INDEX

CONTENTS

SH. NO.		REVISION NO. 1	2	3	4	5	6	7	8	9
I01	TITLE, NOTES, INDEX AND REVISIONS	X	X	⊘	⊠					
I02	TITLE, NOTES, INDEX AND REVISIONS	X	X	⊘	⊠					
I03	TITLE, NOTES, INDEX AND REVISIONS			⊘	⊠					
S01	TRACK AND SIGNAL PLAN	X	X	⊘						
S05 S02	TRACK AND SIGNAL PLAN	X	X	⊘						
S02	TRACK AND SIGNAL PLAN			⊘						
S06 S03	TRACK AND SIGNAL PLAN	X	X	⊘						
S03	TRACK AND SIGNAL PLAN			⊘						
S04	TRACK AND SIGNAL PLAN			⊘						
G01	VHLC I/O EQUIVALENT CIRCUITS (LOCATION A)	X	X							
G02	OFFICE CONTROL AND INDICATION EQUIVALENT CIRCUITS (LOCATION A)	X	X							
G03	VHLC I/O EQUIVALENT CIRCUITS (LOCATION B)	X	X	⊘						
G04	VHLC I/O EQUIVALENT CIRCUITS (LOCATION C)	X	X							
G05	INDICATION EQUIVALENT CIRCUITS (LOCATION C)	X	X							
E01	POWER DISTRIBUTION (LOCATION A)	X	X							
E02	RACK 1 LAYOUT (LOCATION A)	X	X							
E03	RACK 2 LAYOUT (LOCATION A)	X	X	⊘						
E04	CUSTOM LOCAL CONTROL PANEL AND DATA RADIO (LOCATION A)	X	X							
E05	POWER DISTRIBUTION (LOCATION B)	X	X	⊘						
E06	RACK 1 LAYOUT (LOCATION B)	X	X	⊘						
E07	POWER DISTRIBUTION (LOCATION C)	X	X							
E08	RACK 1 LAYOUT (LOCATION C)	X	X							
E09	RACK 2 LAYOUT (LOCATION C)	X	X							
E10	LCP I/O CARD LAYOUT (LOCATION C)	X	X							
E11	POWER DISTRIBUTION (4' X 4' RELAY HOUSE)	X	X							
E11	POWER DISTRIBUTION 6' X 6' (LOCATION D)			⊘						
E12	ELECTROLOGIXS MODULE XP4 CONFIGURATION (LOCATION D)			⊘						
E13	ACCESS POINT INET-II 900 RADIO DETAILS (LOCATION D)			⊘						
E14	POWER DISTRIBUTION (LOCATION E)			⊘						
E15	ELECTROLOGIXS MODULE XP4 CONFIGURATION (LOCATION E)			⊘						
E15	ELECTROLOGIXS MODULE XP4 CONFIGURATION (LOCATION E)				⊠					
E16	ACCESS POINT INET-II 900 RADIO DETAILS (LOCATION E)			⊘						
E17	POWER DISTRIBUTION (LOCATION F)			⊘						
E18	ELECTROLOGIXS MODULE XP4 CONFIGURATION (LOCATION F)			⊘						
E19	ELECTROLOGIXS MODULE XP4 CONFIGURATION (LOCATION F)			⊘						
E18	ELECTROLOGIXS MODULE XP4 CONFIGURATION (LOCATION F)				⊠					
E19	ELECTROLOGIXS MODULE XP4 CONFIGURATION (LOCATION F)				⊠					
E20	ACCESS POINT INET-II 900 RADIO DETAILS (LOCATION F)			⊘						
E21	POWER DISTRIBUTION (LOCATION G)			⊘						
E22	ELECTROLOGIXS MODULE XP4 CONFIGURATION (LOCATION G)			⊘						
E23	POWER DISTRIBUTION (CROSSING LOCATION 90)			⊘						
E24	ELECTROLOGIXS MODULE XP4 CONFIGURATION (CROSSING LOCATION 90)			⊘						
E25	POWER DISTRIBUTION (CROSSING LOCATION 47)			⊘	⊠					
E26	ELECTROLOGIXS MODULE XP4 CONFIGURATION (CROSSING LOCATION 47)			⊘						
C01	VHLC CIRCUITS (LOCATION A)	X	X							
C02	VHLC I/O CIRCUITS (LOCATION A)	X	X							
C03	VHLC I/O CIRCUITS (LOCATION A)	X	X							
C04	VHLC INPUT CIRCUITS (LOCATION A)	X	X							

⊘ = PLANS SENT TO FIELD (DISTRIBUTED)
X = PLANS AS-IN-SERVICED (UP TO DATE)

REVISIONS

1	05-27-03 SWE	IL2002032
2	09-28-11 XRL	IL2006016

⊖⊖⊖ = IN
✕✕✕ = OUT

PORTION OF MARK-UP
DATED 08-25-12

THIS PLAN ☐ DOES ☒ DOES NOT
SUPERSEDES PLANS DATED:

IL2011037 / 08-25-12

⊟⊟⊟ = IN
✱✱✱ = OUT

GE TRANSPORTATION
INTELLIGENT CONTROL SYSTEMS
Jacksonville, Florida
CSX PROJ #:IL2011037A DATE:01-29-13
DESIGNED BY:SAT CHECKED BY:DPL

CSX TRANSPORTATION
RAIL TRANSPORT GROUP ENGINEERING
COMMUNICATIONS AND SIGNALS

B.I. JUNCTION

TITLE, NOTES, INDEX & REVISIONS
ALSIP, IL M.P. DC-15.04

DESIGNED	DIGITIZED	CHECKED	DATE
SWE/STL	SWE/WLA	SWE/MJH/JLM	10-14-02

NEXT FILE	NEXT SH	FILE	SHEET
DC01504	I02	DC01504	I01

INDEX

CONTENTS

SH. NO.	CONTENTS	REVISION NO. 1	2	3	4	5	6	7	8	9
C05	SIGNAL LIGHTING CIRCUITS (LOCATION A)	X	X							
C06	SIGNAL LIGHTING CIRCUITS (LOCATION A)	X	X							
C07	SIGNAL LIGHTING CIRCUITS (LOCATION A)	X	X							
C08	SIGNAL LIGHTING CIRCUITS (LOCATION A)	X	X							
C09	SIGNAL LIGHTING CIRCUITS (LOCATION A)	X	X							
C10	SWITCH CIRCUITS (LOCATION A)	X	X							
C11	SWITCH CIRCUITS (LOCATION A)	X	X							
C12	SWITCH CIRCUITS (LOCATION A)	X	X							
C13	SWITCH CIRCUITS (LOCATION A)	X	X							
C14	WAGO TERMINAL BOARDS (LOCATION A)	X	X							
C15	VHLC CHECKSUMS (LOCATION A)	X	X							
C16	CUSTOM LOCAL CONTROL PANEL LAYOUT (LOCATION A)	X	X							
C17	CUSTOM LOCAL CONTROL PANEL CIRCUITS (LOCATION A)	X	X							
C18	CUSTOM LOCAL CONTROL PANEL CIRCUITS (LOCATION A)	X	X							
C19	CUSTOM LOCAL CONTROL PANEL CIRCUITS (LOCATION A)	X	X							
C20	CUSTOM LOCAL CONTROL PANEL CIRCUITS (LOCATION A)	X	X							
C21	G.T.W.R.R. TIE-IN CIRCUITS (LOCATION A / LOCATION 8)	X	X							
C22	VHLC CIRCUITS (LOCATION B)	X	X	Ø						
C23	VHLC I/O CIRCUITS (LOCATION B)	X	X	Ø						
C24	VHLC I/O CIRCUITS (LOCATION B)	X	X	Ø						
C25	SIGNAL LIGHTING CIRCUITS (LOCATION B)	X	X							
C26	SIGNAL LIGHTING CIRCUITS (LOCATION B)	X	X							
C27	WAGO TERMINAL BOARDS (LOCATION B)	X	X	Ø						
C28	VHLC CHECKSUMS (LOCATION B)	X	X							
C29	VHLC FACE PLATE (LOCATION B)	X	X							
C30	G.T.W.R.R. XING CIRCUITS (LOCATION B)	X	X							
C30 C31	VHLC CIRCUITS (LOCATION C)	X	X	Ø						
C31 C32	VHLC I/O CIRCUITS (LOCATION C)	X	X	Ø						
C32 C33	VHLC I/O CIRCUITS (LOCATION C)	X	X	Ø						
C33 C34	SIGNAL LIGHTING CIRCUITS (LOCATION C)	X	X	Ø						
C34 C35	SIGNAL LIGHTING CIRCUITS (LOCATION C)	X	X	Ø						
C35 C36	SIGNAL LIGHTING CIRCUITS (LOCATION C)	X	X	Ø						
C36 C37	SIGNAL LIGHTING CIRCUITS (LOCATION C)	X	X	Ø						
C37 C38	WAGO TERMINAL BOARDS (LOCATION C)	X	X	Ø						
C38 C39	VHLC CHECKSUMS (LOCATION C)	X	X	Ø						
C39 C40	VHLC FACE PLATE (LOCATION C)	X	X	Ø						
C40 C41	LOCAL CONTROL PANEL (LOCATION C)	X	X	Ø						
C41 C42	G.T.W.R.R. TIE-IN CIRCUITS (LOCATION C/4'-11" CASE)	X	X	Ø						
C43	PSO II OVERLAY CIRCUITS (4'X4' XING OVERLAY HOUSE) BROADWAY ST.	X	X							
C42	10-1CWU ELECTROLOGIXS CIRCUITS (LOCATION D)				Ø					
C43	XP4 10CWU-1 MODULE SETUP INFORMATION (LOCATION D)				Ø					
C44	XP4 10-1CWU MODULE CONNECTOR USAGE (LOCATION D)				Ø					
C45	XP4 SIGNAL A CROSSING SIGNAL CONTROL CIRCUITRY (LOCATION D)				Ø					
C46	CROSSING WARNING DEVICE CIRCUITRY (LOCATION D)									
C47	CROSSING WARNING DEVICE LIGHT CIRCUITRY (LOCATION D)				Ø					

X = PLANS SENT TO FIELD (DISTRIBUTED)

X = PLANS AS-IN-SERVICED (UP TO DATE)

REVISIONS

1	05-27-03 SWE	IL2002032
2	09-28-11 XRL	IL2006016

= IN

= OUT

GE TRANSPORTATION
INTELLIGENT CONTROL SYSTEMS
Jacksonville, Florida
CSX PROJ #: IL2011037A DATE: 01-29-13
DESIGNED BY: SAT CHECKED BY: DPL

CSX TRANSPORTATION
RAIL TRANSPORT GROUP ENGINEERING
COMMUNICATIONS AND SIGNALS

B.I. JUNCTION

TITLE, NOTES, INDEX & REVISIONS
ALSIP, IL M.P. DC-15.04

DESIGNED	DIGITIZED	CHECKED	DATE
SWE/STL	SWE/WLA	SWE/MJH/JLM	10-14-02

NEXT FILE	NEXT SH	FILE	SHEET
DC01504	S01	DC01504	102

INDEX

SH. NO.	CONTENTS	REVISION NO. 1	2	3	4	5	6	7	8	9
C48	10-2CWU ELECTROLOGIXS CIRCUITS (LOCATION E)				Ø					
C49	XP4 10CWU-2 MODULE SETUP CONFIGURATION (LOCATION E)				Ø					
C50	XP4 10-2CWU MODULE CONNECTOR USAGE (LOCATION E)				Ø					
C51	10CWU-3 ELECTROLOGIXS XP4 CIRCUITS (LOCATION F)									
C52	XP4 10CWU-4 MODULE SETUP INFORMATION (LOCATION F)				Ø					
C53	XP4 MODULE CONNECTOR USAGE (LOCATION F)				Ø					
C54	10CWU-4 ELECTROLOGIXS XP4 CIRCUITS (LOCATION F)									
C55	XP4 10CWU-3 MODULE SETUP INFORMATION (LOCATION F)				Ø					
C56	XP4 MODULE CONNECTOR USAGE (LOCATION F)				Ø					
C57	XP4 SIGNAL C CROSSING SIGNAL CONTROL CIRCUITRY (LOCATION F)									
C58	XP4 CROSSING GATE CIRCUITRY - S60 (LOCATION F)				Ø					
C59	CROSSING WARNING DEVICE LIGHT CIRCUITRY (LOCATION F)									
C60	10-5CWU ELECTROLOGIXS CIRCUITS (LOCATION G)									
C61	XP4 10CWU-5 MODULE SETUP INFORMATION (LOCATION G)				Ø					
C62	XP4 10-5CWU MODULE CONNECTOR USAGE (LOCATION G)									
C63	XP4 SIGNAL A CROSSING SIGNAL CONTROL CIRCUITRY (LOCATION G)				Ø					
C64	XP4 SIGNAL B CROSSING SIGNAL CONTROL CIRCUITRY (LOCATION G)				Ø					
C65	CROSSING WARNING DEVICE GATE CIRCUITRY (LOCATION G)				Ø					
C66	CROSSING WARNING DEVICE LIGHT CIRCUITRY (LOCATION G)									
C67	90CWU ELECTROLOGIXS XP4 CIRCUITS (LOCATION 90)									
C68	XP4 90CWU MODULE SETUP INFORMATION (LOCATION 90)									
C69	XP4 90CWU MODULE CONNECTOR USAGE (LOCATION 90)									
C70	47CWU ELECTROLOGIXS XP4 CIRCUITS (LOCATION 47)									
C71	XP4 47CWU MODULE SETUP INFORMATION (LOCATION 47)									
C72	XP4 47CWU MODULE CONNECTOR USAGE (LOCATION 47)				Ø					

= PLANS SENT TO FIELD (DISTRIBUTED)

= PLANS AS-IN-SERVICED (UP TO DATE)

REVISIONS

= IN

= OUT

GE TRANSPORTATION
INTELLIGENT CONTROL SYSTEMS
Jacksonville, Florida
CSX PROJ #, IL2011037A DATE, 01-29-13
DESIGNED BY, SAT CHECKED BY, DPL

CSX TRANSPORTATION
RAIL TRANSPORT GROUP ENGINEERING
COMMUNICATIONS AND SIGNALS

B.I. JUNCTION
BROADWAY ST. (163416P)
TITLE, NOTES, INDEX & REVISIONS
ALSIP, IL M.P. DC-15.04

DESIGNED	DIGITIZED	CHECKED	DATE
GET/DLK	GET/SAT	GET/FAP	08-25-12

NEXT FILE	NEXT SH	FILE	SHEET
DC01504	S01	DC01504	103

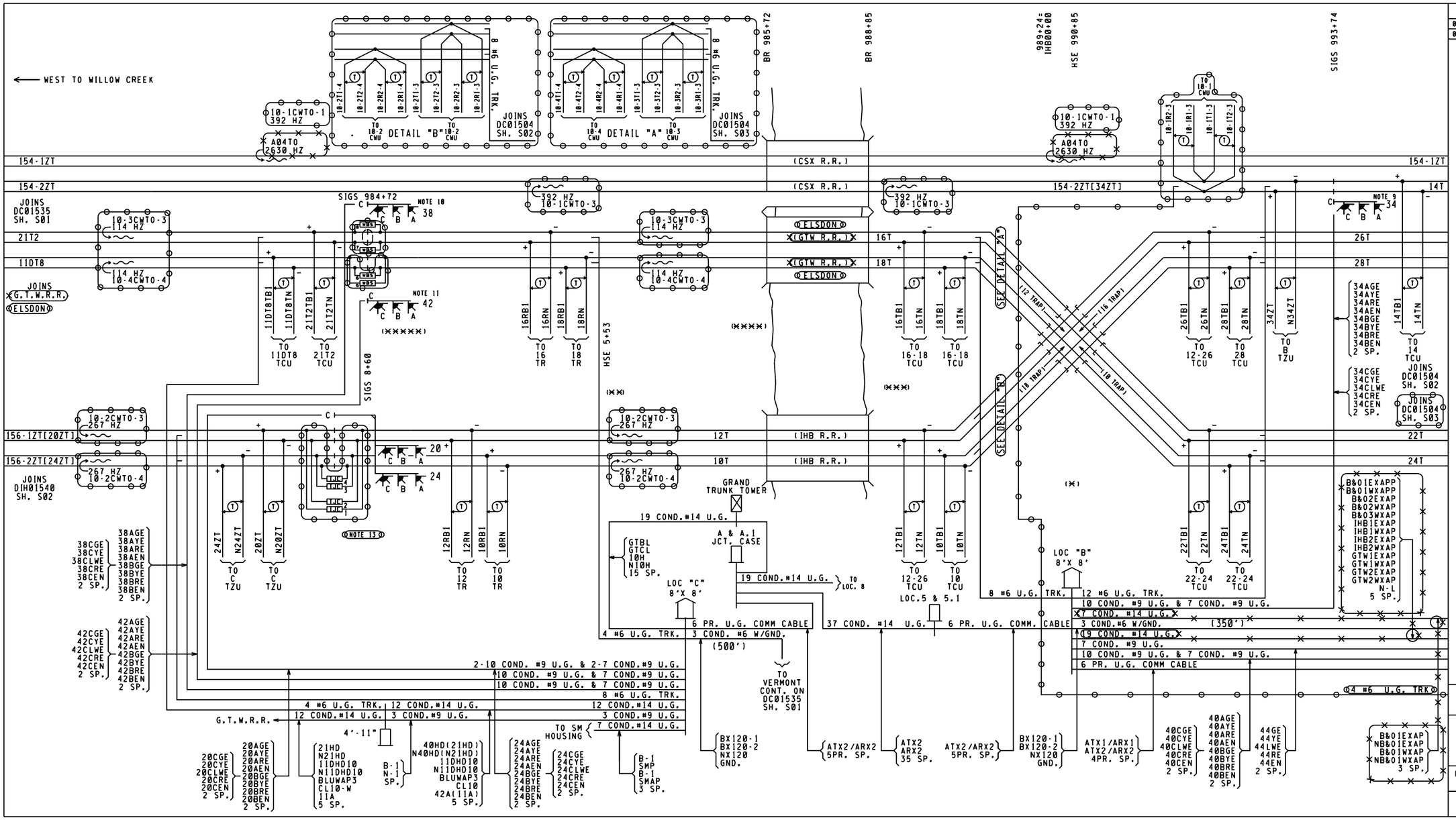

REVISIONS

05-27-03 SWE	IL2002032
09-28-11 XRL	IL2006016

NOTES:

1) (✕) : LOCATION OF LOCATION "B" REMOTE 8'X 8' HOUSE.
2) (✕✕) : LOCATION OF LOCATION "C" REMOTE 8'X 8' HOUSE.
3) (✕✕✕) : LOCATION OF LOCATION 5 & 5.1.
4) (✕✕✕✕) : LOCATION OF BLUE ISLAND TOWER.
5) (✕✕✕✕✕) : LOCATION OF 4'-11" CASE.
6) ( ) : TAGGING PURPOSES ONLY
7) FLASHING ASPECTS ARE NOT SHOWN ON S01, SHOWN ONLY ON ASPECT CHART AND PROFILE.
8) 4 & A.1 JCT CASE LOCATED OUTSIDE OF TOWER.
9) 34 SIGNAL "B" HEAD YELLOW AND "C" HEAD YELLOW ARE BLANKED FOR FUTURE USE.
10) 38 SIGNAL "A" HEAD GREEN/YELLOW, "B" HEAD GREEN/YELLOW AND "C" HEAD GREEN/YELLOW ARE BLANKED FOR FUTURE USE.
11) 42 SIGNAL "B" HEAD GREEN/YELLOW AND "C" HEAD GREEN/YELLOW ARE BLANKED FOR FUTURE USE.
12) 1-4-TJC - IA 210HZ 250491-213
13) 5-8-WBS - IA 114HZ 250491-213

FIELD SET
08/02/13
○○○ : IN
✕✕✕ : OUT

GE TRANSPORTATION
INTELLIGENT CONTROL SYSTEMS
Jacksonville, Florida
CSX PROJ #: IL2011037A DATE: 01-29-13
DESIGNED BY: SAT CHECKED BY: DPL

CSX TRANSPORTATION
RAIL TRANSPORT GROUP ENGINEERING
COMMUNICATIONS AND SIGNALS

B.I. JUNCTION

TRACK AND SIGNAL PLAN
ALSIP, IL M.P. DC-15.04

DESIGNED	DIGITIZED	CHECKED	DATE
SWE/STL	SWE/WLA	SWE/MJH/JLM	10-14-02
NEXT FILE	NEXT SH	FILE	SHEET
DC01504	S02	DC01504	S01

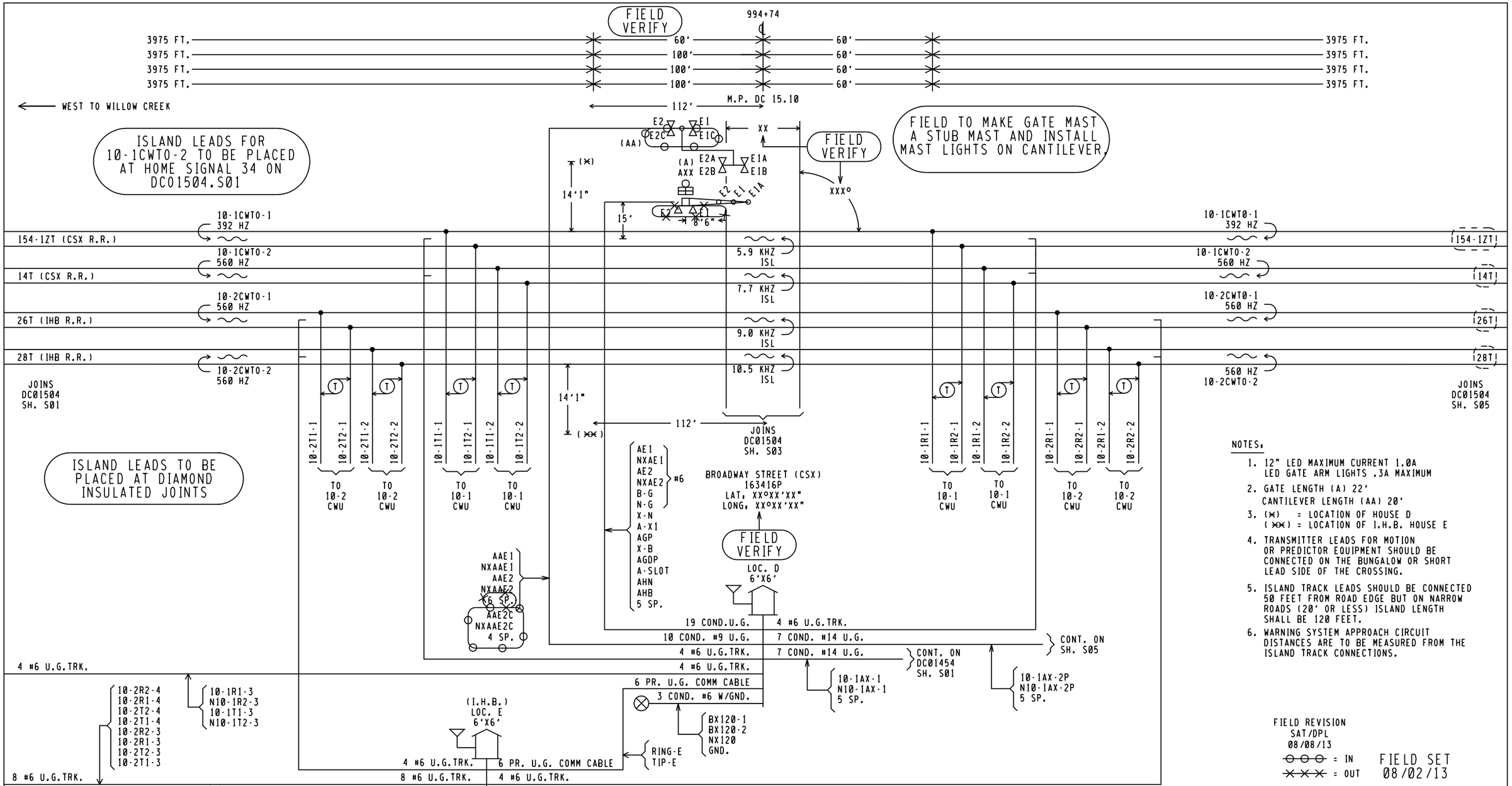

NOTES.

1. 12" LED MAXIMUM CURRENT 1.0A
   LED GATE ARM LIGHTS .3A MAXIMUM
2. GATE LENGTH (A) 22'
   CANTILEVER LENGTH (AA) 20'
3. (✕) = LOCATION OF HOUSE D
   (✕✕) = LOCATION OF I.H.B. HOUSE E
4. TRANSMITTER LEADS FOR MOTION OR PREDICTOR EQUIPMENT SHOULD BE CONNECTED ON THE BUNGALOW OR SHORT LEAD SIDE OF THE CROSSING.
5. ISLAND TRACK LEADS SHOULD BE CONNECTED 50 FEET FROM ROAD EDGE BUT ON NARROW ROADS (20' OR LESS) ISLAND LENGTH SHALL BE 120 FEET.
6. WARNING SYSTEM APPROACH CIRCUIT DISTANCES ARE TO BE MEASURED FROM THE ISLAND TRACK CONNECTIONS.

FIELD REVISION
SAT/DPL
08/08/13

⊖⊖⊖ = IN
✕✕✕ = OUT
( ) = NOTE

FIELD SET
08/02/13

BROADWAY STREET OPERATION TO BE AS FOLLOWS.
ANY TRAIN MOVEMENT ON CSX MAIN 1&2,
IHB MAIN 1&2, ELSDON 1&2, OR CSX#8 TRACKS,
-- FRONT LIGHTS OF GATES A&B AND BACK LIGHTS OF C&D FLASH, BELLS RING
AFTER GATE DELAY, GATES A AND B DESCEND
AFTER ADJACENT CLEARANCE TIMER OF 12 SECONDS COMPLETES, FRONT LIGHTS OF C AND BACK LIGHTS OF A FLASH
AFTER GATE DELAY, GATE C DESCENDS

ANY TRAIN MOVEMENT ON CSX #9 TRACK,
-- FRONT LIGHTS OF GATES A&B AND BACK LIGHTS OF C&D FLASH, BELLS RING
AFTER GATE DELAY, GATES A AND B DESCEND
AFTER ADJACENT CLEARANCE TIMER OF 18 SECONDS COMPLETES, FRONT LIGHTS OF D AND BACK LIGHTS OF B FLASH
AFTER GATE DELAY, GATE D DESCENDS

SPEEDS THROUGH BROADWAY STREET

CSX 1&2	CSX 1&2	CN 1&2	CN 1&2	IHB1&2	IHB 1&2	CN & CSX 8	CSX 9
30	30	40	40	40	40	15	15

2TRKPMD3CPML.S01
REV. 09-30-10

NEW WORK

GE TRANSPORTATION
INTELLIGENT CONTROL SYSTEMS
Jacksonville, Florida
CSX PROJ #. IL2011037A DATE. 01-29-13
DESIGNED BY. SAT CHECKED BY. DPL

CSX TRANSPORTATION
RAIL TRANSPORT GROUP ENGINEERING
COMMUNICATIONS AND SIGNALS

B.I. JUNCTION
BROADWAY ST. (163416P)
TRACK AND SIGNAL PLAN
ALSIP, IL M.P. DC-15.04

DESIGNED	DIGITIZED	CHECKED	DATE
GET/DLK	GET/SAT	GET/FAP	08-25-12

DESIGN DATE	REV. NO.	DRAWING	SHEET NO	FILE	SHEET
08-25-12	3	-----	-----	DC01504	S02 (X ✕)

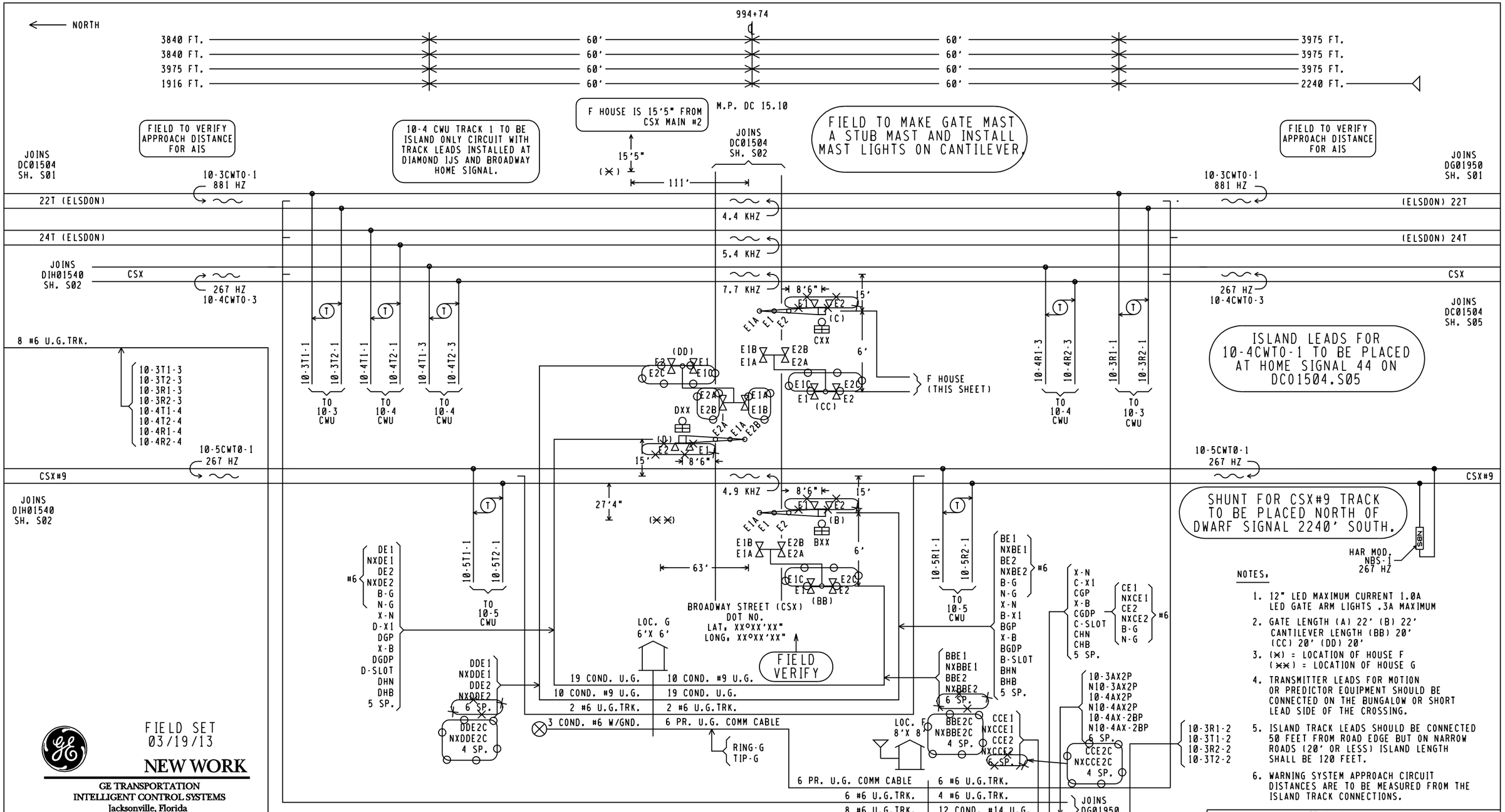

NOTES.

1. 12" LED MAXIMUM CURRENT 1.0A LED GATE ARM LIGHTS .3A MAXIMUM
2. GATE LENGTH (A) 22' (B) 22' CANTILEVER LENGTH (BB) 20' (CC) 20' (DD) 20'
3. (✕) = LOCATION OF HOUSE F (✕✕) = LOCATION OF HOUSE G
4. TRANSMITTER LEADS FOR MOTION OR PREDICTOR EQUIPMENT SHOULD BE CONNECTED ON THE BUNGALOW OR SHORT LEAD SIDE OF THE CROSSING.
5. ISLAND TRACK LEADS SHOULD BE CONNECTED 50 FEET FROM ROAD EDGE BUT ON NARROW ROADS (20' OR LESS) ISLAND LENGTH SHALL BE 120 FEET.
6. WARNING SYSTEM APPROACH CIRCUIT DISTANCES ARE TO BE MEASURED FROM THE ISLAND TRACK CONNECTIONS.

FIELD SET
03/19/13

NEW WORK

GE TRANSPORTATION
INTELLIGENT CONTROL SYSTEMS
Jacksonville, Florida
CSX PROJ #: IL2011037A DATE: 01-29-13
DESIGNED BY: SAT CHECKED BY: DPL

SPEEDS THROUGH BROADWAY STREET

CSX 1&2	CSX 1&2	CN 1&2	CN 1&2	IHB1&2	IHB 1&2	CN & CSX 8	CSX 9
30	30	40	40	40	40	15	15

BROADWAY STREET OPERATION TO BE AS FOLLOWS:
ANY TRAIN MOVEMENT ON CSX MAIN 1&2, IHB MAIN 1&2, ELSDON 1&2, OR CSX#8 TRACKS:
-- FRONT LIGHTS OF GATES A&B AND BACK LIGHTS OF C&D FLASH, BELLS RING AFTER GATE DELAY, GATES A AND B DESCEND AFTER ADJACENT CLEARANCE TIMER OF 12 SECONDS COMPLETES, FRONT LIGHTS OF C AND BACK LIGHTS OF A FLASH AFTER GATE DELAY, GATE C DESCENDS

ANY TRAIN MOVEMENT ON CSX #9 TRACK:
-- FRONT LIGHTS OF GATES A&B AND BACK LIGHTS OF C&D FLASH, BELLS RING AFTER GATE DELAY, GATES A AND B DESCEND AFTER ADJACENT CLEARANCE TIMER OF 18 SECONDS COMPLETES, FRONT LIGHTS OF D AND BACK LIGHTS OF B FLASH AFTER GATE DELAY, GATE D DESCENDS

FIELD REVISION
SAT/DPL
08/08/13
= IN
= OUT
= NOTE

2TRKPMD3CPML.S01
REV. 09-30-10

CSX TRANSPORTATION
RAIL TRANSPORT GROUP ENGINEERING
COMMUNICATIONS AND SIGNALS

B.I. JUNCTION
BROADWAY ST. (163416P)
TRACK AND SIGNAL PLAN
ALSIP, IL M.P. DC-15.04

DESIGNED	DIGITIZED	CHECKED	DATE
GET/DLK	GET/SAT	GET/FAP	08-25-12

DESIGN DATE	REV. NO.	DRAWING	SHEET NO	FILE	SHEET
08-25-12	3	-----	-----	DC01504	S03 (X)

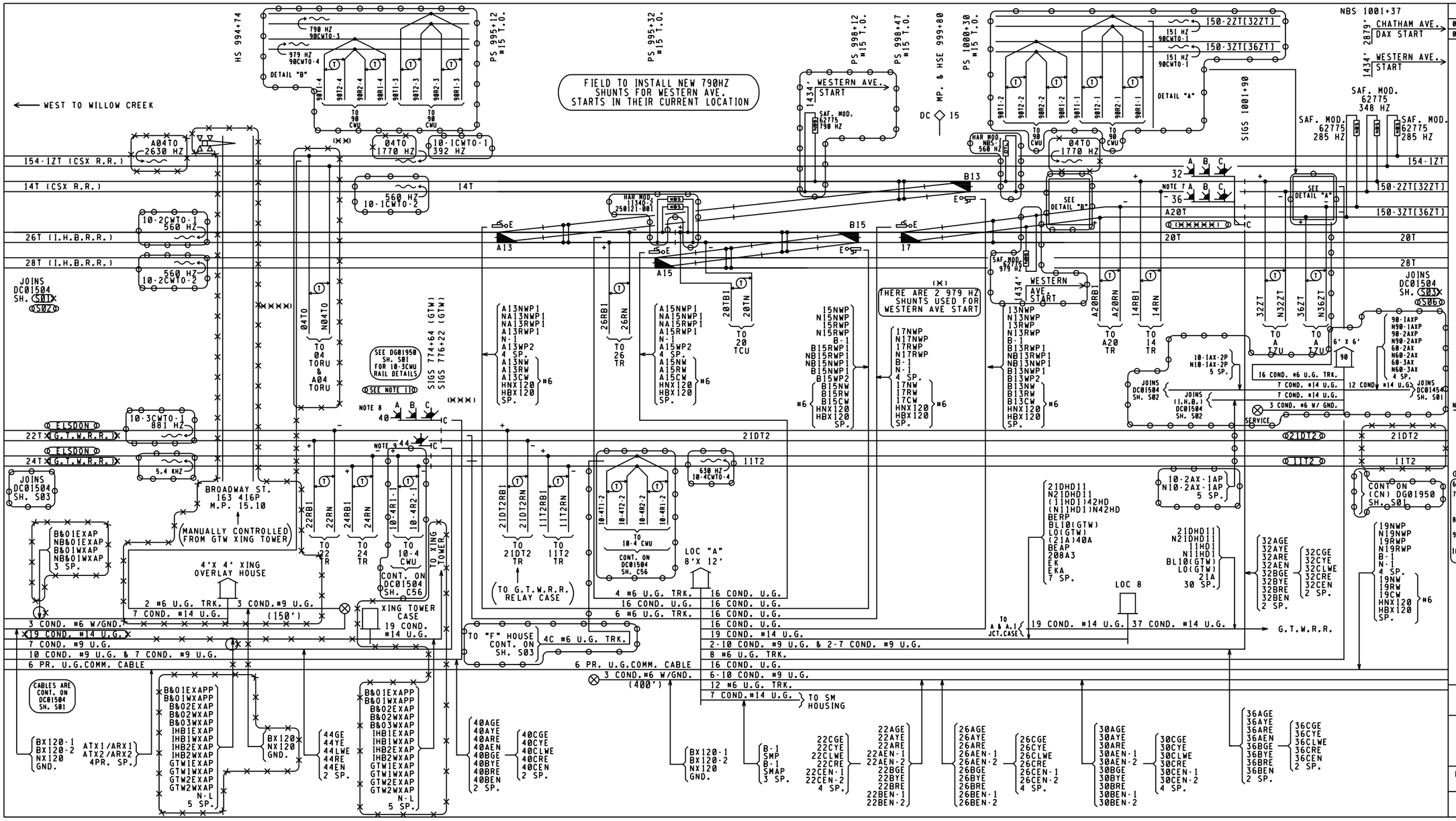

REVISIONS	
05-27-03 SWE	IL2002032
09-28-11 XRL	IL2006016

FIELD TO VERIFY SHUNTS & DTL'S AT IJ'S.

NOTES,

1) (✱) : LOCATION OF LOCATION "B" REMOTE 8'X 8' HOUSE.
2) (✱✱) : LOCATION OF LOCATION "C" REMOTE 8'X 8' HOUSE.
3) (✱✱✱) : LOCATION OF LOCATION 5 & 5.1.
4) (✱✱✱✱) : LOCATION OF BLUE ISLAND TOWER.
5) (✱✱✱✱✱) : LOCATION OF XING HOUSE
6) [ ] : TAGGING PURPOSE ONLY .
7) FLASHING ASPECTS ARE NOT SHOWN ON S02, SHOWN ONLY ON ASPECT CHART AND PROFILE.
8) 36 SIGNAL "A" HEAD GREEN/YELLOW, ARE BLANKED FOR FUTURE USE.
9) 40 SIGNAL "B" HEAD GREEN/YELLOW AND "C" HEAD GREEN/YELLOW ARE BLANKED FOR FUTURE USE.
10) 44 SIGNAL GREEN/YELLOW ARE BLANKED FOR FUTURE USE.
11) DUMMY LOAD FOR 881HZ TRACK 1 SHOWN ON CSX (CN) DG01950.S01 PLANS.

FIELD SET 08/02/13

○○○ : IN
✱✱✱ : OUT

GE TRANSPORTATION
INTELLIGENT CONTROL SYSTEMS
Jacksonville, Florida
CSX PROJ #, IL2011037A DATE, 01-29-13
DESIGNED BY, SAT CHECKED BY, DPL

CSX TRANSPORTATION
RAIL TRANSPORT GROUP ENGINEERING COMMUNICATIONS AND SIGNALS

B.I. JUNCTION

TRACK AND SIGNAL PLAN
ALSIP, IL M.P. DC-15.04

DESIGNED	DIGITIZED	CHECKED	DATE
SWE/STL	SWE/WLA	SWE/MJH/JLM	10-14-02
NEXT FILE	NEXT SH	FILE	SHEET
DC01504	S03	DC01504	S02

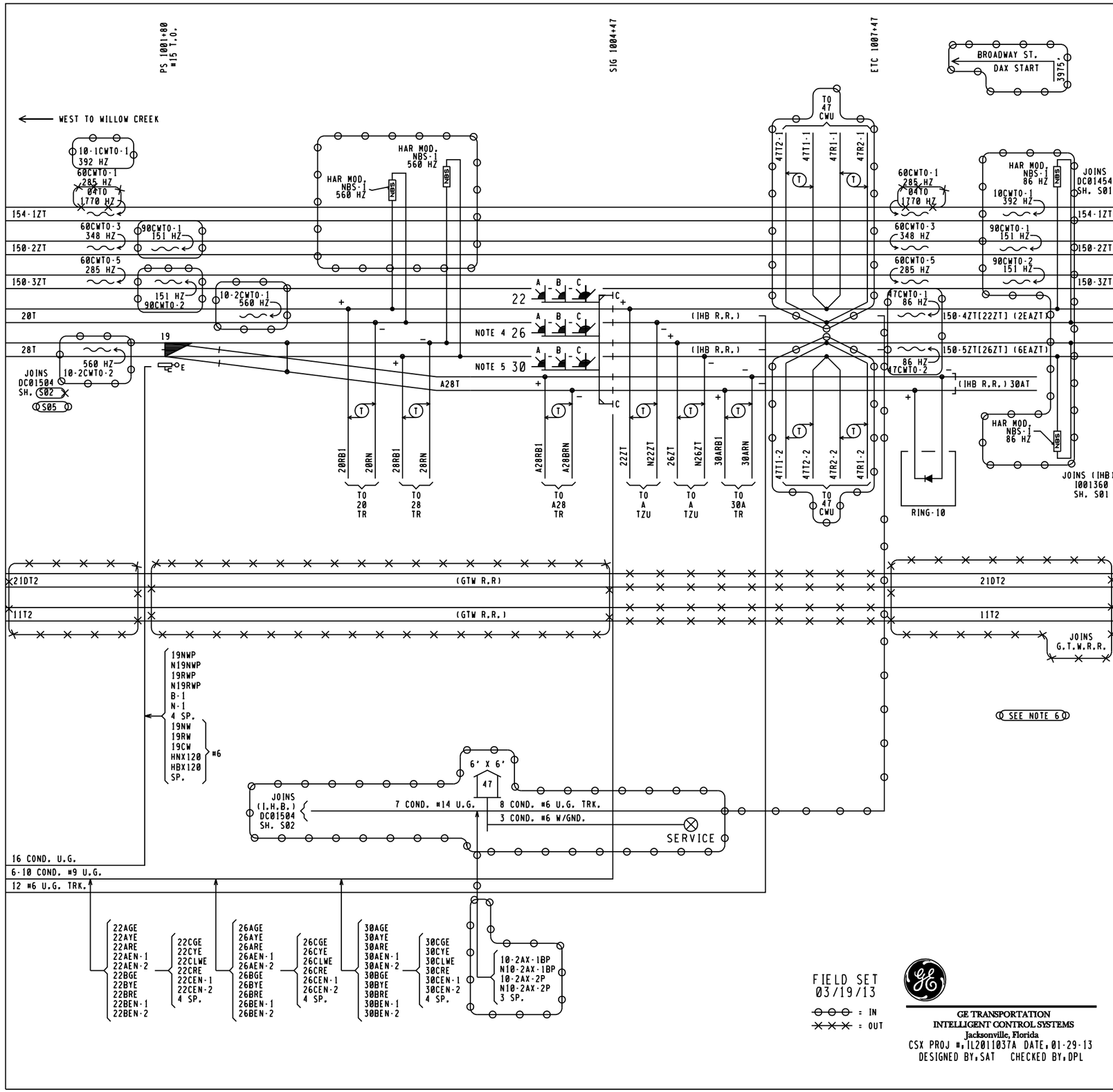

FIELD SET
03/19/13

= IN
= OUT

GE TRANSPORTATION
INTELLIGENT CONTROL SYSTEMS
Jacksonville, Florida
CSX PROJ #,IL2011037A DATE,01-29-13
DESIGNED BY,SAT CHECKED BY,DPL

REVISIONS	
05-27-03 SWE	IL2002032
09-28-11 XRL	IL2006016

NOTES,

1) [ ] = TAGGING PURPOSE ONLY
2) FLASHING ASPECTS ARE NOT SHOWN ON S03, SHOWN ONLY ON ASPECT CHART AND PROFILE.
3) ( )= EXISTING TRACK NOMENCLATURE USED AT HARVEY.
4) 26 SIGNAL "B" HEAD YELLOW AND "C" HEAD GREEN/YELLOW ARE BLANKED. (FUTURE USE)
5) 30 SIGNAL "A" HEAD GREEN AND YELLOW, ARE BLANKED. (FUTURE USE)
6) TRACKS NOW CONTINUE ON DG01950. S01

CSX TRANSPORTATION
RAIL TRANSPORT GROUP ENGINEERING
COMMUNICATIONS AND SIGNALS

B.I. JUNCTION

TRACK AND SIGNAL PLAN
ALSIP, IL M.P. DC-15.04

DESIGNED	DIGITIZED	CHECKED	DATE
SWE/STL	SWE/GBT	SWE/MJH/JLM	10-14-02

NEXT FILE	NEXT SH	FILE	SHEET
DC01504	G01	DC01504	S03

S06

RACK	CARD NO.	CODED CIRCUIT INTERFACE OUTPUTS 1	2	3	4	5	6	7	8
1	F4	34ZT	UNUSED	UNUSED	UNUSED	UNUSED	UNUSED	UNUSED	UNUSED

SPARE SPARE SPARE SPARE SPARE

RACK	CARD NO.	VITAL SIGNAL LAMP DRIVER OUTPUT BITS 1	2	3	4	5	6	7	8	9	10	11	12	13	14	15	16	SIG STOP	VITAL GENERAL PURPOSE I/O BITS — OUTPUTS 1	2	3	4	5	6	7	8	INPUTS 1	2	3	4	5	6	7	8
1	F5																		IHB 1EXAR	IHB 2EXAR	IHB 1WXAR	IHB 2WXAR	B&O 2EXAR	B&O 2WXAR	SPARE	SPARE	SPARE	SPARE	SPARE	SPARE	SPARE	SPARE	SPARE	BPOPR
	F6																		B&O 3WXAR	GTW 1EXAR	GTW 2EXAR	GTW 1WXAR	GTW 2WXAR	SPARE	SPARE	SPARE	SPARE	SPARE	SPARE	SPARE	SPARE	SPARE	SPARE	SPARE
	F7																		SPARE	SPARE	SPARE	SPARE	SPARE											
	F8																																	
	F9																																	
	F10																																	
	F11	40AGE	40AYE	40ARE	SPARE	SPARE	40BRE	SPARE	SPARE	40CLWE	40CRE	SPARE	SPARE	44LWE	44RE	SPARE	SPARE	11V STOP																
	F12	34AGE	34AYE	34ARE	34BGE	SPARE	34BRE	34CGE	SPARE	34CLWE	34CRE	SPARE	SPARE	SPARE	SPARE	SPARE	SPARE	12V STOP																

THE FOLLOWING LOGGING SHOULD BE SET-UP

1. DATE & TIME
2. MEMORY LOG ENABLES
   - 0. CONTROL / INDICATION OFF
   - 1. GENISYS PROTOCOL OFF
   - 2. CODE LINE MONITOR OFF
   - 3. SHARED RAM ERRORS OFF
   - 4. CCI INFORMATION OFF
   - 5. CCI ERRORS ON
   - 6. I/O ERRORS ON
   - 7. I/O MESSAGES OFF
   - 8. ACP RECORDERS OFF
   - 9. VLP RECORDERS ON
   - 10. LCP I/O OFF
   - 11. TURNED OFF ALL DIAGNOSTIC PORT LOGGING
3. DIAGNOSTIC PORT LOG ENABLES
   - 0. CONTROL / INDICATION OFF
   - 1. GENISYS PROTOCOL OFF
   - 2. CODE LINE MONITOR OFF
   - 3. SHARED RAM INFORMATION OFF
   - 4. SHARED RAM ERRORS OFF
   - 5. CCI INFORMATION OFF
   - 6. CCI ERRORS ON
   - 7. I/O ERRORS ON
   - 8. I/O MESSAGES ON
   - 9. ACP RECORDERS ON
   - 10. VLP RECORDERS ON
   - 11. LCP INPUTS OFF

SETUP INFORMATION

- 0. ENTER ACP SETUP INFORMATION
- 1. DISPLAY ACP SETUP INFORMATION
- 2. DISPLAY VLP SETUP INFORMATION

ACP>0

GENERAL INFORMATION

CONSOLE PORT SETUP, BAUD 9600 PARITY NONE DATA BITS 8
AUX. CONSOLE PORT SETUP, DISABLED

UNIT ADDRESS	1
LCP I/O MODULES	0
INDICATION WORDS	1
INDICATION DELAY	0.0
LINE BAUD	0
LINE STOP BITS	1
LINE PARITY	NONE
CONSTANT INDICATION	OFF
EQUATION STABILITY COUNT	5
TRANSMIT DELAY VALUE	50 MS
TRANSMIT CUTOFF VALUE	20 MS
REMOTE 1 MODULE TYPE	MODEM
PASSWORD	HARMON
MEMORY LOG QUEUES I/O	45
MEMORY LOG QUEUES RECORDED	45
MEMORY LOG QUEUES ERRORS	10

VHLC - LED INDICATIONS (VLP BOARD)			
VLPB	DS4	16	A-BLINK
		15	
		14	
		13	
	DS3	12	
		11	
		10	
		9	
VLPA	DS6	8	
		7	44LOPR
		6	40CLOPR
		5	40BLOPR
	DS5	4	40ALOPR
		3	34CLOPR
		2	34BLOPR
		1	34ALOPR

~~OOO~~ = IN
~~XXX~~ = OUT

GE TRANSPORTATION
INTELLIGENT CONTROL SYSTEMS
Jacksonville, Florida
CSX PROJ #:IL2011037 DATE:08-25-12
DESIGNED BY:DLK CHECKED BY:FAP

LOCATION B

REVISIONS	
05-27-03 SWE	IL2002032
09-28-11 XRL	IL2006016

CSX TRANSPORTATION
RAIL TRANSPORT GROUP ENGINEERING
COMMUNICATIONS AND SIGNALS

B.I. JUNCTION

VHLC I/O EQUIVALENT CIRCUITS
ALSIP, IL M.P. DC-15.04

DESIGNED	DIGITIZED	CHECKED	DATE
SWE/STL	SWE/WLA	SWE/MJH/JLM	10-14-02

NEXT FILE	NEXT SH	FILE	SHEET
DC01504	G04	DC01504	G03

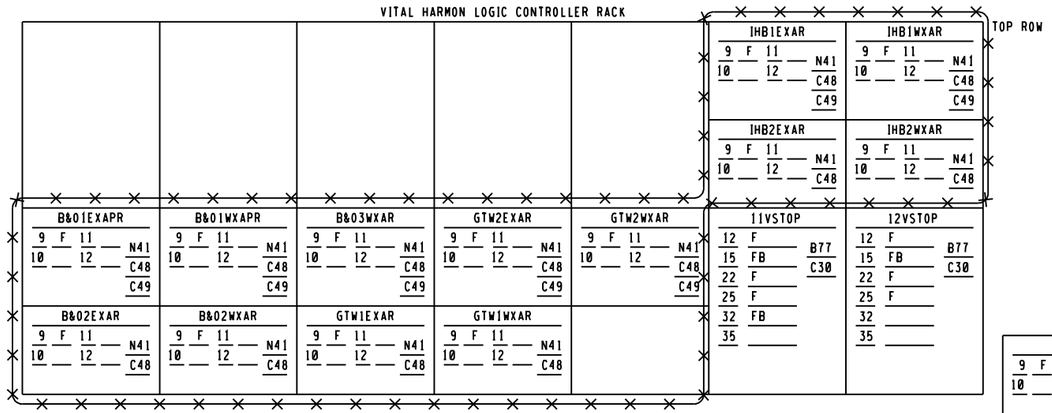

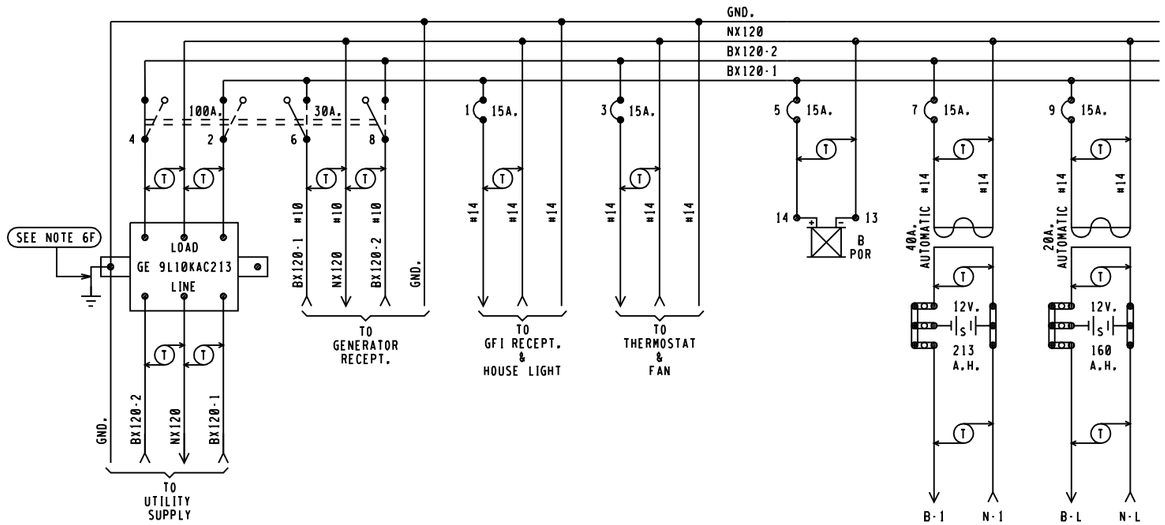

BX120-1	BX120-2
10.6 AMPS	14 AMPS

MAXIMUM LOAD CALCULATED PER SS360

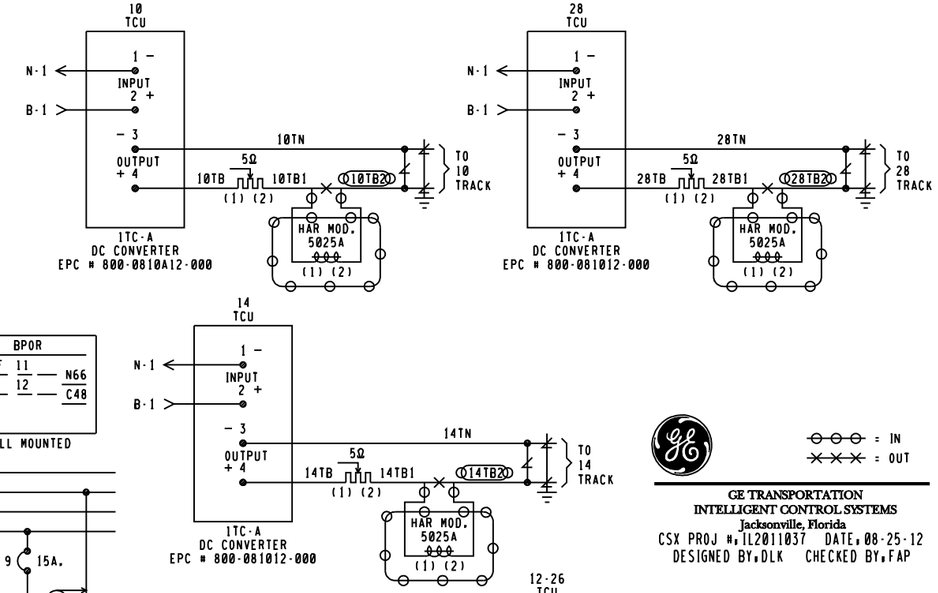

GE TRANSPORTATION
INTELLIGENT CONTROL SYSTEMS
Jacksonville, Florida
CSX PROJ #, IL2011037 DATE, 08-25-12
DESIGNED BY, DLK CHECKED BY, FAP

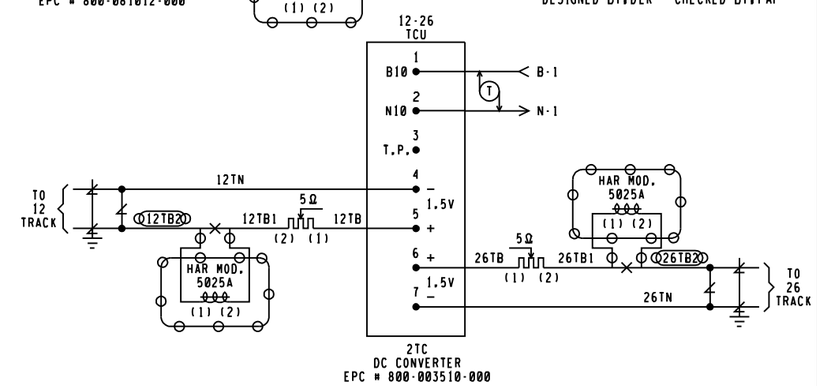

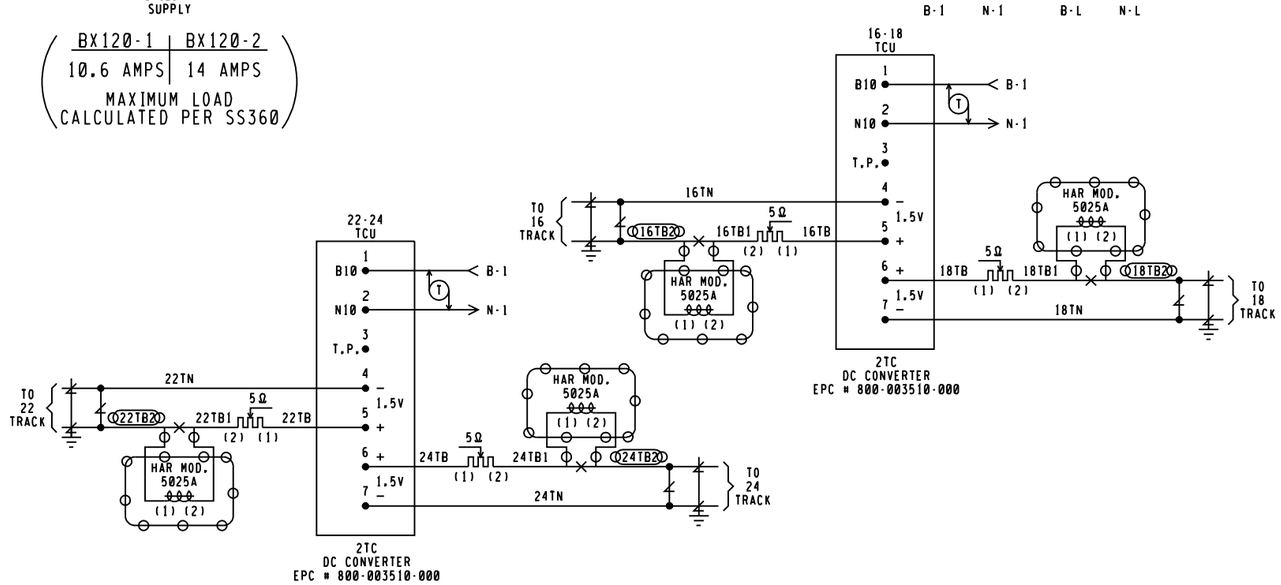

NOTES,

1 - REFERENCES ARE PER SCMS-13.
2 - ARRESTERS ARE PER SS382.
3 - SHELF RELAY PLACEMENT ON CONSIST CHART HAS NO SIGNIFICANCE.
4 - PLUG-IN RELAYS ARE VIEWED FROM THE FRONT OF RACK.
5 - BATTERY A.H. CAPACITY SHOWN IS THE MINIMUM REQUIREMENT.
6 - WIRING
  A - FEED TO ALL BUSSES, LIGHT CIRCUITS, MOTOR CIRCUITS TO BE #10 FLEX.
  B - 120-VOLT FEED FROM ENTRANCE TO POWER BUSS TO BE #10 FLEX.
  C - ALL TRACK WIRES TO BE #10 FLEX.
  D - ALL OTHERS TO BE #16 FLEX UNLESS NOTED.
  E - BATTERY OUTPUTS TO BE #6 TWISTED PAIR PER SS360.
  F - GROUND WIRE NOT NECESSARY WHEN GE ARRESTER IS MOUNTED ON GROUND PLANE OR METAL ENCLOSURE AFFIXED DIRECTLY TO BUNGALOW METALLIC STRUCTURAL MEMBER.
7 - CIRCUIT INTERRUPTERS 2 & 4 ARE MECHANICALLY INTERLOCKED WITH CIRCUIT INTERRUPTERS 6 & 8.

8'X 8' RELAY HOUSE - LOCATION B

REVISIONS	
05-27-03 SWE	IL2002032
09-28-11 XRL	IL2006016

CSX TRANSPORTATION
RAIL TRANSPORT GROUP ENGINEERING
COMMUNICATIONS AND SIGNALS

B.I. JUNCTION

POWER DISTRIBUITION
ALSIP, IL M.P. DC-15.04

DESIGNED	DIGITIZED	CHECKED	DATE
SWE/STL	SWE/WLA	SWE/MJH/JLM	10-14-02
NEXT FILE	NEXT SH	FILE	SHEET
DC01504	E06	DC01504	E05

TOP ROW

POR			10-1AX-1R			10-1AX-2R		
12	FB		12			12		
15	FB	B62	15		B8	15		B8
22	FB	C30	22		C30	22		C30
25	FB		23	F		23	F	
32	F		25	F		25	F	
35			32	F		32	F	
			35			35		

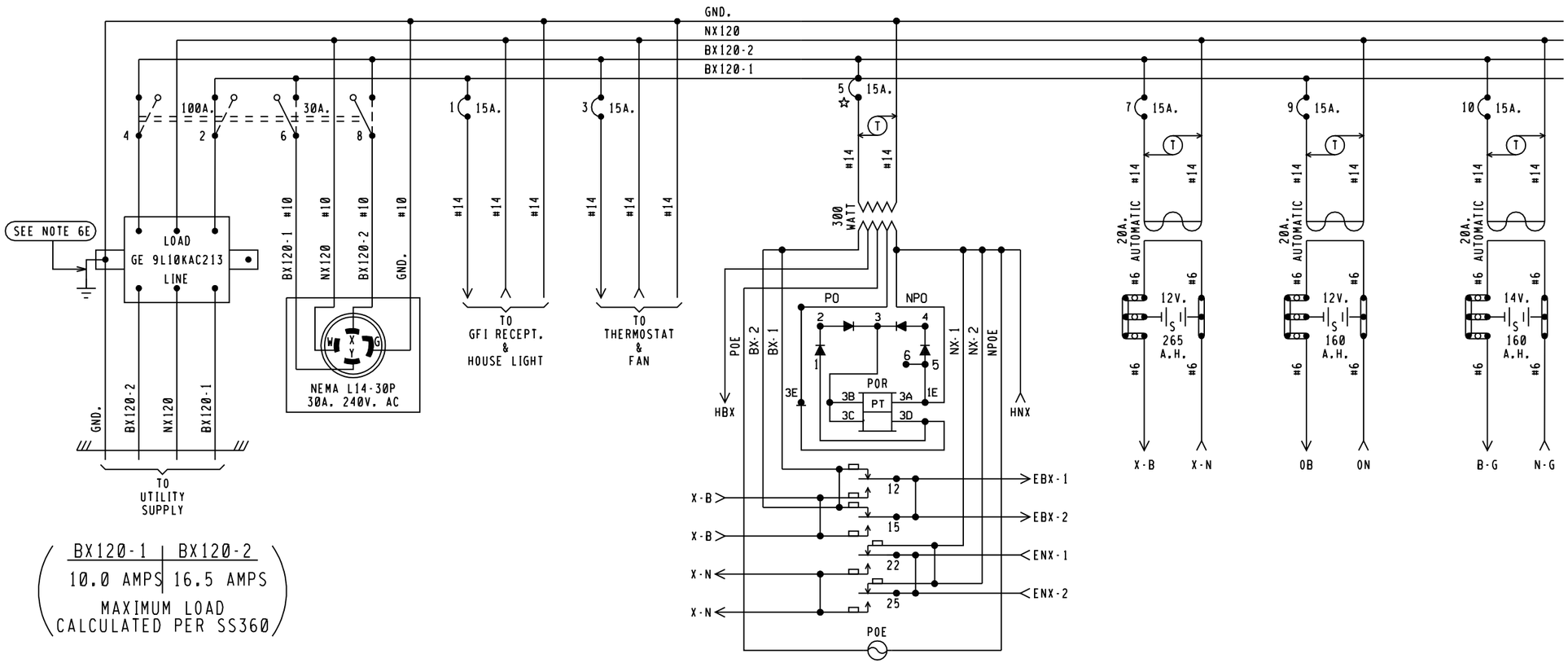

BX120-1	BX120-2
10.0 AMPS	16.5 AMPS

MAXIMUM LOAD
CALCULATED PER SS360

NOTES:

1 - REFERENCES ARE PER SCMS-13.
2 - ARRESTERS ARE PER SS382.
3 - SHELF RELAY PLACEMENT ON CONSIST CHART HAS NO SIGNIFICANCE.
4 - PLUG-IN RELAYS ARE VIEWED FROM THE FRONT OF RACK.
5 - BATTERY A.H. CAPACITY SHOWN IS THE MINIMUM REQUIREMENT.
6 - WIRING
  A - FEED TO ALL BUSSES, LIGHT CIRCUITS,MOTOR CIRCUITS TO BE #10 FLEX.
  B - 120-VOLT FEED FROM ENTRANCE TO POWER BUSS TO BE #10 FLEX.
  C - ALL TRACK WIRES TO BE #10 FLEX.
  D - ALL OTHERS TO BE #16 FLEX UNLESS NOTED.
  E - GROUND WIRE NOT NECESSARY WHEN GE ARRESTER IS MOUNTED ON GROUND PLANE OR METAL ENCLOSURE AFFIXED DIRECTLY TO BUNGALOW METALLIC STRUCTURAL MEMBER.
7 - CIRCUIT INTERRUPTERS 2 & 4 ARE MECHANICALLY INTERLOCKED WITH CIRCUIT INTERRUPTERS 6 & 8.

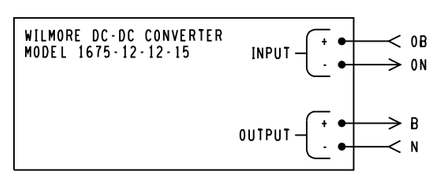

LOCATION D CROSSING (10-1CWU)
6'X 6' RELAY HOUSE
W/FARADAY SHIELD

NEW WORK
GE TRANSPORTATION
INTELLIGENT CONTROL SYSTEMS
Jacksonville, Florida
CSX PROJ #,IL2011037 DATE,08-25-12
DESIGNED BY,DLK CHECKED BY,FAP
XP4.E01
REV. 03-21-12

CSX TRANSPORTATION
RAIL TRANSPORT GROUP ENGINEERING
COMMUNICATIONS AND SIGNALS

B.I. JUNCTION
BROADWAY ST. (163416P)
POWER DISTRIBUTION
ALSIP, IL M.P. DC-15.04

DESIGNED	DIGITIZED	CHECKED	DATE
GET/DLK	GET/SAT	GET/FAP	08-25-12

DESIGN DATE	REV. NO.	DRAWING	SHEET NO	FILE	SHEET
08-25-12	3	-----	-----	DC01504	E11 (X)

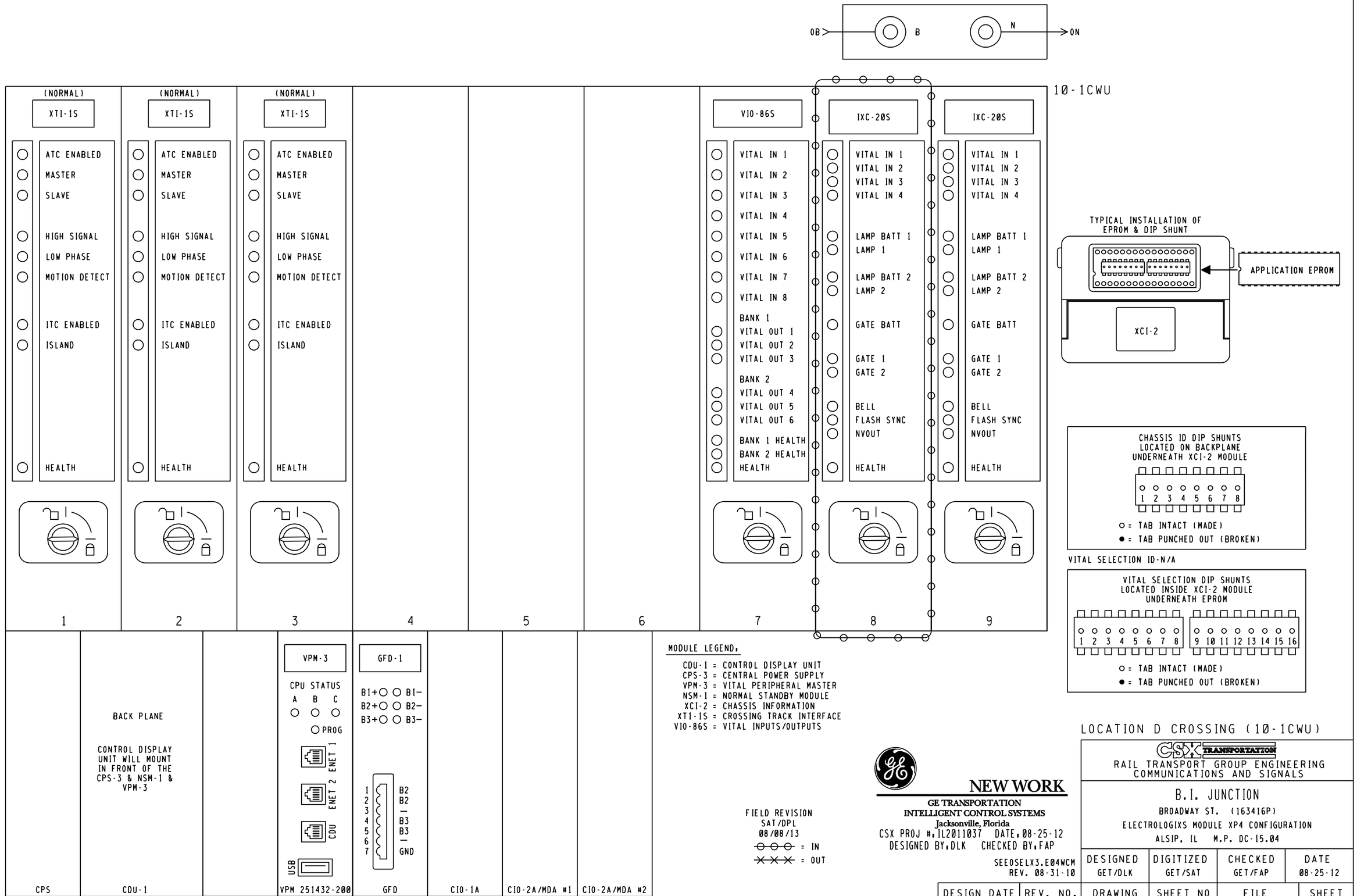
0B
B
N
0N
10-1CWU
(NORMAL)
XTI-1S
ATC ENABLED
MASTER
SLAVE
HIGH SIGNAL
LOW PHASE
MOTION DETECT
ITC ENABLED
ISLAND
HEALTH
1
2
3
4
5
6
7
8
9
V10-86S
IXC-20S
VITAL IN 1
VITAL IN 2
VITAL IN 3
VITAL IN 4
VITAL IN 5
VITAL IN 6
VITAL IN 7
VITAL IN 8
BANK 1
VITAL OUT 1
VITAL OUT 2
VITAL OUT 3
BANK 2
VITAL OUT 4
VITAL OUT 5
VITAL OUT 6
BANK 1 HEALTH
BANK 2 HEALTH
HEALTH
LAMP BATT 1
LAMP 1
LAMP BATT 2
LAMP 2
GATE BATT
GATE 1
GATE 2
BELL
FLASH SYNC
NVOUT
TYPICAL INSTALLATION OF EPROM & DIP SHUNT
APPLICATION EPROM
XCI-2
CHASSIS ID DIP SHUNTS LOCATED ON BACKPLANE UNDERNEATH XCI-2 MODULE
1 2 3 4 5 6 7 8
○ = TAB INTACT (MADE)
● = TAB PUNCHED OUT (BROKEN)
VITAL SELECTION ID-N/A
VITAL SELECTION DIP SHUNTS LOCATED INSIDE XCI-2 MODULE UNDERNEATH EPROM
1 2 3 4 5 6 7 8
9 10 11 12 13 14 15 16
○ = TAB INTACT (MADE)
● = TAB PUNCHED OUT (BROKEN)
CPS
BACK PLANE
CONTROL DISPLAY UNIT WILL MOUNT IN FRONT OF THE CPS-3 & NSM-1 & VPM-3
CDU-1
VPM-3
CPU STATUS
A B C
PROG
ENET 1
ENET 2
CDU
USB
VPM 251432-200
GFD-1
B1+ B1-
B2+ B2-
B3+ B3-
1 2 3 4 5 6 7
B2
B2
—
B3
B3
—
GND
GFD
CIO-1A
CIO-2A/MDA #1
CIO-2A/MDA #2
MODULE LEGEND:
CDU-1 = CONTROL DISPLAY UNIT
CPS-3 = CENTRAL POWER SUPPLY
VPM-3 = VITAL PERIPHERAL MASTER
NSM-1 = NORMAL STANDBY MODULE
XCI-2 = CHASSIS INFORMATION
XTI-1S = CROSSING TRACK INTERFACE
V10-86S = VITAL INPUTS/OUTPUTS
FIELD REVISION
SAT/DPL
08/08/13
= IN
= OUT
NEW WORK
GE TRANSPORTATION
INTELLIGENT CONTROL SYSTEMS
Jacksonville, Florida
CSX PROJ #:IL2011037 DATE:08-25-12
DESIGNED BY:DLK CHECKED BY:FAP
SEEOSELX3.E04WCM
REV. 08-31-10
LOCATION D CROSSING (10-1CWU)
CSX TRANSPORTATION
RAIL TRANSPORT GROUP ENGINEERING
COMMUNICATIONS AND SIGNALS
B.I. JUNCTION
BROADWAY ST. (163416P)
ELECTROLOGIXS MODULE XP4 CONFIGURATION
ALSIP, IL M.P. DC-15.04
DESIGNED GET/DLK
DIGITIZED GET/SAT
CHECKED GET/FAP
DATE 08-25-12
DESIGN DATE 08-25-12
REV. NO. 3
DRAWING -----
SHEET NO -----
FILE DC01504
SHEET E12

TOP ROW

10-2AX-1AR			10-2AX-1BR			10-2AX-2BR		
12	F		12	F		12	F	
15	F	B8	15	F	B8	15	F	B8
22		C30	22		C30	22		C30
23			23			23		
25			25			25		
32			32			32		
35			35			35		

POKR			
9		11	N68
10	F	12	C48

WALL MOUNTED

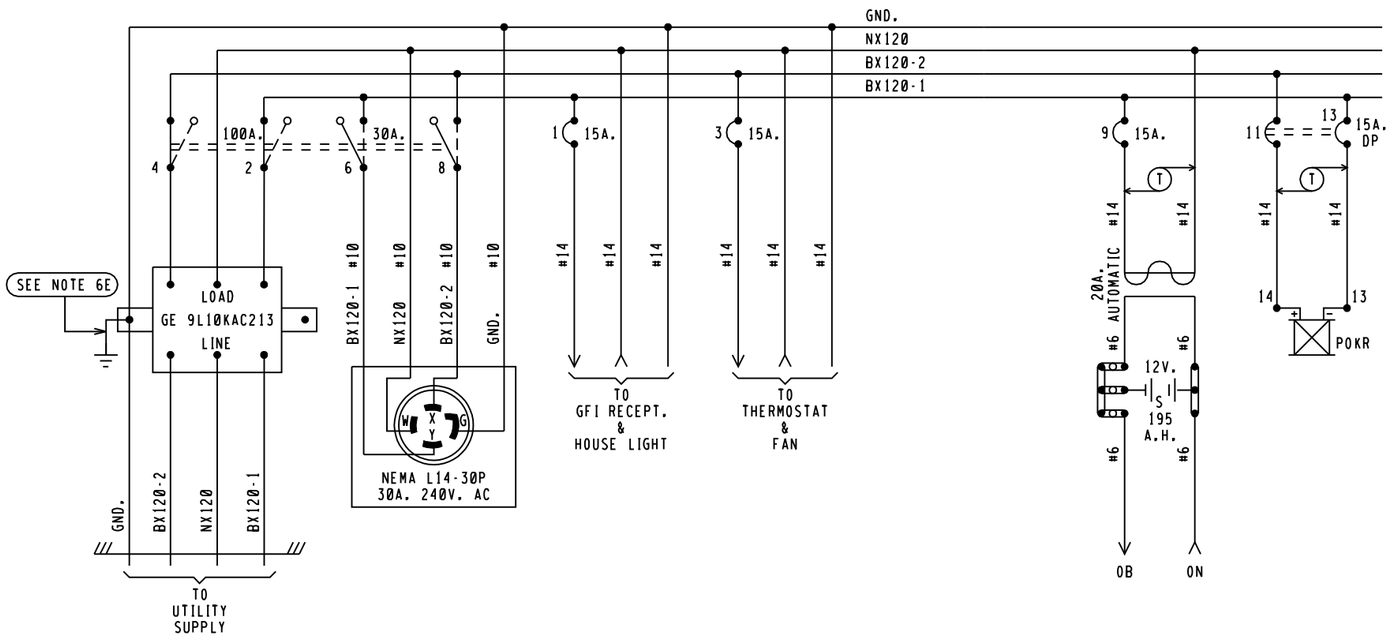

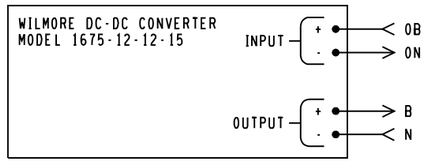

BX120-1	BX120-2
10.0 AMPS	2.0 AMPS

MAXIMUM LOAD
CALCULATED PER SS360

NOTES:

1 - REFERENCES ARE PER SCMS-13.
2 - ARRESTERS ARE PER SS382.
3 - SHELF RELAY PLACEMENT ON CONSIST CHART HAS NO SIGNIFICANCE.
4 - PLUG-IN RELAYS ARE VIEWED FROM THE FRONT OF RACK.
5 - BATTERY A.H. CAPACITY SHOWN IS THE MINIMUM REQUIREMENT.
6 - WIRING
  A - FEED TO ALL BUSSES, LIGHT CIRCUITS,MOTOR CIRCUITS TO BE #10 FLEX.
  B - 120-VOLT FEED FROM ENTRANCE TO POWER BUSS TO BE #10 FLEX.
  C - ALL TRACK WIRES TO BE #10 FLEX.
  D - ALL OTHERS TO BE #16 FLEX UNLESS NOTED.
  E - GROUND WIRE NOT NECESSARY WHEN GE ARRESTER IS MOUNTED ON GROUND PLANE OR METAL ENCLOSURE AFFIXED DIRECTLY TO BUNGALOW METALLIC STRUCTURAL MEMBER.
7 - CIRCUIT INTERRUPTERS 2 & 4 ARE MECHANICALLY INTERLOCKED WITH CIRCUIT INTERRUPTERS 6 & 8.

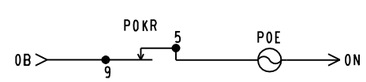

FIELD SET
03/19/13

NEW WORK

GE TRANSPORTATION
INTELLIGENT CONTROL SYSTEMS
Jacksonville, Florida
CSX PROJ #,IL2011037A DATE,01-29-13
DESIGNED BY,SAT CHECKED BY,DPL

LOCATION E CROSSING (10-2CWU)
6'X 6' RELAY HOUSE
W/FARADAY SHIELD

CSX TRANSPORTATION
RAIL TRANSPORT GROUP ENGINEERING
COMMUNICATIONS AND SIGNALS

B.I. JUNCTION
BROADWAY ST. (163416P)
POWER DISTRIBUTION
ALSIP, IL M.P. DC-15.04

XP4.E01
REV. 03-21-12

DESIGNED	DIGITIZED	CHECKED	DATE
GET/DLK	GET/SAT	GET/FAP	08-25-12

DESIGN DATE	REV. NO.	DRAWING	SHEET NO	FILE	SHEET
08-25-12	3	-----	-----	DC01504	E14

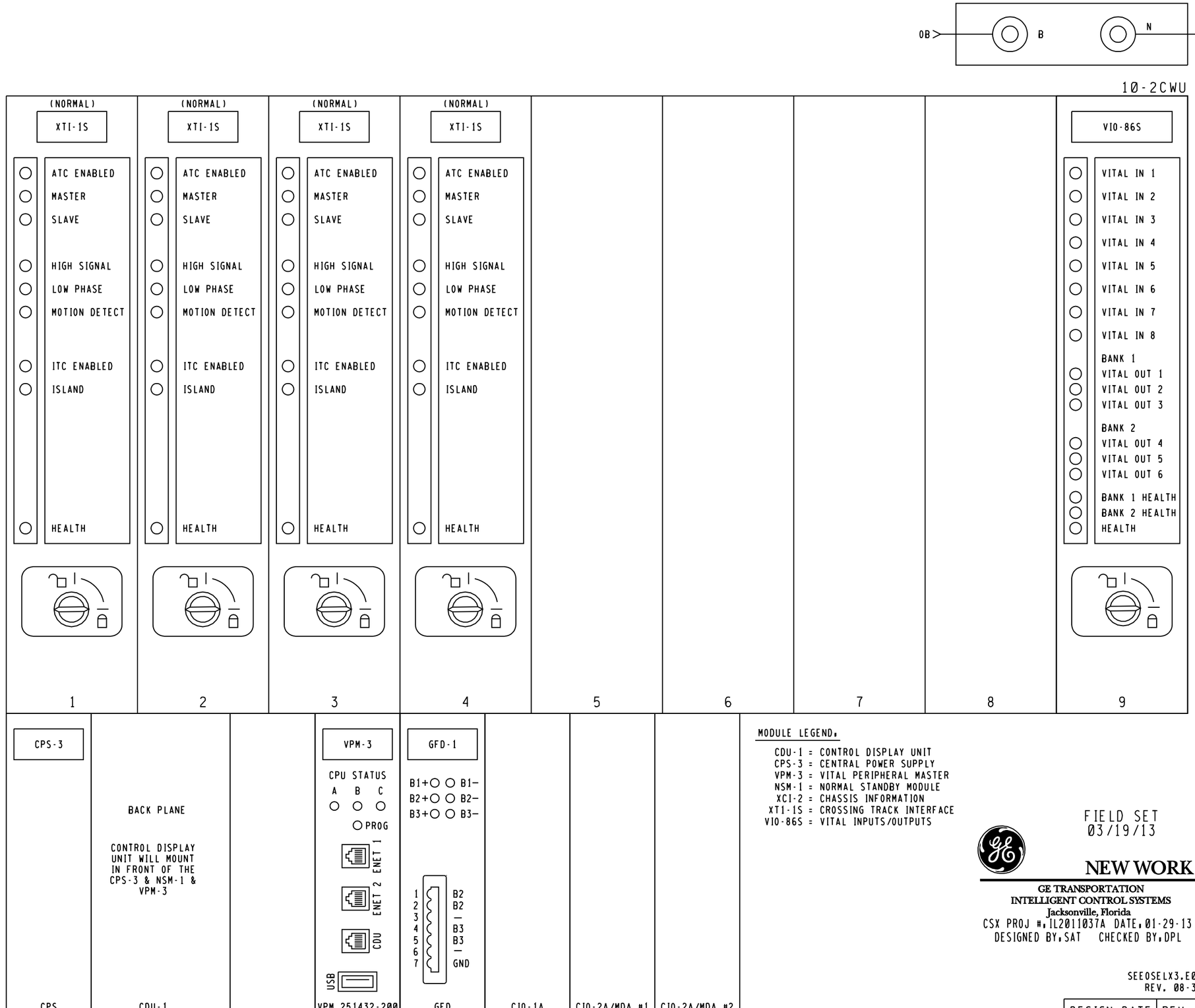

MODULE LEGEND:

CDU-1 = CONTROL DISPLAY UNIT
CPS-3 = CENTRAL POWER SUPPLY
VPM-3 = VITAL PERIPHERAL MASTER
NSM-1 = NORMAL STANDBY MODULE
XCI-2 = CHASSIS INFORMATION
XTI-1S = CROSSING TRACK INTERFACE
VIO-86S = VITAL INPUTS/OUTPUTS

TYPICAL INSTALLATION OF EPROM & DIP SHUNT

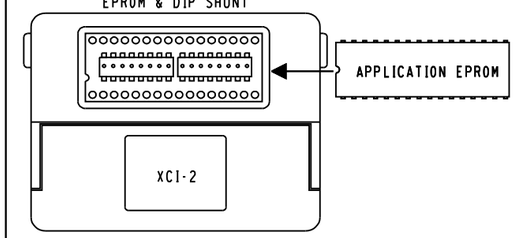

CHASSIS ID DIP SHUNTS LOCATED ON BACKPLANE UNDERNEATH XCI-2 MODULE

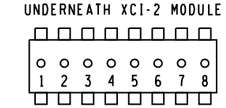

○ = TAB INTACT (MADE)
● = TAB PUNCHED OUT (BROKEN)

VITAL SELECTION ID-N/A

VITAL SELECTION DIP SHUNTS LOCATED INSIDE XCI-2 MODULE UNDERNEATH EPROM

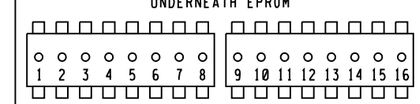

○ = TAB INTACT (MADE)
● = TAB PUNCHED OUT (BROKEN)

FIELD SET
03/19/13

NEW WORK

GE TRANSPORTATION
INTELLIGENT CONTROL SYSTEMS
Jacksonville, Florida
CSX PROJ #:IL2011037A DATE:01-29-13
DESIGNED BY:SAT CHECKED BY:DPL

LOCATION E CROSSING (10-2CWU)

CSX TRANSPORTATION
RAIL TRANSPORT GROUP ENGINEERING
COMMUNICATIONS AND SIGNALS

B.I. JUNCTION
BROADWAY ST. (163416P)
ELECTROLOGIXS MODULE XP4 CONFIGURATION
ALSIP, IL M.P. DC-15.04

SEE0SELX3.E04WCM
REV. 08-31-10

DESIGNED	DIGITIZED	CHECKED	DATE
GET/SAT	GET/SAT	GET/DPL	01-29-13

DESIGN DATE	REV. NO.	DRAWING	SHEET NO	FILE	SHEET
01-29-13	4	-----	-----	DC01504	E15 X

TOP ROW

POR			10-3AX-2P			10-4AX-2P			10-4AX-2D		
12	FB		12	F		12	F		12	F	
15	FB	B62	15	F	B8	15	F	B8	15	F	B8
22	FB	C30	22		C30	22		C30	22		C30
25	FB		23			23			23		
32	F		25			25			25		
35			32			32			32		
			35			35			35		

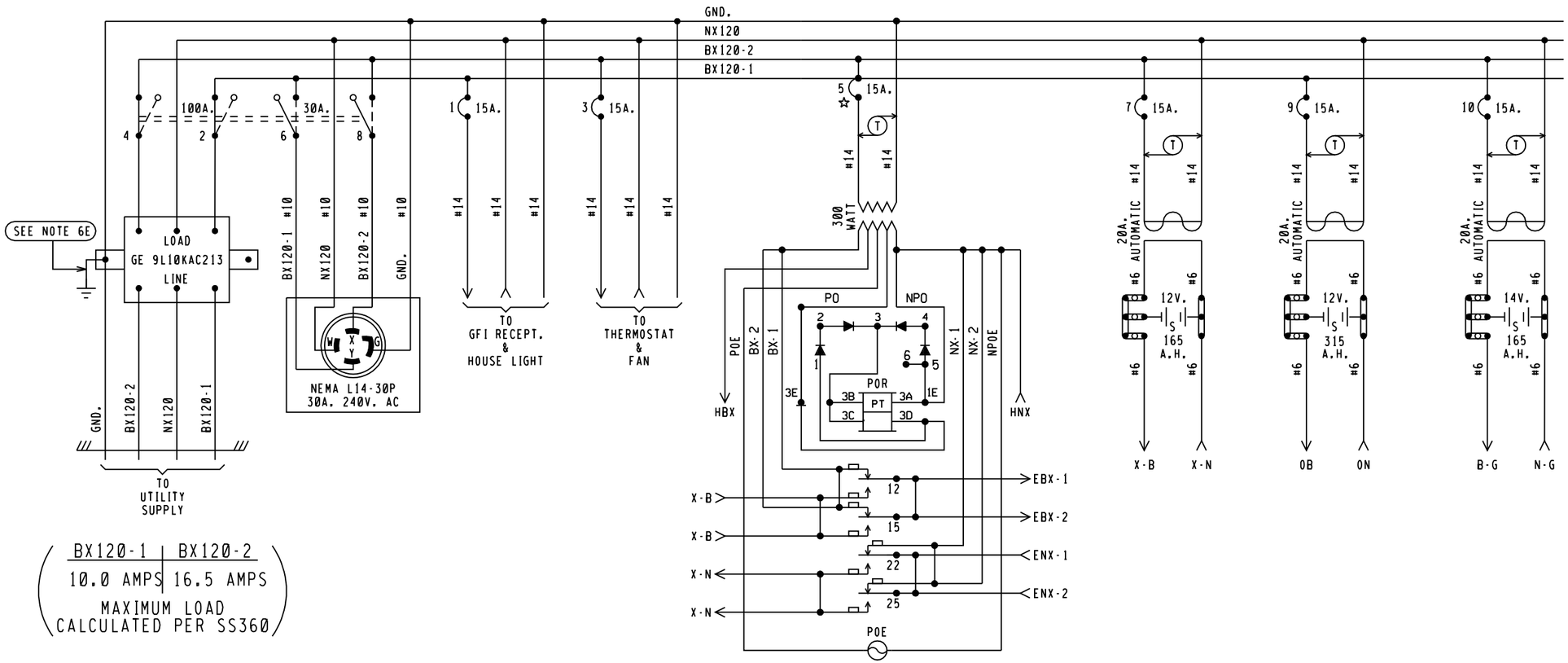

BX120-1	BX120-2
10.0 AMPS	16.5 AMPS

MAXIMUM LOAD
CALCULATED PER SS360

NOTES:

1 - REFERENCES ARE PER SCMS-13.
2 - ARRESTERS ARE PER SS382.
3 - SHELF RELAY PLACEMENT ON CONSIST CHART HAS NO SIGNIFICANCE.
4 - PLUG-IN RELAYS ARE VIEWED FROM THE FRONT OF RACK.
5 - BATTERY A.H. CAPACITY SHOWN IS THE MINIMUM REQUIREMENT.
6 - WIRING
  A - FEED TO ALL BUSSES, LIGHT CIRCUITS,MOTOR CIRCUITS TO BE #10 FLEX.
  B - 120-VOLT FEED FROM ENTRANCE TO POWER BUSS TO BE #10 FLEX.
  C - ALL TRACK WIRES TO BE #10 FLEX.
  D - ALL OTHERS TO BE #16 FLEX UNLESS NOTED.
  E - GROUND WIRE NOT NECESSARY WHEN GE ARRESTER IS MOUNTED ON GROUND PLANE OR METAL ENCLOSURE AFFIXED DIRECTLY TO BUNGALOW METALLIC STRUCTURAL MEMBER.
7 - CIRCUIT INTERRUPTERS 2 & 4 ARE MECHANICALLY INTERLOCKED WITH CIRCUIT INTERRUPTERS 6 & 8.

FIELD SET
03/19/13

NEW WORK

GE TRANSPORTATION
INTELLIGENT CONTROL SYSTEMS
Jacksonville, Florida
CSX PROJ #,IL2011037A DATE,01-29-13
DESIGNED BY,SAT CHECKED BY,DPL

LOCATION F CROSSING (10-3CWU)
6'X 6' RELAY HOUSE
W/ FARADAY SHIELD

CSX TRANSPORTATION
RAIL TRANSPORT GROUP ENGINEERING
COMMUNICATIONS AND SIGNALS

B.I. JUNCTION
BROADWAY ST. (163416P)
POWER DISTRIBUTION
ALSIP, IL M.P. DC-15.04

XP4.E01
REV. 03-21-12

DESIGNED	DIGITIZED	CHECKED	DATE
GET/DLK	GET/SAT	GET/FAP	08-25-12

DESIGN DATE	REV. NO.	DRAWING	SHEET NO	FILE	SHEET
08-25-12	3	-----	-----	DC01504	E17