CONTENT	SHEET #
TRACK LAYOUT	01
HXP-3R2 UNIT #1 WIRING DIAGRAM	02
HXP-3R2 UNIT #1 PROGRAM CONFIGURATION	03
HXP-3R2 UNIT #2 WIRING DIAGRAM	04
HXP-3R2 UNIT #2 PROGRAM CONFIGURATION	05
SSCCIII+ WITH ISOLATED GATE CROSSING CONTROLLER 40 AMP	06
SSCCIII+ PROGRAM DATA	07
HIGHWAY CROSSING ANALYZER HCA-1	08
RTU CIRCUITS	09
GATE MECHANISM CONTROL CIRCUITS NO.1 & NO.2 SAFETRAN S60	10
EC5 UNIT #1 CHASSIS LAYOUT & MODULE LAYOUT	11
EC5 UNIT #2 CHASSIS LAYOUT & MODULE LAYOUT	12
EC5 UNIT #1 TRACK CONNECTIONS & PSO 4000	13
EC5 UNIT #2 TRACK CONNECTIONS	14
DC DISTRIBUTION	15
AC DISTRIBUTION	16
BUNGALOW LAYOUT TOP VIEW	17
ENTRANCE BOARD L.I.G.P.	18
ENTRANCE BOARD L.I.G.P.	19
BUNGALOW LAYOUT SIDES A & B	20
BUNGALOW LAYOUT SIDES C & D	21

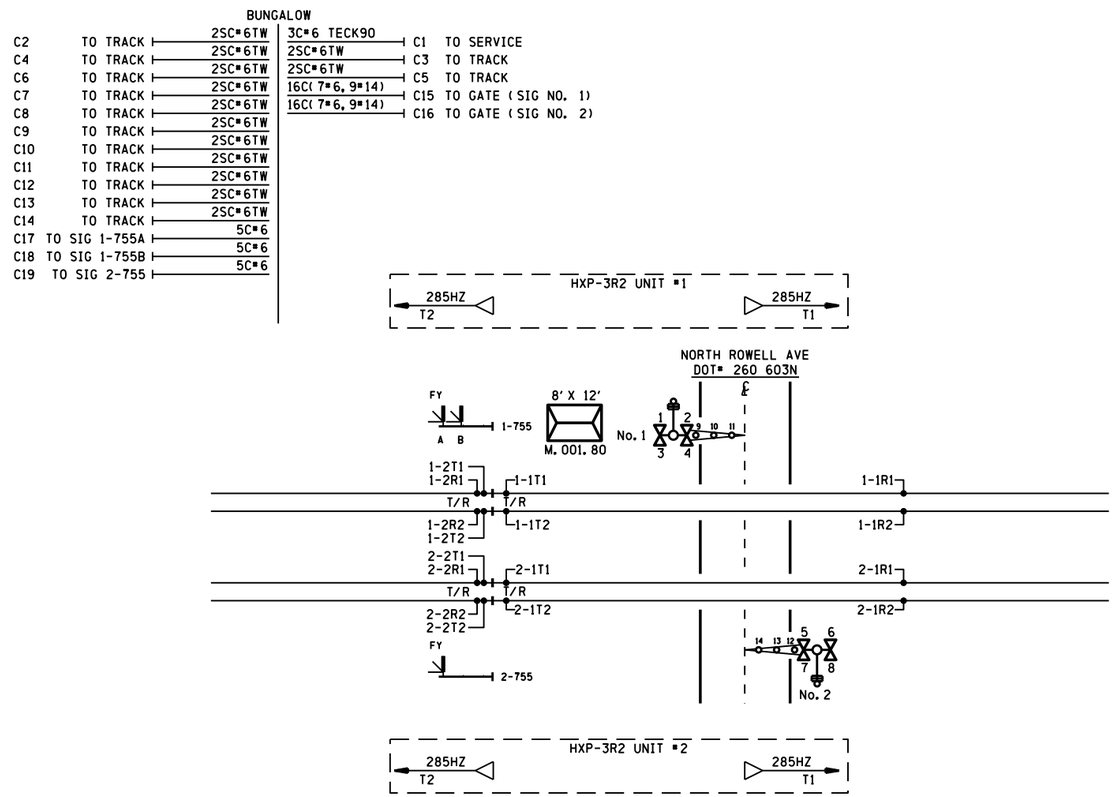

FLASHING LIGHT UNITS ALIGNMENT TABLE

PRIMARY FRONT LIGHTS FOR VEHICLES							
SIG #	LIGHT #	ROUNDEL		ROAD SPEED	MINIMUM DISTANCE	RECOMMENDED DISTANCE	ALIGNMENT DISTANCE
		SIZE	TYPE	MPH	FT	FT	FT
1	1,2	12"	LED	55	625	950	
2	7,8	12"	LED	55	625	950	
BACK LIGHTS FOR VEHICLES							
SIG #	LIGHT #	ROUNDEL		ROAD SPEED	MINIMUM DISTANCE	RECOMMENDED DISTANCE	ALIGNMENT DISTANCE
		SIZE	TYPE	MPH	FT	FT	FT
1	3,4	12"	LED	N/A	N/A	N/A	50
2	5,6	12"	LED	N/A	N/A	N/A	50

NOTE
FIELD IS TO PROVIDE THE ACTUAL ALIGNMENT DISTANCE AS DETERMINED BY
SCP-706: ROAD CROSSING DEVICE LIGHT UNIT ALIGNMENT PROCEDURES

NOTES

1) DENOTES MULTI-FREQ. NARROW BAND SHUNT #62775-1543

IRC 30 NOV 2011

PROPOSED
DESIGN NO. 11-0279
RED-IN YELLOW-OUT

AS INSTALLED
DATE
BY
(PRINT NAME)

8' X 12' BUNGALOW

PROPOSED D	M	Y	REVISIONS	D	C	COMPLETED D	M	Y	C

REGION SOUTHERN
SUB. MATTESON 334
SIGNALS AND COMMUNICATIONS HOMEWOOD
30 NOVEMBER 2011
DES. DL
CH. MKN
TRACK LAYOUT
JOLIET, IL
N ROWELL AVENUE
MTS-001.80-01
21
DOT# 260 603N

REVISIONS

NO.	DATE	BY	DESCRIPTION	APP. BY
1				
2				
3				
4				
5				

INVENSYS RAIL CORPORATION

DES.: DL	DATE: 30-11-11		JOB NO.: PICA10336
CKD.: MKN	ISSUE DATE: N/A		EST. NO.: GDXP06156
DRN.: DL	PLAN NO.: N/A		SHEET 1 OF 21
P TIME: 16:14	P DATE: $$PLOT_DATE		CAD ID.: MTS-001.80-01

INVENSYS RAIL CORP.
LOUISVILLE DIVISION, LOUISVILLE, KY

REVISIONS				
NO.	DATE	BY	DESCRIPTION	APP. BY
1				
2				
3				
4				
5				

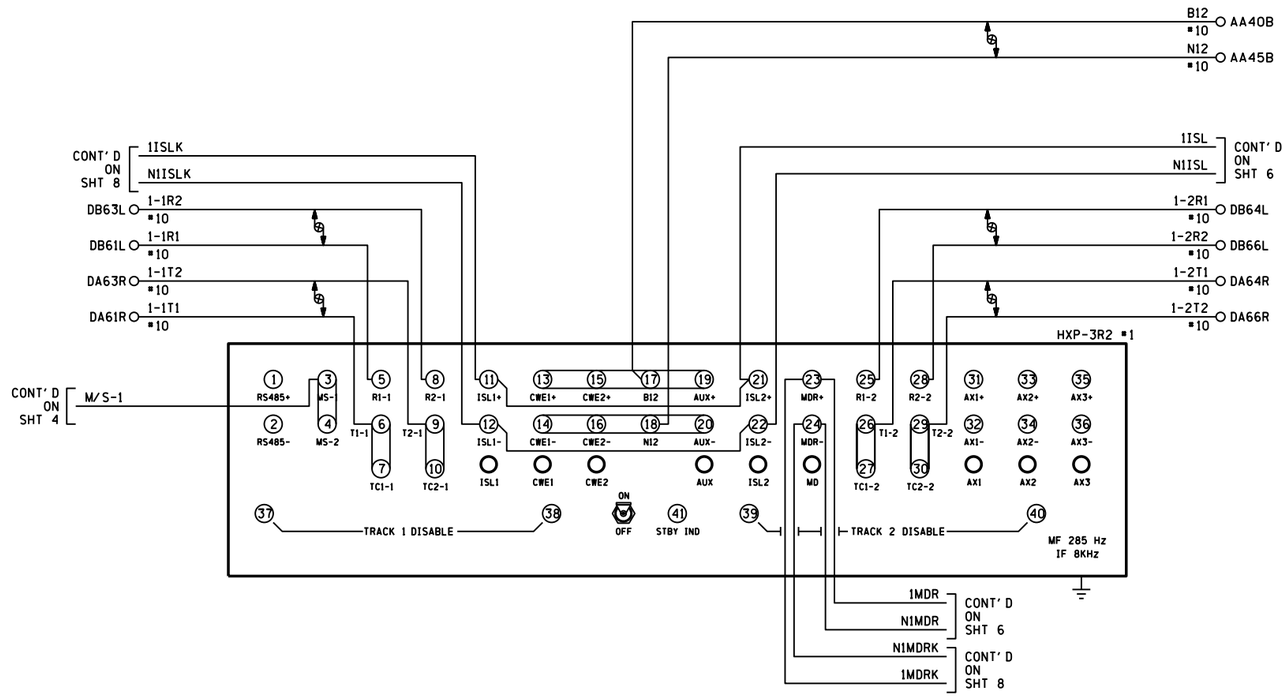

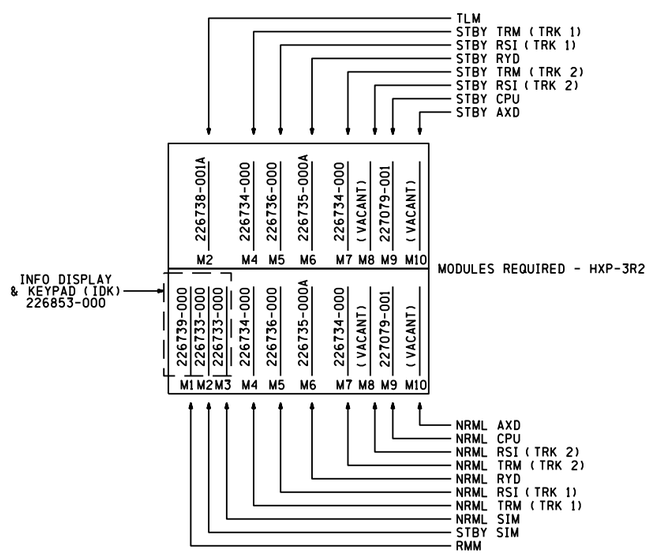

NOTES

1) ALL WIRING #16 AWG UNLESS OTHERWISE NOTED.

2) DENOTES TWISTED PAIR.

IRC 30 NOV 2011

PROPOSED
DESIGN NO. 11-0279
RED-IN YELLOW-OUT

AS INSTALLED
DATE _____
BY _____
(PRINT NAME)

8' X 12' BUNGALOW

PROPOSED D	M	Y	REVISIONS	D	C	COMPLETED D	M	Y	C

REGION SOUTHERN
SUB. MATTESON 334

SIGNALS AND COMMUNICATIONS HOMEWOOD
30 NOVEMBER 2011
DES. DL
CH. MKN

HXP-3R2 UNIT #1
WIRING DIAGRAM
JOLIET, IL
N ROWELL AVENUE

MTS-001.80-02

DOT# 260 603N

mts-001.80-02.dgn
23-JUL-2013

INVENSYS RAIL CORPORATION

DES.: DL	DATE: 30-11-11	JOB NO.: PICA10336	
CKD.: MKN	ISSUE DATE: N/A	EST. NO.: GDXP06156	
DRN.: DL	PLAN NO.: N/A	SHEET 2 OF 21	
P TIME: 16:14	P DATE: $$PLOT_DATE	CAD ID.: MTS-001.80-02	

INVENSYS RAIL CORP.
LOUISVILLE DIVISION, LOUISVILLE, KY

REVISIONS			
NO.	DATE	BY	DESCRIPTION	APP. BY
1				
2				
3				
4				
5				

Grade Crossing Location Record

Cabinet Number (Option 90) _____

Location NORTH ROWELL AVE Milepost 001.80 DOT 260 603N Date XX / XX / 11

Operating Program HPN _____ Version XXXXX

System Monitor Program HPN _____ Version XXXXX

Hardware Settings

Track 1 Master [X] Slave [ ] 4 kHz [ ] 8 kHz [X]

LOS jumper 0 [X] 1 [ ] 2 [ ] Fault jumper 0 [X] 1 [ ]

Approach configuration switch position: Normal [X] Short [ ] Very Short [ ]

Track 2 Master [ ] Slave [X] 4 kHz [ ] 8 kHz [ ]

LOS jumper 0 [X] 1 [ ] 2 [ ] Fault jumper 0 [X] 1 [ ]

Approach configuration switch position: Normal [X] Short [ ] Very Short [ ]

Adjust Select Adjustments

No.	Adjustment	Default	Range	Track 1	Track 2
1	Approach Length	9,999	0 - 9,999	2460 feet	2460 feet
2	Warning Time	99	23 - 99	32 seconds	32 seconds
3	LIA	0	-9 to +9	steps	steps
4	TC (1 step = 32)	395	430 - 470	steps	steps
5	MD Restart	99%	0 - 99%	RX	RX

Option Adjustments

No.	Adjustment	Default	Range	Track 1	Track 2
0	RX	0	1-100		
1	TK-ENA	UP	UP or dn	UP [X] dn [ ]	UP [X] dn [ ]
2	TK FO	0	0 - 9999	285 Hz	285 Hz
3	CW/MD	d	C to d	C [X] d [ ]	C [X] d [ ]
4	UNI-BI	b	U - b	U [X] b [ ]	U [X] b [ ]
5	NBS-C	0	0 - 99	99 RX	99 RX
		9,999	RX dependant	XXXX feet	XXXX feet
6	CWEWT	80	0 - 99	80 seconds	80 seconds
7	LOS	16	4 - 99	30 seconds	30 seconds
8	IJ-LOS	5	3 - 99	5 seconds	5 seconds
9	BC	frequency dependant	50 -250	XXX	XXX
10	P-COMP	0	0 - 10	XX degrees	XX degrees

HXP-3, HXP-3R, HXP-3R2

AX Adjustment Options

	Default	Range	Option 11 - AX1	Option 12 - AX2	Option 13 - AX3
TK-ASN		1, 2, Both	1 [ ] 2 [ ] Both [ ]	1 [ ] 2 [ ] Both [ ]	1 [ ] 2 [ ] Both [ ]
OF-TK1	0	0 - 9,999	feet	feet	feet
OF-TK2	0	0 - 9,999	feet	feet	feet
WT	99	23 - 99	seconds	seconds	seconds
MD-RST	99	0 - 99%	RX	RX	RX
CW/MD	d	C or d	C [ ] d [ ]	C [ ] d [ ]	C [ ] d [ ]
CJ-LOS	0	3 - 99	0 seconds	seconds	seconds
PJ-DET	15	4 - 15	15 seconds	seconds	seconds
POS-ST	dn	UP or dn	UP [ ] dn [ ]	UP [ ] dn [ ]	UP [ ] dn [ ]

No.	Adjustment	Default	Range	Track 1	Track 2
17	MDR-AX	n*	n or A	n [X] A [ ]	n [X] A [ ]
	OF-TK1	0	0 - 9,999	0 feet	
	OF-TK2	0	0 - 9,999		0 feet
	CJ-LOS	0	3 - 99	0 seconds	0 seconds
	PJ-DET	15	4 - 15	15 seconds	15 seconds
18	MD-TMR	10	10-99 (0=disable)	10 minutes	10 minutes
19	MIN-WT	0	23-99 (0=disable)	0 seconds	0 seconds
20	FS-DET	0	10-30 (0=disable)	0 minutes	0 minutes
21	POS-RX	0	0 - 74 (0=disable)	0 RX	0 RX
	POS-TM	0	0 - 99**	0 minutes	0 minutes
22	AR-TMR	0	0-80 (0=disable)	0 minutes	0 minutes
47	ATO-RX	dn	UP or dn	UP [ ] dn [X]	UP [ ] dn [X]
48	PF-ENA	UP	UP or dn	UP [X] dn [ ]	UP [X] dn [ ]

***n = not an AX drive (no options available)**

****0 = disable, 99 = continuous**

Shunt Record

West Approach		No Shunt RX	No Shunt Phase	100% Shunt RX	100% Shunt Phase	50% Shunt	50% Shunt RX	50% Shunt Phase	LIA Added % 1 to 9
Track 1	Normal								
	Standby								
Track 2	Normal								
	Standby								
East Approach									
Track 1	Normal								
	Standby								
Track 2	Normal								
	Standby								

IRC 30 NOV 2011

PROPOSED

DESIGN NO. 11-0279

RED-IN YELLOW-OUT

AS INSTALLED

DATE _____

BY _____

(PRINT NAME)

8' X 12' BUNGALOW

PROPOSED D	M	Y	REVISIONS	D	C	COMPLETED D	M	Y	C

REGION SOUTHERN

SUB. MATTESON 334

SIGNALS AND COMMUNICATIONS HOMEWOOD

DES. DL

30 NOVEMBER 2011

CH. MKN

HXP-3R2 UNIT #1
PROGRAM CONFIGURATION
JOLIET, IL

N ROWELL AVENUE

MTS-001.80-03

DOT# 260 603N

INVENSYS RAIL CORPORATION

DES. : DL	DATE: 30-11-11	JOB NO.: PICA10336	
CKD. : MKN	ISSUE DATE: N/A	EST. NO.: GDXP06156	
DRN. : DL	PLAN NO.: N/A	SHEET 3 OF 21	
P TIME: 16:14	P DATE: $$PLOT_DATE	CAD ID.: MTS-001.80-03	

INVENSYS RAIL CORP.
LOUISVILLE DIVISION, LOUISVILLE, KY

mts-001.80-03.dgn
23-JUL-2013

REVISIONS				
NO.	DATE	BY	DESCRIPTION	APP. BY
1				
2				
3				
4				
5				

mts-001.80-04.dgn
23-JUL-2013

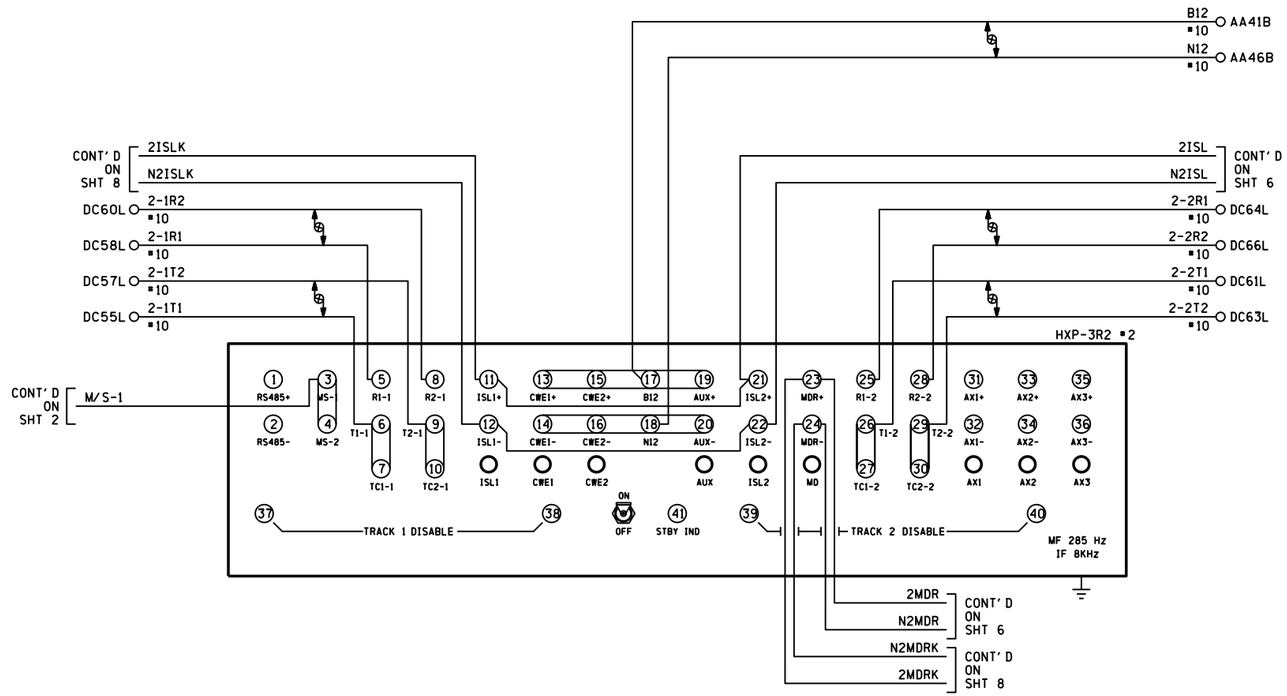

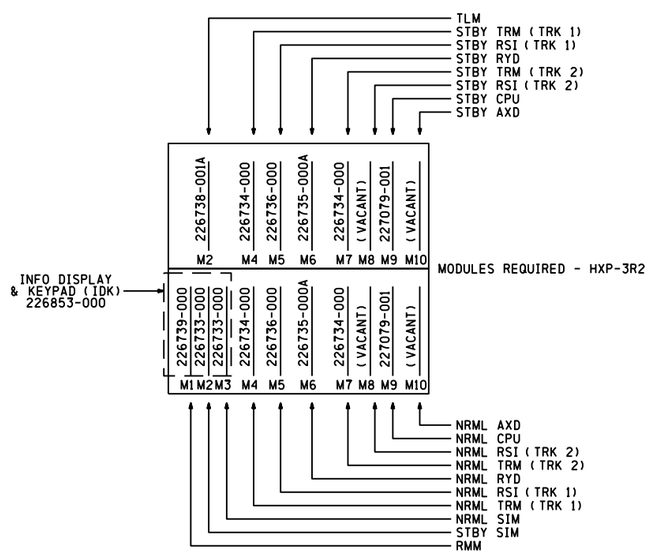

NOTES

1) ALL WIRING #16 AWG UNLESS OTHERWISE NOTED.

2) DENOTES TWISTED PAIR.

IRC 30 NOV 2011

PROPOSED
DESIGN NO. 11-0279
RED-IN YELLOW-OUT

AS INSTALLED
DATE _____
BY _____
(PRINT NAME)

8' X 12' BUNGALOW

PROPOSED			REVISIONS	D	C	COMPLETED			C
D	M	Y				D	M	Y	

REGION SOUTHERN
SUB. MATTESON 334

SIGNALS AND COMMUNICATIONS HOMEWOOD
30 NOVEMBER 2011
DES. DL
CH. MKN

HXP-3R2 UNIT #2
WIRING DIAGRAM
JOLIET, IL
N ROWELL AVENUE

MTS-001.80-04

DOT# 260 603N

INVENSYS RAIL CORPORATION

DES.: DL	DATE: 30-11-11	JOB NO.: PICA10336	
CKD.: MKN	ISSUE DATE: N/A	EST. NO.: GDXP06156	
DRN.: DL	PLAN NO.: N/A	SHEET 4 OF 21	
P TIME: 16:14	P DATE: $$PLOT_DATE	CAD ID.: MTS-001.80-04	

INVENSYS RAIL CORP.
LOUISVILLE DIVISION, LOUISVILLE, KY

REVISIONS				
NO.	DATE	BY	DESCRIPTION	APP. BY
1				
2				
3				
4				
5				

Grade Crossing Location Record

Cabinet Number (Option 90) _____

Location NORTH ROWELL AVE Milepost 001.80 DOT 206 603N Date XX / XX / 11

Operating Program HPN _____ Version XXXXX

System Monitor Program HPN _____ Version XXXXX

Hardware Settings

Track 1 Master [ ] Slave [X] 4 kHz [ ] 8 kHz [X]

LOS jumper 0 [X] 1 [ ] 2 [ ] Fault jumper 0 [X] 1 [ ]

Approach configuration switch position: Normal [X] Short [ ] Very Short [ ]

Track 2 Master [ ] Slave [X] 4 kHz [ ] 8 kHz [ ]

LOS jumper 0 [X] 1 [ ] 2 [ ] Fault jumper 0 [X] 1 [ ]

Approach configuration switch position: Normal [X] Short [ ] Very Short [ ]

Adjust Select Adjustments

No.	Adjustment	Default	Range	Track 1	Track 2
1	Approach Length	9,999	0 - 9,999	2460 feet	2460 feet
2	Warning Time	99	23 - 99	32 seconds	32 seconds
3	LIA	0	-9 to +9	steps	steps
4	TC (1 step = 32)	395	430 - 470	steps	steps
5	MD Restart	99%	0 - 99%	RX	RX

Option Adjustments

No.	Adjustment	Default	Range	Track 1	Track 2
0	RX	0	1-100		
1	TK-ENA	UP	UP or dn	UP [X] dn [ ]	UP [X] dn [ ]
2	TK FO	0	0 - 9999	285 Hz	285 Hz
3	CW/MD	d	C to d	C [X] d [ ]	C [X] d [ ]
4	UNI-BI	b	U - b	U [X] b [ ]	U [X] b [ ]
5	NBS-C	0	0 - 99	99 RX	99 RX
		9,999	RX dependant	XXXX feet	XXXX feet
6	CWEWT	80	0 - 99	80 seconds	80 seconds
7	LOS	16	4 - 99	30 seconds	30 seconds
8	IJ-LOS	5	3 - 99	5 seconds	5 seconds
9	BC	frequency dependant	50 -250	XXX	XXX
10	P-COMP	0	0 - 10	XX degrees	XX degrees

HXP-3, HXP-3R, HXP-3R2

AX Adjustment Options

	Default	Range	Option 11 - AX1	Option 12 - AX2	Option 13 - AX3
TK-ASN		1, 2, Both	1 [ ] 2 [ ] Both [ ]	1 [ ] 2 [ ] Both [ ]	1 [ ] 2 [ ] Both [ ]
OF-TK1	0	0 - 9,999	feet	feet	feet
OF-TK2	0	0 - 9,999	feet	feet	feet
WT	99	23 - 99	seconds	seconds	seconds
MD-RST	99	0 - 99%	RX	RX	RX
CW/MD	d	C or d	C [ ] d [ ]	C [ ] d [ ]	C [ ] d [ ]
CJ-LOS	0	3 - 99	seconds	seconds	seconds
PJ-DET	15	4 - 15	seconds	seconds	seconds
POS-ST	dn	UP or dn	UP [ ] dn [ ]	UP [ ] dn [ ]	UP [ ] dn [ ]

No.	Adjustment	Default	Range	Track 1	Track 2
17	MDR-AX	n*	n or A	n [X] A [ ]	n [X] A [ ]
	OF-TK1	0	0 - 9,999	0 feet	
	OF-TK2	0	0 - 9,999		0 feet
	CJ-LOS	0	3 - 99	0 seconds	0 seconds
	PJ-DET	15	4 - 15	15 seconds	15 seconds
18	MD-TMR	10	10-99 (0=disable)	10 minutes	10 minutes
19	MIN-WT	0	23-99 (0=disable)	0 seconds	0 seconds
20	FS-DET	0	10-30 (0=disable)	0 minutes	0 minutes
21	POS-RX	0	0 - 74 (0=disable)	0 RX	0 RX
	POS-TM	0	0 - 99**	0 minutes	0 minutes
22	AR-TMR	0	0-80 (0=disable)	0 minutes	0 minutes
47	ATO-RX	dn	UP or dn	UP [ ] dn [X]	UP [ ] dn [X]
48	PF-ENA	UP	UP or dn	UP [X] dn [ ]	UP [X] dn [ ]

***n = not an AX drive (no options available)**

****0 = disable, 99 = continuous**

Shunt Record

West Approach		No Shunt RX	No Shunt Phase	100% Shunt RX	100% Shunt Phase	50% Shunt	50% Shunt RX	50% Shunt Phase	LIA Added % 1 to 9
Track 1	Normal								
	Standby								
Track 2	Normal								
	Standby								
East Approach									
Track 1	Normal								
	Standby								
Track 2	Normal								
	Standby								

IRC 30 NOV 2011

PROPOSED
DESIGN NO. 11-0279
RED-IN YELLOW-OUT

AS INSTALLED
DATE _____
BY _____
(PRINT NAME)

8' X 12' BUNGALOW

PROPOSED D	M	Y	REVISIONS	D	C	COMPLETED D	M	Y	C

REGION SOUTHERN
SUB. MATTESON 334

SIGNALS AND COMMUNICATIONS HOMEWOOD
30 NOVEMBER 2011
DES. DL
CH. MKN

HXP-3R2 UNIT #2
PROGRAM CONFIGURATION
JOLIET, IL
N ROWELL AVENUE

MTS-001.80-05

DOT# 260 603N

INVENSYS RAIL CORPORATION
DES. : DL DATE: 30-11-11 JOB NO.: PICA10336
CKD. : MKN ISSUE DATE: N/A EST. NO.: GDXP06156
DRN. : DL PLAN NO.: N/A SHEET 5 OF 21
P TIME: 16:14 P DATE: $$PLOT_DATE CAD ID.: MTS-001.80-05

INVENSYS RAIL CORP.
LOUISVILLE DIVISION, LOUISVILLE, KY

mts-001.80-05.dgn
23-JUL-2013

REVISIONS				
NO.	DATE	BY	DESCRIPTION	APP. BY
1				
2				
3				
4				
5				

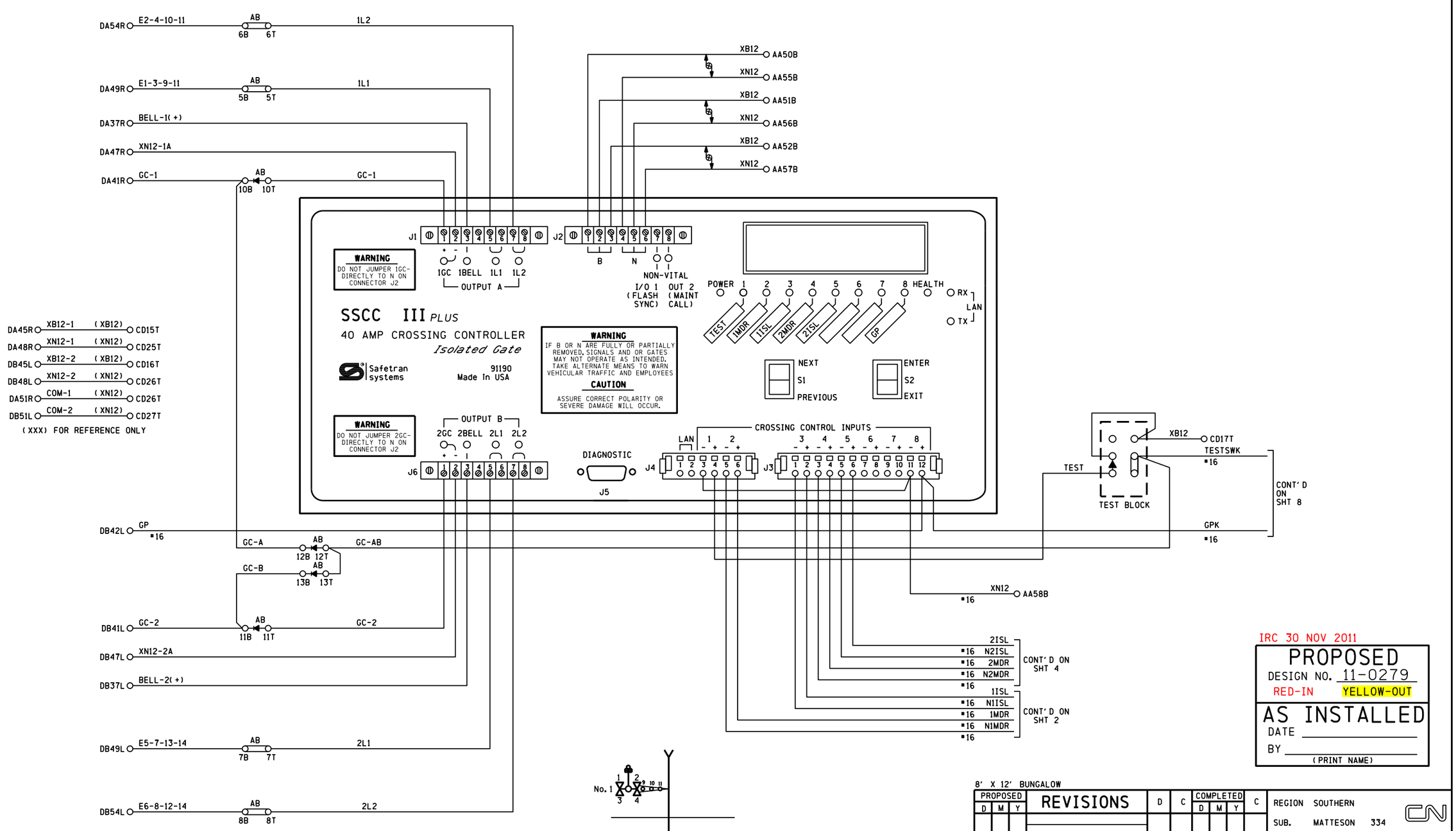

NOTES

1) DENOTES RECTIFIER : (SAFETRAN #8008A299006)

2) DENOTES TWISTED PAIR.

3) ALL WIRING #10 AWG UNLESS OTHERWISE NOTED.

IRC 30 NOV 2011

PROPOSED
DESIGN NO. 11-0279
RED-IN YELLOW-OUT

AS INSTALLED
DATE _____
BY _____
(PRINT NAME)

8' X 12' BUNGALOW

PROPOSED			REVISIONS	D	C	COMPLETED			C
D	M	Y				D	M	Y	

REGION SOUTHERN
SUB. MATTESON 334

SIGNALS AND COMMUNICATIONS HOMEWOOD
DES. DL
30 NOVEMBER 2011
CH. MKN

SSCCIII+ WITH ISOLATED GATE CROSSING CONTROLLER 40 AMP
JOLIET, IL
N ROWELL AVENUE

MTS-001.80-06

DOT# 260 603N

INVENSYS RAIL CORPORATION

DES. : DL	DATE: 30-11-11	JOB NO.: PICA10336	
CKD. : MKN	ISSUE DATE: N/A	EST. NO.: GDXP06156	
DRN. : DL	PLAN NO.: N/A	SHEET 6 OF 21	
P TIME: 16:14	P DATE: $$PLOT_DATE	CAD ID.: MTS-001.80-06	

INVENSYS RAIL CORP.
LOUISVILLE DIVISION, LOUISVILLE, KY

mts-001.80-06.dgn
23-JUL-2013

REVISIONS				
NO.	DATE	BY	DESCRIPTION	APP. BY
1				
2				
3				
4				
5				

CROSSING CONTROLLER SSCCIII+ 40-AMPERE UNIT, 91190

PROGRAM	NOTES	INITIAL SETTING BY: RMC DATE: 9/22/11
FLASH RATE:	30-70 FLASHES/MINUTE DEFAULT = 50	60 FLASHES/MINUTE
GATES USED:	YES/NO DEFAULT = YES	☑ YES ☐ NO
1 GC DELAY:	3-20 SEC., DEFAULT = 4	4 SECONDS
2 GC DELAY (40 AMP UNIT):	3-20 SEC., DEFAULT = 4	4 SECONDS
GATE RISING BELL:	ON/OFF, DEFAULT = ON	☐ ON ☑ OFF
ENABLED INPUTS:	1 THRU 7 ONLY	☑1 ☑2 ☑3 ☑4 ☑5 ☐ 6 ☐ 7
GC2/I7:	GC2 NORMAL, I7 = NORMAL GC2 INVERTED, I7 = NORMAL GC2 PRMT RELAY, I7 = PRMT HEALTH GC2 BEACONFDBK	☑ NORMAL ☐ INVERTED ☐ PRE-EMPT SIM ☐ PRE-EMPT ADV ☐ BEACON
INPUT 7	INPUT, PRMT HLTH, TEST SW	☐ IN ☐ HEALTH ☐ TEST SW
TEST SW 2TRKDSTK ONLY	ACTIVATE, ACT & STICK RELEASE	☐ ACTIVATE ☐ ACT & REL
ADV PRE-EMPT TIME (40A):	1-99 SEC., DEFAULT = 1	N/A SECONDS
MIN ACTIVATION TIME:	0-99 SEC., DEFAULT = 20	22
STICK RELEASE TIME:	5-120 MIN., DEFAULT = 15	N/A MINUTES
BEACON PICK-UP DELAY	5-600 SEC., DEFAULT = 20	N/A SECONDS
SUP ISLAND TIME:	5-20 MIN., DEFAULT = 20	N/A MINUTES
ENABLED OUTPUTS: (40 amp only)	DEFAULT = A + B	☑ A + B ☐ A ☐ B
DAYLIGHT SAVINGS:	DEFAULT = DISABLED	☑ ENABLED ☐ DISABLED
DATE:	N/A	☐ DATE SET
TIME:	24-FORMAT	☐ TIME SET
PASSWORD:	DEFAULT = DISABLED	☐ ENABLED ☑ DISABLED
CONFIGURE		
LOS TIMERS:	0-20 SECONDS, INPUTS 1-7 ONLY DEFAULT = 0	1: 0 SEC 5: 0 SEC 2: 0 SEC 6: 0 SEC 3: 0 SEC 7: 0 SEC 4: 0 SEC
MCF:		MCF: BASICPLS CRC:
ATCS ADDRESS:	DEFAULT = 700000000000	
LOW BATTERY:	9.0-15.0 VOLTS, OR DISABLED DEFAULT = DISABLED	☑ DISABLED ☐ ENABLED _____ VOLTS
AUX I/O:	DEFAULT = NONVITAL OUTPUT	☑ NV OUTPUT ☐ FLASH SYNC IN ☐ FLASH SYNC OUT
DETECT LAMP NEUTRAL WIRE	DEFAULT = YES	☐ YES ☑ NO
TEST CONFIGURE		
LAMP TEST CANCEL TIMER:	1-15 MINUTES, DEFAULT = 5	5 MINUTES
LAMP TEST DELAY TIMER:	30-120 SEC., DEFAULT = 30	30 SEC.
LAMP TEST ON TIMER:	15-60 SEC., DEFAULT = 15	15 SEC.

• FIELD TO CONFIRM

STANDARD SETUP LAMP VOLTAGES PROCEDURE
USING TRUE RMS AC+DC METER, OR CONVERSION TABLE BELOW

SETUP LAMP VOLTAGES	INITIAL SETTINGS BY: _____ DATE: _____ METER: _____
FAR GATE	1 L1 = _____ VOLTS 1 L2 = _____ VOLTS 2 L1 = _____ VOLTS 2 L2 = _____ VOLTS
SSCCIII+	1 L1 = _____ VOLTS 1 L2 = _____ VOLTS 2 L1 = _____ VOLTS 2 L2 = _____ VOLTS
NEAR GATE	1 L1 = _____ VOLTS 1 L2 = _____ VOLTS 2 L1 = _____ VOLTS 2 L2 = _____ VOLTS

MULTIMETER READING VARIANCE FROM ACTUAL LAMP VOLTAGE

BATTERY BANK VOLTAGE	VALID LAMP OUTPUT RANGE (in volts)	DIGITAL METER (FLUKE 87 OR EQUIVALENT)	ANALOG METER (SIMPSON 260 OR TS111)
13.3	9.0 TO 12.0	1.3 VOLTS BELOW ACTUAL VALUE	0.6 VOLTS BELOW ACTUAL VALUE
14.7	9.0 TO 12.0	2.2 VOLTS BELOW ACTUAL VALUE	1.1 VOLTS BELOW ACTUAL VALUE
15.8	9.0 TO 12.0	2.6 VOLTS BELOW ACTUAL VALUE	2.0 VOLTS BELOW ACTUAL VALUE

FOR LAMP OUTPUT SETTINGS GREATER THAN 12.0 VOLTS, REDUCE THE LISTED VALUES BY 30%
LAMP VOLTAGE MEASUREMENTS SHOULD BE ACCURATE TO 0.3 VOLTS.

SOFTWARE VERSION: 9V546-A01.M

IRC 30 NOV 2011

PROPOSED
DESIGN NO. 11-0279
RED-IN YELLOW-OUT

AS INSTALLED
DATE _____
BY _____
(PRINT NAME)

8' X 12' BUNGALOW

PROPOSED D	M	Y	REVISIONS	D	C	COMPLETED D	M	Y	C

REGION SOUTHERN
SUB. MATTESON 334
SIGNALS AND COMMUNICATIONS HOMEWOOD
30 NOVEMBER 2011
DES. DL
CH. MKN
SSCCIII+
PROGRAM DATA
JOLIET, IL
N ROWELL AVENUE
MTS-001.80-07
DOT# 260 603N

INVENSYS RAIL CORPORATION
DES.: DL | DATE: 30-11-11 | JOB NO.: PICA10336
CKD.: MKN | ISSUE DATE: N/A | EST. NO.: GDXP06156
DRN.: DL | PLAN NO.: N/A | SHEET 7 OF 21
P TIME: 16:14 | P DATE: $$PLOT_DATE | CAD ID.: MTS-001.80-07

INVENSYS RAIL CORP.
LOUISVILLE DIVISION, LOUISVILLE, KY

mts-001.80-07.dgn
23-JUL-2013

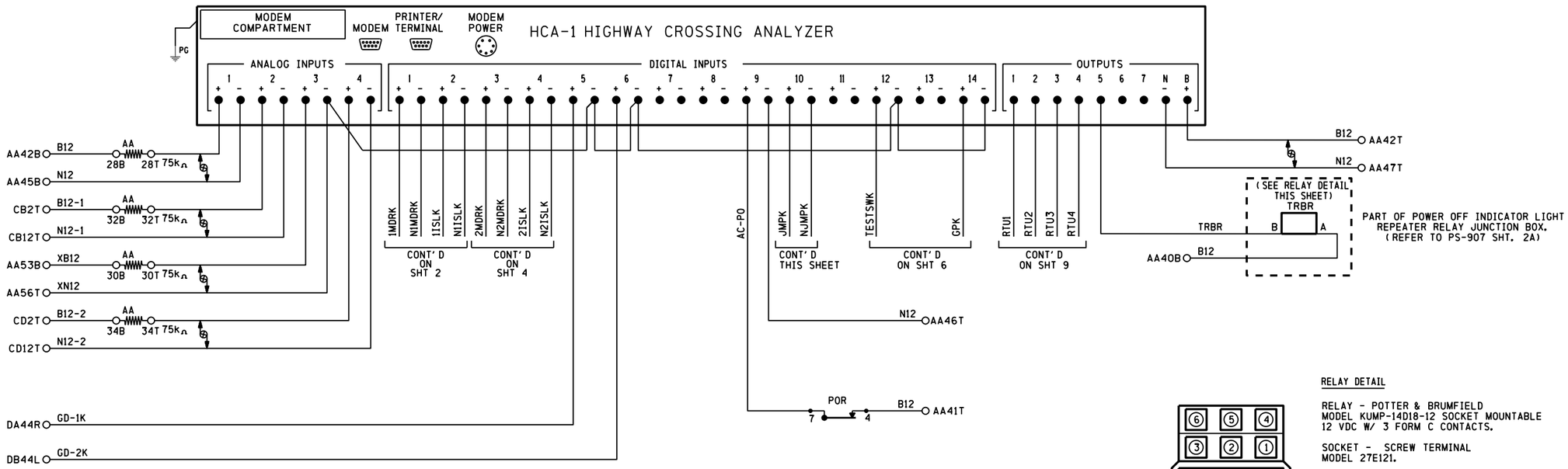

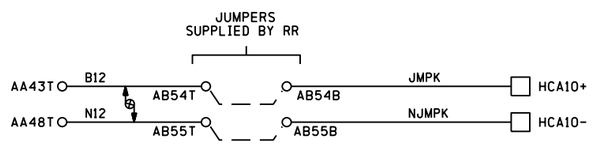

RELAY DETAIL

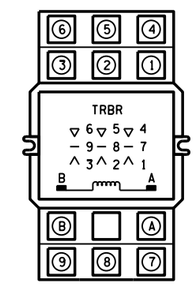

LOCATED OVER ENTRY DOOR

RELAY - POTTER & BRUMFIELD
MODEL KUMP-14D18-12 SOCKET MOUNTABLE
12 VDC W/ 3 FORM C CONTACTS.

SOCKET - SCREW TERMINAL
MODEL 27E121.

RELAY WIRING DIAGRAM (REAR VIEW)

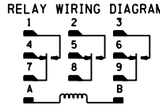

NOTE:
SOCKET NUMBERING CORRESPONDS DIRECTLY WITH RELAY NUMBERING.
(COIL SHOWN ENERGIZED)

IRC 30 NOV 2011

PROPOSED
DESIGN NO. 11-0279
RED-IN YELLOW-OUT

AS INSTALLED
DATE _____
BY _____
(PRINT NAME)

NOTES

1) ALL WIRING #16 AWG UNLESS OTHERWISE NOTED.

2) DENOTES TWISTED PAIR.

8' X 12' BUNGALOW

PROPOSED D	M	Y	REVISIONS	D	C	COMPLETED D	M	Y	C

REGION SOUTHERN
SUB. MATTESON 334

SIGNALS AND COMMUNICATIONS HOMEWOOD
30 NOVEMBER 2011
DES. DL
CH. MKN

HIGHWAY CROSSING ANALYZER
HCA-1
JOLIET, IL
N ROWELL AVENUE

MTS-001.80-08

DOT# 260 603N

INVENSYS RAIL CORPORATION
DES.: DL | DATE: 30-11-11 | JOB NO.: PICA10336
CKD.: MKN | ISSUE DATE: N/A | EST. NO.: 1QDXP06156
DRN.: DL | PLAN NO.: N/A | SHEET 8 OF 21
P TIME: 16:14 | P DATE: $$PLOT_DATE | CAD ID.: MTS-001.80-08

INVENSYS RAIL CORP.
LOUISVILLE DIVISION, LOUISVILLE, KY

REVISIONS				
NO.	DATE	BY	DESCRIPTION	APP. BY
1				
2				
3				
4				
5				

mts-001.80-08.dgn
23-JUL-2013

REVISIONS				
NO.	DATE	BY	DESCRIPTION	APP. BY
1				
2				
3				
4				
5				

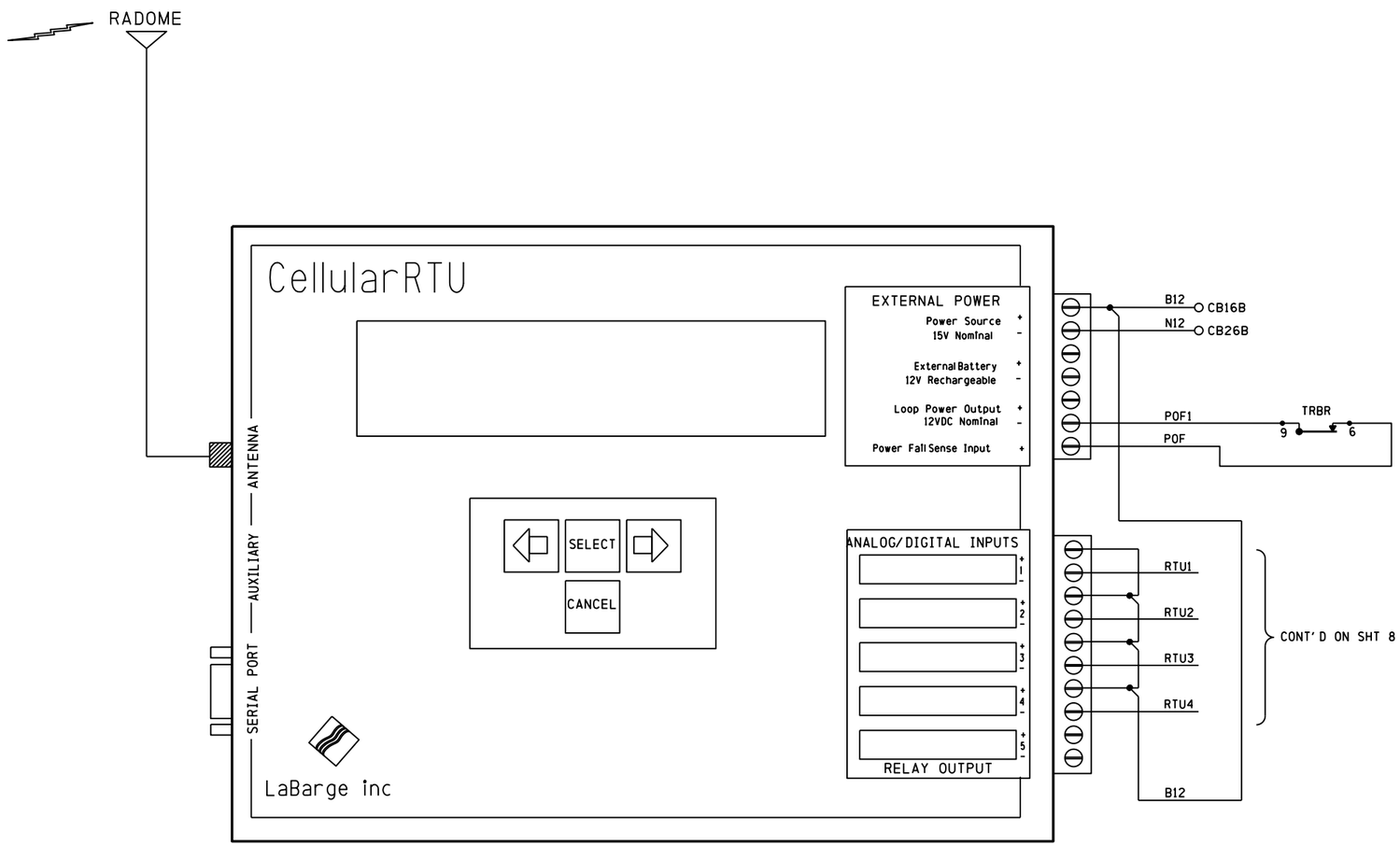

mts-001.80-09.dgn
23-JUL-2013

IRC 30 NOV 2011

PROPOSED
DESIGN NO. 11-0279
RED-IN YELLOW-OUT

AS INSTALLED
DATE _____
BY _____
(PRINT NAME)

8' X 12' BUNGALOW

PROPOSED D	M	Y	REVISIONS	D	C	COMPLETED D	M	Y	C

REGION SOUTHERN
SUB. MATTESON 334

SIGNALS AND COMMUNICATIONS HOMEWOOD
30 NOVEMBER 2011
DES. DL
CH. MKN

RTU CIRCUITS
JOLIET, IL
N ROWELL AVENUE

MTS-001.80-09

DOT# 260 603N

NOTES
1) ALL WIRING #16 AWG UNLESS OTHERWISE NOTED.

INVENSYS RAIL CORPORATION		
DES.: DL	DATE: 30-11-11	JOB NO.: PICAI0336
CKD.: MKN	ISSUE DATE: N/A	EST. NO.: GDXP06156
DRN.: DL	PLAN NO.: N/A	SHEET 9 OF 21
P TIME: 16:14	P DATE: $$PLOT_DATE	CAD ID.: MTS-001.80-09

INVENSYS RAIL CORP.
LOUISVILLE DIVISION, LOUISVILLE, KY

CONTACT	CLOSED AT	FUNCTION
6	70° -90°	POWER DOWN CONTROL
7	0° -89°	POWER UP CONTROL
8	83° -90°	FLASHING LGT. CONTROL
9	5° -90°	BELL CONTROL
10	0° -5°	GATE DOWN INDICATION
11	N/A	SPARE
12	N/A	SPARE

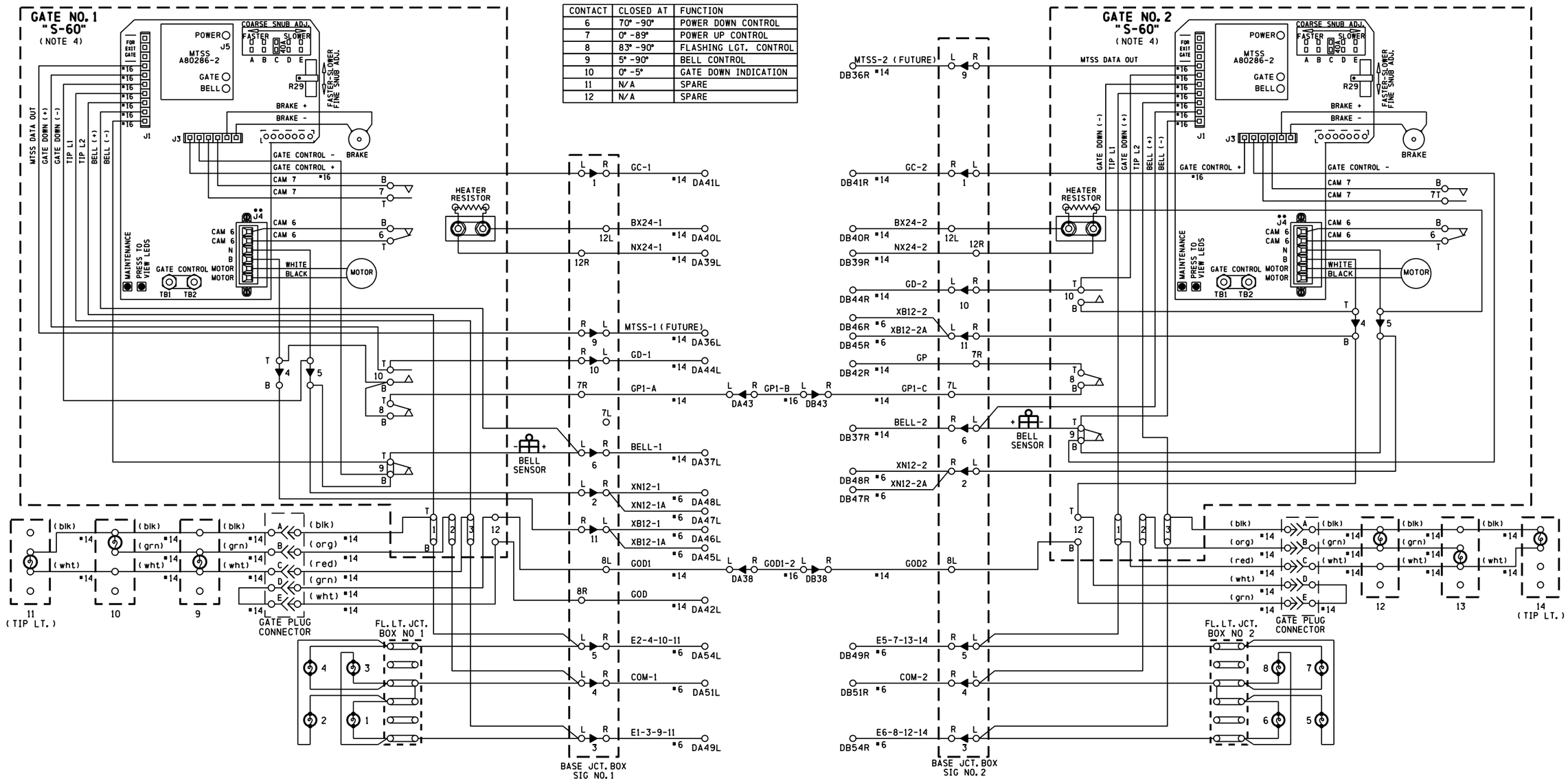

NOTES

1) ON GATE No. 1 ADD JUMPER BETWEEN TERMINALS:
   ADD JUMPER BETWEEN TERMINAL 4T & 10B,
   ADD JUMPER BETWEEN TERMINAL 8B & 10B,
   AND ADD JUMPER BETWEEN TERMINAL 5B & 9B
2) ON GATE No. 2 ADD JUMPER BETWEEN TERMINALS:
   ADD JUMPER BETWEEN TERMINAL 4T &10B,
   ADD JUMPER BETWEEN TERMINAL 5B & 9B,
   AND ADD JUMPER BETWEEN TERMINAL 4B & 12T
3) ALL WIRING #10 AWG UNLESS OTHERWISE NOTED
4) GATE DESCENT TIME (RELEASE FROM VERTICAL TO FULLY HORIZONTAL) TO BE WITHIN 11 SECONDS
5) BELL CUT-OUT (5°-90°) WHEN REQUIRED REMOVE STRAP BETWEEN 9B AND 9T
6) ENSURE ALL TERMINALS HAVE TWO SHOULDER NUTS

IRC 30 NOV 2011

PROPOSED
DESIGN NO. 11-0279
RED-IN YELLOW-OUT

AS INSTALLED
DATE _____
BY _____
(PRINT NAME)

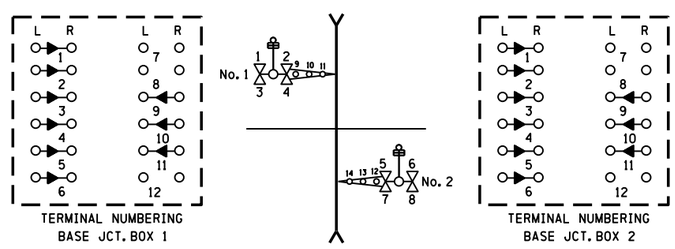

8' X 12' BUNGALOW

PROPOSED D	PROPOSED M	PROPOSED Y	REVISIONS	D	C	COMPLETED D	COMPLETED M	COMPLETED Y	C

REGION SOUTHERN
SUB. MATTESON 334

SIGNALS AND COMMUNICATIONS HOMEWOOD
30 NOVEMBER 2011
DES. DL
CH. MKN

GATE MECHANISM CONTROL CIRCUITS
NO. 1 & NO. 2 SAFETRAN S60
JOLIET, IL
N ROWELL AVENUE

MTS-001.80-10

DOT# 260 603N

mts-001.80-10.dgn
23-JUL-2013

NO.	DATE	BY	DESCRIPTION	APP. BY
1				
2				
3				
4				
5				

REVISIONS

INVENSYS RAIL CORPORATION

DES. : DL	DATE: 30-11-11	JOB NO. : PICA10336	
CKD. : MKN	ISSUE DATE: N/A	EST. NO. : 0DXP06156	
DRN. : DL	PLAN NO. : N/A	SHEET 10 OF 21	
P TIME: 16:14	P DATE: $$PLOT_DATE	CAD ID. : MTS-001.80-10	

INVENSYS RAIL CORP.
LOUISVILLE DIVISION, LOUISVILLE, KY