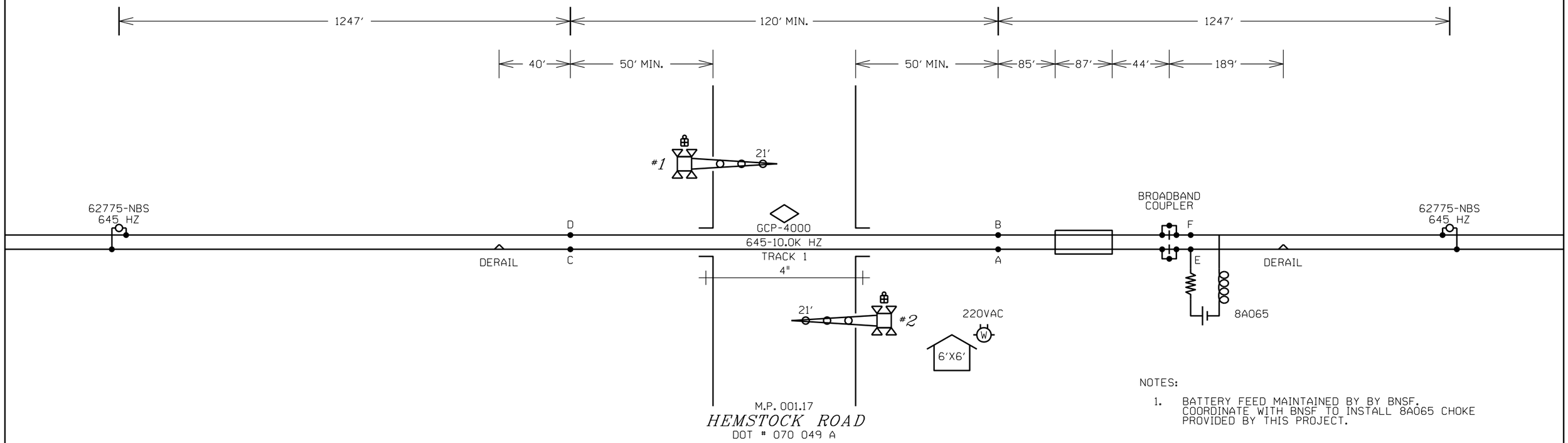

NOTES:

1. BATTERY FEED MAINTAINED BY BY BNSF. COORDINATE WITH BNSF TO INSTALL 8A065 CHOKE PROVIDED BY THIS PROJECT.

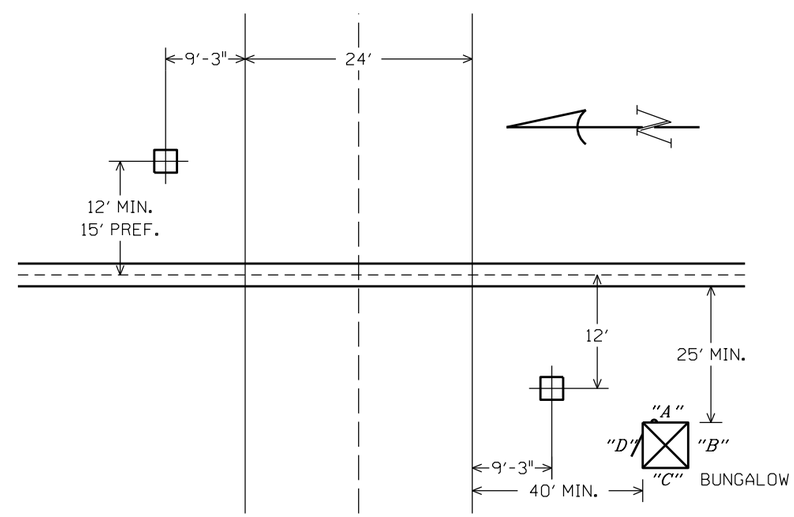

FOUNDATION PLACEMENT SKETCH
NOT TO SCALE

NOTES:

- -TEST TERMINAL
- -EQUALIZER
- -LINE ARRESTER
- -HEAVY DUTY ARRESTER
- -TWISTED WIRE 2 TURNS PER FOOT
- -CONNECTION TO REC./RTU

ALL WIRES #16 AWG UNLESS OTHERWISE NOTED

NOTES:

EQUIPMENT IS DESIGNED FOR 20 SECONDS MINIMUM WARNING TIME AT 25 MPH.
APPROACHES WERE LENGTHENED 0 SECOND(S) FOR WIDE OR ANGLED CROSSING (CT).
APPROACHES WERE LENGTHENED 0 SECOND(S) FOR ADDITIONAL GATE DELAY.
APPROACHES WERE LENGTHENED 10 SECONDS FOR SPEED VARIANCE AND BALLAST CHANGES (BT).
APPROACHES WERE LENGTHENED 0 SECONDS FOR SIMULTANEOUS PREEMPTION.
APPROACHES WERE LENGTHENED 0 SECONDS FOR ADVANCED PREEMPTION (APT).
APPROACHES WERE LENGTHENED 4 SECONDS FOR EQUIPMENT RESPONSE TIME (ERT).
ALL LAMPS TO BE LED
GATE LENGTH SHOWN IS MEASURED FROM MAST C/L TO GATE TIP.

ALL NEW

DESIGNED - -
XXXX
/ SEQ.#

ILLINOIS RAILWAY

TRACK & CROSSING LAYOUT
HEMSTOCK ROAD - ROCHELLE, IL

MP 001.17 | SH 01 OF 15

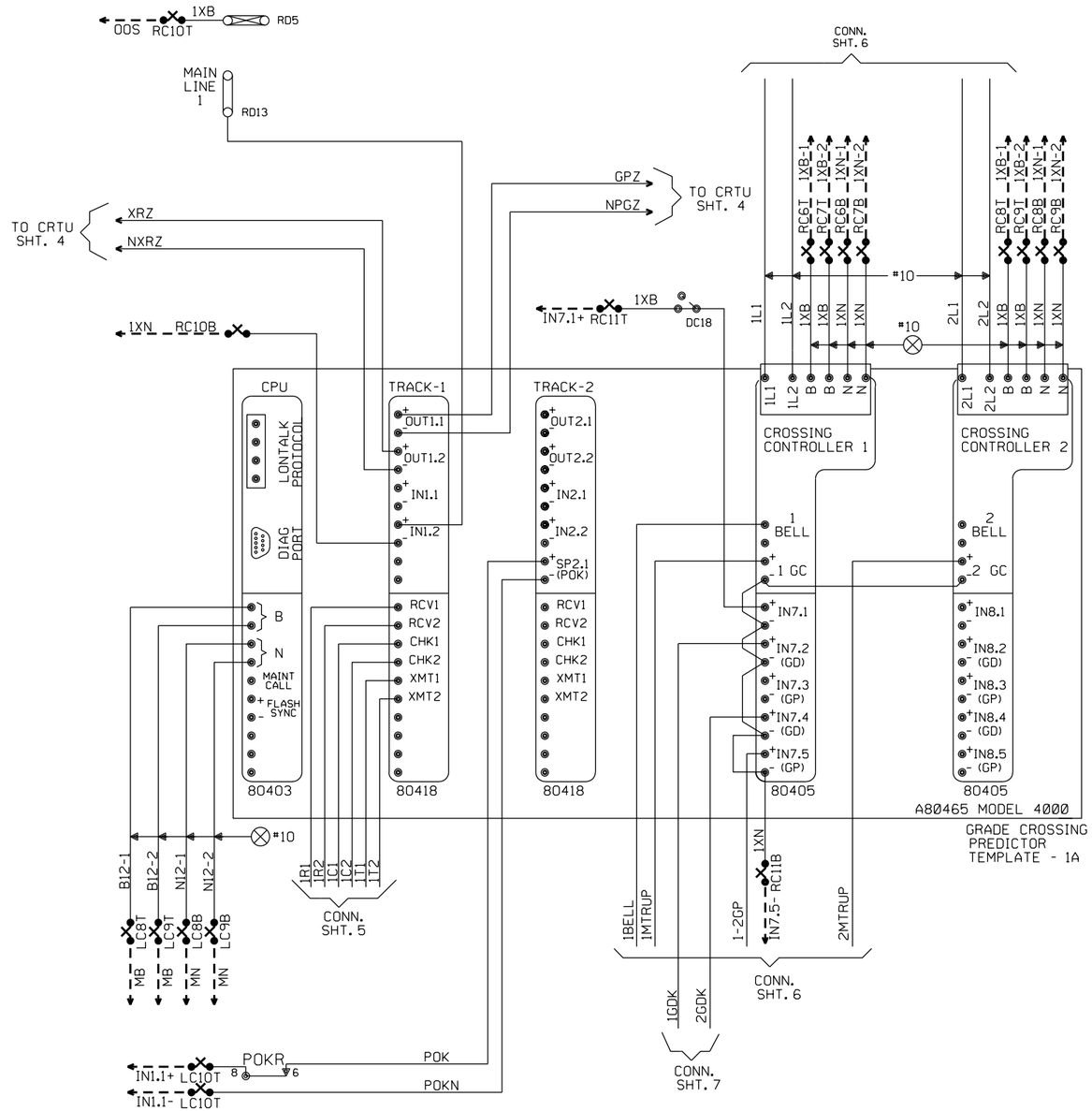

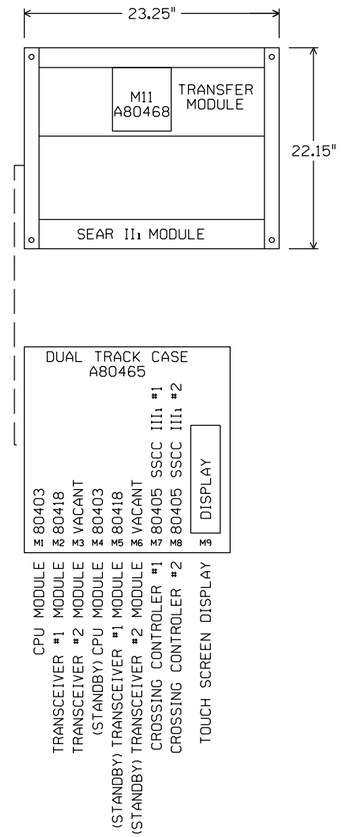

"Mf" FREQUENCY (HZ)	MAXIMUM TRANSMIT WIRE LENGTH (FEET)
86	100
114	125
156	150
211	200
285-970	250

NOTE:
EACH TRANSMITTER TO RAIL WIRE FROM XMT1 AND XMT2 MUST NOT EXCEED THE MAXIMUM LENGTH SPECIFIED IN THE TABLE SHOWN. THE RECEIVER WIRE LENGTH IS NOT CRITICAL. DOES NOT APPLY TO 6 TRACK WIRE APPLICATION.

ALL NEW

DESIGNED - - XXXX / SEQ.#

ILLINOIS RAILWAY

GCP 4000 & 2TC CIRCUITS
HEMSTOCK ROAD - ROCHELLE, IL

MP 001.17

SH 02 OF 15

Minimum Program Steps Report

Location and SIN

DOT Number: 070049A
Milepost Number: 001.17
Site Name: HEMSTOCK RD ROCHELLE, IL

SIN: 762010010016 *

* Parameter is part of office check number calculation.

MCF and Template Selection

MCF Name: GCP-T6X-02-4.mcf
MCF Revision: 24
MCFCRC: 09FC363B

Template = 1A:6 Trk Bi (OCCN) *

* Parameter is part of office check number calculation.

Minimum Program Steps

TEMPLATE: track 1-Bi, Island
Track 1 : GCP Frequency = 645 Hz (Field,TCN)
Track 1 : Approach Distance = 1247 ft (Set in Field,TCN)
Track 1 : Prime Warning Time = 30 sec (OCCN) *
Track 1 : GCP Transmit Level = Medium (Set in Field,TCN)
Track 1 : Isl Frequency = 10.0 kHz (Set in Field)

TEMPLATE: AND 1 XR
AND 1 Enable Used = Yes (OCCN) *

TEMPLATE: SSCC
SSCC 1 : Lamp Neutral Test = Off (Set in Field)
SSCC 2 : Lamp Neutral Test = Off (Set in Field)

TEMPLATE: OOS
OOS Control = Display+OOS IPs (OCCN) *
OOS Timeout = 1 hrs (Set in Field)

TEMPLATE: OP assignment 1
OUT 1.1 = NOT AND 7 (OCCN) *
OUT 1.2 = AND 1 XR (OCCN) *

TEMPLATE: IP assignment 1
IN 1.2 = Out Of Service IP 1 (OCCN) *

TEMPLATE: IP assignment SSCC
IN 7.1 = AND 1 XR Enable (OCCN) *

GCP: track 1
Track 1 : Island Distance = 124 ft (Set in Field,TCN)

AND: track Anding
AND 2 Used = Yes (OCCN) *
AND 3 Used = Yes (OCCN) *
AND 4 Used = Yes (OCCN) *
AND 5 Used = Yes (OCCN) *
AND 6 Used = Yes (OCCN) *
AND 7 Used = Yes (OCCN) *

AND: AND 2
AND 2 Enable Used = Yes (OCCN) *
AND 2 Enable Pickup = 0 sec (OCCN) *

AND: AND 3
AND 3 Enable Used = Yes (OCCN) *
AND 3 Enable Pickup = 0 sec (OCCN) *

AND: AND 4
AND 4 Enable Used = Yes (OCCN) *
AND 4 Enable Pickup = 0 sec (OCCN) *

AND: AND 5
AND 5 Enable Used = Yes (OCCN) *
AND 5 Enable Pickup = 0 sec (OCCN) *

AND: AND 6
AND 6 Enable Used = Yes (OCCN) *
AND 6 Enable Pickup = 0 sec (OCCN) *

AND: AND 7
AND 7 Enable Used = Yes (OCCN) *

ADVANCED: OR logic
OR 1 Used = Yes (OCCN) *

ADVANCED: OR 1
OR 1 Term 1 = AND 4 (OCCN) *
OR 1 Term 2 = AND 6 (OCCN) *

ADVANCED: internal I/O 1
Int.1 Sets = GD 1.1 (OCCN) *
Int.1 Set by = AND 2 (OCCN) *
Int.2 Sets = GD 1.2 (OCCN) *
Int.2 Set by = AND 2 (OCCN) *
Int.3 Sets = AND 3 Enable (OCCN) *
Int.3 Set by = NOT AND 1 XR (OCCN) *
Int.4 Sets = AND 2 Enable (OCCN) *
Int.4 Set by = AND 4 (OCCN) *

ADVANCED: internal I/O 2
Int.5 Sets = AND 3 Enable (OCCN) *
Int.5 Set by = AND 4 (OCCN) *
Int.6 Sets = GP 1.1 (OCCN) *
Int.6 Set by = NOT AND 5 (OCCN) *
Int.7 Sets = AND 1 XR Enable (OCCN) *
Int.7 Set by = AND 6 (OCCN) *
Int.8 Sets = AND 5 Enable (OCCN) *
Int.8 Set by = AND 6 (OCCN) *

ADVANCED: internal I/O 3
Int.9 Sets = AND 7 Enable (OCCN) *
Int.9 Set by = OR 1 (OCCN) *

ADVANCED: site options
Daylight Savings = Off (Set in Field)

* Parameter is part of office check number calculation.

Check Numbers

Office Check Number: 5EE022AF
Config. Check Number: 5FFC602D
(Based on MCF Revision 24)

Parameters not part of office check number calculation:

Track 1 : GCP Frequency = 645 Hz
Track 1 : Approach Distance = 1247 ft (Set in Field)
Track 1 : GCP Transmit Level = Medium (Set in Field)
Track 1 : Isl Frequency = 10.0 kHz
SSCC 1 : Lamp Neutral Test = Off (Set in Field)
SSCC 2 : Lamp Neutral Test = Off (Set in Field)
OOS Timeout = 1 hrs (Set in Field)
Track 1 : Island Distance = 124 ft (Set in Field)
Daylight Savings = Off (Set in Field)

Comments

<none>

Configuration Package File

Filename: HEMSTOCK-070049A.pac
Path: P:\DRAWINGS\PROJECTS\OmniTrax\Illinois Railway\IR___001.17_Hemstock Rd_A\
Date/Time: 6/24/2013 16:40:15
DT Version: 5.3.3

ALL NEW

DESIGNED - -
XXXX
SEQ.#

ILLINOIS RAILWAY

GCP4000 PROGRAMMING
HEMSTOCK ROAD - ROCHELLE, IL

MP 001.17

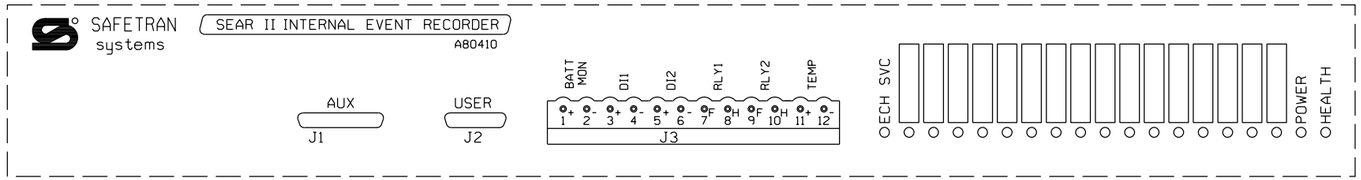

ALL NEW

DESIGNED - -
XXXX
/ SEQ.#

ILLINOIS RAILWAY

SEAR II INTERNAL
HEMSTOCK ROAD - ROCHELLE, IL

MP 001.17

SH 03 OF 15

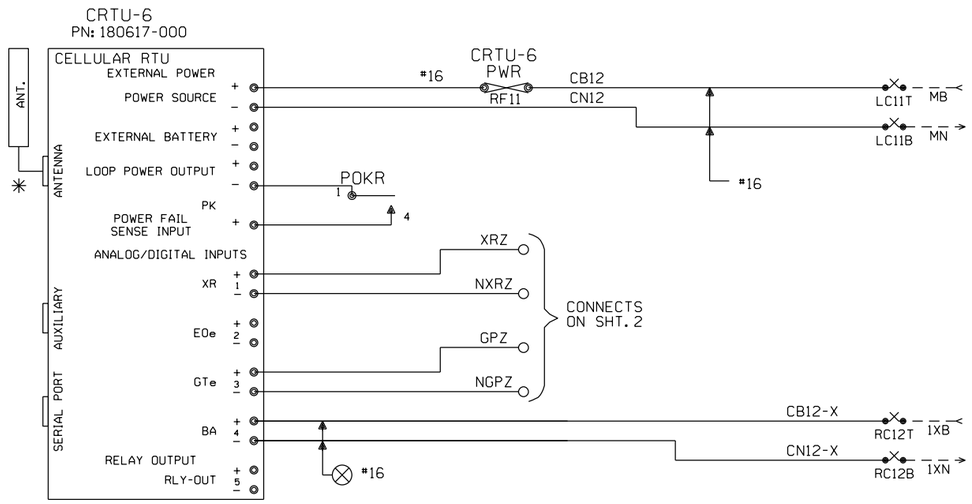

MOUNT CRTU AT LEAST 18" AWAY FROM HIGH VOLTAGE POWER SOURCES

CHART INDICATES NORMAL STATE

DIGITAL INPUT HIGH, OR POWER FAIL INPUT CLOSED

DIGITAL INPUT LOW, OR POWER FAIL INPUT OPEN

LATCH IS SET BECAUSE CRTU DETECTED AN ALARM CONDITION

L

12.06V L

'sRUN MODE' 'sRUN MODE-SILENT'

CRTU RADIO IS DISABLED. REPROGRAM CRTU WITH LAPTOP.

ANALOG AND AC INPUT MODULES AND SURGE PROTECTORS MUST BE MOUNTED LESS THAN 18" FROM CRTU

CRTU CH4 CAN BE CONNECTED TO EITHER SP18 OR EQUIPMENT SIDE OF MDSA1, TAB 565

UNIT INSTALLATION AND SETUP

R.R. SITE ID WHERE: SSSS = 4 CHARACTER SUBDIVISION ID. FILL WITH PRECEDING ZEROS AS REQUIRED. THE MAIN TRACK SUBDIVISION ID" IS IN THE CURRENT TIMETABLE. INDUSTRIAL LEADS, LEASED, AND LEAD TRACKS LISTED WITHIN THE SUBDIVISION MAY HAVE THEIR OWN UNIQUE SUBDIVISION ID". ALWAYS REFER TO CURRENT PRINTED COPY OF THE TIMETABLE.
LLLLLLLL = 8 CHARACTERS USE DOT" AT CROSSINGS, AND
WDLLLLLL = USE 'WD' THEN MP" AT WAYSIDE LOCATIONS.
EXAMPLE = 0785WD1801.5UT
HBLLLLLL = USE 'HB' THEN MP" AT HBD SITES.
EXAMPLE = 0100-HB55.62TX
THE MP" MUST USE A DECIMAL POINT TO SEPARATE NUMBERS.
FILL WITH PRECEDING DASHES AS REQUIRED.
AA = 2 CHARACTER STATE NAME FOR ALL LOCATIONS.
MUST BE 14 CHARACTERS LONG, NO SPACES ALLOWED.

SITE IDENTIFIER: SSSSLLLLLLLLAA	SSSSLLLLLLLLAA
OPERATION TO RESUME: RUN	
SIGNAL STRENGTH dBm	
CARRIER ID	
FIRMWARE VERSION	2.3.
SERIAL NUMBER	
BOOT VERSION:	
CMM VERSION:	
MIN ASSIGNMENT	
ESN: (MICROBURST ONLY)	
CONFIGURATION NET	CELLEMETRY MICROBURST
SILENCE INTERVAL	60 MINUTES
HEALTHCHECK INTERVAL	EVERY 2 DAYS
ALARM DEFER DELAY	240 MINUTES (4 HOURS)
SIGNAL STATUS	
SCADANET STATUS	
CALIBRATION CONSTANT CH1	
CALIBRATION CONSTANT CH2	
CALIBRATION CONSTANT CH3	
CALIBRATION CONSTANT CH4	
CALIBRATION CONSTANT PS	

FIELD PROVIDES: SAMPLED NOMINAL VOLTAGES, SCADANET STATUS CALIBRATION CONSTANTS, SERIAL NUMBER, AND SIGNAL STATUS.

CHANNEL SETUP - STANDARD CONFIGURATION 32:XR,EOe,GTe,Ba

CHANNEL NORMAL STATE	SENSE (NO/NC)	NAME FUNCTION	RECOGNITION DELAY SECONDS ACTIVE	RECOGNITION DELAY SECONDS NORMAL	RETURN TO NORMAL	REPORTING MODE	ALARM LINKED CHANNEL	ALARM LINKED CRITERIA	EVENT LOGGING ENABLED OPTIONS
POWER FAIL (CH5) ■	POWER FAIL DETECT NO	PF1n-PK AC POWER FAIL	7,200 ALARM	300 NORMAL	ENABLED	ALERT	DISABLED	N/A	ANALOG VALUE SENT
CH1 ■	DIGITAL INPUT NC	CH1-XR XR DOWN TO LONG	1,800 ALARM	1 NORMAL	ENABLED	ALERT	DISABLED	N/A	
CH2 □	DIGITAL INPUT NO	CH2-EOe LIGHT OUT	120 ALARM	10 NORMAL	ENABLED	ALERT	DISABLED	N/A	
CH3 ■	DIGITAL INPUT NC	CH3-GTe GATES NOT UP/DOWN	30 ALARM	1 NORMAL	ENABLED	ALERT	DISABLED	N/A	DIGITAL EVENTS
CH4 STORED NOMINAL VOLTAGE	ANALOG INPUT N/A	CH4-Ba/V BATTERY MONITOR BATTERY LOW	600 ALARM	1200 NORMAL	ENABLED	ALERT W/UPDATE	DISABLED	N/A	PF1n-PK CH1-XR CH2-EOe CH3-GTe
POWER SOURCE (CH6)	ANALOG INPUT N/A	PS-Ba/V BATTERY MONITOR BATTERY LOW	600 ALARM	1200 NORMAL	ENABLED	ALERT W/UPDATE	DISABLED	N/A	

ANALOG CHANNEL	USEFUL RANGE VOLTS LOW	USEFUL RANGE VOLTS HIGH	DISPLAYED RANGE VOLTS LOW	DISPLAYED RANGE VOLTS HIGH	RELATIVE ALARM POINT LOW	RELATIVE ALARM POINT HIGH	ABSOLUTE ALARM POINT LOW	ABSOLUTE ALARM POINT HIGH	AUTOMATIC UPDATE INTERVAL	STORED NOMINAL VOLTAGE	SAMPLED NOMINAL VOLTAGE
CH4	0.0	30.00	0.0	30.00	81%	120%	10.0	29.0	14 DAYS	12.69	
POWER SOURCE	0.0	30.00	0.0	30.00	81%	120%	10.0	29.0	14 DAYS	12.69	

RELAY OUTPUT	NAME RLY-OUT	ACTIVE SET-UP-OPEN	NORMAL CLR-DN-CLOSE	PULSE DURATION	15 SECONDS	StdCfg Ver: 2.3.3 REV'D 9-20-02

MAINTENANCE OPERATIONS

TO START OR ABORT ANY PROCEDURE

1. PRESS THE 'CANCEL' BUTTON FIRST

WHEN RESPONDING TO A CALL, PUT THE CRTU IN THE 'SILENCE ALARMS' MODE

1. PRESS 'SELECT' AND THEN '+ ARROW' BUTTON UNTIL
   DISPLAY: ACTION?
   SILENCE ALARMS
2. PRESS THE 'SELECT' BUTTON TWICE
3. CORRECT PROBLEM AND SIMULATE NORMAL TRAIN MOVEMENT THROUGH THE LOCATION
4. EXAMINE EACH CHANNEL ON THE CRTU
5. PRESS THE '+/- ARROW' BUTTON
   VERIFY ALL CHANNELS INDICATE A NORMAL STATE
NORMAL STATES ARE ON THE CHANNEL SETUP CHART

CLEAR TIMERS, LATCHES AND SEND ALL NORMAL

1. DO STEPS #1 - #5 ABOVE, AND PRESS 'CANCEL'.
2. PRESS 'SELECT' AND THEN '- ARROW' BUTTON UNTIL
   DISPLAY: ACTION?
   SERVICE MODE
3. PRESS 'SELECT' AGAIN TO RESET TIMERS, AND IF
   DISPLAY: SERVICE MODE
   ALL NORMAL
4. PRESS 'SELECT' AGAIN TO CLEAR LATCHES, AND SEND ALL NORMAL. SKIP STEPS #5-#6.
5. HOWEVER, IF ALARMS ARE NOT CLEARED;
   DISPLAY: SERVICE MODE
   ALARMS PENDING/PRESENT
6. PRESS 'CANCEL', CORRECT PROBLEM AND REPEAT STEPS #2 THRU #5 UNTIL ALL NORMAL SENT.

TO CANCEL THE 'SILENCE ALARMS' MODE

1. PRESS 'SELECT' AND THEN '+ ARROW' BUTTON UNTIL
   DISPLAY: ACTION?
   CANCEL SILENCE
2. PRESS THE 'SELECT' BUTTON AGAIN

EXAMINE & SET BATTERY VOLTAGE NOMINAL VALUE

1. PRESS THE '+ ARROW' OR '- ARROW' BUTTON UNTIL THE DESIRED CHANNEL IS DISPLAYED.
   DISPLAY: PS-Ba:
   13.83V NORMAL
2. VERIFY THE DISPLAYED READING WITH A DIGITAL VOLTMETER
3. PRESS THE 'SELECT' BUTTON, AND THE CRTU DISPLAY WILL SWITCH BETWEEN CURRENT/SAVED NOMINAL VOLTAGE VALUES.
   DISPLAY: NOMINAL ON #6? (CURRENT)
   13.83
   DISPLAY: SAVED NOMINAL 6 (STORED)
   12.69
4. PRESS THE 'SELECT' BUTTON AND THE CURRENT OR 'NOMINAL ON' VALUE WILL BE SAMPLED AND STORED AS THE 'SAVED NOMINAL' VALUE
5. VERIFY THE 'NOMINAL ON' AND 'SAVED NOMINAL' VALUES ARE EQUIVALENT, REPEAT STEPS #1 THRU #3 & PRESS THE 'CANCEL' BUTTON.

ROCHELLE, IL
HEMSTOCK ROAD
M.P. 001.17
D.O.T.#070049A

ALL NEW

DESIGNED - -
XXXX
SEQ.#

ILLINOIS RAILWAY

MICROAIDE CAR-14 CIRCUITS
HEMSTOCK ROAD - ROCHELLE, IL

MP 001.17 SH 04 OF 15

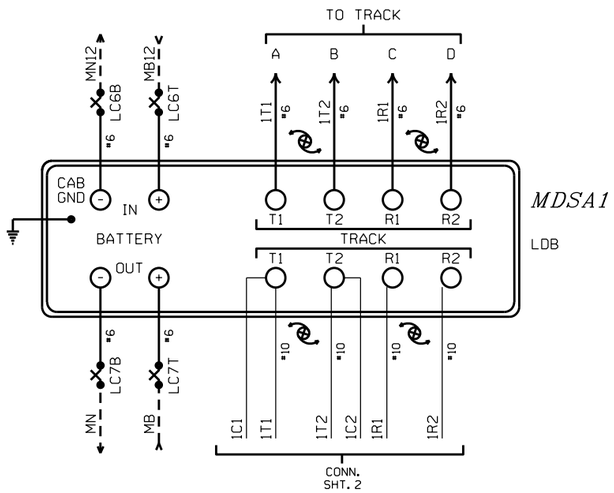

ALL NEW

DESIGNED - -
XXXX
/ SEQ.#

ILLINOIS RAILWAY

MDSA-1 CIRCUIT WIRING
HEMSTOCK ROAD - ROCHELLE, IL

MP 001.17

SH 05 OF 15

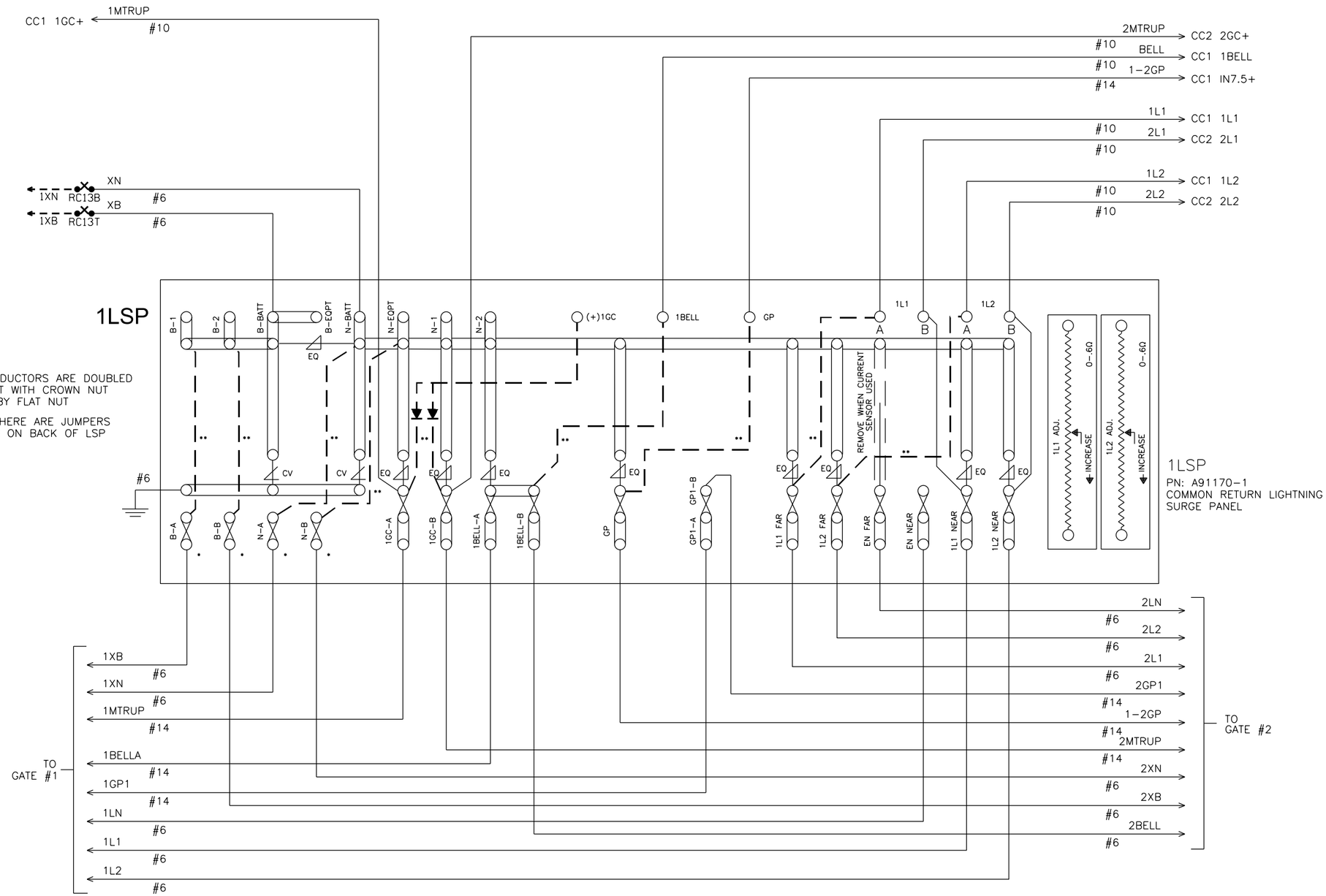

* = WHERE CONDUCTORS ARE DOUBLED DOUBLE NUT WITH CROWN NUT FOLLOWED BY FLAT NUT

** = INDICATES THERE ARE JUMPERS AND DIODES ON BACK OF LSP

NOTE: ALL WIRING THIS SHEET #14 AWG UNLESS NOTED OTHERWISE.

ALL NEW

DESIGNED - - XXXX / SEQ.#

ILLINOIS RAILWAY

LSP CIRCUIT
HEMSTOCK ROAD - ROCHELLE, IL

MP 001.17

SH 06 OF 15

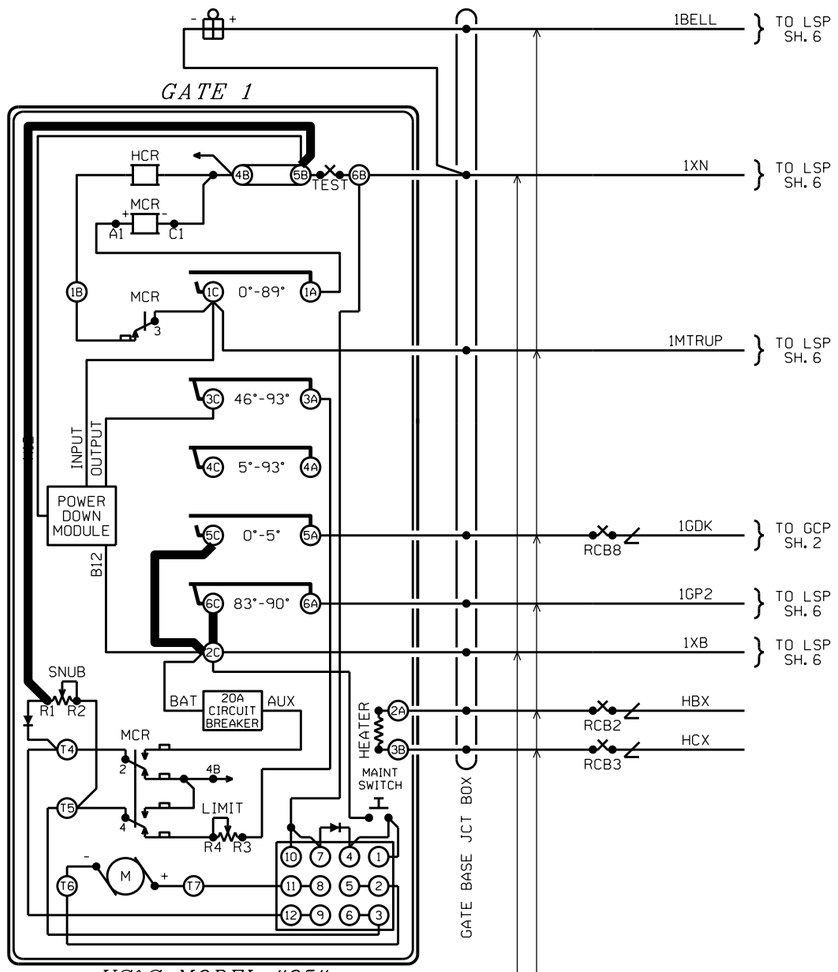

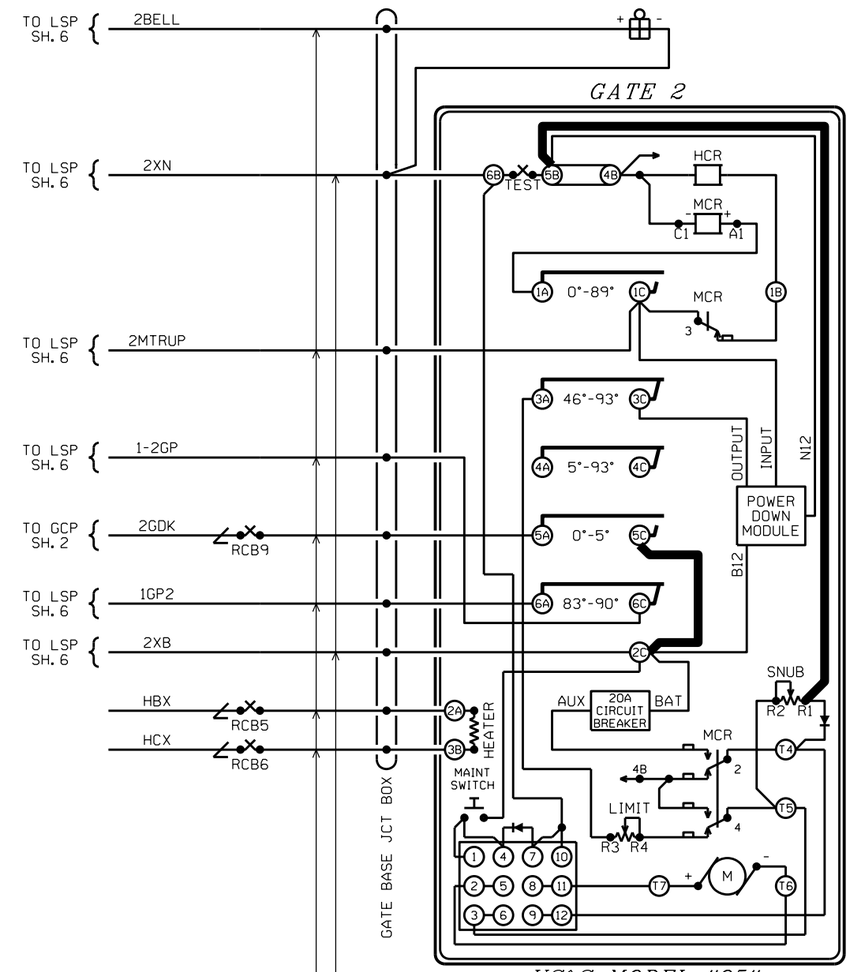

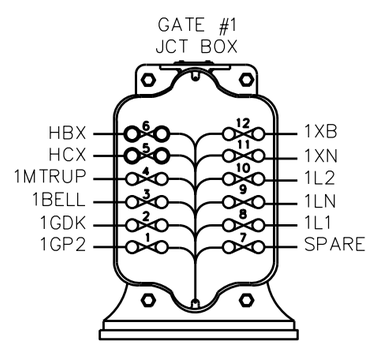

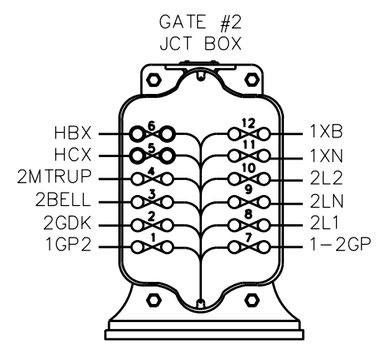

ALL NEW

DESIGNED - - XXXX / SEQ.#

ILLINOIS RAILWAY

GATES 1 & 2 CIRCUITS
HEMSTOCK ROAD - ROCHELLE, IL

MP 001.17

SH 07 OF 15

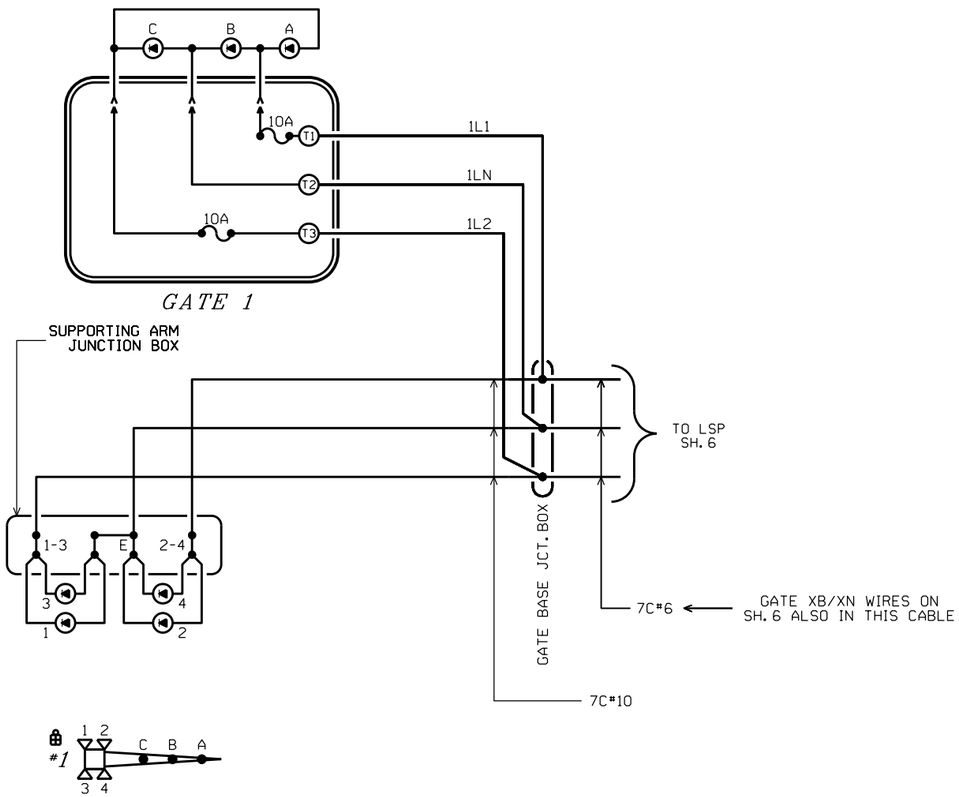

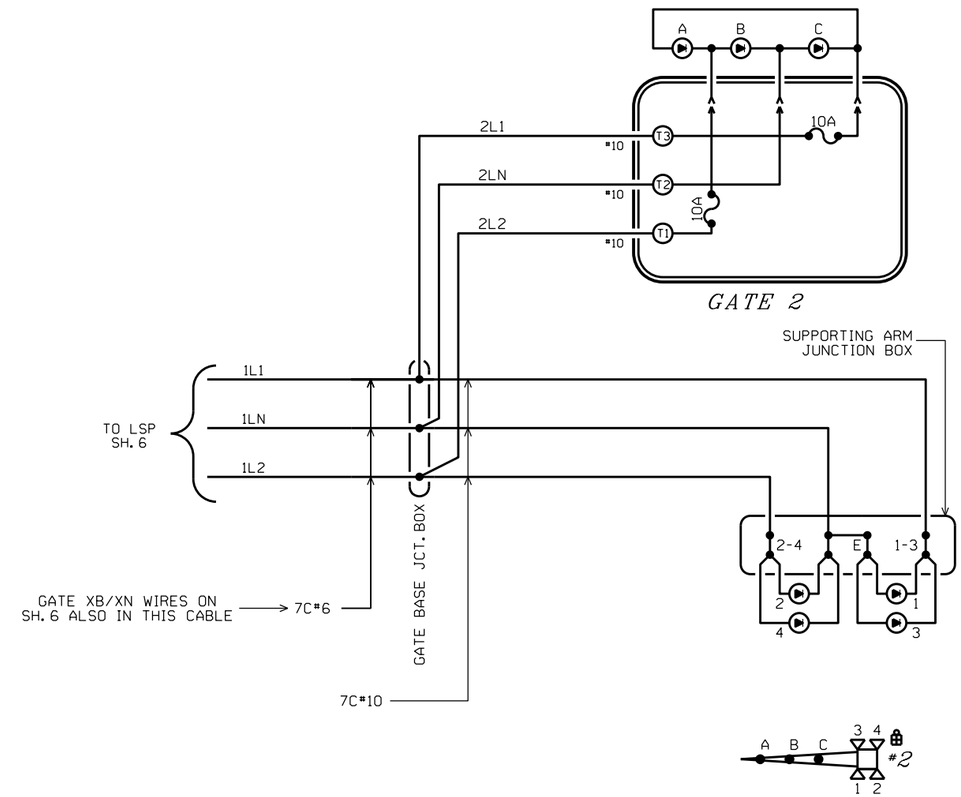

ALL NEW

DESIGNED - -
XXXX
SEQ.#

ILLINOIS RAILWAY

FLASHERS 1 & 2 CIRCUITS
HEMSTOCK ROAD - ROCHELLE, IL

MP 001.17

SH 08 OF 15

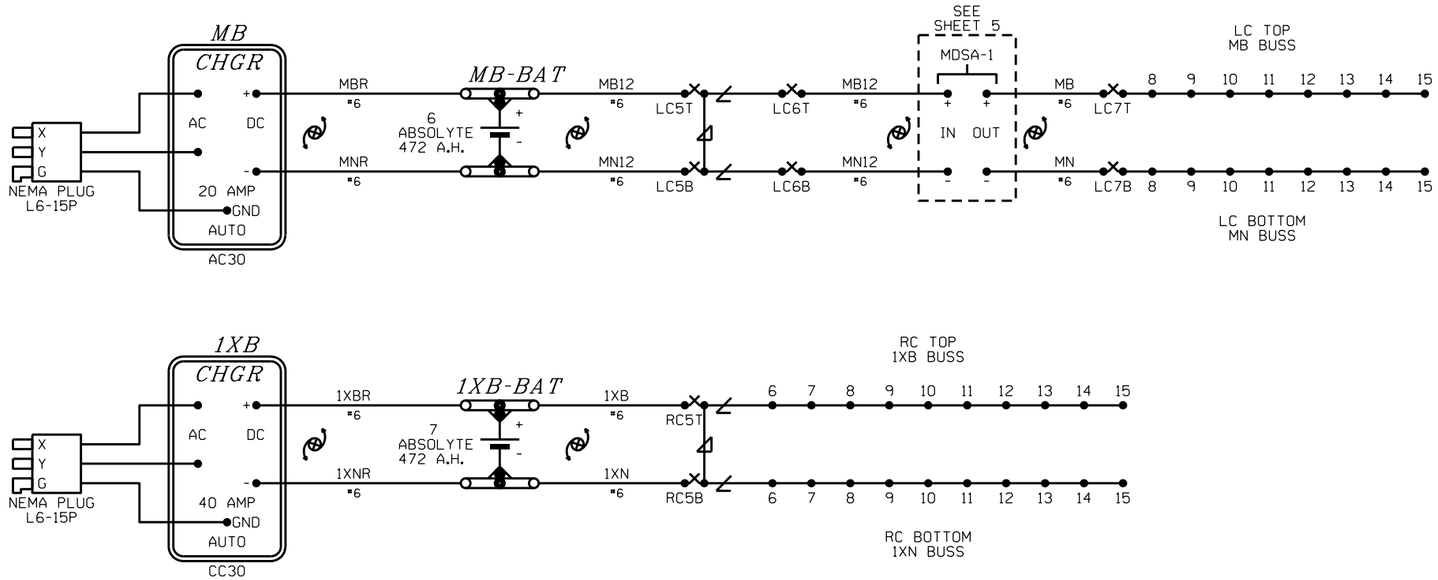

ALL NEW

DESIGNED - -
XXXX
/ SEQ."

ILLINOIS RAILWAY

BATTERY CHARGING CIRCUITS
HEMSTOCK ROAD - ROCHELLE, IL

MP 001.17

SH 09 OF 15

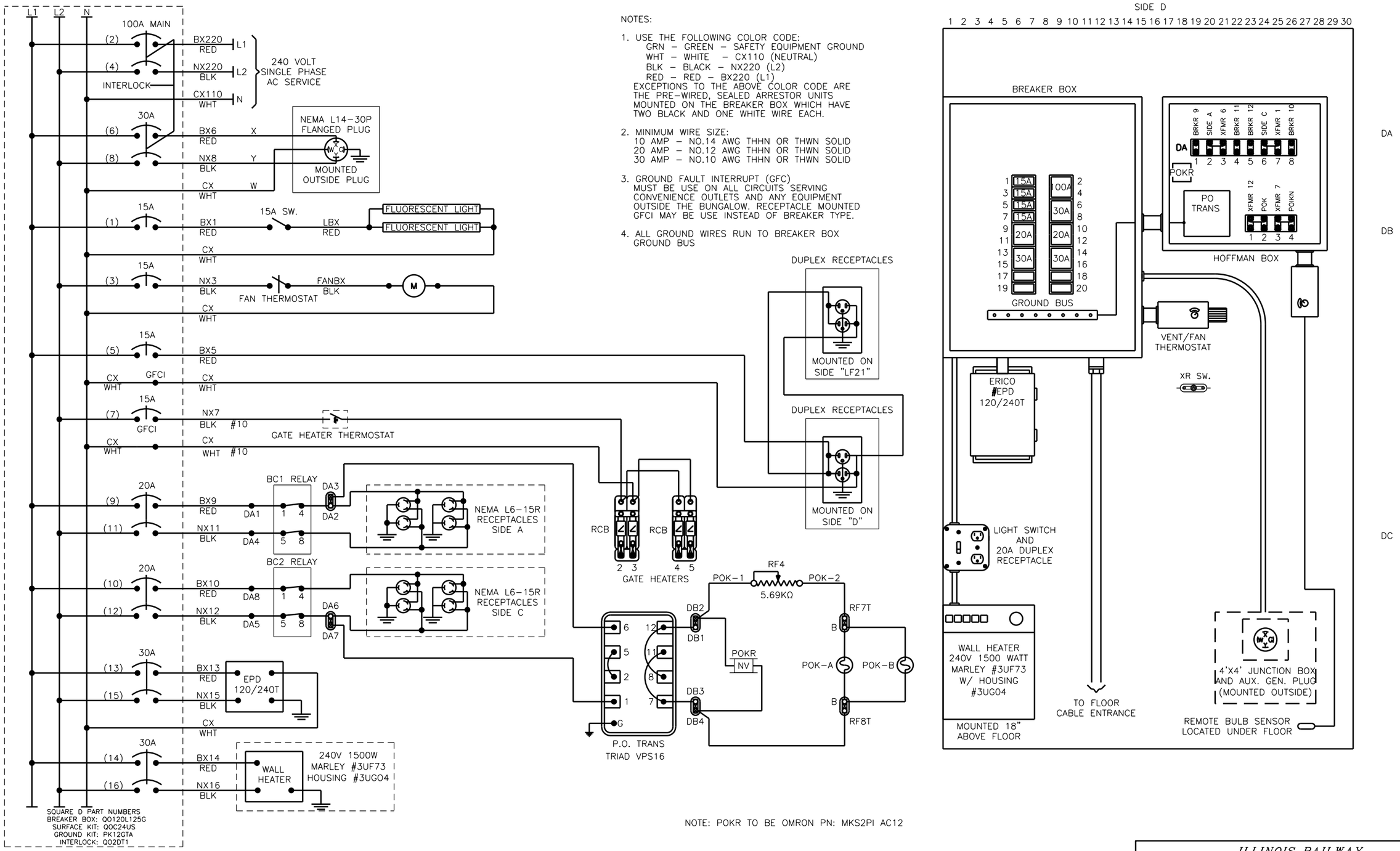

NOTES:

1. USE THE FOLLOWING COLOR CODE:
   GRN – GREEN – SAFETY EQUIPMENT GROUND
   WHT – WHITE – CX110 (NEUTRAL)
   BLK – BLACK – NX220 (L2)
   RED – RED – BX220 (L1)
   EXCEPTIONS TO THE ABOVE COLOR CODE ARE THE PRE-WIRED, SEALED ARRESTOR UNITS MOUNTED ON THE BREAKER BOX WHICH HAVE TWO BLACK AND ONE WHITE WIRE EACH.
2. MINIMUM WIRE SIZE:
   10 AMP – NO.14 AWG THHN OR THWN SOLID
   20 AMP – NO.12 AWG THHN OR THWN SOLID
   30 AMP – NO.10 AWG THHN OR THWN SOLID
3. GROUND FAULT INTERRUPT (GFC) MUST BE USE ON ALL CIRCUITS SERVING CONVENIENCE OUTLETS AND ANY EQUIPMENT OUTSIDE THE BUNGALOW. RECEPTACLE MOUNTED GFCI MAY BE USE INSTEAD OF BREAKER TYPE.
4. ALL GROUND WIRES RUN TO BREAKER BOX GROUND BUS

NOTE: POKR TO BE OMRON PN: MKS2PI AC12

ALL NEW

DESIGNED - - XXXX / SEQ.#

ILLINOIS RAILWAY

POWER DISTRIBUTION
HEMSTOCK ROAD - ROCHELLE, IL

MP 001.17

SH 10 OF 15

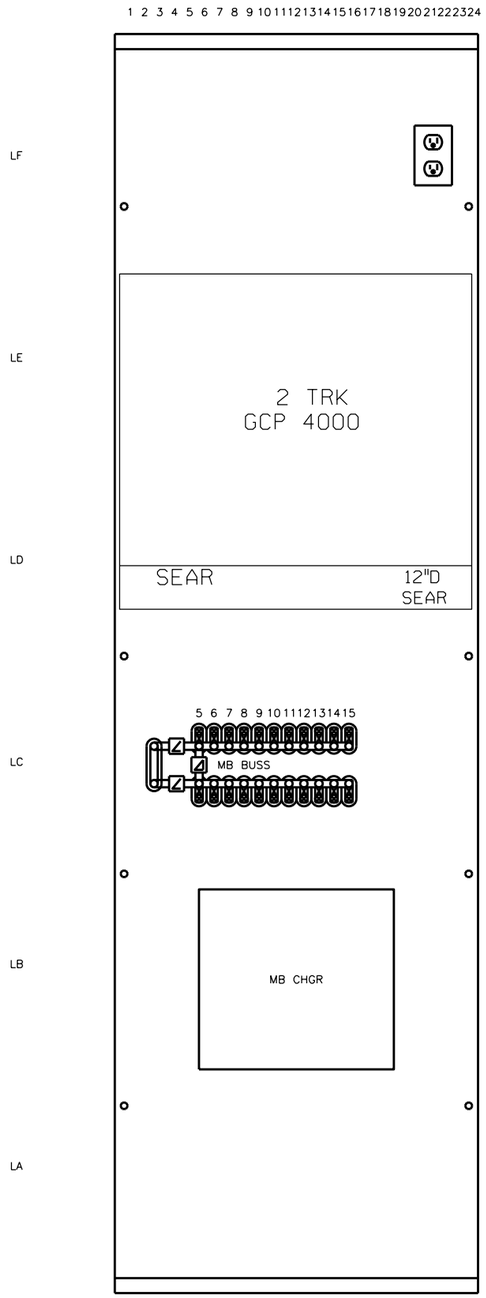

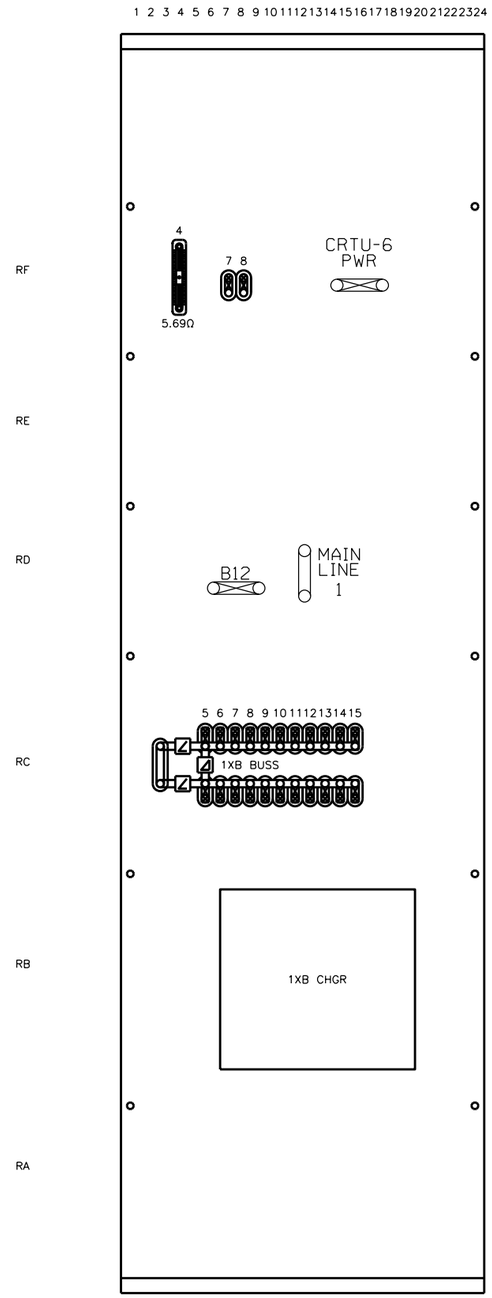

SIDE 'B' FRONT

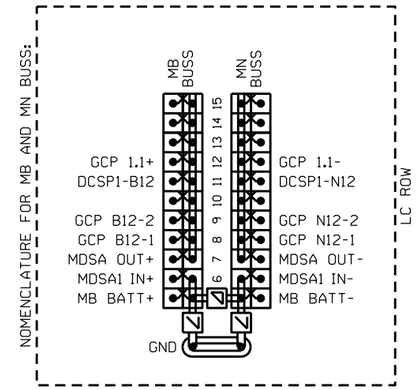

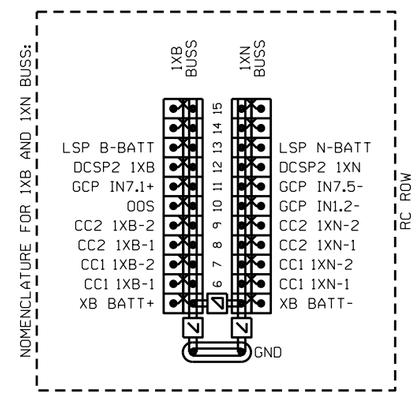

ALL NEW

DESIGNED - -
XXXX
/ SEQ.#

ILLINOIS RAILWAY

TERMINAL BOARD LAYOUT
HEMSTOCK ROAD - ROCHELLE, IL

MP 001.17

SH 11 OF 15

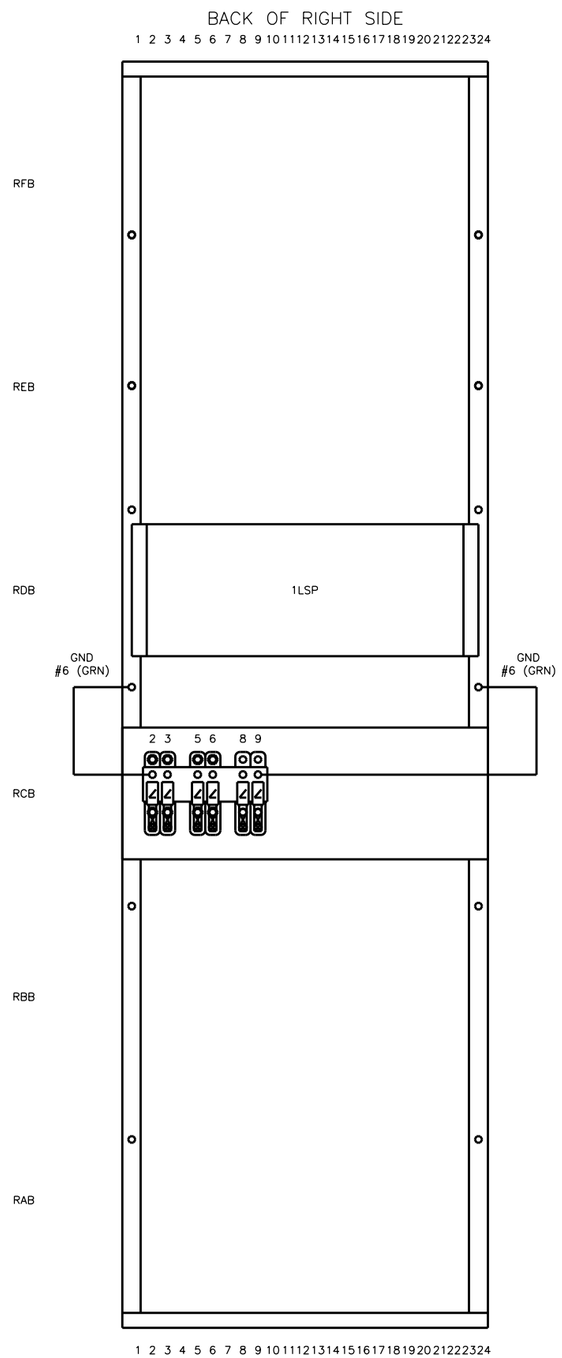

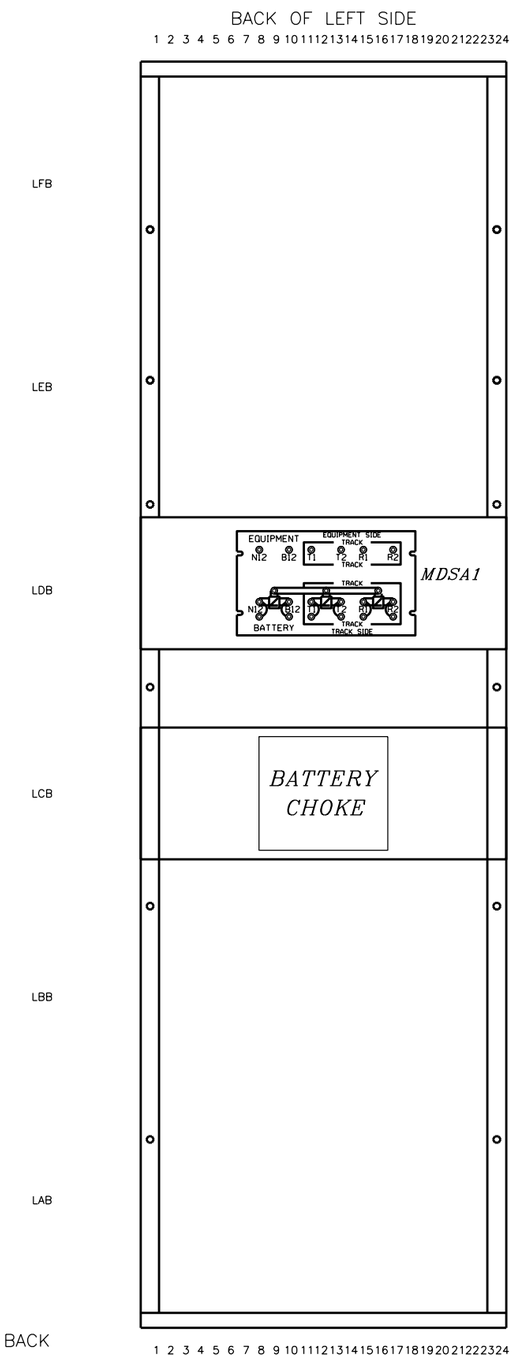

SIDE 'B' BACK

ALL NEW

ILLINOIS RAILWAY	
SIDE "B" BACK RACK LAYOUT HEMSTOCK ROAD - ROCHELLE, IL	
DESIGNED - - XXXX / SEQ.#	MP 001.17 SH 12 OF 15

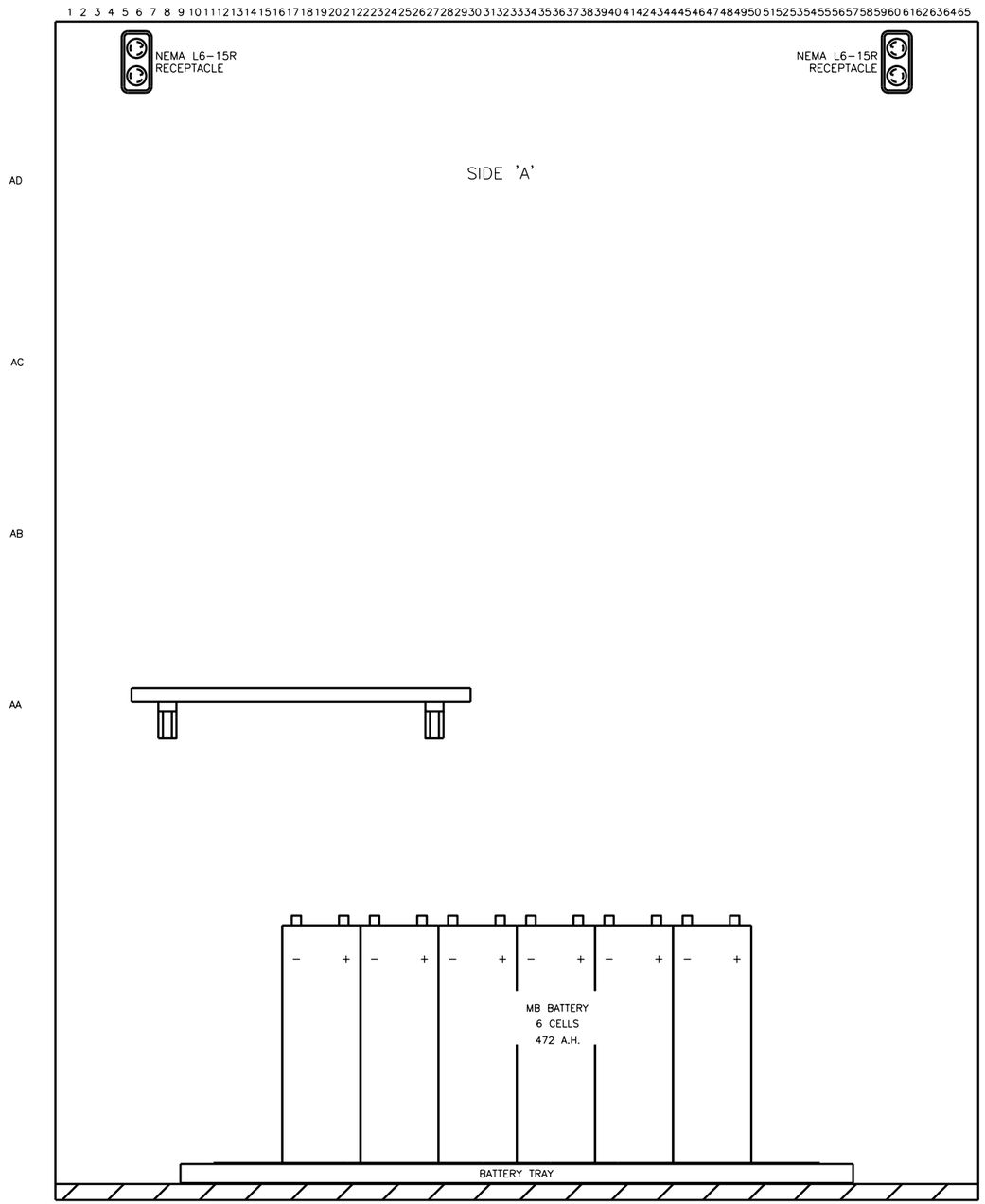

ALL NEW

DESIGNED - -
XXXX
/ SEQ.#

ILLINOIS RAILWAY

SIDE "A" SHELF LAYOUT
HEMSTOCK ROAD - ROCHELLE, IL

MP 001.17

SH 13 OF 15

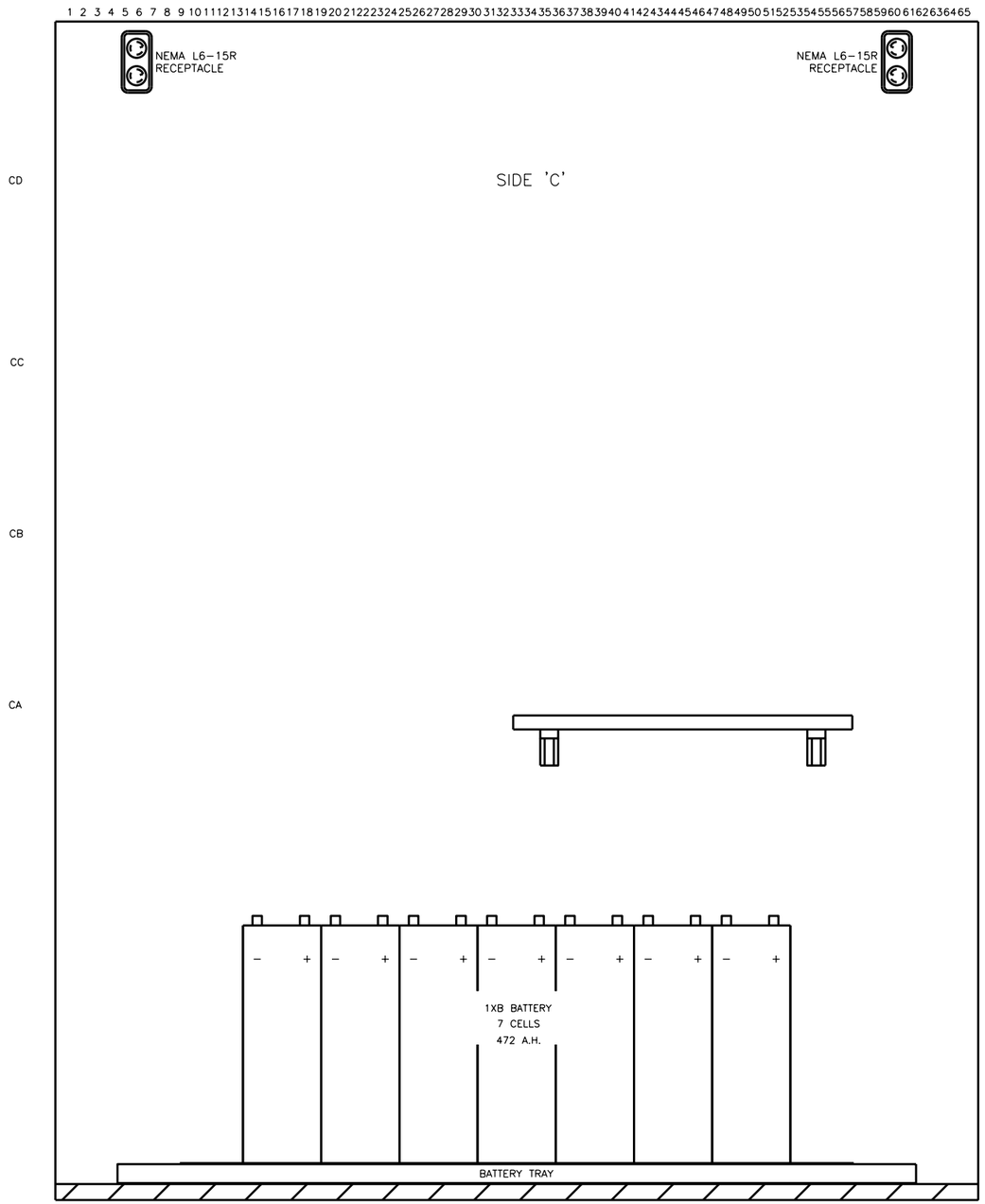

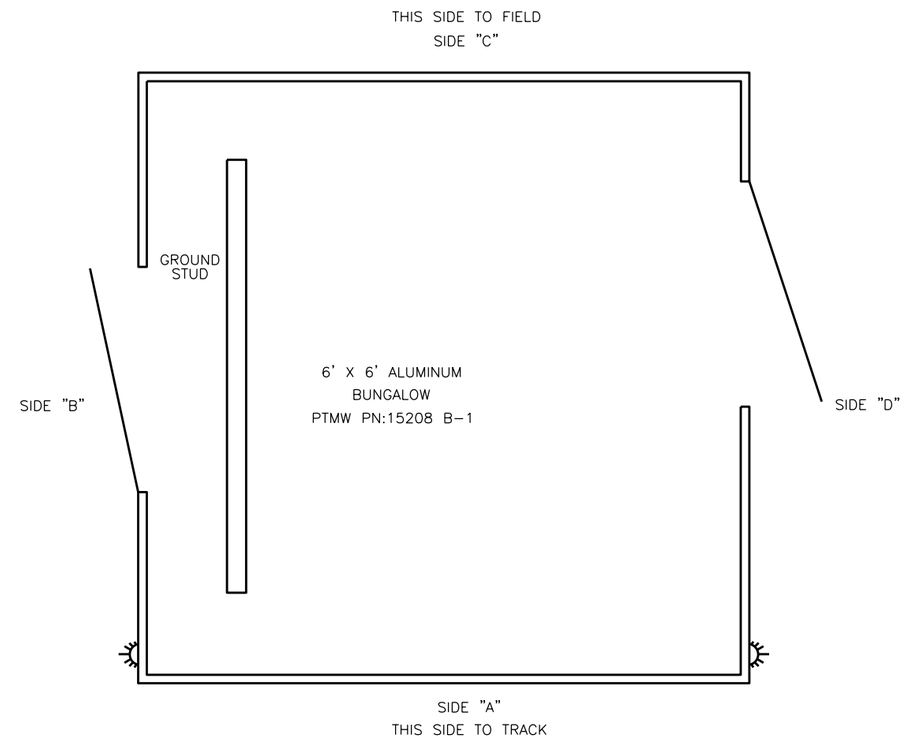

ALL NEW

DESIGNED - -
XXXX
SEQ.#

ILLINOIS RAILWAY

SIDE "C" SHELF LAYOUT
HEMSTOCK ROAD - ROCHELLE, IL

MP 001.17

SH 14 OF 15

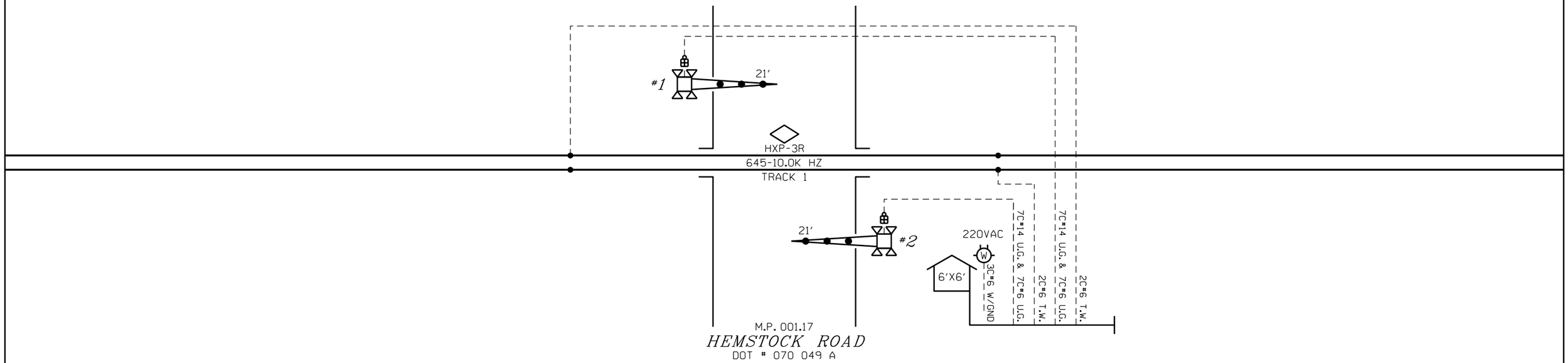

ALL NEW

DESIGNED - -
XXXX
/ SEQ.#

ILLINOIS RAILWAY

CABLE LAYOUT
HEMSTOCK ROAD - ROCHELLE, IL

MP 001.17

SH 15 OF 15