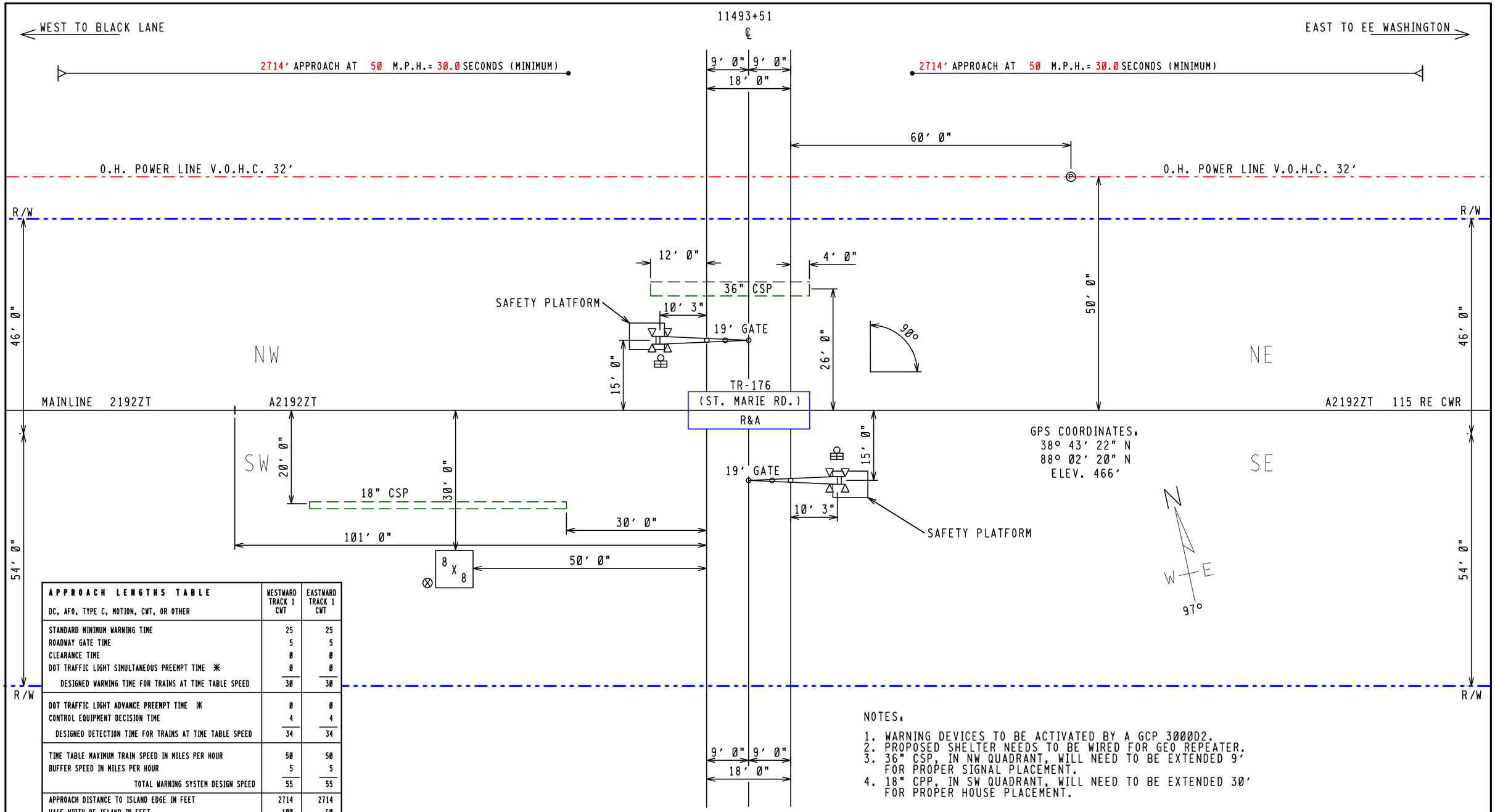

APPROACH LENGTHS TABLE DC, AFO, TYPE C, MOTION, CWT, OR OTHER	WESTWARD TRACK 1 CWT	EASTWARD TRACK 1 CWT
STANDARD MINIMUM WARNING TIME	25	25
ROADWAY GATE TIME	5	5
CLEARANCE TIME	0	0
DOT TRAFFIC LIGHT SIMULTANEOUS PREEMPT TIME ✳	0	0
DESIGNED WARNING TIME FOR TRAINS AT TIME TABLE SPEED	30	30
DOT TRAFFIC LIGHT ADVANCE PREEMPT TIME ✳	0	0
CONTROL EQUIPMENT DECISION TIME	4	4
DESIGNED DETECTION TIME FOR TRAINS AT TIME TABLE SPEED	34	34
TIME TABLE MAXIMUM TRAIN SPEED IN MILES PER HOUR	50	50
BUFFER SPEED IN MILES PER HOUR	5	5
TOTAL WARNING SYSTEM DESIGN SPEED	55	55
APPROACH DISTANCE TO ISLAND EDGE IN FEET	2714	2714
HALF WIDTH OF ISLAND IN FEET	100	60
APPROXIMATE MILE POSTS FOR APPROACH CIRCUIT	218.21	217.15

NOTES:

1. WARNING DEVICES TO BE ACTIVATED BY A GCP 3000D2.
2. PROPOSED SHELTER NEEDS TO BE WIRED FOR GEO REPEATER.
3. 36" CSP, IN NW QUADRANT, WILL NEED TO BE EXTENDED 9' FOR PROPER SIGNAL PLACEMENT.
4. 18" CPP, IN SW QUADRANT, WILL NEED TO BE EXTENDED 30' FOR PROPER HOUSE PLACEMENT.

FILE NAME: BC21768.H01	REVISION DATES	PRODUCED FOR:	PRODUCED BY:	LEGEND	GUARD RAIL	METER SERVICE ⊗	STREET NAME: TR-176 (ST. MARIE RD.)	
DATE DRAWN: 05/08/2013	05-17-2013 JWB	CSX TRANSPORTATION	invensys Rail	CSX ROW	O.H. POWER	POLE Ⓟ	CITY & STATE: OLNEY, IL	
DRAWN BY: MILLER, ROBERT	05-30-2013 GRN	RAIL TRANSPORT GROUP ENGINEERING	7775 BAYMEADOWS WAY	R/R POLELINE	FENCE	FIRE PLUG Ⓕ	PROJECT #: IL2013014	PROPOSED CROSSING LAYOUT
CHECKED BY: WILTSIE, JOE	- -	COMMUNICATIONS AND SIGNALS	SUITE 250	GAS	WATER	SEWER CAP Ⓢ	OP #: IL0397	1"=20'
SSC #: JXXD03664	- -		JACKSONVILLE, FL 32256	FIBER OPTIC	SEWER	GAS VENT Ⓥ	DOT #: 152861W	

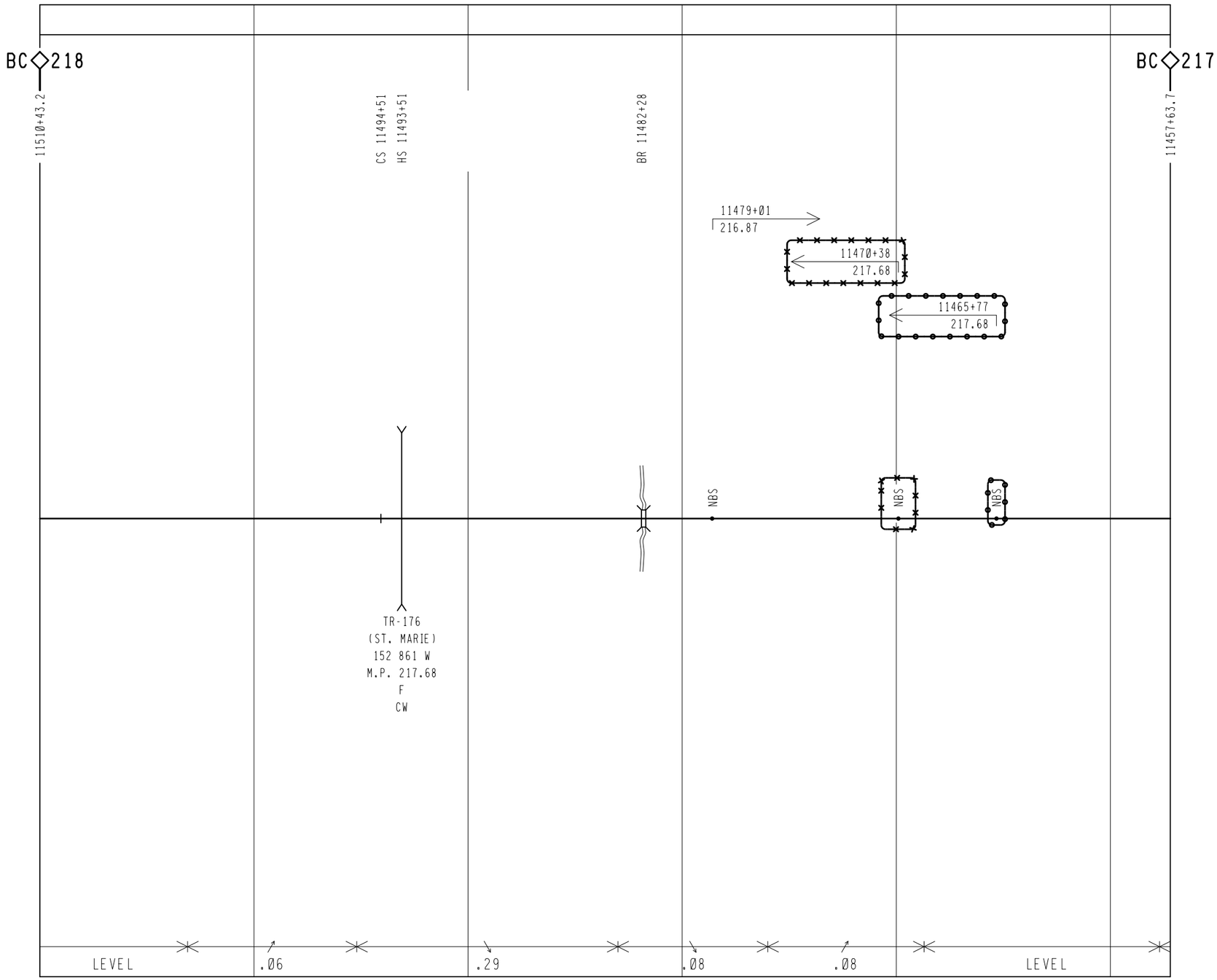

invensys Rail

PROJ #: IL20130014
DES BY: J. BRADY
CHK BY: D. ALBRIGHT
DATE: 05-15-13

= IN
= OUT

REVISIONS	
01-12-10 SAF IL2005022	

TRACK PLAN
HORIZONTAL SCALE:
1 INCH = 500 FEET

CSX TRANSPORTATION
RAIL TRANSPORT GROUP ENGINEERING
COMMUNICATIONS AND SIGNALS

DESIGNED	DIGITIZED	CHECKED	DATE	NEXT FILE	NEXT SH	FILE	SHEET
SWE	SWE	SWE	11-15-04	BC21800	T01	BC21700	T01

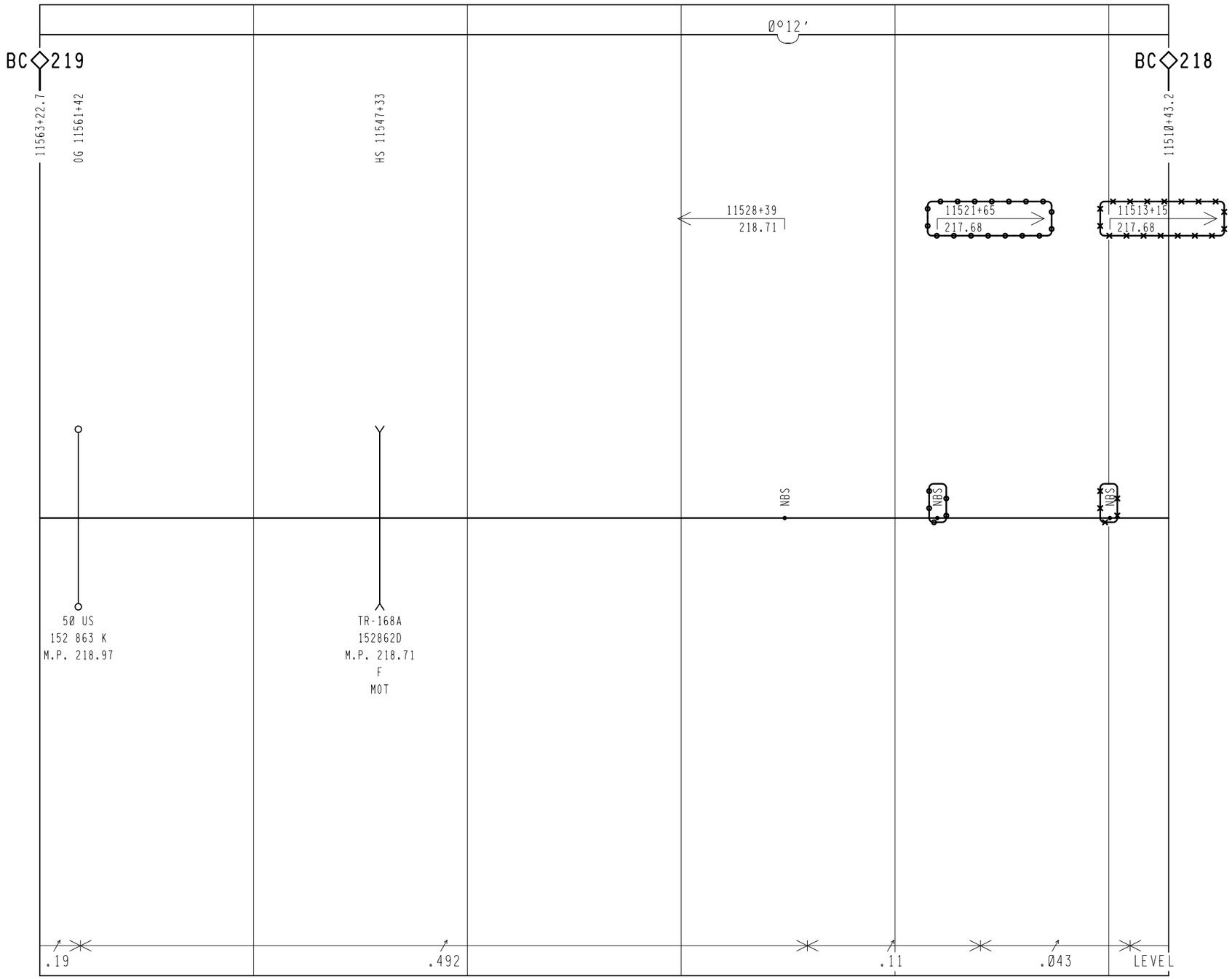

invensys
Rail

PROJ #: IL20130014
DES BY: J. BRADY
CHK BY: D. ALBRIGHT
DATE: 05-15-13

= IN
= OUT

REVISIONS	
01-12-10	SAF
IL20050022	

TRACK PLAN
HORIZONTAL SCALE:
1 INCH = 500 FEET

CSX TRANSPORTATION
RAIL TRANSPORT GROUP ENGINEERING
COMMUNICATIONS AND SIGNALS

DESIGNED	DIGITIZED	CHECKED	DATE	NEXT FILE	NEXT SH	FILE	SHEET
SWE	SWE	SWE	11-15-04	BC21900	T01	BC21800	T01

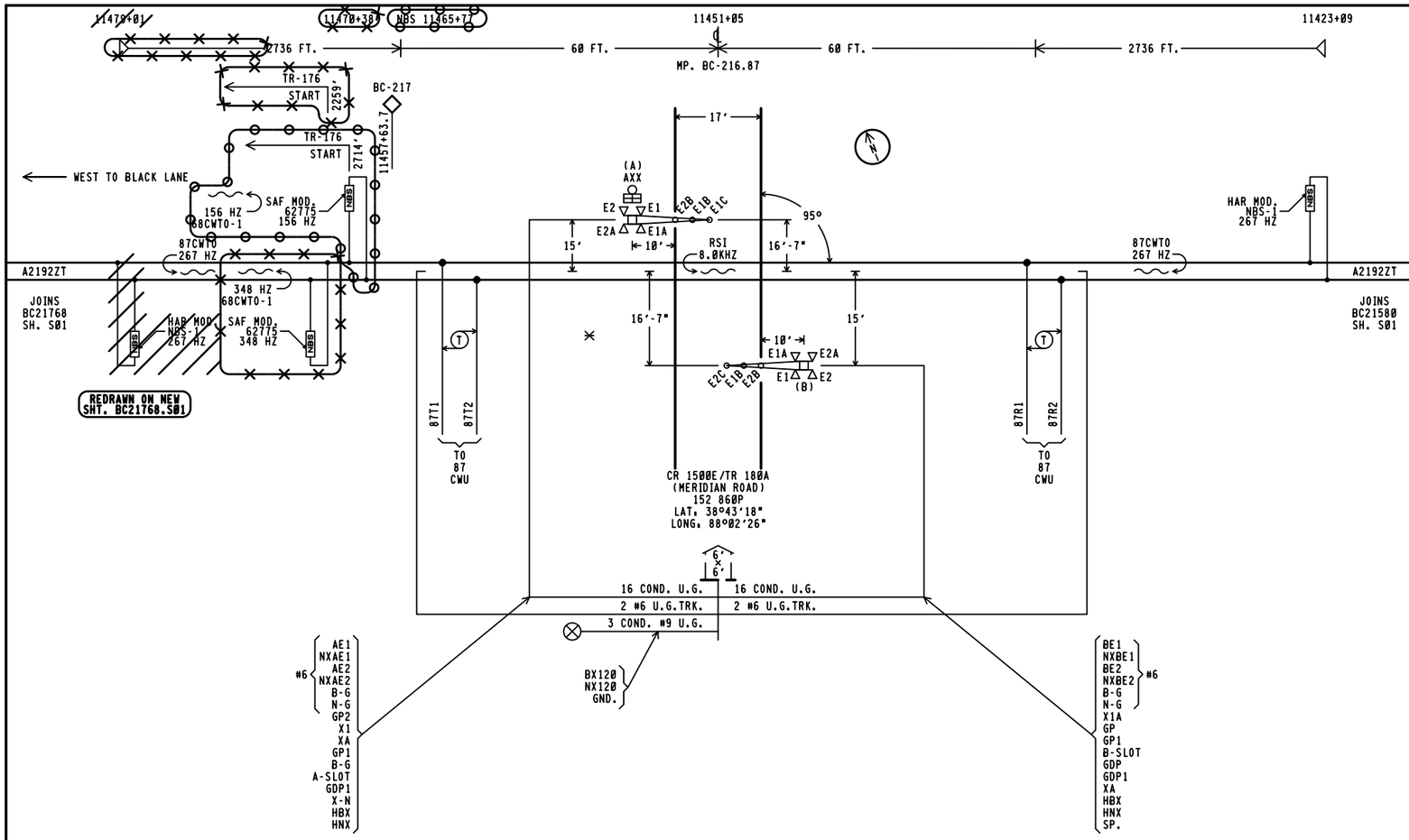

APPROACH LENGTHS TABLE DC, AFO, TYPE C, MOTION, CWT, OR OTHER	WESTWARD TRACK 1 CWT	EASTWARD TRACK 1 CWT
STANDARD MINIMUM WARNING TIME	20	20
ROADWAY GATE TIME	5	5
CLEARANCE TIME	0	0
DOT TRAFFIC LIGHT SIMULTANEOUS PREEMPT TIME ✳	0	0
DESIGNED WARNING TIME FOR TRAINS AT TIME TABLE SPEED	25	25
DOT TRAFFIC LIGHT ADVANCE PREEMPT TIME ✳	0	0
CONTROL EQUIPMENT DECISION TIME	4	4
DESIGNED DETECTION TIME FOR TRAINS AT TIME TABLE SPEED	29	29
TIME TABLE MAXIMUM TRAIN SPEED IN MILES PER HOUR	60	60
BUFFER SPEED IN MILES PER HOUR	5	5
TOTAL WARNING SYSTEM DESIGN SPEED	65	65
APPROACH DISTANCE TO ISLAND EDGE IN FEET	2736	2736
HALF WIDTH OF ISLAND IN FEET	60	60
APPROXIMATE MILE POSTS FOR APPROACH CIRCUIT	217.39	216.36

✳ AUTHORIZING AGENCY. NONE
✳ DATE OF REQUIREMENT. NONE
✳ AMOUNT OF TIME (SEC.). NONE

NOTE.

1. 20 WATT BULBS ON GATE ARMS. ALL OTHERS TO BE 25 WATT BULBS.
2. GATE LENGTH (A) 18' (B) 18'
3. ✳ = LOCATION OF HOUSE
4. (N) = APPROXIMATE COMPASS NORTH.
5. THE TRANSMITTER LEADS FOR MOTION OR PREDICTOR EQUIPMENT SHOULD BE CONNECTED ON THE BUNGALOW OR SHORT LEAD SIDE OF THE CROSSING.
6. ISLAND TRACK LEADS SHOULD BE CONNECTED 50 FEET FROM ROAD EDGE BUT ON NARROW ROADS (20' OR LESS) ISLAND LENGTH SHALL BE 120' FEET.
7. WARNING SYSTEM APPROACH CIRCUIT DISTANCES ARE TO BE MEASURED FROM THE ISLAND TRACK CONNECTIONS.

REVISIONS

02-06-03 SWE	IL2001042
01-12-10 SAF	IL2005022

invensys Rail

PROJ #. IL2013014
DES BY. J. BRADY
CHK BY. D. ALBRIGHT
DATE. 05-15-13

~~OOO~~ = IN
~~XXX~~ = OUT
( ) = NOTE

CSX TRANSPORTATION
RAIL TRANSPORT GROUP ENGINEERING
COMMUNICATIONS AND SIGNALS

CR 1500E/TR 180A (MERIDIAN RD.) 152860P

TRACK AND SIGNAL PLAN
CLAREMONT, IL, MP.BC-216.87

DESIGNED	DIGITIZED	CHECKED	DATE
SWE/LMC	SWE/LMC	SWE/MJH	02-07-02

DRAWING	SHEET NO	NEXT SH	NEXT FILE	NEXT SH	FILE	SHEET
-----	-----	-----	BC21687	E01	BC21687	S01

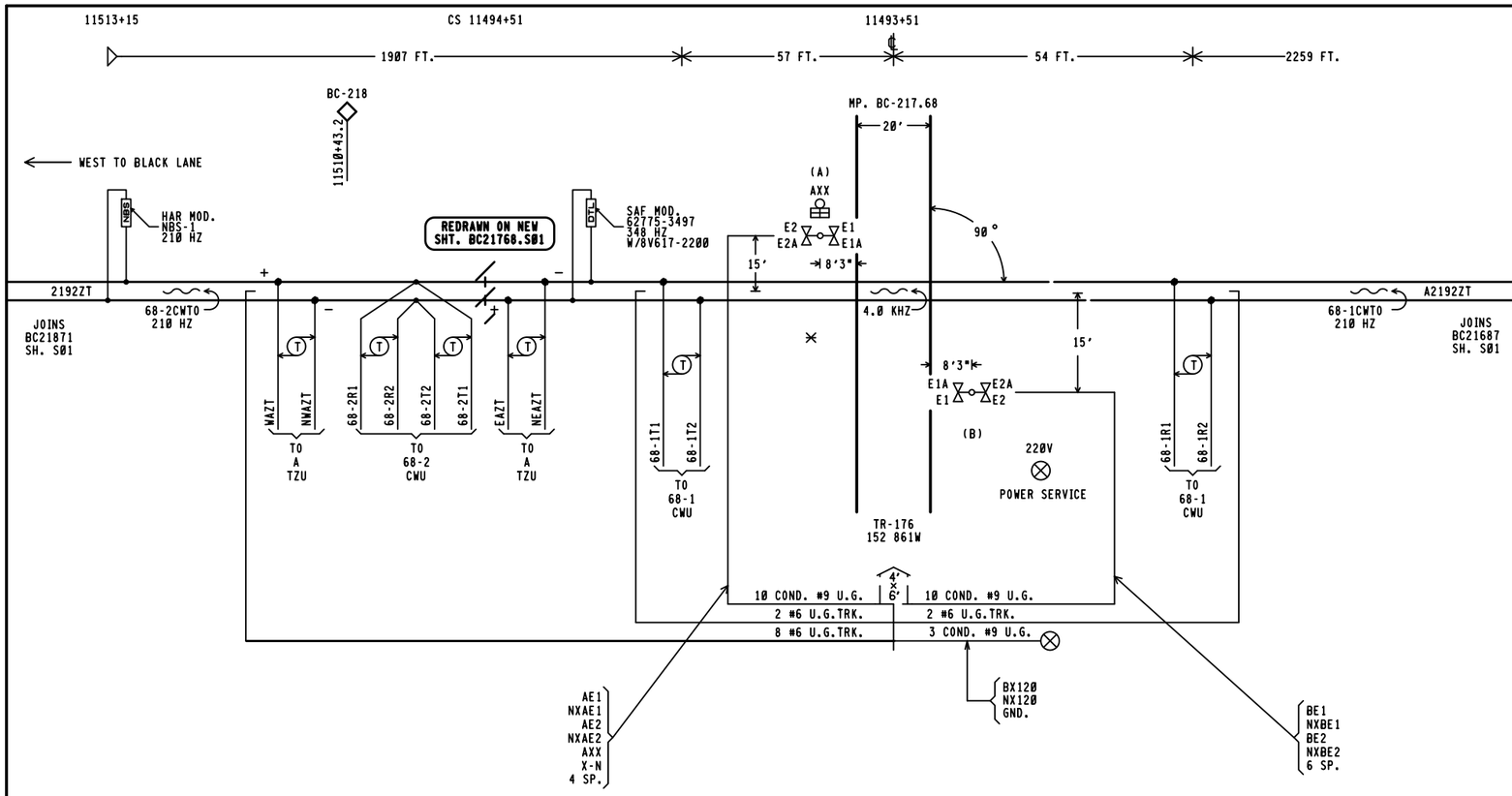

APPROACH LENGTHS TABLE DC, AFO, TYPE C, MOTION, CWT, OR OTHER	WESTWARD MAIN CWT	EASTWARD MAIN CWT
STANDARD MINIMUM WARNING TIME IN SECONDS	20	20
ROADWAY GATE TIME IN SECONDS	0	0
CLEARANCE TIME IN SECONDS	0	X
DOT TRAFFIC LIGHT SIMULTANEOUS PREEMPT TIME IN SECONDS ✳	0	0
DESIGNED WARNING TIME FOR TRAINS AT TIME TABLE SPEED	20 SEC.	20 SEC.
DOT TRAFFIC LIGHT ADVANCE PREEMPT TIME IN SECONDS ✳	0	0
CONTROL EQUIPMENT DECISION TIME IN SECONDS	4	4
DESIGNED DETECTION TIME FOR TRAINS AT TIME TABLE SPEED	24 SEC.	24 SEC.
TIME TABLE MAXIMUM TRAIN SPEED IN MILES PER HOUR	50	50
BUFFER SPEED IN MILES PER HOUR	5	5
TOTAL WARNING SYSTEM DESIGN SPEED IN MILES PER HOUR	55	55
APPROACH DISTANCE TO ISLAND EDGE IN FEET	1907	2259
HALF WIDTH OF ISLAND IN FEET	57	54
APPROXIMATE MILE POSTS FOR APPROACH CIRCUIT	218.05	217.24

✳AUTHORIZING AGENCY: "NONE"
✳DATE OF REQUIREMENT: "NONE"
✳AMOUNT OF TIME (SEC.): "NONE"

ALL ELSE OUT
VOID THIS SHEET
UPON AS-IN-SERVICE

NOTE: 25 WATT BULBS ON FLASHERS
✳ = LOCATION OF HOUSE
THE TRANSMITTER LEADS FOR MOTION OR PREDICTOR EQUIPMENT SHOULD BE CONNECTED ON THE BUNGALOW OR SHORT LEAD SIDE OF CROSSING.

REVISIONS

5-14-96 SAF IL94026	
02-06-03 SWE	IL2001042
01-12-10 SAF	IL2005022

invensys Rail

PROJ #: IL2013014
DES BY: J. BRADY
CHK BY: D. ALBRIGHT
DATE: 05-15-13

= NOTE
///= SHOWN ELSEWHERE

CSX TRANSPORTATION
RAIL TRANSPORT GROUP ENGINEERING
COMMUNICATIONS AND SIGNALS

TR-176 152861W
GEO REPEATER
TRACK AND SIGNAL PLAN
OLNEY, IL MP. BC-217.68

DESIGNED	DIGITIZED	CHECKED	DATE
SAF-DCC	SAF-DCC	SAF-EJH	5-26-94

DRAWING	SHEET NO	NEXT SH	NEXT FILE	NEXT SH	FILE	SHEET
-----	-----	-----	BC21768	E01	BC21768	S01

TOP ROW

XR			EOR			POR			APOR		
12	B	B77	12	FB	B81	12	FB	B62	9	F 11	N68
15	B	C30	15	FB	C30	15	FB	C30	10	12	C48
22	B		22	FB		22	FB				C49
25	B		32	FB		25	FB				
32			35	FB		32	FB				
35						35	FB				

REDRAWN ON NEW SHT. BC21768E01

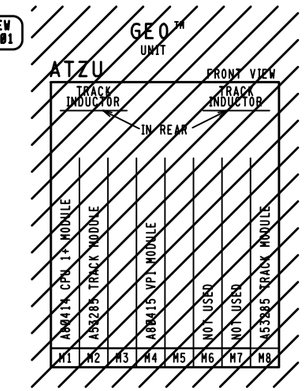

68-1CWU
MODULES REQUIRED

2EA.	80011 4.0KHZ HIGH FREQ. ISL. MOD.
2EA.	80012 TRANSCEIVER MOD.
2EA.	80013 RELAY DRIVE
2EA.	80014 PROCESSOR MOD.
1EA.	80028 TRANSFER MOD.
1EA.	80029 CONTROL INTERFACE

EQUIPMENT		
REF.	NOMENCLATURE	TYPE
	68-1CWU	MOTION SENSOR GRADE CROSSING PREDICTOR SAF MOD. 3000ND2. FREQ. 348HZ., W/ 4.0 KHZ ISL.
	68-2CWU	MOTION SENSOR GRADE CROSSING PREDICTOR HAR MOD. HXP-3R FREQ. 210HZ., NO ISL.

NOTES:

1 - REFERENCES ARE PER SCMS-13.
2 - ARRESTERS ARE PER SCMS-22.
3 - SHELF RELAY PLACEMENT ON CONSIST CHART HAS NO SIGNIFICANCE.
4 - PLUG-IN RELAYS ARE VIEWED FROM THE FRONT OF RACK.
5 - WIRING
  A - FEED TO ALL BUSSES, LIGHT CIRCUITS,MOTOR CIRCUITS TO BE #10 FLEX.
  B - 110-VOLT FEED FROM ENTRANCE TO POWER BUSS TO BE #10 FLEX.
  C - ALL TRACK WIRES TO BE #10 FLEX.
  D - ALL OTHERS TO BE #16 FLEX UNLESS NOTED.

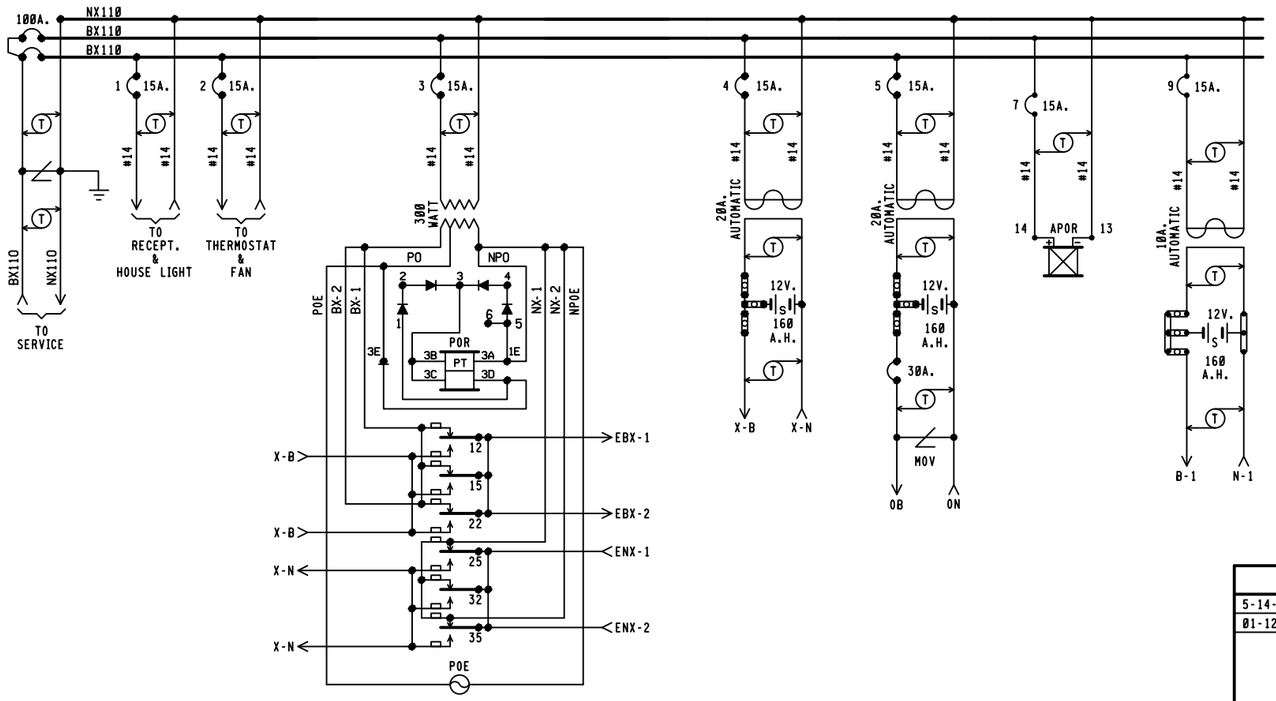

ALL ELSE OUT
VOID THIS SHEET
UPON AS-IN-SERVICE

invensys Rail

PROJ #: IL2013014
DES BY: J. BRADY
CHK BY: D. ALBRIGHT
DATE: 05-15-13

= NOTE
///= SHOWN ELSEWHERE

4' X 6' RELAY HOUSE

REVISIONS
5-14-96 SAF IL94026
01-12-10 SAF IL2005022

CSX TRANSPORTATION
RAIL TRANSPORT GROUP ENGINEERING
COMMUNICATIONS AND SIGNALS

TR-176 152861W
GEO REPEATER
POWER DISTRIBUTION
OLNEY, IL M.P. BC-217.68

DESIGNED	DIGITIZED	CHECKED	DATE
SAF-DCC	SAF-DCC	SAF-EJH	5-26-94

DRAWING	SHEET NO	NEXT SH	NEXT FILE	NEXT SH	FILE	SHEET
-----	-----	-----	BC21768	C01	BC21768	E01

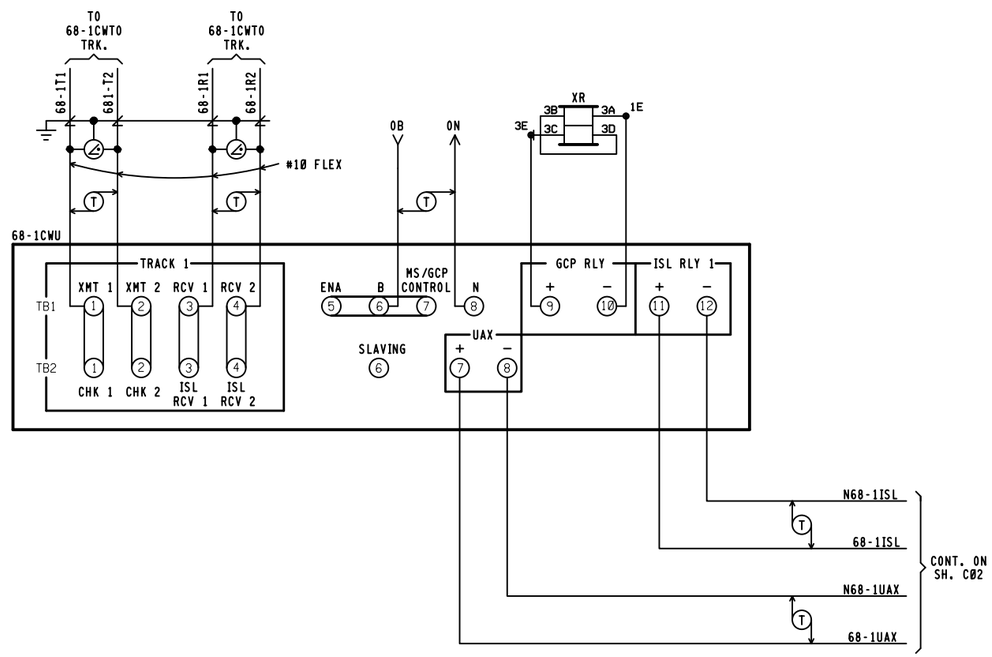

invensys
Rail

PROJ #: IL2013014
DES BY: J. BRADY
CHK BY: D. ALBRIGHT
DATE: 05-15-13

ALL OUT
VOID THIS SHEET
UPON AS-IN-SERVICE

MODULE 80028
S4 DIP SWITCH POSITIONS *

SWITCH #	16	8	4	2	1
SWITCH POSITION	UP	DOWN	UP	DOWN	UP

* MAY BE SET PER FIELD CONDITIONS

REVISIONS
5-14-96 SAF IL94026
01-12-10 SAF IL2005022

CSX TRANSPORTATION
RAIL TRANSPORT GROUP ENGINEERING
COMMUNICATIONS AND SIGNALS

TR-176 152861W
GEO REPEATER
DETECTION CIRCUITRY CWE 68-1
OLNEY, IL M.P. BC-217.68

DESIGNED	DIGITIZED	CHECKED	DATE
SAF-DCC	SAF-DCC	SAF-EJH	5-26-94

DRAWING	SHEET NO	NEXT SH	NEXT FILE	NEXT SH	FILE	SHEET
-----	-----	-----	BC21768	C02	BC21768	C01

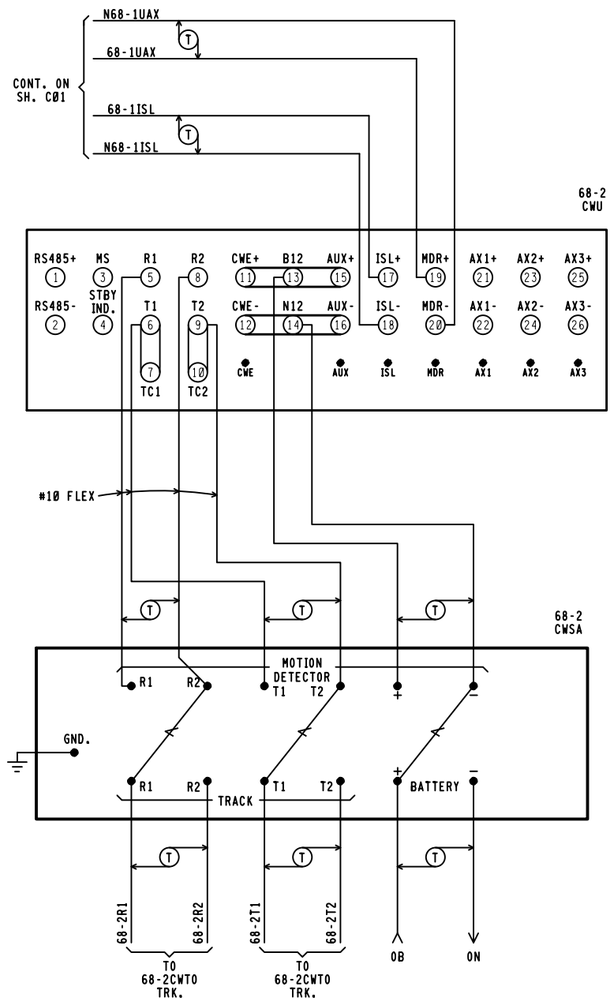

68-2CWU
HXP-3R MODULES REQUIRED

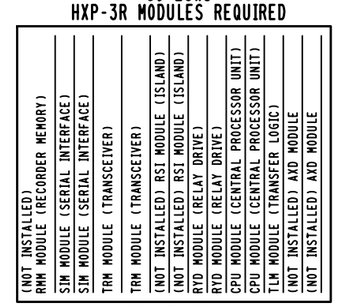

FRONT VIEW

68-2 CWU

CABINET SWITCHES
THESE SWITCHES ARE LOCATED ON MOTHERBOARD
MASTER/SLAVE MASTER — SLAVE S1

SYSTEM CONFIGURATION				
S6 & S7 DIP SWITCH POSITIONS				
SWITCH	1	2	3	4
SWITCH POSITION	ON	OFF	OFF	OFF
APPROACH.	NORMAL		(NOT USED)	

	FREQUENCY SELECT					
NORMAL	S2 & S3 DIP SWITCH POSITIONS 210 HZ					
	SWITCH	1	2	3	4	5
	SWITCH POSITION	OFF	ON	ON	OFF	OFF
STANDBY	S4 & S5 DIP SWITCH POSITIONS 210 HZ					
	SWITCH	1	2	3	4	5
	SWITCH POSITION	OFF	ON	ON	OFF	OFF

TLM MODULE JUMPERS AND SWITCHES

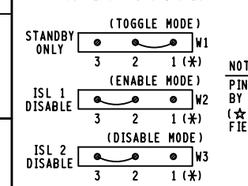

NOTE:
PIN 1 IS IDENTIFIED BY ASTERICK BELOW IT.
(☆) = MAY BE SET PER FIELD CONDITIONS.

MINUTE TIMEOUT SWITCH

SETTING	(☆) 9 MINUTES	S1

S2 — STANDBY / AUTO / NORMAL

invensys Rail

PROJ #: IL2013014
DES BY: J. BRADY
CHK BY: D. ALBRIGHT
DATE: 05-15-13

ALL OUT
VOID THIS SHEET UPON AS-IN-SERVICE

REVISIONS	
01-12-10 SAF	IL2005022

CSX TRANSPORTATION
RAIL TRANSPORT GROUP ENGINEERING
COMMUNICATIONS AND SIGNALS

TR-176 152861W
GEO REPEATER
DETECTION CIRCUITRY CWE-68-2
OLNEY, IL M.P BC-217.68

DESIGNED	DIGITIZED	CHECKED	DATE
SAF/JMA	SAF/JMA	SAF/GFS	05-14-08

NEXT FILE	NEXT SH	FILE	SHEET
BC21768	C03	BC21768	C02

3000 GCP APPLICATION DESIGN CARD

EQUIPMENT: 3000 [ ] 3000D2 [ ]
3000ND [ ] 3000ND2 [■]

ISLAND FREQUENCY: T1: 4.0 KHZ T2: ____ KHZ 68-1 CWU

NUMBER OF TRACKS (NUMBER OF TRANSCEIVER MODULES, 1 OR 2		1 [■]	2 [ ]
FREQUENCY (MS/GCP)		348 HZ	
UNIDIRECTIONAL/BIDIRECTIONAL	T1:	UNI [ ]	BI [■]
	T2:	UNI [ ]	BI [ ]
XMIT LEVEL	T1:	HI [ ]	MED [■]
	T2:	HI [ ]	MED [ ]
PREDICTOR/MOTION SENSOR	T1:	PRED [■]	MS [ ]
	T2:	PRED [ ]	MS [ ]
WARNING TIME SELECTED	T1:	20 SEC.	
	T2:	____ SEC.	
APPROACH DISTANCE SELECTED	T1:	2259 FT.	
	T2:	____ FT.	
APPROACH DISTANCE COMPUTED	T1:	NOT REQUIRED *	
	T2:	NOT REQUIRED *	
UAX PICKUP DELAY (UAX1) (0 = OFF)...		25 SEC.	
ENA/UAX2 DELAY (0 = ENA)		____ SEC.	
ISLAND DISTANCE (BETWEEN FEED WIRES)	T1:	☆ FT.	
	T2:	☆ FT.	
NUMBER OF DAXS		0 [■] 1 [ ] 2 [ ] 3 [ ] 4 [ ]	
DAX A TRACK ASSIGNMENT		T1 [ ]	T2 [ ]
DAX A DISTANCE (0 = PREEMPT).....		____ FT.	
DAX A WARNING TIME		____ SEC.	
DAX B TRACK ASSIGNMENT		T1 [ ]	T2 [ ]
DAX B DISTANCE (0 = PREEMPT).....		____ FT.	
DAX B WARNING TIME		____ SEC.	
DAX C TRACK ASSIGNMENT		T1 [ ]	T2 [ ]
DAX C DISTANCE (0 = PREEMPT).....		____ FT.	
DAX C WARNING TIME		____ SEC.	
DAX D TRACK ASSIGNMENT		T1 [ ]	T2 [ ]
DAX D DISTANCE (0 = PREEMPT).....		____ FT.	
DAX D WARNING TIME		____ SEC.	
SLAVING MASTER/SLAVE		MASTER [■]	SLAVE [ ]
PASSWORD ENABLED		DISABLED [■]	ENABLED [ ]
RECORDER INSTALLED		NOT INSTALLED [■]	INSTALLED [ ]
RS-232-C BAUD RATE		____ BPS	
RS-232-C DATE BITES		7 [ ]	8 [ ]
RS-232-C STOP BITS		1 [ ]	2 [ ]
RS-232-C PARITY		NONE [ ]	MARK [ ]
		ODD [ ]	SPACE [ ]
		EVEN [ ]	
DATE (E.G.,MON 13 MAY 1991) ..		NOT REQUIRED *	
TIME (E.G.,06.25.43 PM)		NOT REQUIRED *	
DAYLIGHT SAVINGS		ON [ ]	OFF [■]

* PROGRAMMED AT INSTALLATION DURING CALIBRATION PROCEDURE
☆ = (FOR INFORMATION ONLY 120' MIN.) NO ENTRY NEEDED

EXPANDED PROGRAMMING DESIGN

SWITCH TO MS (ENTER EZ VALUE).....	T1:	____ EZ
	T2:	____ EZ
TRANSFER DELAY MS TO GCP (0 = OFF)..	T1:	____ SEC.
	T2:	____ SEC.
PRIME PREDICTION OFFSET (0 = OFF)..	T1:	____ FT.
	T2:	____ FT.
PICKUP DELAY PRIME		15 SEC.
PICKUP DELAY DAX A		____ SEC.
PICKUP DELAY DAX B		____ SEC.
PICKUP DELAY DAX C		____ SEC.
PICKUP DELAY DAX D		____ SEC.
COMPENSATION VALUE	T1:	NOT REQUIRED **
COMPENSATION VALUE	T2:	NOT REQUIRED **

** THE COMPENSATION VALUE IS PROVIDED BY THE 3000 GCP SYSTEM AND NO ADDITIONAL PROGRAMMING IS NORMALLY REQUIRED.

invensys Rail

PROJ #. IL2013014
DES BY. J. BRADY
CHK BY. D. ALBRIGHT
DATE. 05-15-13

ALL OUT
VOID THIS SHEET UPON AS-IN-SERVICE

REVISIONS
5-14-96 SAF IL94026
01-12-10 SAF IL2005022

CSX TRANSPORTATION
RAIL TRANSPORT GROUP ENGINEERING
COMMUNICATIONS AND SIGNALS

TR-176 152861W
GEO REPEATER
DETECTION PROGRAM FOR 68-1
OLNEY,IL M.P. BC-217.68

DESIGNED	DIGITIZED	CHECKED	DATE
SAF-DCC	SAF-DCC	SAF-EJH	5-26-94

DRAWING	SHEET NO	NEXT SH	NEXT FILE	NEXT SH	FILE	SHEET
-----	-----	-----	BC21768	C04	BC21768	C03

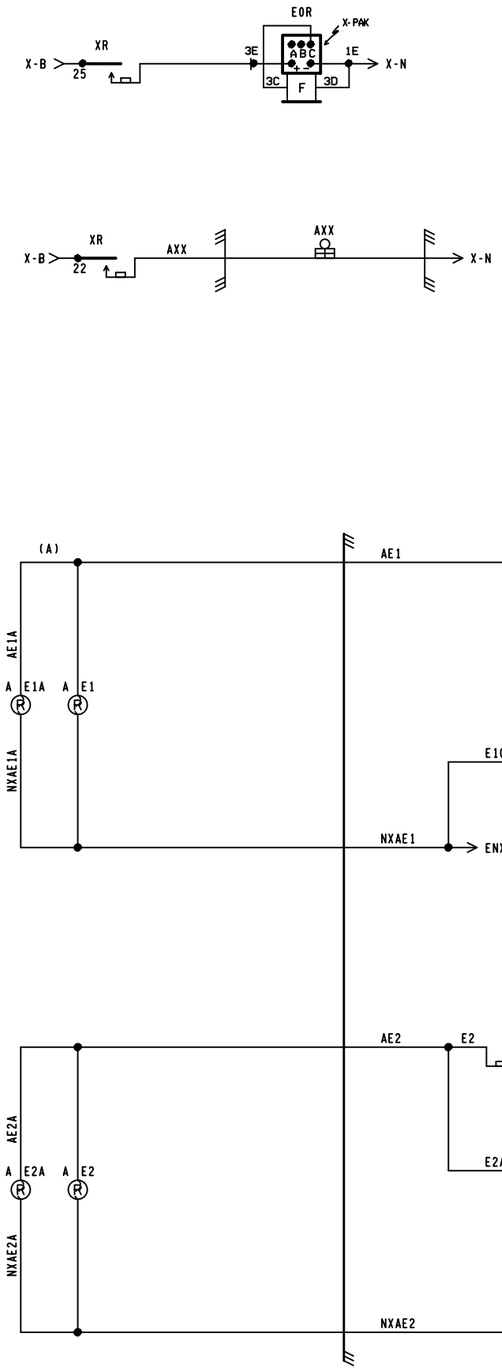

invensys Rail

PROJ #: IL2013014
DES BY: J. BRADY
CHK BY: D. ALBRIGHT
DATE: 05-15-13

ALL OUT

VOID THIS SHEET UPON AS-IN-SERVICE

REVISIONS	
5-14-96 SAF IL94026	
02-06-03 SWE	IL2001042
01-12-10 SAF	IL2005022

CSX TRANSPORTATION
RAIL TRANSPORT GROUP ENGINEERING
COMMUNICATIONS AND SIGNALS

TR-176 152861W

GEO REPEATER
CROSSING WARNING DEVICE CIRCUITRY
OLNEY,IL MP. BC-217.68

DESIGNED	DIGITIZED	CHECKED	DATE
SAF-DCC	SAF-DCC	SAF-EJH	5-26-94

DRAWING	SHEET NO	NEXT SH	NEXT FILE	NEXT SH	FILE	SHEET
-----	-----	-----	BC21768	C05	BC21768	C04

68-2CWU

HXP-3R APPLICATION DESIGN CARD

OPTION 90 (CABINET #)	CABINET #

PASSWORD(_ _✱_ _)(SEE MANUAL 100052-001 AA0 1-27	TRACK 1	TRACK 2	DEFAULT
APPROACH LENGTH ADJUSTMENT	1907'	N/A	9,999 FT.
WARNING TIME ADJUSTMENT	20 SEC.	N/A	99 SEC.
LUMPED IMPEDANCE ADJUSTMENT (LIA)	✱	N/A	0
TRANSMITTER CHECK ADJUSTMENT (TC)	✱	N/A	0
MOTION DETECT RESTART (MD RESTART)	0 ☆	N/A	99%
OPTION 1 TRACK ENABLE (TK-ENA)	UP	N/A	UP (ALWAYS ENABLED)
OPTION 2 TRACK FREQUENCY (TK FO)	STRAP ◇	N/A	0 HZ
OPTION 3 CONSTANT WARNING/MOTION (CW/MD)	C	N/A	d (Motion)
OPTION 4 UNI/BIDIRECTIONAL (UNI-BI)	u	N/A	b (bi)
OPTION 5 NARROW BAND COMPENSATION (NBS-C)	⊗	N/A	9,999 FT.
OPTION 6 CWE WARNING TIME (CWEWT)	80 SEC.	N/A	80 SEC.
OPTION 7 LOSS OF SHUNT TIME (LOS)	16 SEC.	N/A	16 SEC.
OPTION 8 LOS W/JOINTS NEAR ISLAND (IJ-LOS)	5 SEC. ✱✱	N/A	5 SEC.
OPTION 9 BALLAST COMPENSATION (BC)	✱	N/A	FREQUENCY DEPENDANT ◎
OPTION 10 PHASE COMPENSATION ADJUSTMENT (P-COMP)	~~✱✱✱~~	N/A	0°

	AX OPTIONS △	OPTION 11 AX DRIVE #1	OPTION 12 AX DRIVE #2	OPTION 13 AX DRIVE #3	DEFAULT
ITEM 1	TRACK ASSIGNMENT (TK-ASN)	N/A	N/A	N/A	1
ITEM 2	OFFSET DISTANCE TRACK 1 (OF-TK1)	0000'	0000'	0000'	0 FT.
ITEM 3	OFFSET DISTANCE TRACK 2 (OF-TK2)	N/A	N/A	N/A	N/A
ITEM 4	WARNING TIME (WT)	99 SEC.	99 SEC.	99 SEC.	99 SEC.
ITEM 5	MOTION DETECT RESTART (MD-RST)	99 %	99 %	99 %	99 %
ITEM 6	CONSTANT WARNING/MOTION (CW/MD)	d	d	d	d (Motion)
ITEM 7	CLEAR JOINTS LOS (CJ-LOS)	00 SEC.	00 SEC.	00 SEC.	0 SEC.
ITEM 8	POST JOINT DETECTION (PJ-DET)	15 SEC.	15 SEC.	15 SEC.	15 SEC.
ITEM 9	POST JOINT RX (PJ-RX)	15	15	15	15
ITEM 10	POSITIVE START	dn	dn	dn	dn
OPTION 17 MDR DRIVE OR AX RELAY DRIVE SELECTION (MDR-AX)			◎	N/A	dn (STATUS ONLY) ◎
	OPTION 17 SUB-MENU		TRACK 1	TRACK 2	DEFAULT
ITEM 1	MDR-AX OFFSET DISTANCE TRK. 1(OF-TK1) & TRK. 2(OF-TK2)		1'	N/A	0 FT.= CONFIGURED AS MDR
ITEM 2	MDR-AX CLEAR JOINT LOS TIME (CJ-LOS)		00 SEC.	N/A	0 SEC.
ITEM 3	MDR-AX POST JOINT DETECTION TIME (PJ-DET)		15 SEC.	N/A	15 SEC.
ITEM 4	POST JOINT RX (PJ-RX)		15	N/A	15 (0 = DISABLE)
OPTION 18 MOTION DETECTOR TIMER (MD-TMR)			10 MIN.	N/A	10 MIN. (0 = DISABLE)
OPTION 19 MINIMUM WARNING TIME WITH ADVANCED PREEMPTION (MIN-WT)			00 SEC.	N/A	00 SEC. (0 = DISABLE)
	OPTION 20 FALSE SHUNT TIMER ADJUSTMENT (FS-TMR)				
ITEM 1	FALSE SHUNT RX (FS-RX)		0	N/A	0, 0 = DISABLE
ITEM 2	FALSE SHUNT TIMER ADJUSTMENT (FS-TM)		10	N/A	10
	OPTION 21 POSITIVE START RX & TIMER ADJUSTMENT (POS-ST)				
ITEM 1	POSITIVE START RX (POS-RX)		0	N/A	0, 0 = DISABLE
ITEM 2	POSITIVE START TIMER (POS-TM)		10	N/A	10
	OPTION 22 APPROACH RELEASE RX (AR-TM)				
ITEM 1	APPROACH RELEASE RX (AR-RX)		0	N/A	0, 0 = DISABLE
ITEM 2	APPROACH RELEASE TIMER (AR-TM)		10	N/A	10
OPTION 47 AUTO RX ADJUSTMENT (ATO-RX)			dn	N/A	dn = DISABLE
OPTION 48 PREDICTIVE FILTER ENABLE/DISABLE (PF-ENA)			dn	N/A	dn = DISABLE
OPTION 49 RESET LOCAL PARAMETERS TO DEFAULT SETTINGS (RESET)					PAGE 3-14 & 3-41
OPTION 50 RECORDER PRINTER CONTROL (PRNTR)			⊕		PAGE 1-47 & 3-41
OPTION 51 CLOCK ADJUSTMENT (CLOCK)			⊕		PAGE 3-32
	OPTION 70 LOCAL SERIAL I/O PORT ADJUSTMENT (LSP)				
ITEM 1	BAUD RATE		38.4	⊕	PAGE 1-47 & 3-42
ITEM 2	DBITS (DATA BITS)		8	⊕	PAGE 1-47 & 3-42
ITEM 3	PA (PARITY)		NO(-=NO PARITY)	⊕	PAGE 1-47 & 3-42
OPTION 90 CABINET NUMBER DISPLAY (CAB)			✱		PAGE 1-47 & 3-41
OPTION 91 HXP-3 OPERATING PROGRAM VERSION NUMBER (VERS)			✱		VERSION 35.0
OPTION 99 RESET PASSWORD TIMER (TIMER)			⊕		PAGE 3-30

NOTE:

✱ = ENTRY TO BE DONE ON AS-IN-SERVICE.

☆ = NORMALLY SET AT "0" SEE MANUAL 100052-001 AA0 PG. 1-46 & 3-41.

◇ = THE WORD STRAP IS DISPLAYED WHEN FREQUENCY SELECT DIP SWITCHES USED TO SELECT A STANDARD FREQUENCY.

⊗ = ADJUSTMENT NECESSARY ONLY WHEN AX RELAY DRIVE MODULE USED.

✱✱ = ADJUSTMENT NECESSARY IF INSULATED JOINTS ARE LOCATED NEAR ISLAND CIRCUIT.

~~✱✱✱~~ = ADJUSTMENT NECESSARY ONLY IF VERY POOR BALLAST CONDITIONS NEED TO BE COMPENSATED.

◎ = OPTION 17 SUB-MENU USED ONLY WHEN AX RELAY DRIVE OPERATION IS SELECTED. ENTERING AN OFFSET DISTANCE VALUE OTHER THAN ZERO ASSIGNS A MDR AS AN AX DRIVE.

△ 1. WHEN AXD MODULES ARE NOT INSTALLED, THEIR ASSOCIATED OPTIONS AND ADJUSTMENTS ARE NOT DISPLAYED.
2. PROGRAM UNUSED AX OPTION(S) SAME AS OPTION 11. IF AX OPTION 12 OR 13 IS USED IN FUTURE THEN REPROGRAM AS APPLICABLE.

◎ = FREQUENCY DEPENDANT, RANGE BETWEEN 50-250 TO BE SUPPLIED ON AS-IN-SERVICE.

⊕ = OPTIONS 50-99 ARE NON-VITAL AND NOT REQUIRED FOR INITIAL SETUP. SEE MANUAL 100052-001 AA0. FOR OPTIONS 49 TO 99 SEE PAGES AS LISTED IN DEFAULT COLUMN.

⊕ = SET CORRECT LOCAL TIME AND DATE. TIME OF DAY SHOULD BE SYNCRONIZED WITH TIME SHOWN BY EXTERNAL EVENT RECORDER.

invensys Rail

PROJ #: IL2013014
DES BY: J. BRADY
CHK BY: D. ALBRIGHT
DATE: 05-15-13

ALL OUT

VOID THIS SHEET UPON AS-IN-SERVICE

REVISIONS	
01-12-10 SAF	IL2005022

CSX TRANSPORTATION
RAIL TRANSPORT GROUP ENGINEERING
COMMUNICATIONS AND SIGNALS

TR-176 152861W

GEO REPEATER
DETECTION PROGRAM CWE-68-2
OLNEY, IL M.P BC-217.68

DESIGNED	DIGITIZED	CHECKED	DATE
SAF/JMA	SAF/JMA	SAF/GFS	05-14-08

NEXT FILE	NEXT SH	FILE	SHEET
BC21768	C06	BC21768	C05

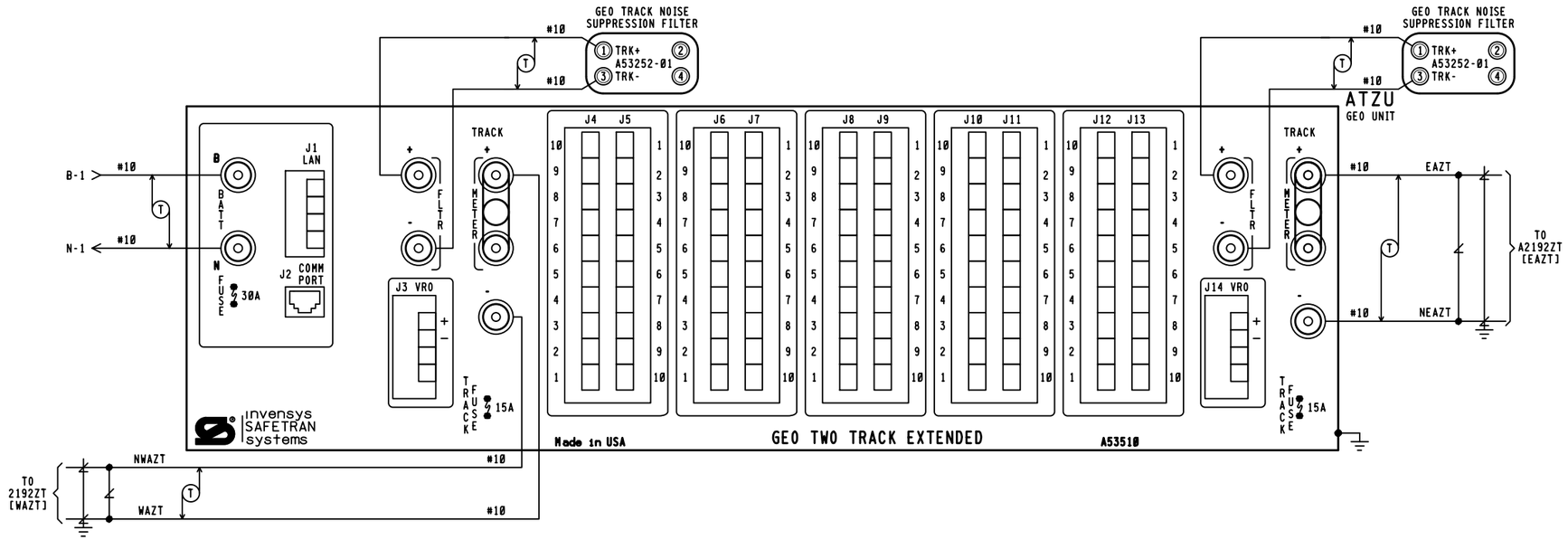

GEO CONNECTOR PINOUTS										
PIN	MODULE 3 (J4)		MODULE 4 (J6)		MODULE 5 (J8)		MODULE 6 (J10)		MODULE 7 (J12)	
10	VR0 +		VPI1 +	APOR	VR01 +		NOT USED	NOT USED	NOT USED	NOT USED
9	VR0 -		VPI1 -	NAPOR	VR01 -		NOT USED	NOT USED	NOT USED	NOT USED
8	VRI1 +		VPI2 +	LNWP	VR02 +		NOT USED	NOT USED	NOT USED	NOT USED
7	VPI1 -		VPI2 -	NLNWP	VR02 -		NOT USED	NOT USED	NOT USED	NOT USED
6	VPI2 +		VPI3 +	RNWP	VR03 +		NOT USED	NOT USED	NOT USED	NOT USED
5	VPI2 -		VPI3 -	NRNWP	VR03 -		NOT USED	NOT USED	NOT USED	NOT USED
4	LAMP1 +		VPI4 +		VR04 +		NOT USED	NOT USED	NOT USED	NOT USED
3	LAMP1 -		VPI4 -		VR04 -		NOT USED	NOT USED	NOT USED	NOT USED
2	LAMP2 +		VPI5 +		VPI1 +		NOT USED	NOT USED	NOT USED	NOT USED
1	LAMP2 -		VPI5 -		VPI1 -		NOT USED	NOT USED	NOT USED	NOT USED
PIN	MODULE 3 (J5)		MODULE 4 (J7)		MODULE 5 (J9)		MODULE 6 (J11)		MODULE 7 (J13)	
1	LAMP3 +		VPI6 +	NOT USED	VPI2 +		NOT USED	NOT USED	NOT USED	NOT USED
2	LAMP3 -		VPI6 -	NOT USED	VPI2 -		NOT USED	NOT USED	NOT USED	NOT USED
3	LAMP4 +		VPI7 +	NOT USED	VPI3 +		NOT USED	NOT USED	NOT USED	NOT USED
4	LAMP4 -		VPI7 -	NOT USED	VPI3 -		NOT USED	NOT USED	NOT USED	NOT USED
5	LAMP5 +		VPI8 +	NOT USED	VPI4 +		NOT USED	NOT USED	NOT USED	NOT USED
6	LAMP5 -		VPI8 -	NOT USED	VPI4 -		NOT USED	NOT USED	NOT USED	NOT USED
7	LAMP6 +		NOT USED	NOT USED	NOT USED	NOT USED	NOT USED	NOT USED	NOT USED	NOT USED
8	LAMP6 -		NOT USED	NOT USED	NOT USED	NOT USED	NOT USED	NOT USED	NOT USED	NOT USED
9	RED RET +	NOT USED	NOT USED	NOT USED	NOT USED	NOT USED	NOT USED	NOT USED	NOT USED	NOT USED
10	RED RET -	NOT USED	NOT USED	NOT USED	NOT USED	NOT USED	NOT USED	NOT USED	NOT USED	NOT USED

GEO CONNECTOR PINOUTS				
(J1)	(J3)		(J14)	
ECH1	VR01+	NOT USED	VR01+	NOT USED
ECH2	VR01-	NOT USED	VR01-	NOT USED
NOT USED	NOT USED	NOT USED	NOT USED	NOT USED
NOT USED	NOT USED	NOT USED	NOT USED	NOT USED

ALL OUT

VOID THIS SHEET UPON AS-IN-SERVICE

invensys Rail

PROJ #: IL2013014
DES BY: J. BRADY
CHK BY: D. ALBRIGHT
DATE: 05-15-13

NOTE:
1. [ ] = TAGGING PURPOSES ONLY.

REVISIONS	
01-12-10 SAF	IL2005022

CSX TRANSPORTATION
RAIL TRANSPORT GROUP ENGINEERING
COMMUNICATIONS AND SIGNALS

TR-176 152861W

GEO REPEATER
GEO CIRCUITS
OLNEY, IL M.P BC-217.68

DESIGNED	DIGITIZED	CHECKED	DATE
SAF/JMA	SAF/JMA	SAF/GFS	05-14-08
NEXT FILE	NEXT SH	FILE	SHEET
BC21768	C07	BC21768	C06

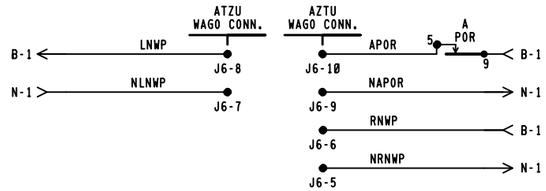

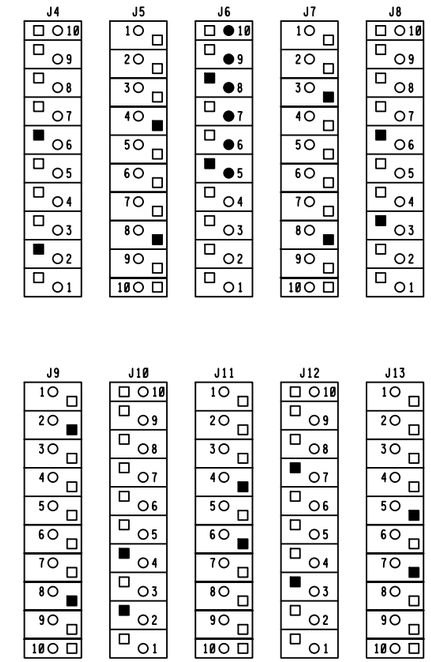

WAGOS ● - WIRED
○ - NOT WIRED
KEYING FINGERS ■ - CUT
□ - NOT CUT

invensys Rail

PROJ #: IL2013014
DES BY: J. BRADY
CHK BY: D. ALBRIGHT
DATE: 05-15-13

ALL OUT
VOID THIS SHEET
UPON AS-IN-SERVICE

NOTE:
1. [ ] = TAGGING PURPOSES ONLY.

REVISIONS	
01-12-10 SAF	IL2005022

CSX TRANSPORTATION
RAIL TRANSPORT GROUP ENGINEERING
COMMUNICATIONS AND SIGNALS

TR-176 152861W
GEO REPEATER
GEO I/O CIRCUITS
OLNEY, IL M.P BC-217.68

DESIGNED	DIGITIZED	CHECKED	DATE
SAF/JMA	SAF/JMA	SAF/GFS	05-14-08

NEXT FILE	NEXT SH	FILE	SHEET
-----	-----	BC21768	C07

INDEX

CONTENTS

SH. NO.		REVISION NO. 1	2	3	4	5	6	7	8	9
I01	INDEX AND REVISIONS	X	⊘							
S01	TRACK AND SIGNAL PLAN	X								
P01	GEO PROGRAM (ATZU)	X								
P02	SEAR II CONFIGURATION	X								
E01	POWER DISTRIBUTION	X								
C01	GEO CIRCUITS	X	⊘							
C02	LCP I/O AND PSO II CIRCUITS	X								
C03	SIGNAL LIGHTING CIRCUITS	X								
C04	SIGNAL LIGHTING CIRCUITS	X								
C05	SIGNAL LIGHTING CIRCUITS	X								
C06	SWITCH CIRCUITS	X								
C07	SEAR II CIRCUITS	X								
C08	LOCAL CONTROL PANEL	X								

⊘ = PLANS SENT TO FIELD (DISTRIBUTED)

X = PLANS AS-IN-SERVICED (UP TO DATE)

REVISIONS

REV. NO.	PROJECT NO.	DESIGN DATE	IN SERVICE DATE	REVISION DATE
1	IL2005022 IL2005022A	05-14-08 02-23-09	10-28-09	01-12-10
2	IL2013014	05-15-13	-----	-----

TO BE COMPLETED ON A.I.S.

invensys Rail

PROJ #: IL2013014
DES BY: J. BRADY
CHK BY: D. ALBRIGHT
DATE: 05-15-13

= IN

= NOTE

CSX TRANSPORTATION

RAIL TRANSPORT GROUP ENGINEERING
COMMUNICATIONS AND SIGNALS

E.E. OLNEY

INDEX AND REVISIONS
OLNEY, IL M.P. BC-219.30

DESIGNED	DIGITIZED	CHECKED	DATE
SAF/JMA	SAF/JMA	SAF/GFS	05-14-08

DESIGN DATE	REV. NO.	DRAWING	SHEET NO	FILE	SHEET
-----	1	------	------	BC21930	I01

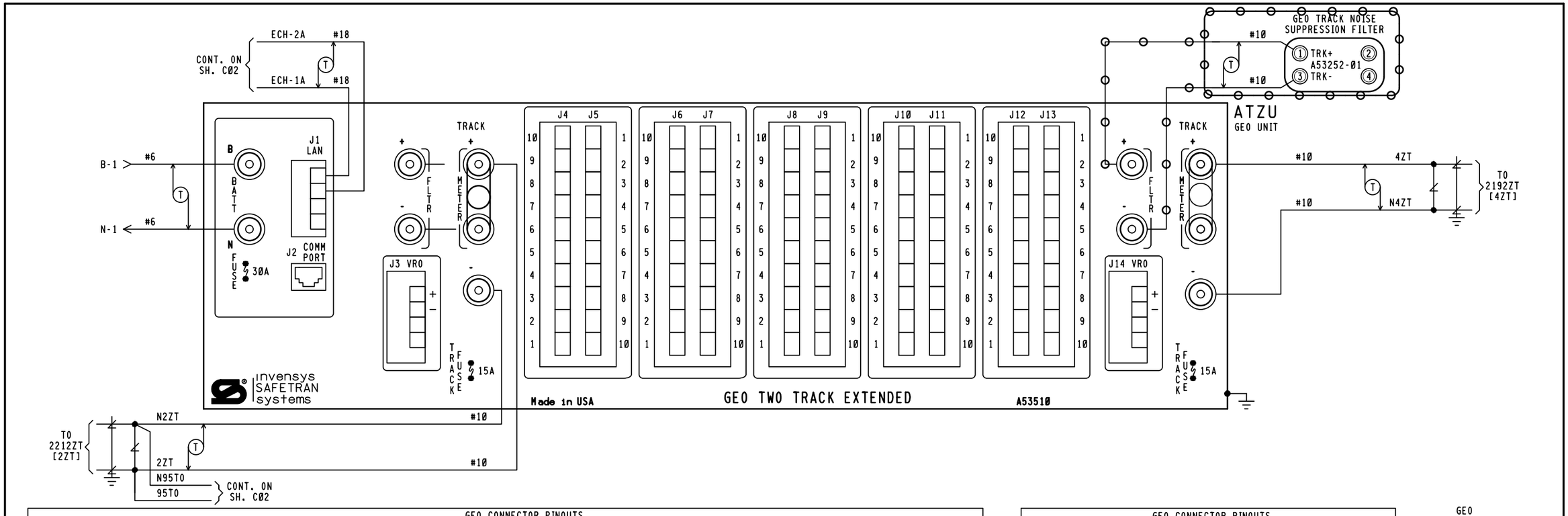

GEO CONNECTOR PINOUTS										
PIN	MODULE 3 (J4)		MODULE 4 (J6)		MODULE 5 (J8)		MODULE 6 (J10)		MODULE 7 (J12)	
10	VR0 +	NOT USED	VR0 +	NOT USED	VR0 +	NOT USED	NOT USED	NOT USED	NOT USED	NOT USED
9	VR0 -	NOT USED	VR0 -	NOT USED	VR0 -	NOT USED	NOT USED	NOT USED	NOT USED	NOT USED
8	VPI1 +	1NWP	VPI1 +	2T	VPI1 +	P0R	NOT USED	NOT USED	NOT USED	NOT USED
7	VPI1 -	N1NWP	VPI1 -	N2T	VPI1 -	NP0R	NOT USED	NOT USED	NOT USED	NOT USED
6	VPI2 +	1RWP	VPI2 +	KEFSR	VPI2 +	95NWP	NOT USED	NOT USED	NOT USED	NOT USED
5	VPI2 -	N1RWP	VPI2 -	NKEFSR	VPI2 -	N95NWP	NOT USED	NOT USED	NOT USED	NOT USED
4	LAMP1 +	2AGE	LAMP1 +	4AGE	LAMP1 +	6GE	NOT USED	NOT USED	NOT USED	NOT USED
3	LAMP1 -	N2AGE	LAMP1 -	N4AGE	LAMP1 -	N6GE	NOT USED	NOT USED	NOT USED	NOT USED
2	LAMP2 +	2AYE	LAMP2 +	4AYE	LAMP2 +	6YE	NOT USED	NOT USED	NOT USED	NOT USED
1	LAMP2 -	N2AYE	LAMP2 -	N4AYE	LAMP2 -	N6YE	NOT USED	NOT USED	NOT USED	NOT USED
PIN	MODULE 3 (J5)		MODULE 4 (J7)		MODULE 5 (J9)		MODULE 6 (J11)		MODULE 7 (J13)	
1	LAMP3 +	2ARE	LAMP3 +	4ARE	LAMP3 +	6LWE	NOT USED	NOT USED	NOT USED	NOT USED
2	LAMP3 -	N2ARE	LAMP3 -	N4ARE	LAMP3 -	N6LWE	NOT USED	NOT USED	NOT USED	NOT USED
3	LAMP4 +	NOT USED	LAMP4 +	NOT USED	LAMP4 +	6RE	NOT USED	NOT USED	NOT USED	NOT USED
4	LAMP4 -	NOT USED	LAMP4 -	NOT USED	LAMP4 -	N6RE	NOT USED	NOT USED	NOT USED	NOT USED
5	LAMP5 +	2BLWE	LAMP5 +	4BLWE	LAMP5 +	NOT USED	NOT USED	NOT USED	NOT USED	NOT USED
6	LAMP5 -	N2BLWE	LAMP5 -	N4BLWE	LAMP5 -	NOT USED	NOT USED	NOT USED	NOT USED	NOT USED
7	LAMP6 +	2BRE	LAMP6 +	4BRE	LAMP6 +	NOT USED	NOT USED	NOT USED	NOT USED	NOT USED
8	LAMP6 -	N2BRE	LAMP6 -	N4BRE	LAMP6 -	NOT USED	NOT USED	NOT USED	NOT USED	NOT USED
9	RED RET +	AM3STOP	RED RET +	AM4STOP	RED RET +	AM5STOP	NOT USED	NOT USED	NOT USED	NOT USED
10	RED RET -	NAM3STOP	RED RET -	NAM4STOP	RED RET -	NAM5STOP	NOT USED	NOT USED	NOT USED	NOT USED

GEO CONNECTOR PINOUTS				
(J1)	(J3)		(J14)	
ECH1	VR01+	NOT USED	VR01+	NOT USED
ECH2	VR01-	NOT USED	VR01-	NOT USED
NOT USED	NOT USED	NOT USED	NOT USED	NOT USED
NOT USED	NOT USED	NOT USED	NOT USED	NOT USED

GEO
WAGO CONN.
J1

WAGOS ● = WIRED
○ = NOT WIRED

invensys
Rail

PROJ #. IL2013014
DES BY. J. BRADY
CHK BY. D. ALBRIGHT
DATE. 05-15-13

⊖⊖⊖ = IN

NOTES.

1. [ ] = TAGGING PURPOSES ONLY.
2. ECHELON CONNECTION, POLARITY IS ARBITRARY.

CSX TRANSPORTATION
RAIL TRANSPORT GROUP ENGINEERING
COMMUNICATIONS AND SIGNALS

E.E. OLNEY

GEO CIRCUITS
OLNEY, IL M.P. BC-219.30

DESIGNED	DIGITIZED	CHECKED	DATE
SAF/JMA	SAF/JMA	SAF/GFS	05-14-08

DESIGN DATE	REV. NO.	DRAWING	SHEET NO	FILE	SHEET
-----	1	------	------	BC21930	C01

REVISIONS				
REV. NO.	PROJECT NO.	DESIGN DATE	IN SERVICE DATE	REVISION DATE
1	IL2013014	05-15-13		

TO BE COMPLETED ON A.I.S.

INDEX

CONTENTS

SH. NO.		REVISION NO. 1	2	3	4	5	6	7	8	9
I01	INDEX AND REVISIONS									
S01	TRACK AND SIGNAL PLAN									
E01	POWER DISTRIBUTION									
C01	CROSSING DETECTION CIRCUITRY									
C02	DETECTION DEVICE PROGRAM									
C03	CROSSING WARNING DEVICE GATE CIRCUITRY									
C04	CROSSING WARNING DEVICE LIGHT CIRCUITRY									
C05	SEAR II CIRCUITS									
C06	SEAR II CONFIGURATION AND FUNCTIONS									
C07	SEAR II CHANNELS									
C08	WAYSIDE ACCESS GATEWAY									
C09	GEO REPEATER									
C10	GEO REPEATER CIRCUITRY									

= DESIGN COMPLETED

= REVISION COMPLETED

NEW WORK

invensys Rail

PROJ #: IL2013014
DES BY: J. BRADY
CHK BY: D. ALBRIGHT
DATE: 05-15-13

= NOTE

3000ND2WSR.I01
REV. 03-29-13

CSX TRANSPORTATION
RAIL TRANSPORT GROUP ENGINEERING
COMMUNICATIONS AND SIGNALS

TR-176 (ST. MARIE RD.) 152861W

INDEX AND REVISIONS
OLNEY, IL M.P. BC-217.68

DESIGNED	DIGITIZED	CHECKED	DATE
IRC/JWB	IRC/JWB	IRC/DBA	05-15-13

DESIGN DATE	REV. NO.	DRAWING	SHEET NO	FILE	SHEET
05-15-13	1	-----	-----	BC21768	I01

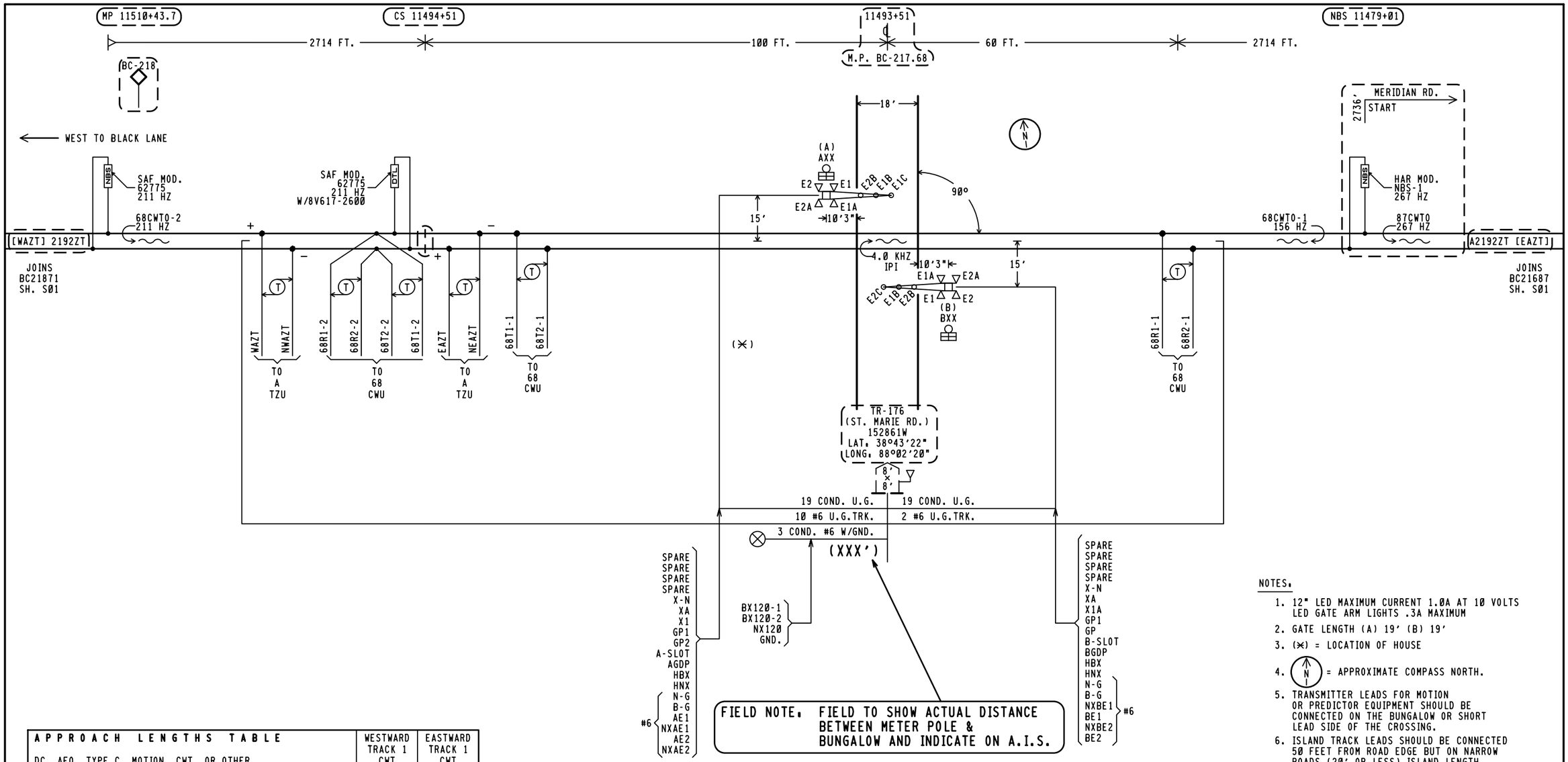

FIELD NOTE. FIELD TO SHOW ACTUAL DISTANCE BETWEEN METER POLE & BUNGALOW AND INDICATE ON A.I.S.

APPROACH LENGTHS TABLE DC, AFO, TYPE C, MOTION, CWT, OR OTHER	WESTWARD TRACK 1 CWT	EASTWARD TRACK 1 CWT
STANDARD MINIMUM WARNING TIME IN SECONDS	25	25
ROADWAY GATE TIME IN SECONDS	5	5
CLEARANCE TIME IN SECONDS	0	0
DOT TRAFFIC LIGHT SIMULTANEOUS PREEMPT TIME IN SECONDS✳	0	0
DESIGNED WARNING TIME FOR TRAINS AT TIME TABLE SPEED	30 SEC.	30 SEC.
DOT TRAFFIC LIGHT ADVANCE PREEMPT TIME IN SECONDS ✳	0	0
CONTROL EQUIPMENT DECISION TIME IN SECONDS	4	4
DESIGNED DETECTION TIME FOR TRAINS AT TIME TABLE SPEED	34 SEC.	34 SEC.
TIME TABLE MAXIMUM TRAIN SPEED IN MILES PER HOUR	50	50
BUFFER SPEED IN MILES PER HOUR	5	5
TOTAL WARNING SYSTEM DESIGN SPEED IN MILES PER HOUR	55	55
APPROACH DISTANCE TO ISLAND EDGE IN FEET	2714	2714
HALF WIDTH OF ISLAND IN FEET	100	60
APPROXIMATE MILE POSTS FOR APPROACH CIRCUIT	218.21	217.15

✳AUTHORIZING AGENCY. NONE
✳DATE OF REQUIREMENT. NONE
✳AMOUNT OF TIME (SEC.). NONE

NOTES.

1. 12" LED MAXIMUM CURRENT 1.0A AT 10 VOLTS LED GATE ARM LIGHTS .3A MAXIMUM
2. GATE LENGTH (A) 19' (B) 19'
3. (✳) = LOCATION OF HOUSE
4. (N) = APPROXIMATE COMPASS NORTH.
5. TRANSMITTER LEADS FOR MOTION OR PREDICTOR EQUIPMENT SHOULD BE CONNECTED ON THE BUNGALOW OR SHORT LEAD SIDE OF THE CROSSING.
6. ISLAND TRACK LEADS SHOULD BE CONNECTED 50 FEET FROM ROAD EDGE BUT ON NARROW ROADS (20' OR LESS) ISLAND LENGTH SHALL BE 120 FEET.
7. WARNING SYSTEM APPROACH CIRCUIT DISTANCES ARE TO BE MEASURED FROM THE ISLAND TRACK CONNECTIONS.

NEW WORK EXCEPT
(- - -) = EXISTING

invensys Rail

PROJ #. IL2013014
DES BY. J. BRADY
CHK BY. D. ALBRIGHT
DATE. 05-15-13

✳✳✳ = OUT
( ) = NOTE

3000ND2WSR.S01
REV. 03-29-13

CSX TRANSPORTATION
RAIL TRANSPORT GROUP ENGINEERING
COMMUNICATIONS AND SIGNALS

TR-176 (ST. MARIE) 152861W

TRACK AND SIGNAL PLAN
OLNEY, IL M.P. BC-217.68

DESIGNED	DIGITIZED	CHECKED	DATE
IRC/JWB	IRC/JWB	IRC/DBA	05-15-13

DESIGN DATE	REV. NO.	DRAWING	SHEET NO	FILE	SHEET
05-15-13	1	-----	-----	BC21768	S01 (A✳)

TOP ROW

XR			XPR			GPR			EOR			POR			ACR		
12	FB	B8	22	F	B36	12	B	B82	12	FB	B81	12	FB	B62	12	B	B77
15	FB	C30	25	F	C30	15	B	C30	15	FB	C30	15	FB	C30	15	B	C30
22						22			32	FB		22	FB		22		
23						25			35	FB		25	FB		25	B	
25	F					32	F					32	F		32	B	
32						35	B					35	F		35	B	
35																	

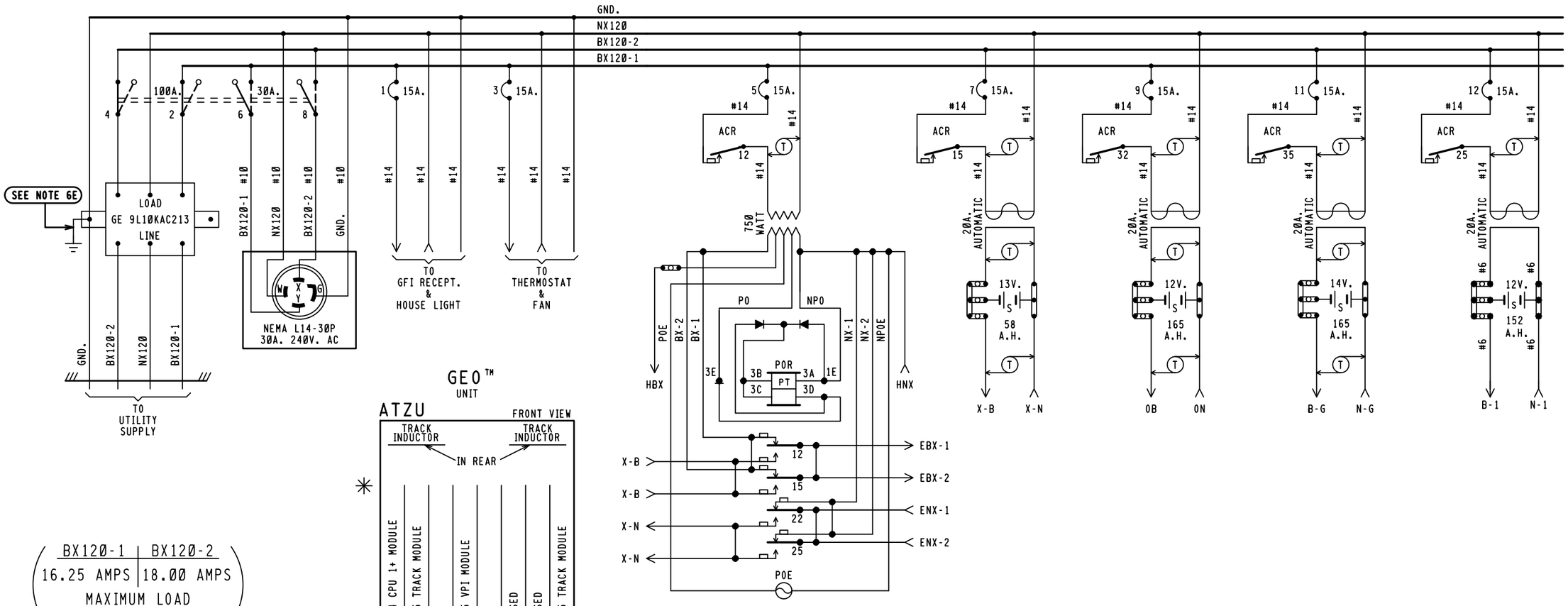

BX120-1	BX120-2
16.25 AMPS	18.00 AMPS

MAXIMUM LOAD
CALCULATED PER SS360

NOTES:

1 - REFERENCES ARE PER SCMS-13.
2 - ARRESTERS ARE PER SS382.
3 - SHELF RELAY PLACEMENT ON CONSIST CHART HAS NO SIGNIFICANCE.
4 - PLUG-IN RELAYS ARE VIEWED FROM THE FRONT OF RACK.
5 - BATTERY A.H. CAPACITY SHOWN IS THE MINIMUM REQUIREMENT.
6 - WIRING
  A - FEED TO ALL BUSSES, LIGHT CIRCUITS,MOTOR CIRCUITS TO BE #10 FLEX.
  B - 120-VOLT FEED FROM ENTRANCE TO POWER BUSS TO BE #10 FLEX.
  C - ALL TRACK WIRES TO BE #10 FLEX.
  D - ALL OTHERS TO BE #16 FLEX UNLESS NOTED.
  E - GROUND WIRE NOT NECESSARY WHEN GE ARRESTER IS MOUNTED ON GROUND PLANE OR METAL ENCLOSURE AFFIXED DIRECTLY TO BUNGALOW METALLIC STRUCTURAL MEMBER.
7 - CIRCUIT INTERRUPTERS 2 & 4 ARE MECHANICALLY INTERLOCKED WITH CIRCUIT INTERRUPTERS 6 & 8.

WILMORE DC-DC CONVERTER
MODEL 1675-12-12-15

INPUT + → OB
INPUT - → ON
OUTPUT + → B
OUTPUT - → N

NEW WORK

invensys Rail

PROJ #. IL2013014
DES BY. J. BRADY
CHK BY. D. ALBRIGHT
DATE. 05-15-13

( ) = EXISTING
( ) = NOTE
✳ = REUSE EXISTING

8'X 8' RELAY HOUSE W/FARADAY SHIELD

CSX TRANSPORTATION
RAIL TRANSPORT GROUP ENGINEERING
COMMUNICATIONS AND SIGNALS

TR-176 (ST. MARIE) 152861W

POWER DISTRIBUTION
OLNEY, IL M.P. BC-217.68

3000ND2WSR.E01
REV. 03-29-13

DESIGNED	DIGITIZED	CHECKED	DATE
IRC/JWB	IRC/JWB	IRC/DBA	05-15-13

DESIGN DATE	REV. NO.	DRAWING	SHEET NO	FILE	SHEET
05-15-13	1	-----	-----	BC21768	E01A

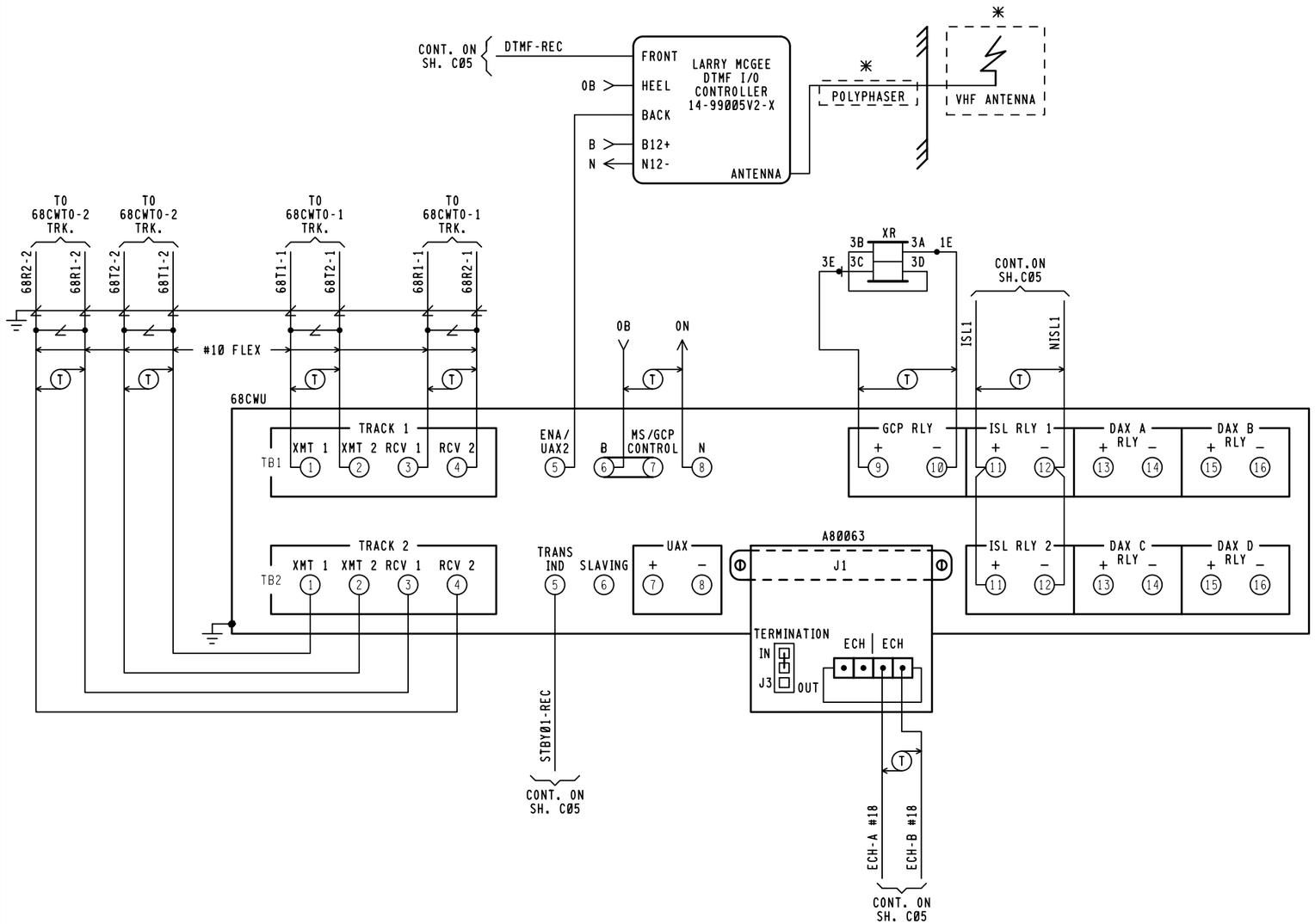

68CWU
3000D2 MODULES REQUIRED

M1	M2	M3	M4	M5	M6	M7	M8	M9	M10	
80211 IPI ISLAND (4.0KHZ)	80211 IPI ISLAND (NOT USED)	80012 TRANSCEIVER	80012 TRANSCEIVER	80013 RELAY DRIVE	80214 PROCESSOR	80255 RECORDER INTERFACE (NOTE 1)	80016 DAX (NOT USED)	80016 DAX (NOT USED)	80020-1 CONTROL INTERFACE	

M11	M12	M13	M14	M15	M16	M17	M18	M19	M20	M21
80211 IPI ISLAND (4.0KHZ)	80211 IPI ISLAND (NOT USED)	80012 TRANSCEIVER	80012 TRANSCEIVER	80013 RELAY DRIVE	80214 PROCESSOR	80255 RECORDER INTERFACE (NOTE 1)	80016 DAX (NOT USED)	80016 DAX (NOT USED)	80020-2 CONTROL INTERFACE	80028 TRANSFER TIMER

FRONT VIEW

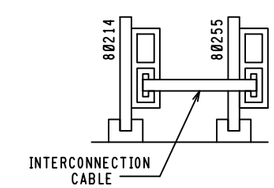

NOTES:

1. INTERCONNECTION CABLE MUST BE INSTALLED BETWEEN 80214 AND 80255 MODULES.

✳ = COMMUNICATIONS TO SUPPLY

PROGRAMMING FOR DTMF RADIO

REMOTE DTMF CROSSING ACTIVATION (ACTIVATES ENTIRE CROSSING)	
TO ACTIVATE PRESS:	861#
TO DE-ACTIVATE PRESS:	861*
(ACTIVATION WILL TIME OUT AFTER 60 SEC.)	

MODULE A80063
NETWORK INTERFACE CONNECTOR

(J1)	(J3 JUMPER)	
ECH1	IN	TERMINATION
ECH2	OUT	ADD NODES

IPI
MODULE 80211

SLOT M1 & M11
4.0 KHZ

PLACE SHORTING BLOCK ACROSS 4.0 KHZ PIN PAIRS

MODULE 80028
S4 DIP SWITCH POSITIONS ✳

SWITCH #	16	8	4	2	1
SWITCH POSITION	UP	DOWN	UP	DOWN	UP

✳MAY BE SET PER FIELD CONDITIONS

MODULE 80028
S1 DIP SWITCH POSITIONS

SWITCH #	A	B	C	D
DAX USED	RIGHT	RIGHT	RIGHT	RIGHT

LEFT INDICATES DAX USED

NEW WORK

invensys Rail

PROJ #: IL2013014
DES BY: J. BRADY
CHK BY: D. ALBRIGHT
DATE: 05-15-13

✳✳✳ = OUT

CSX TRANSPORTATION
RAIL TRANSPORT GROUP ENGINEERING
COMMUNICATIONS AND SIGNALS

TR-176 (ST. MARIE) 152861W

CROSSING DETECTION CIRCUITRY
OLNEY, IL M.P. BC-217.68

DESIGNED	DIGITIZED	CHECKED	DATE
IRC/JWB	IRC/JWB	IRC/DBA	05-15-13

DESIGN DATE	REV. NO.	DRAWING	SHEET NO	FILE	SHEET
05-15-13	1	-----	-----	BC21768	C01 A

3000 GCP APPLICATION DESIGN CARD

EQUIPMENT: 3000 ☐ 3000ND ☐ 3000D2 ■ 3000ND2 ☐

ISLAND FREQUENCY: T1: 4.0 KHZ T2: N/A KHZ 68 CWU

SOFTWARE LEVEL (DISPLAYED DURING BOOT-UP)		☆☆	
NUMBER OF TRACKS (NUMBER OF TRANSCEIVER MODULES, 1 OR 2)		1 ☐	2 ■
FREQUENCY (MS/GCP)	T1:	156 HZ	
	T2:	211 HZ	
UNIDIRECTIONAL / BIDIRECTIONAL	T1:	UNI ■	BI ☐
	T2:	UNI ☐	BI ■
XMIT LEVEL	T1:	HI ■	MED ☐
	T2:	HI ■	MED ☐
PREDICTOR/MOTION SENSOR	T1:	PRED ■	MS ☐
	T2:	PRED ■	MS ☐
WARNING TIME SELECTED	T1:	30 SEC.	
	T2:	30 SEC.	
APPROACH DISTANCE SELECTED	T1:	2714 FT.	
	T2:	2714 FT.	
APPROACH DISTANCE COMPUTED	T1:	NOT REQUIRED *	
	T2:	NOT REQUIRED *	
UAX PICKUP DELAY (UAX1) (0 = OFF)		0 SEC.	
ENA/UAX2 DELAY (0 = ENA)		0 SEC.	
ISLAND DISTANCE (BETWEEN FEED WIRES)	T1:	160' ☆ FT.	
	T2:	FT.	
NUMBER OF DAX'S		0 ■	1 ☐ 2 ☐ 3 ☐ 4 ☐
DAX A TRACK ASSIGNMENT		T1 ☐	T2 ☐
DAX A DISTANCE (0 = PREEMPT)		FT.	
DAX A WARNING TIME		SEC.	
DAX B TRACK ASSIGNMENT		T1 ☐	T2 ☐
DAX B DISTANCE (0 = PREEMPT)		FT.	
DAX B WARNING TIME		SEC.	
DAX C TRACK ASSIGNMENT		T1 ☐	T2 ☐
DAX C DISTANCE (0 = PREEMPT)		FT.	
DAX C WARNING TIME		SEC.	
DAX D TRACK ASSIGNMENT		T1 ☐	T2 ☐
DAX D DISTANCE (0 = PREEMPT)		FT.	
DAX D WARNING TIME		SEC.	
SLAVING MASTER/SLAVE		MASTER ■	SLAVE ☐
PASSWORD ENABLED		DISABLED ■	ENABLED ☐
RECORDER INSTALLED		NOT INSTALLED ■	INSTALLED ☐
RS-232-C BAUD RATE		BPS	
RS-232-C DATE BITES		7 ☐	8 ☐
RS-232-C STOP BITS		1 ☐	2 ☐
RS-232-C PARITY		NONE ☐	MARK ☐
		ODD ☐ EVEN ☐	SPACE ☐
DATE (E.G., MON 13 MAY 1991)		NOT REQUIRED *	
TIME (E.G., 06:25:43 PM)		NOT REQUIRED *	
DAYLIGHT SAVINGS		ON ■	OFF ☐

EXPANDED PROGRAMMING DESIGN

SWITCH TO MS (ENTER EZ VALUE)	T1:	10 EZ	
	T2:	10 EZ	
TRANSFER DELAY MS TO GCP (0 = OFF)	T1:	0 SEC.	
	T2:	0 SEC.	
PRIME PREDICTION OFFSET (0 = OFF)	T1:	0 FT.	
	T2:	0 FT.	
PICKUP DELAY PRIME		15 SEC.	
PICKUP DELAY DAX A		0 SEC.	
PICKUP DELAY DAX B		0 SEC.	
PICKUP DELAY DAX C		0 SEC.	
PICKUP DELAY DAX D		0 SEC.	
COMPENSATION VALUE	T1:	NOT REQUIRED **	
COMPENSATION VALUE	T2:	NOT REQUIRED **	
ENHANCED DETECTION (ED)	T1:	ON ☐	OFF ■
	T2:	ON ☐	OFF ■
BACK TO BACK T1 AND T2 (WHEN ED IS ON)		NO ■	YES ☐
STATION STOP TIMER (WHEN ED IS ON)	T1:	N/A (SEE NOTE1) SEC.	
	T2:	N/A SEC.	
# OF TRACK WIRES - 4 OR 6	T1:	4 ■	6 ☐
	T2:	4 ■	6 ☐
LOW EX ADJUSTMENT	T1:	0	
	T2:	0	
LOW EZ DETECTION	T1:	ON ☐	OFF ■
	T2:	ON ☐	OFF ■
LOW EZ DETECTION TIMER	T1:	N/A (SEE NOTE2) MIN.	
	T2:	N/A MIN.	
POSITIVE START (0 = OFF) (ENTER EZ VALUE)	T1:	0 EZ	
	T2:	0 EZ	
POSITIVE START TIMEOUT (0 = NONE) (WHEN POTISIVE START IS ON)	T1:	0 MIN.	
	T2:	0 MIN.	
SET AT OPERATION		NORMAL ■	DIAGNOSTIC ☐
DIAGNOSTIC MESSAGES		ON ■	OFF ☐
DAX MESSAGES (SEE NOTE 3)		ON ☐	OFF ■
ADVANCE PREEMP TIMER (0 = OFF)		0 SEC.	

** THE COMPENSATION VALUE IS PROVIDED BY THE 3000 GCP SYSTEM AND NO ADDITIONAL PROGRAMMING IS NORMALLY REQUIRED.

* PROGRAMMED AT INSTALLATION DURING CALIBRATION PROCEDURE

☆ = 120' MINIMUM ISLAND DISTANCE TO BE ENTERED BY FIELD PERSONNEL FOR NON-DAXING APPLICATIONS WHEN ROAD IS 20' OR LESS WIDE.

☆☆ = INDICATE ON AS-IN-SERVICE DRAWINGS

NOTES:

1. WHEN ED SET TO OFF, DEFAULT NOT DISPLAYED
   WHEN ED SET TO ON, DEFAULT IS 10 SEC.
2. WHEN LOW EZ DETECTION SET TO OFF, DEFAULT NOT DISPLAYED
   WHEN LOW EZ DETECTION SET TO ON, DEFAULT IS 10 MIN.
3. WHEN A 3000D2 WITH DAX, SET DAX MESSAGES ON.
4. NODES ARE ASSIGNED BY SEAR II UNIT PER TABLE.

NEW WORK

invensys Rail

PROJ #: IL2013014
DES BY: J. BRADY
CHK BY: D. ALBRIGHT
DATE: 05-15-13

✕✕✕ = OUT

3000ND2WSR.C02
REV. 03-29-13

CSX TRANSPORTATION
RAIL TRANSPORT GROUP ENGINEERING
COMMUNICATIONS AND SIGNALS

TR-176 (ST. MARIE) 152861W

DETECTION DEVICE PROGRAM
OLNEY, IL M.P. BC-217.68

DESIGNED	DIGITIZED	CHECKED	DATE
IRC/JWB	IRC/JWB	IRC/DBA	05-15-13

DESIGN DATE	REV. NO.	DRAWING	SHEET NO	FILE	SHEET
05-15-13	1	-----	-----	BC21768	C02A

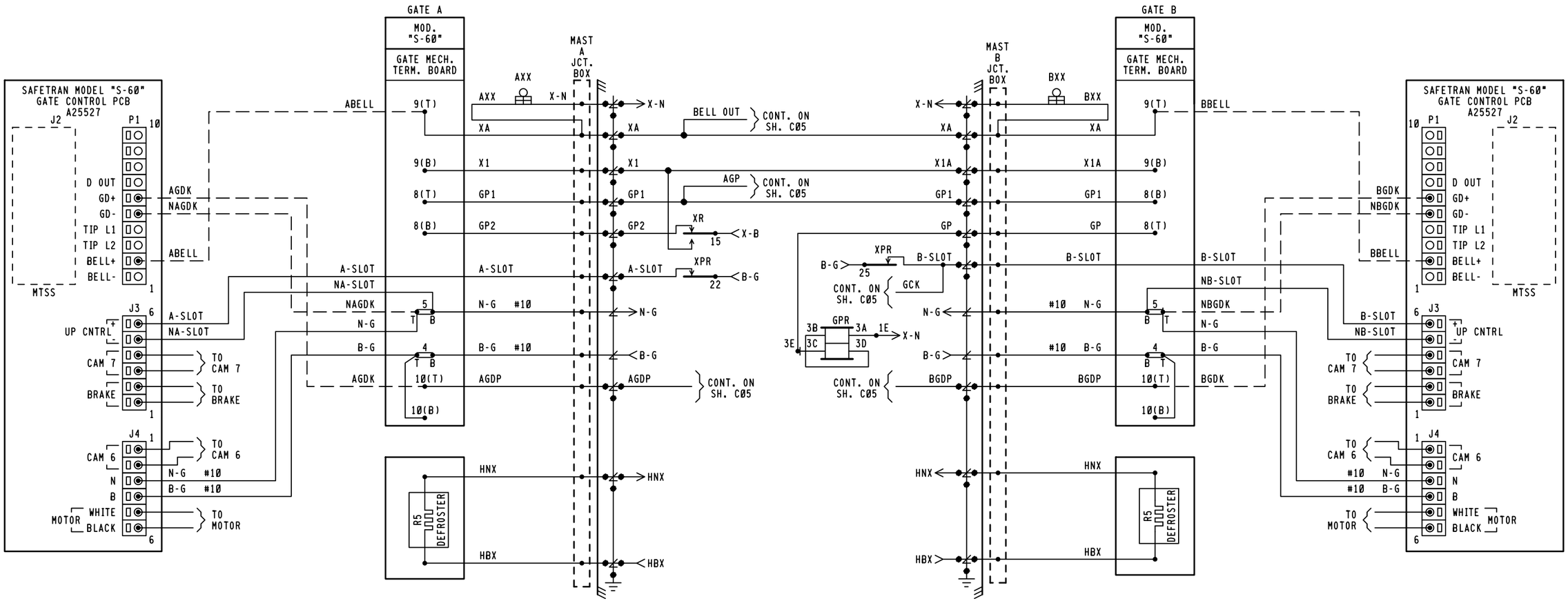

NEW WORK

invensys Rail

PROJ #: IL2013014
DES BY: J. BRADY
CHK BY: D. ALBRIGHT
DATE: 05-15-13

XXX = OUT

3000ND2WSR.C03
REV. 03-29-13

CSX TRANSPORTATION
RAIL TRANSPORT GROUP ENGINEERING
COMMUNICATIONS AND SIGNALS

TR-176 (ST. MARIE) 152861W

CROSSING WARNING DEVICE GATE CIRCUITRY
OLNEY, IL M.P. BC-217.68

DESIGNED	DIGITIZED	CHECKED	DATE
IRC/JWB	IRC/JWB	IRC/DBA	05-15-13

DESIGN DATE	REV. NO.	DRAWING	SHEET NO	FILE	SHEET
05-15-13	1	-----	-----	BC21768	C03 A

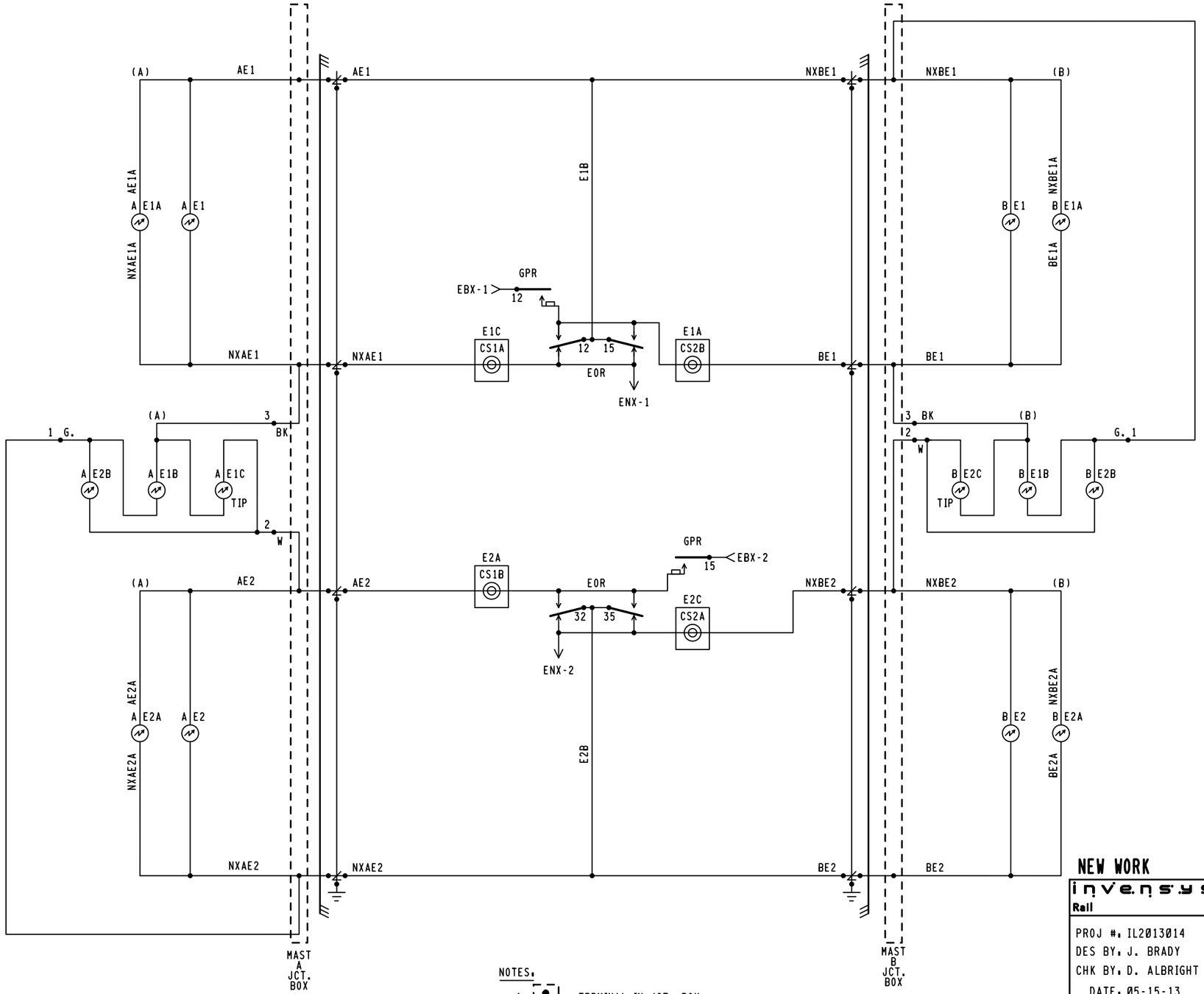

NOTES:

1. = TERMINAL IN JCT. BOX
2. WHEN 7 OR MORE LIGHTS ON A SINGLE STRUCTURE REFER TO SS-382 FOR REQUIRED ARRESTER RATING.

NEW WORK

invensys Rail

PROJ #: IL2013014
DES BY: J. BRADY
CHK BY: D. ALBRIGHT
DATE: 05-15-13

XXX = OUT

3000ND2WSR.C04
REV. 03-29-13

CSX TRANSPORTATION

RAIL TRANSPORT GROUP ENGINEERING
COMMUNICATIONS AND SIGNALS

TR-176(ST. MARIE) 152861W

CROSSING WARNING DEVICE LIGHT CIRCUITRY
OLNEY, IL M.P. BC-217.68

DESIGNED	DIGITIZED	CHECKED	DATE
IRC/JWB	IRC/JWB	IRC/DBA	05-15-13

DESIGN DATE	REV. NO.	DRAWING	SHEET NO	FILE	SHEET
05-15-13	1	-----	-----	BC21768	C04 A

NOTE FOR CADD DESIGN ONLY.

( )

REPRESENTS CSXT DEFAULT USES FOR EACH INPUT AND CHANNEL I.D. RE-SPELLING OF I.D. SHOWN ON THIS PAGE IS DESIRABLE TO MATCH PROGRAMMING ON THE NEXT SHEET. WHEN INPUTS ARE SPARE, THE CHANNEL I.D. IS (SP) ON THIS SHEET.

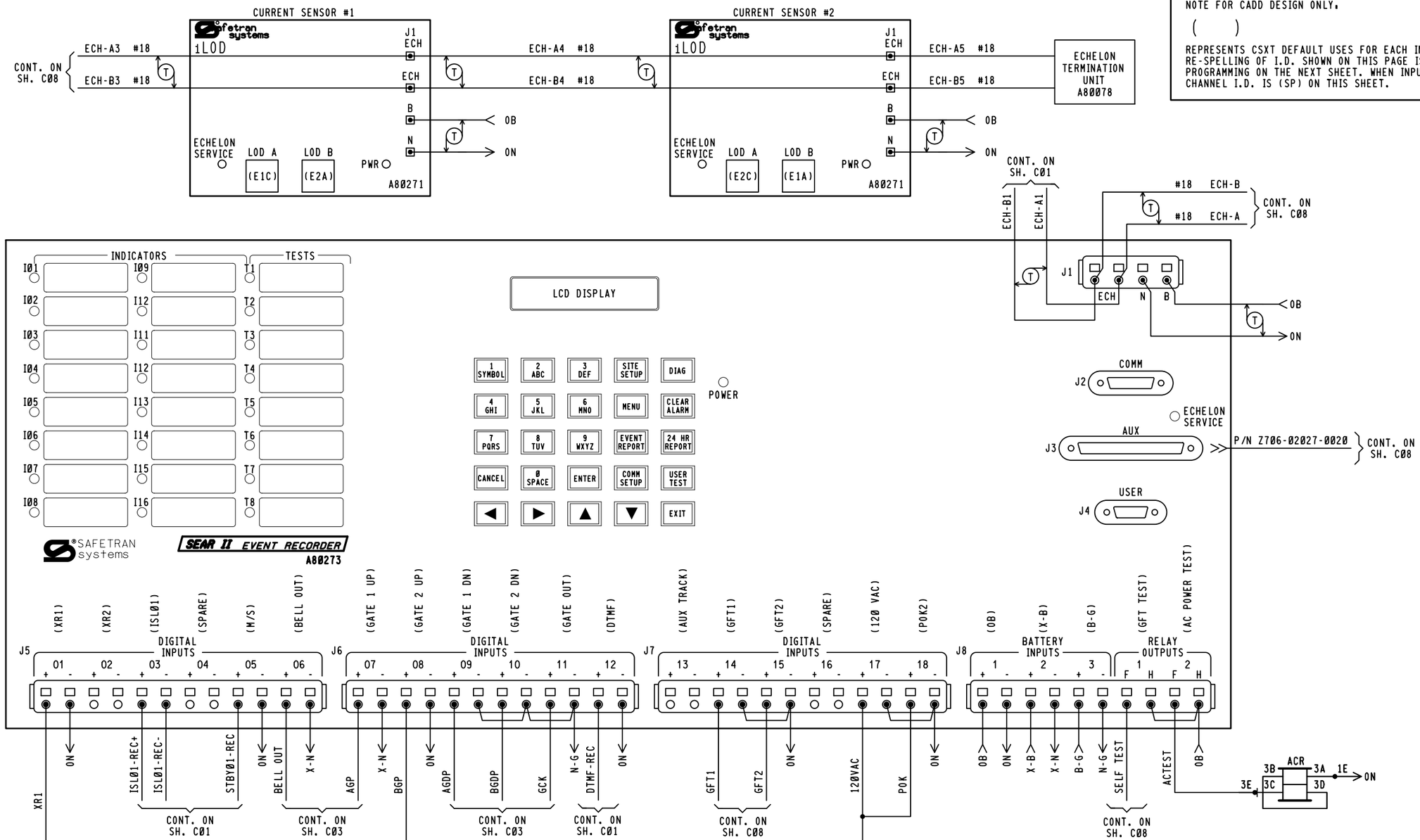

NEW WORK

invensys Rail

PROJ #: IL2013014
DES BY: J. BRADY
CHK BY: D. ALBRIGHT
DATE: 05-15-13

XXX = OUT

3000ND2WSR.C05
REV. 03-29-13

CSX TRANSPORTATION
RAIL TRANSPORT GROUP ENGINEERING
COMMUNICATIONS AND SIGNALS

TR-176 (ST. MARIE) 152861W

SEAR II CIRCUITS
OLNEY, IL M.P. BC-217.68

DESIGNED	DIGITIZED	CHECKED	DATE
IRC/JWB	IRC/JWB	IRC/DBA	05-15-13

DESIGN DATE	REV. NO.	DRAWING	SHEET NO	FILE	SHEET
05-15-13	1	-----	-----	BC21768	C05

	DEFAULTS AND/OR STYLE	FIELD RECORD
SEAR II EXECUTIVE PROGRAM	VERSION: 9V645-A01Y.BIN	VERSION: _____
APPLICATION PROGRAM (IF LOADED)	VERSION: 9V736-A02A	VERSION: _____

SITE SET UP OPTIONS		
OPTION	SELECTION	
DATE	XX-XX-XXXX	
TIME	[XX:XX:XX]	
DAYLIGHT SAVINGS TIME	YES ■ NO ☐	
TIME ZONE	■ EST ☐ CST	
SITE NAME	TR-176 (ST. MARIE RD.)	
MILEPOST	BC-217.68	
DOT NUMBER	152861W	
TESTER TYPE	■ CROSSING ☐ WAYSIDE	
DATE FORMAT	■ MM-DD-YYYY ☐ DD-MM-YYYY	
TEMP FORMAT	■ FAHRENHEIT ☐ CELSIUS	
INDICATE HOLDOFF	0	
INDICATE REFRESH	60	
SITE TYPE	☐ NO COMMUNICATION ☐ DIAL-UP ■ COLLECTOR ☐ NODE ☐ BULLHORN/MODE ☐ CDS902X	
SITE ATCS ADDRESS	7.125.432.034.99.01 (7.RRR.LLL.GGG.99.01)	NOTE 5
OFFICE ADDRESS	2.125.00.0000 (2.RRR.NN.DDDD)	
OFFICE SITE ADDRESS	NA	
BACK UP SITE ADDRESS 1	NA	
BACK UP SITE ADDRESS 2	NA	
POLL ID (1-99)	1	
GEN/ATCS MODE	☐ GENISYS ■ GEN/ATCS	
XID DISABLED	■ YES ☐ NO	
OFFICE COM. DEVICE	☐ DIRECT ☐ MCM (RS232) ☐ MCM (ECH) ■ WAG (ECHELON) ☐ DIAL UP (RS232) ☐ S200 RADIO (RS422)	NOTE 6
RADIO ATCS ADDRESS	7.125.432.034.99.01	
OFFICE PHONE NUMBER	1-XXX-XXX-XXXX	
INIT. STRING		
FIELD COMM	☐ VHF (ECH) ☐ VHF (RS232) ☐ WAG (ECH) ☐ SS (RS232) ■ NONE	
USER PORT	BAUD RATE (9600)	
AUX PORT	BAUD RATE (9600)	NOTE 7
COMM PORT	BAUD RATE (9600)	

NOTES:

1. LARGE CONFIGURATION ASSIGNS RECORDER INPUTS FOR USE WHEN DIGITAL I/O MODULE REQUIRED.
2. IF WARNING DEVICE = NONE MAIN/STANDBY OPTION NOT SHOWN.
3. IF VHF COMMUNICATIONS = NO THEN DTMF ACTIVATION AND CHANNEL OPTIONS ARE NOT SHOWN.
4. LAST 3 DIGITS OF DOT NO. FOR FIRST ACTIVATION CODE.
5. DEFAULT ADDRESS 7.620.100.100.99.01 USED FOR STAND ALONE LOCATIONS.
6. OPTIONS NOT SHOWN IF SITE TYPE = NO COMMUNICATIONS.
7. FORMAT AS: BAUD, DATA BITS, PARITY STOP BITS, FLOW CONTROL.

SITE SET UP OPTIONS CONT.		
	OPTION	SELECTION
	RAILROAD NUMBER	125
NOTE 1	CROSSING CONFIGURATION	STANDARD ■ LARGE ☐ REMOTE ☐ SPLIT GATE ☐ ISL ONLY ☐ CP COLLECTOR ☐
	NUMBER OF XR INPUTS	0 ☐ 1 ■ 2 ☐ 3 ☐ 4 ☐
	NUMBER OF ISL INPUTS	0 ☐ 1 ■ 2 ☐ 3 ☐ 4 ☐
	CONSTANT WARNING DEVICE	GCP ■ OTHER ☐ NONE ☐
	TOTAL NUMBER OF GCP NODES	1 ■ 2 ☐ 3 ☐ 4 ☐ 5 ☐
	NUMBER OF REDUNDANT GCP	1 ■ 2 ☐ 3 ☐ 4 ☐
	CROSSING CONTROLLER 1	SSCC IIIA / PLUS ☐ SSCC IV ☐ OTHER ☐ NONE ■
	POK2	YES ■ NO ☐
NOTE 2	MAIN / STANDBY	YES ■ NO ☐
	AUXILIARY TRACKS	0 ■ 1 ☐ 2 ☐
	ENTRANCE GATE	0 ☐ 1 ☐ 2 ■
	GATE POSITION FAIL 10-60 SEC	30
	NUMBER OF UAX INPUTS	0 ■ 1 ☐ 2 ☐
	BATTERY BANKS	1 ☐ 2 ☐ 3 ☐ 4 ■ 5 ☐ 6 ☐
	OB RESOLUTION	.2 ■ .5 ☐ 1.0 ☐
	X-B RESOLUTION	.2 ■ .5 ☐ 1.0 ☐ NOT PRESENT ☐
	B-G RESOLUTION	.2 ☐ .5 ☐ 1.0 ■ NOT PRESENT ☐
	X-B2 RESOLUTION	.2 ☐ .5 ☐ 1.0 ☐ NOT PRESENT ■
	B-G2 RESOLUTION	.2 ☐ .5 ☐ 1.0 ☐ NOT PRESENT ■
	X-B3 RESOLUTION	.2 ☐ .5 ☐ 1.0 ☐ NOT PRESENT ■
	PREEMPTION	NORMAL ☐ ADVANCED ☐ NO ■
	KDR INPUT	YES ■ NO ☐
NOTE 3	VHF COMMUNICATOR	YES ☐ NO ■
	ACTIVATION TIMEOUT (30 TO 600 SECONDS)	60
	1LOD MODULES	0 ☐ 1 ☐ 2 ■ 3 ☐ 4 ☐ 5 ☐ 6 ☐
	ANY LED BULBS	NO ☐ YES ■
	AUTO INSPECTIONS	YES ■ NO ☐
	BELL ON	GATES LOWERING ■ GATES MOVING ☐ ALWAYS ☐
	GROUND FAULT DETECTORS	YES ■ NO ☐
	BATTERIES ON GFT1	1 ☐ 2 ■
	FULL APPROACH MOVE ALARMS	ACTIVATED ■ DO NOT ACTIVATE ☐

LIT BULB COUNT ON EACH CIRCUIT	NO.	TYPE OF BULB	CURRENT READING IN AMP. AT APPROX. 10.0 V BULB VOLTAGE
CURRENT SENSOR (1) E1C: LAMP SET UP	1A	☐BULBS ■LED	X.X
CURRENT SENSOR (1) E2A: LAMP SET UP	1B	☐BULBS ■LED	X.X
CURRENT SENSOR (2) E2C: LAMP SET UP	2A	☐BULBS ■LED	X.X
CURRENT SENSOR (2) E1A: LAMP SET UP	2B	☐BULBS ■LED	X.X

MEASURE BATTERY VOLTAGE AT INPUT		
BATTERY VOLTAGE	OB	XXXX VOLTS
BATTERY VOLTAGE	X-B	XXXX VOLTS
BATTERY VOLTAGE	B-G	XXXX VOLTS

NEW WORK

invensys Rail

PROJ #: IL2013014
DES BY: J. BRADY
CHK BY: D. ALBRIGHT
DATE: 05-15-13

~~XXX~~ = OUT

CSX TRANSPORTATION
RAIL TRANSPORT GROUP ENGINEERING
COMMUNICATIONS AND SIGNALS

TR-176 (ST. MARIE) 152861W

SEAR II CONFIGURATION AND FUNCTIONS
OLNEY, IL M.P. BC-217.68

3000ND2WSR.C06
REV. 03-29-13

DESIGNED	DIGITIZED	CHECKED	DATE
IRC/JWB	IRC/JWB	IRC/DBA	05-15-13

DESIGN DATE	REV. NO.	DRAWING	SHEET NO	FILE	SHEET
05-15-13	1	-----	-----	BC21768	C06 A

DISCRETE INPUTS	DI 01	DI 02	DI 03	DI 04	DI 05	DI 06
CHANNEL	1	2	3	4	5	6
NAME	XR1	XR2	ISLAND 1 (TRACK)		STANDBY	BELL OUT (BELL PWR)
TAG	XR1 (XR)	XR2	ISL1	SP	M/S	BELL OUT (BELL PWR)
OFF NAME	DOWN (XR)	(NOT USED)	DOWN (ISL1)		DOWN (STANDBY)	OFF (BELL PWR)
ON NAME	UP (XR)	(NOT USED)	UP (ISL1)		UP (MAIN)	ON (BELL PWR)
ON DEBOUNCE TIME	100 ms	1000 ms	100 ms	1000 ms	100 ms	100 ms
OFF DEBOUNCE TIME	100 ms	1000 ms	100 ms	1000 ms	100 ms	100 ms
TOGGLE PERIOD	1000 ms	1000 ms	1000 ms	1000 ms	1000 ms	1000 ms

TSS INPUTS	DI 07	DI 08	DI 09	DI 10
CHANNEL	7	8	9	10
NAME	AGP	BGP	AGDP	BGDP
TAG	AGP (GP)	BGP (GP)	AGDP	BGDP
OFF NAME	LIGHTS FLASH	LIGHTS FLASH	NOT HORIZ	NOT HORIZ
ON NAME	GATE VERTICAL	GATE VERTICAL	GATE HORIZ	GATE HORIZ
ON DEBOUNCE TIME	100 ms	100 ms	100 ms	100 ms
OFF DEBOUNCE TIME	100 ms	100 ms	100 ms	100 ms
TOGGLE PERIOD	1000 ms	1000 ms	1000 ms	1000 ms

DISCRETE INPUTS	DI 11	DI 12	DI 13
CHANNEL	11	12	13
NAME	GATE CONTROL	DTMF	AUX TRACK
TAG	GCOUT1 (GCK)	DTMF-REC	AUX
OFF NAME	OFF (DESCENT)	OFF (NO GATE KEYED)	(NOT USED)
ON NAME	ON (ASCENT ON)	ON (ACTIVATE)	(NOT USED)
ON DEBOUNCE TIME	100 ms	100 ms	1000 ms
OFF DEBOUNCE TIME	100 ms	100 ms	1000 ms
TOGGLE PERIOD	1000 ms	1000 ms	1000 ms

GFT INPUTS	DI 14	DI 15
CHANNEL	14	15
NAME	GND FAULT TESTER 1 (GFT1,2)	GND FAULT TESTER 2 (GFT3,4)
TAG	GFT1 (GFT1 DATA)	GFT2 (GFT2 DATA)
BATTERY 1 NAME	OB (GND FAULT)	B-G (GND FAULT)
BATTERY 1 TAG	OB (GND FAULT)	B-G (GND FAULT)
BATTERY 2 NAME	X-B (GND FAULT)	SP.
BATTERY 2 TAG	X-B (GND FAULT)	SP.

DISCRETE INPUTS	DI 16	DI 17	DI 18
CHANNEL	16	17	18
NAME		120 VAC	POK2
TAG	SP	120 VAC	POK2
OFF NAME		OFF (ALL POWER OFF)	OFF (ALL POWER OFF)
ON NAME		ON (ALL POWER ON)	ON (ALL POWER ON)
ON DEBOUNCE TIME	1000 ms	100 ms	100 ms
OFF DEBOUNCE TIME	1000 ms	100 ms	100 ms
TOGGLE PERIOD	1000 ms	1000 ms	1000 ms

BATTERY INPUTS	BI1	BI2	BI3
CHANNEL	1	2	3
NAME	OB (ELECTRONIC BATT)	X-B (BULB BATT)	B-G (GATE BATT)
TAG	OB	X-B	B-G
SAMPLE PERIOD (ms)	500 (ms)	500 (ms)	500 (ms)
RESOLUTION (V)	0.2 (VOLTS)	0.2 (VOLTS)	1.0 (VOLTS)
AVGERAGING SAMPLES	32 SAMPLES	32 SAMPLES	32 SAMPLES

RELAYS	R01	R02
CHANNEL	1	2
NAME	GFT TEST	AC POWER TEST (ACRLY)
TAG	SELF TEST	AC POWER TEST (ACRLY)
OFF STATE NAME	NOT TESTING	OFF (ACR DN)
ON STATE NAME	TESTING	ON (ACR UP)
UNKNOWN STATE NAME	PULSE	PULSE
ON PULSE TIME (s)	1 (s)	1 (s)
OFF PULSE TIME (s)	1 (s)	1 (s)
TOGGLE PERIOD (s)	1 (s)	1 (s)
DUTY CYCLE	50	50

NEW WORK

invensys Rail

PROJ #: IL2013014
DES BY: J. BRADY
CHK BY: D. ALBRIGHT
DATE: 05-15-13

~~XXX~~ = OUT

NOTE: ( ) DENOTES NOMENCLATURE FOR CLARIFICATION AND WILL NOT DISPLAY ON LOG REPORTS.

CSX TRANSPORTATION
RAIL TRANSPORT GROUP ENGINEERING
COMMUNICATIONS AND SIGNALS

TR-176 (ST. MARIE) 152861W

SEAR II CHANNELS
OLNEY, IL M.P. BC-217.68

3000ND2WSR.C07
REV. 03-29-13

DESIGNED	DIGITIZED	CHECKED	DATE
IRC/JWB	IRC/JWB	IRC/DBA	05-15-13

DESIGN DATE	REV. NO.	DRAWING	SHEET NO	FILE	SHEET
05-15-13	1	-----	-----	BC21768	C07A

WAYSIDE ACCESS GATEWAY CONFIGURATION	
SITE ATCS ADDRESS	7.125.432.034.01.01 7.125.LLL.GGG.SS.DD
SERIAL INTERFACE	9600,NONE,8,1/NOFLOW
SERIAL FORMAT	RAW
WAG TEST MODE	DISABLED
ECHELON ADDRESS	01.01
UDP PORTS	5000, 5001, 5002, 5003
ROUTE TABLE EXPIRY	5400 SEC
BROADCAST MEDIUM	IP ETHERNET
TCP PORTS	6001
DHCP SERVER	DISABLED
IP ADDRESS	192.168.13.1
TYPE 7 ROUTE LENGTH	12--7RRRLLLGGGSS
IP NETWORK MASK	255.255.255.000

NOTE TO INSPECTOR,
AT INSTALLATION OF CDMA BY COM.
MARK-UP CONFIGURATION TABLE FOR
AS IN SERVICE PLANS

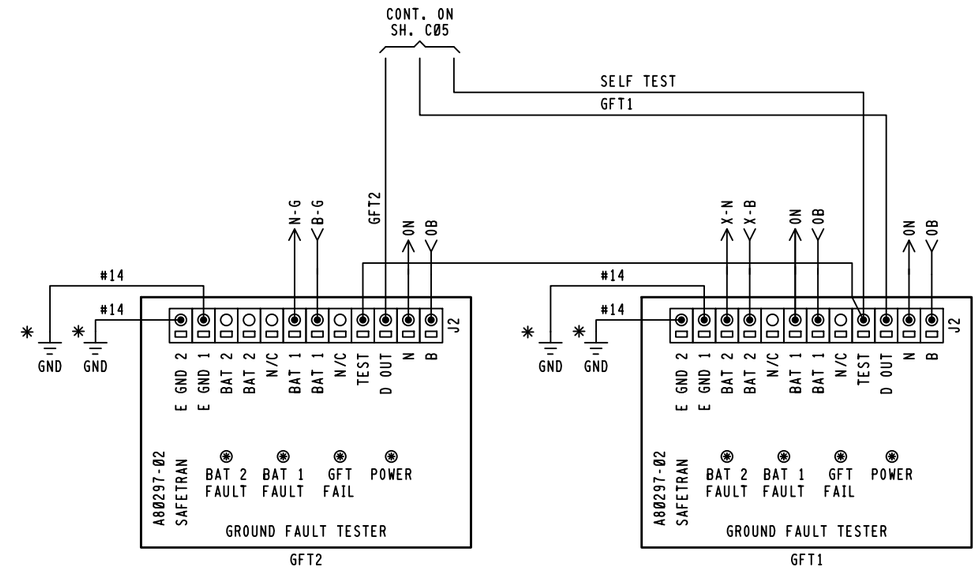

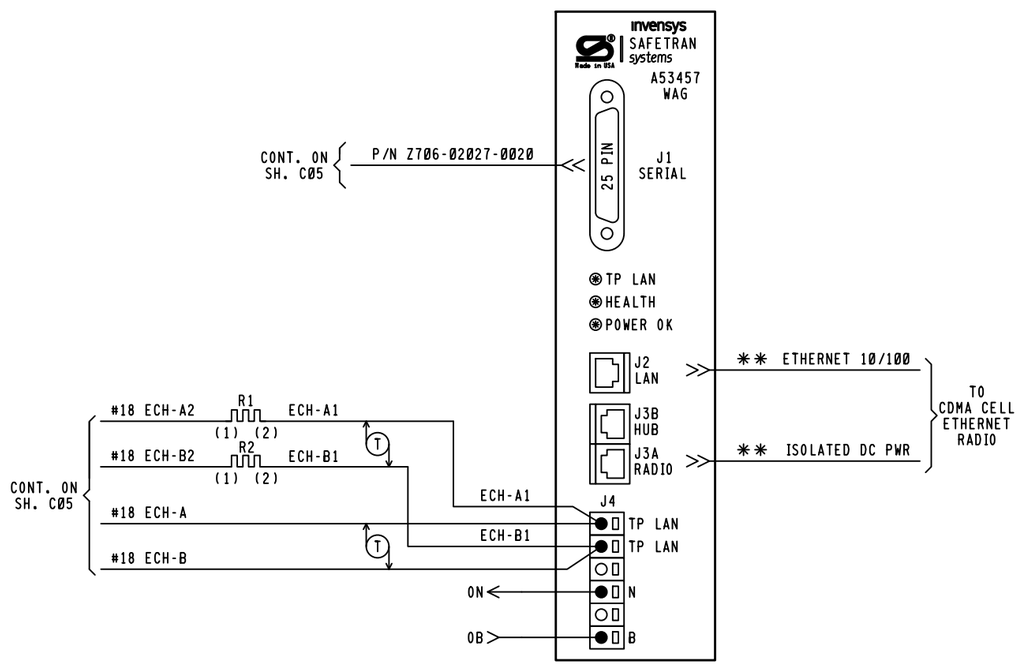

COMM NOTES,

1. WAG J3A PINOUTS,
   4 & 5 = +12VDC RADIO OUT
   7 & 8 = GND RADIO RETURN
2. WAG AND SEARII ECHELON COMM
   THROUGH GCP3000 LONTALK
   PROTOCOL CONNECTION

NOTE,

1. ALL WIRING #16 UNLESS NOTED OTHERWISE.
2. * = EARTH GROUND REF. TERMINALS REQUIRED FOR DETECTION. DO NOT JUMPER TERMINALS. MUST BE CONNECTED TO DIFFERENT POINTS OF BUNGALOW.
3. ** = TO BE PROVIDED BY COMMUNICATIONS
3. R1 & R2 -0.5 WATT, 20 OHM RESISTOR

NEW WORK

invensys Rail

PROJ #, IL2013014
DES BY, J. BRADY
CHK BY, D. ALBRIGHT
DATE, 05-15-13

= NOTE

3000ND2WSR.C08
REV. 03-29-13

CSX TRANSPORTATION
RAIL TRANSPORT GROUP ENGINEERING
COMMUNICATIONS AND SIGNALS

TR-176 (ST. MARIE) 152861W

WAYSIDE ACCESS GATEWAY
OLNEY, IL M.P. BC-217.68

DESIGNED	DIGITIZED	CHECKED	DATE
IRC/JWB	IRC/JWB	IRC/DBA	05-15-13

DESIGN DATE	REV. NO.	DRAWING	SHEET NO	FILE	SHEET
05-15-13	1	-----	-----	BC21768	C08

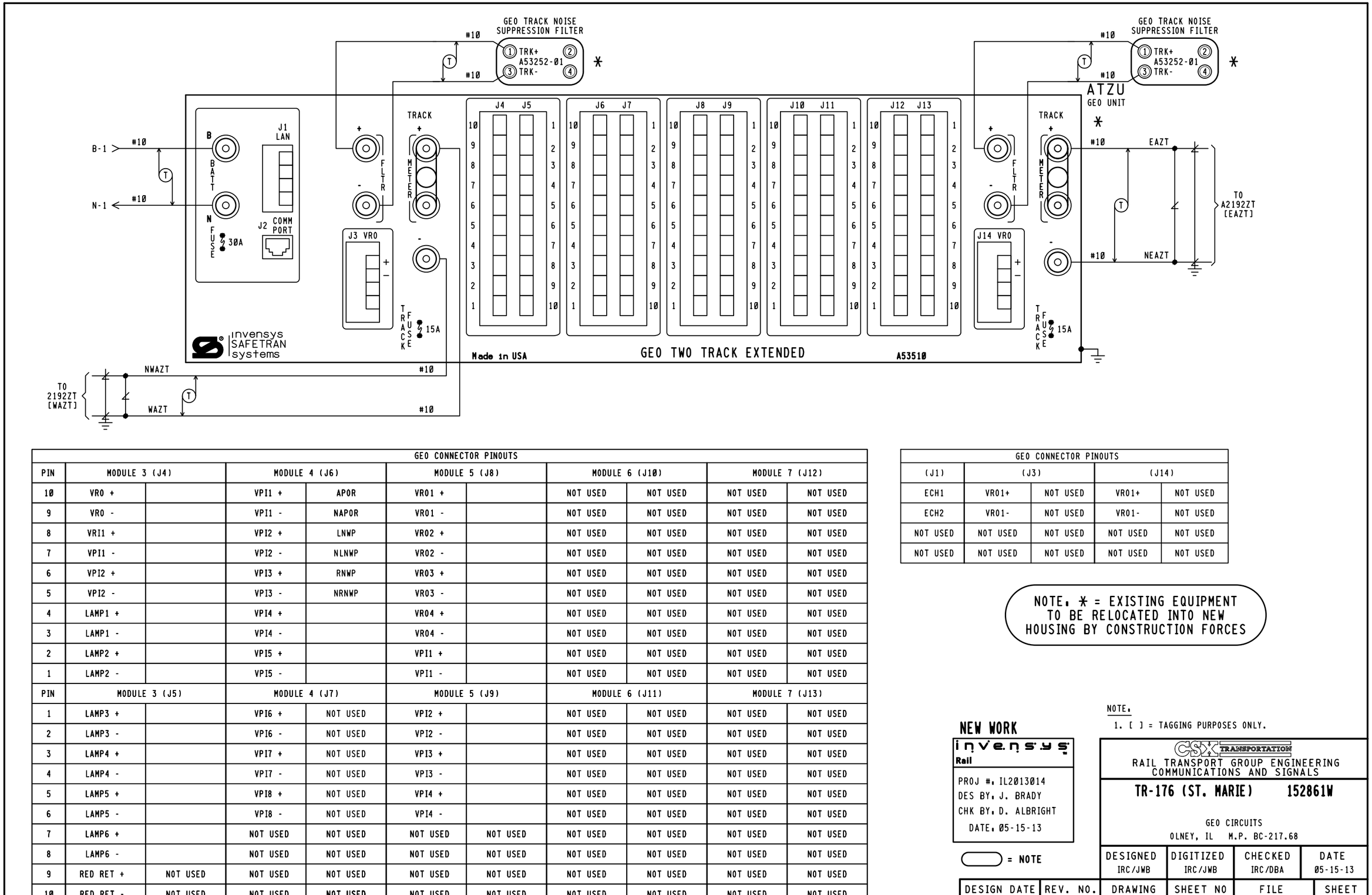

GEO CONNECTOR PINOUTS										
PIN	MODULE 3 (J4)		MODULE 4 (J6)		MODULE 5 (J8)		MODULE 6 (J10)		MODULE 7 (J12)	
10	VRO +		VPI1 +	APOR	VRO1 +		NOT USED	NOT USED	NOT USED	NOT USED
9	VRO -		VPI1 -	NAPOR	VRO1 -		NOT USED	NOT USED	NOT USED	NOT USED
8	VRI1 +		VPI2 +	LNWP	VRO2 +		NOT USED	NOT USED	NOT USED	NOT USED
7	VPI1 -		VPI2 -	NLNWP	VRO2 -		NOT USED	NOT USED	NOT USED	NOT USED
6	VPI2 +		VPI3 +	RNWP	VRO3 +		NOT USED	NOT USED	NOT USED	NOT USED
5	VPI2 -		VPI3 -	NRNWP	VRO3 -		NOT USED	NOT USED	NOT USED	NOT USED
4	LAMP1 +		VPI4 +		VRO4 +		NOT USED	NOT USED	NOT USED	NOT USED
3	LAMP1 -		VPI4 -		VRO4 -		NOT USED	NOT USED	NOT USED	NOT USED
2	LAMP2 +		VPI5 +		VPI1 +		NOT USED	NOT USED	NOT USED	NOT USED
1	LAMP2 -		VPI5 -		VPI1 -		NOT USED	NOT USED	NOT USED	NOT USED
PIN	MODULE 3 (J5)		MODULE 4 (J7)		MODULE 5 (J9)		MODULE 6 (J11)		MODULE 7 (J13)	
1	LAMP3 +		VPI6 +	NOT USED	VPI2 +		NOT USED	NOT USED	NOT USED	NOT USED
2	LAMP3 -		VPI6 -	NOT USED	VPI2 -		NOT USED	NOT USED	NOT USED	NOT USED
3	LAMP4 +		VPI7 +	NOT USED	VPI3 +		NOT USED	NOT USED	NOT USED	NOT USED
4	LAMP4 -		VPI7 -	NOT USED	VPI3 -		NOT USED	NOT USED	NOT USED	NOT USED
5	LAMP5 +		VPI8 +	NOT USED	VPI4 +		NOT USED	NOT USED	NOT USED	NOT USED
6	LAMP5 -		VPI8 -	NOT USED	VPI4 -		NOT USED	NOT USED	NOT USED	NOT USED
7	LAMP6 +		NOT USED	NOT USED	NOT USED	NOT USED	NOT USED	NOT USED	NOT USED	NOT USED
8	LAMP6 -		NOT USED	NOT USED	NOT USED	NOT USED	NOT USED	NOT USED	NOT USED	NOT USED
9	RED RET +	NOT USED	NOT USED	NOT USED	NOT USED	NOT USED	NOT USED	NOT USED	NOT USED	NOT USED
10	RED RET -	NOT USED	NOT USED	NOT USED	NOT USED	NOT USED	NOT USED	NOT USED	NOT USED	NOT USED

GEO CONNECTOR PINOUTS				
(J1)	(J3)		(J14)	
ECH1	VRO1+	NOT USED	VRO1+	NOT USED
ECH2	VRO1-	NOT USED	VRO1-	NOT USED
NOT USED	NOT USED	NOT USED	NOT USED	NOT USED
NOT USED	NOT USED	NOT USED	NOT USED	NOT USED

NOTE. * = EXISTING EQUIPMENT TO BE RELOCATED INTO NEW HOUSING BY CONSTRUCTION FORCES

NOTE.

1. [ ] = TAGGING PURPOSES ONLY.

NEW WORK

invensys Rail

PROJ #. IL2013014
DES BY. J. BRADY
CHK BY. D. ALBRIGHT
DATE. 05-15-13

= NOTE

CSX TRANSPORTATION

RAIL TRANSPORT GROUP ENGINEERING
COMMUNICATIONS AND SIGNALS

TR-176 (ST. MARIE) 152861W

GEO CIRCUITS
OLNEY, IL M.P. BC-217.68

DESIGNED	DIGITIZED	CHECKED	DATE
IRC/JWB	IRC/JWB	IRC/DBA	05-15-13

DESIGN DATE	REV. NO.	DRAWING	SHEET NO	FILE	SHEET
05-15-13	1	-----	-----	BC21768	C09

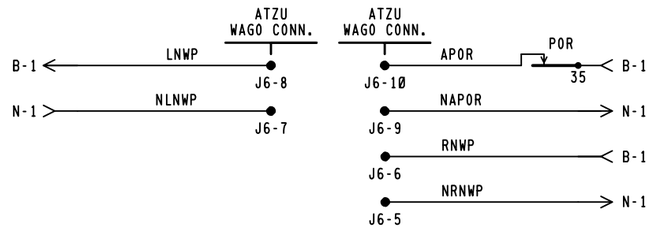

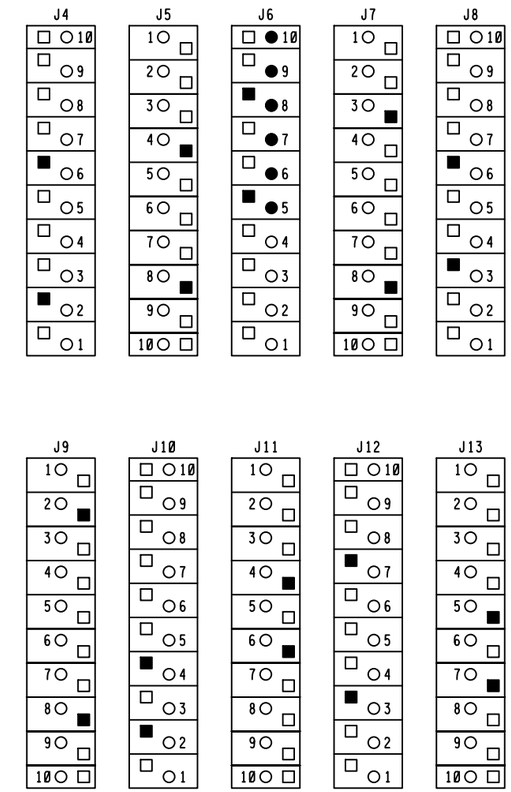

WAGOS
- ● - WIRED
- ○ - NOT WIRED

KEYING FINGERS
- ■ - CUT
- □ - NOT CUT

NEW WORK

invensys Rail

PROJ #: IL2013014
DES BY: J. BRADY
CHK BY: D. ALBRIGHT
DATE: 05-15-13

CSX TRANSPORTATION
RAIL TRANSPORT GROUP ENGINEERING
COMMUNICATIONS AND SIGNALS

TR-176 (ST. MARIE) 152861W

SEAR II CHANNELS
OLNEY, IL M.P. BC-217.68

DESIGNED	DIGITIZED	CHECKED	DATE
IRC/JWB	IRC/JWB	IRC/DBA	05-15-13

DESIGN DATE	REV. NO.	DRAWING	SHEET NO	FILE	SHEET
05-15-13	1	-----	-----	BC21768	C10