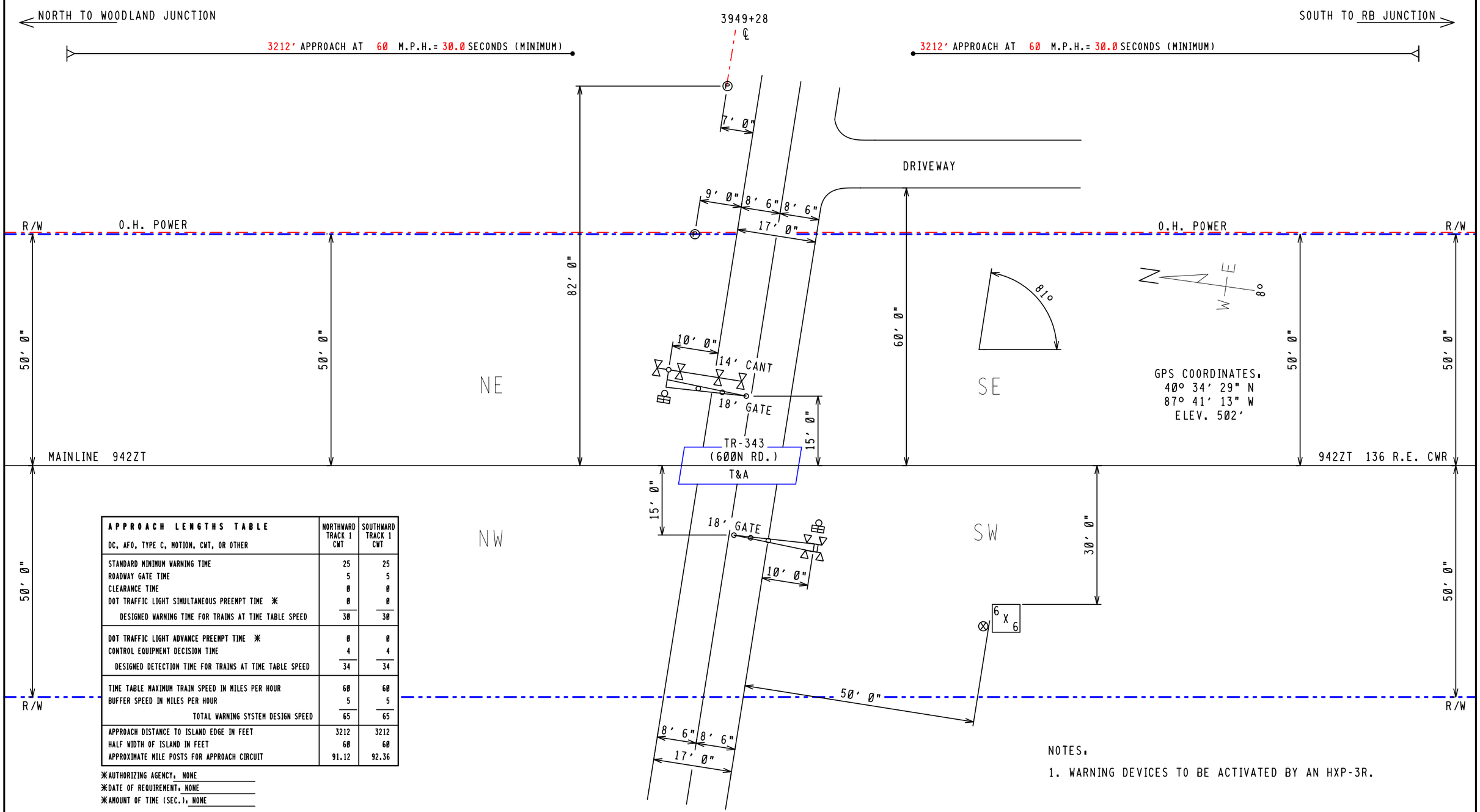

APPROACH LENGTHS TABLE DC, AFO, TYPE C, MOTION, CWT, OR OTHER	NORTHWARD TRACK 1 CWT	SOUTHWARD TRACK 1 CWT
STANDARD MINIMUM WARNING TIME	25	25
ROADWAY GATE TIME	5	5
CLEARANCE TIME	0	0
DOT TRAFFIC LIGHT SIMULTANEOUS PREEMPT TIME ✳	0	0
DESIGNED WARNING TIME FOR TRAINS AT TIME TABLE SPEED	30	30
DOT TRAFFIC LIGHT ADVANCE PREEMPT TIME ✳	0	0
CONTROL EQUIPMENT DECISION TIME	4	4
DESIGNED DETECTION TIME FOR TRAINS AT TIME TABLE SPEED	34	34
TIME TABLE MAXIMUM TRAIN SPEED IN MILES PER HOUR	60	60
BUFFER SPEED IN MILES PER HOUR	5	5
TOTAL WARNING SYSTEM DESIGN SPEED	65	65
APPROACH DISTANCE TO ISLAND EDGE IN FEET	3212	3212
HALF WIDTH OF ISLAND IN FEET	60	60
APPROXIMATE MILE POSTS FOR APPROACH CIRCUIT	91.12	92.36

✳AUTHORIZING AGENCY: NONE
✳DATE OF REQUIREMENT: NONE
✳AMOUNT OF TIME (SEC.): NONE

NOTES:

1. WARNING DEVICES TO BE ACTIVATED BY AN HXP-3R.

FILE NAME: 0ZA09174.H01	REVISION DATES	PRODUCED FOR:	PRODUCED BY:	LEGEND	GUARD RAIL	METER SERVICE ⊗	STREET NAME: TR-343 (600N RD.)
DATE DRAWN: 04/15/2013	04-26-2013	CSX TRANSPORTATION	invensys Rail	CSX ROW	O.H. POWER	POLE Ⓟ	CITY & STATE: WELLINGTON, IL
DRAWN BY: MILLER, ROBERT	- -	RAIL TRANSPORT GROUP ENGINEERING	7775 BAYMEADOWS WAY	R/R POLELINE	FENCE	FIRE PLUG Ⓕ	PROJECT #: IL2013011
CHECKED BY: WILTSIE, JOE	- -	COMMUNICATIONS AND SIGNALS	SUITE 250	GAS	WATER	SEWER CAP Ⓢ	OP #: IL0390
SSC #: JXXD03606	- -		JACKSONVILLE, FL 32256	FIBER OPTIC	SEWER	GAS VENT Ⓥ	DOT #: 353649L

PROPOSED CROSSING LAYOUT
1"=20'

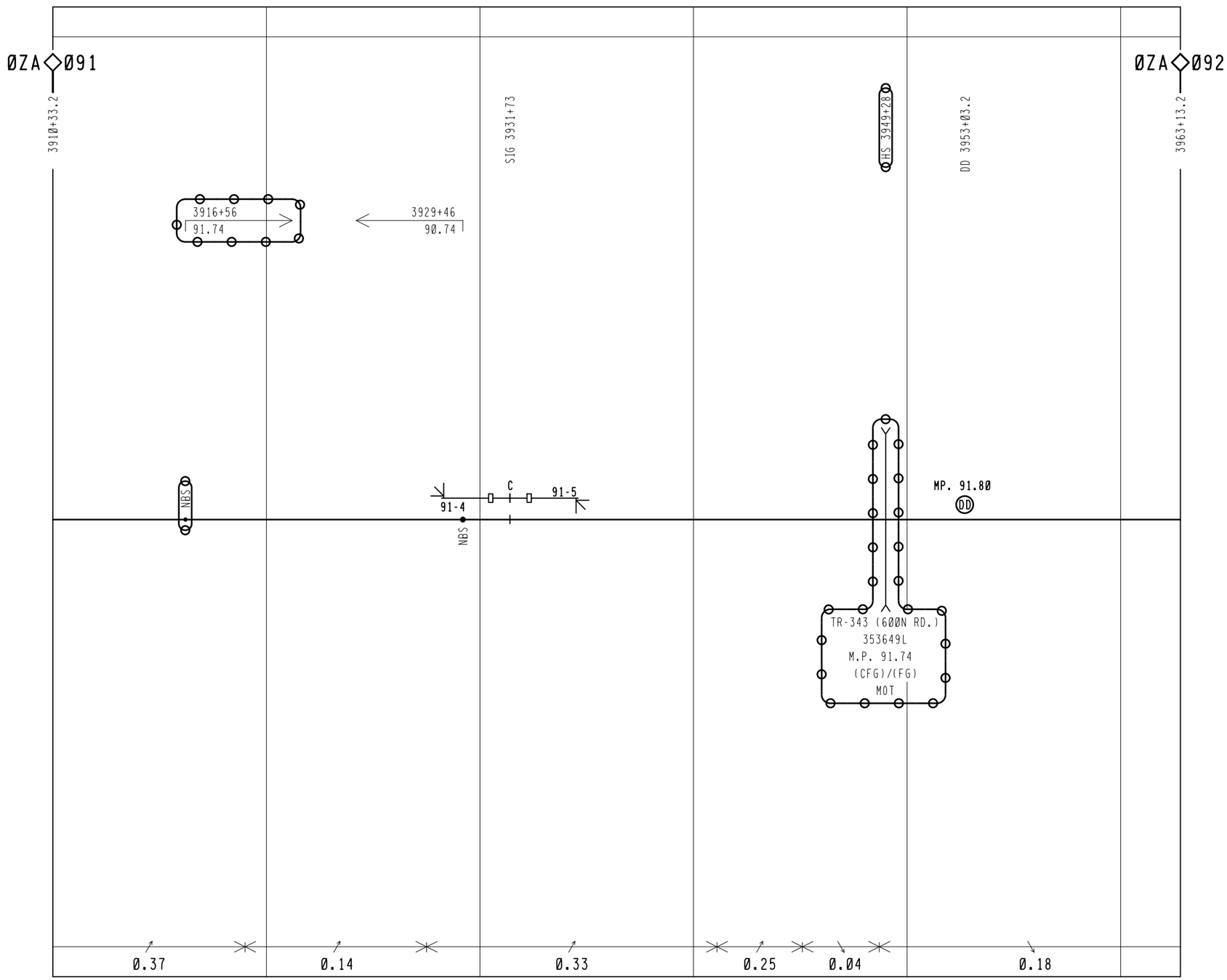

invensys
Rail

PROJ #: IL2013011
DES BY: J. WILTSIE
CHK BY: S. SPENCE
DATE: 04-26-13

= IN

REVISIONS					
12-17-96 HAR IL95019	03-28-2001 SWE IL1994039	05-18-07 IRS IL2006026	03-12-12 XRL IL2011019	06-08-12 XRL IL2011028A IL2011029A	

TRACK PLAN
HORIZONTAL SCALE:
1 INCH = 500 FEET

CSX TRANSPORTATION
RAIL TRANSPORT GROUP ENGINEERING
COMMUNICATIONS AND SIGNALS

DESIGNED	DIGITIZED	CHECKED	DATE	NEXT FILE	NEXT SH	FILE	SHEET
URS/MLW	URS/MLW	URS/CAM	09-12-94	0ZA09300	T01	0ZA09200	T01

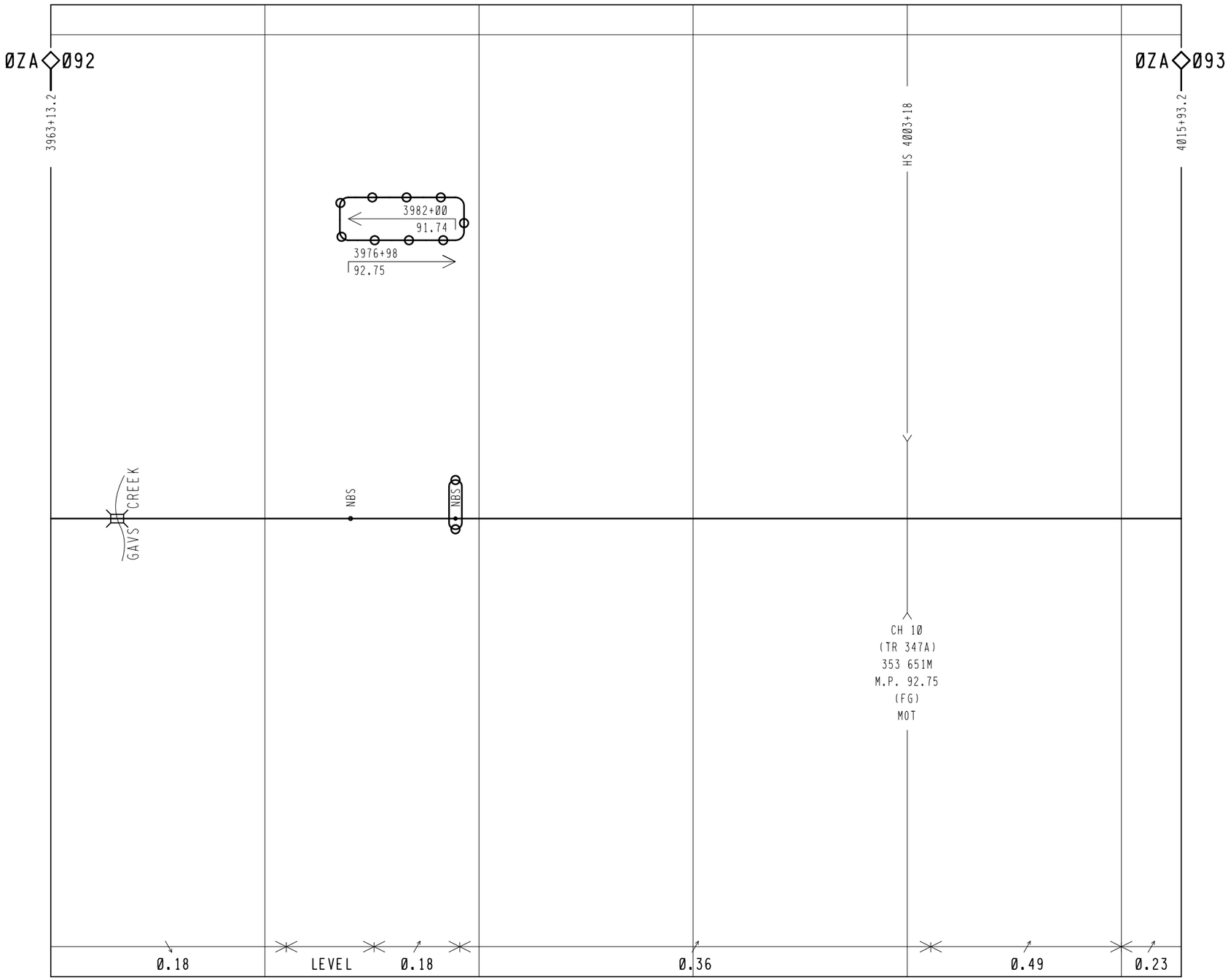

invensys
Rail

PROJ #: IL2Ø13Ø11
DES BY: J. WILTSIE
CHK BY: S. SPENCE
DATE: Ø4-26-13

⊖⊖⊖ = IN

REVISIONS	
05-12-03 GET IL2001040	
06-08-12 XRL IL2011028 IL2011029	

TRACK PLAN
HORIZONTAL SCALE:
1 INCH = 5ØØ FEET

CSX TRANSPORTATION
RAIL TRANSPORT GROUP ENGINEERING
COMMUNICATIONS AND SIGNALS

DESIGNED	DIGITIZED	CHECKED	DATE	NEXT FILE	NEXT SH	FILE	SHEET
URS/MLW	URS/MLW	URS/CAM	Ø9-12-94	ØZAØ94ØØ	TØ1	ØZAØ93ØØ	TØ1

INDEX

CONTENTS

SH. NO.		REVISION NO. 1	2	3	4	5	6	7	8	9
I01	TITLE, NOTES, INDEX & REVISIONS	☒	⊘							
S01	TRACK & SIGNAL PLAN	☒	⊘							
P01	ELECTROLOGIXS PROGRAM	☒								
G01	ELECTROLOGIXS I/O EQUIVALENT CIRCUITS	☒								
E01	POWER DISTRIBUTION	☒	⊘							
E02	ELECTROLOGIXS MODULE CONFIGURATION	☒								
C01	ELECTROLOGIXS CIRCUITS	☒								
C02	ELECTROLOGIXS TRACK CIRCUITS	☒								
C03	SIGNAL LIGHTING CIRCUITS	☒								
C04	CROSSING DETECTION CIRCUITRY		⧄							
C05	DETECTION DEVICE PROGRAM		⧄							
E03	POWER DISTRIBUTION		⧄							

⧄ = DESIGN COMPLETED

☒ = REVISION COMPLETED

REVISIONS

REV. NO.	PROJECT NO.	DESIGN DATE	IN SERVICE DATE	REVISION DATE
1	IL2011028A IL2011029A	01-03-12	05-08-12	06-08-12
2	IL2013011	04-26-13		

TO BE COMPLETED ON A.I.S.

invensys Rail

PROJ #: IL2013011
DES BY: J. WILTSIE
CHK BY: S. SPENCE
DATE: 04-26-13

= IN
= OUT
= NOTE

CSX TRANSPORTATION
RAIL TRANSPORT GROUP ENGINEERING
COMMUNICATIONS AND SIGNALS

SIGNALS 91-4/91-5

TITLE, NOTES, INDEX & REVISIONS
WELLINGTON, IL M.P. 0ZA-91.40

DESIGNED	DIGITIZED	CHECKED	DATE
XRL/CSW	XRL/CSW	XRL	01-03-12

DESIGN DATE	REV. NO.	DRAWING	SHEET NO	FILE	SHEET
01-03-12	1	-----	-----	0ZA09140	I01
04-26-13	2				

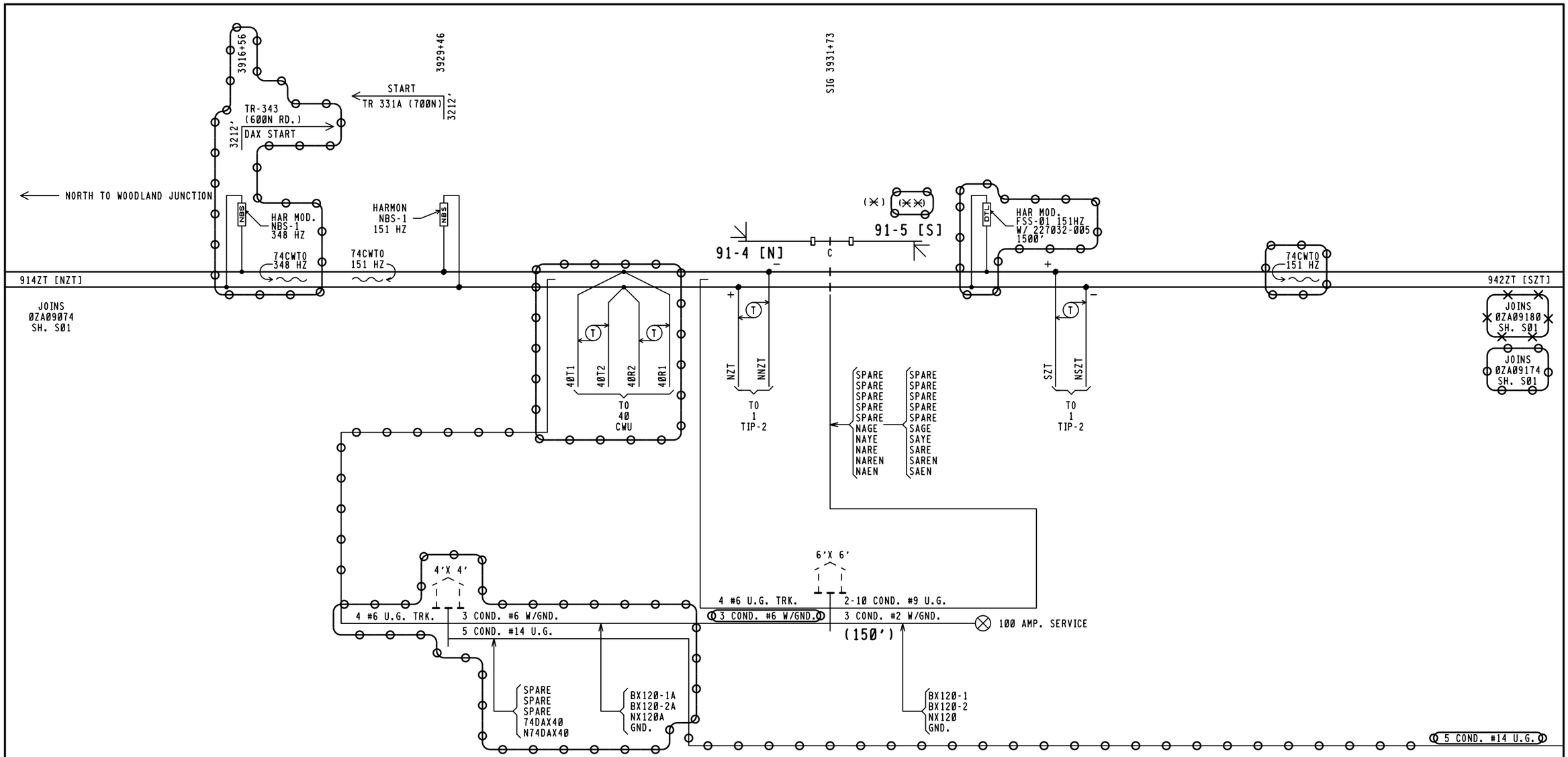

NOTES:

1. [ ] = TAGGING PURPOSES ONLY
2. (X) = LOCATION OF HOUSE
   (XX) = LOCATION OF REMOTE HOUSE
3. FLASHING ASPECTS ARE NOT SHOWN ON S01. SHOWN ONLY ON ASPECT CHART AND PROFILE.

invensys Rail

PROJ #: IL2013011
DES BY: J. WILTSIE
CHK BY: S. SPENCE
DATE: 04-26-13

= IN
= OUT

CSX TRANSPORTATION

RAIL TRANSPORT GROUP ENGINEERING
COMMUNICATIONS AND SIGNALS

SIGNALS 91-4/91-5

TRACK AND SIGNAL PLAN
WELLINGTON, IL M.P. 0ZA-91.40

DESIGNED	DIGITIZED	CHECKED	DATE
XRL/CSW	XRL/CSW	XRL	01-03-12

DESIGN DATE	REV. NO.	DRAWING	SHEET NO	FILE	SHEET
01-03-12	1	-----	-----	0ZA09140	S01
04-26-13	2				

TOP ROW

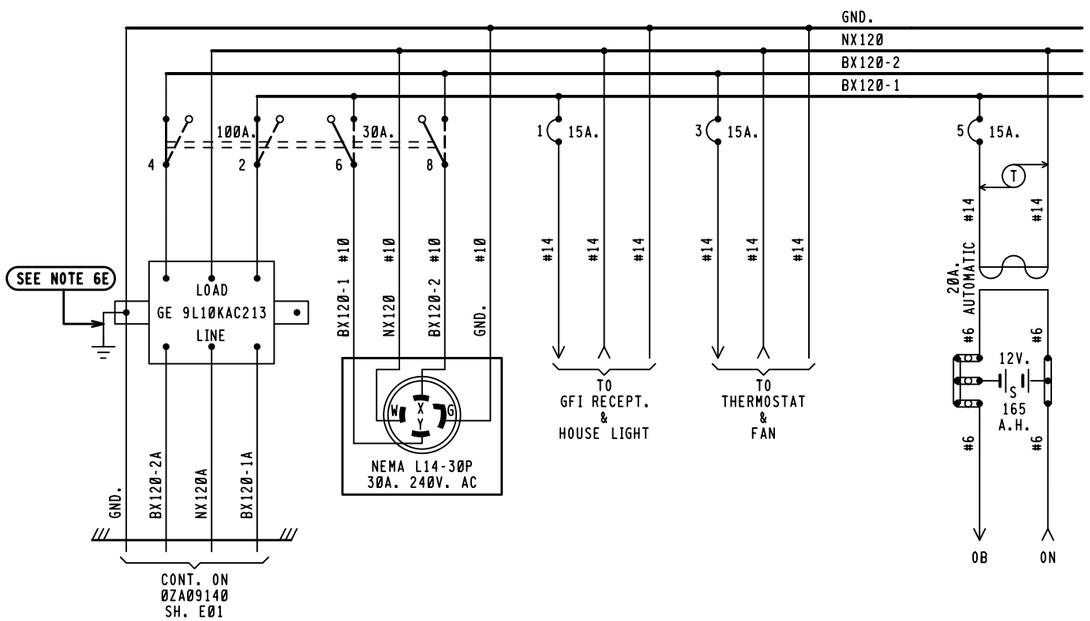

BX120-1	BX120-2
8.0 AMPS	2.0 AMPS

MAXIMUM LOAD
CALCULATED PER SS360

NOTES:

1 - REFERENCES ARE PER SCMS-13.
2 - ARRESTERS ARE PER SS382.
3 - SHELF RELAY PLACEMENT ON CONSIST CHART HAS NO SIGNIFICANCE.
4 - PLUG-IN RELAYS ARE VIEWED FROM THE FRONT OF RACK.
5 - BATTERY A.H. CAPACITY SHOWN IS THE MINIMUM REQUIREMENT.
6 - WIRING
  A - FEED TO ALL BUSSES, LIGHT CIRCUITS,MOTOR CIRCUITS TO BE #10 FLEX.
  B - 120-VOLT FEED FROM ENTRANCE TO POWER BUSS TO BE #10 FLEX.
  C - ALL TRACK WIRES TO BE #10 FLEX.
  D - ALL OTHERS TO BE #16 FLEX UNLESS NOTED.
  E - GROUND WIRE NOT NECESSARY WHEN GE ARRESTER IS MOUNTED ON GROUND PLANE OR METAL ENCLOSURE AFFIXED DIRECTLY TO BUNGALOW METALLIC STRUCTURAL MEMBER.
7 - CIRCUIT INTERRUPTERS 2 & 4 ARE MECHANICALLY INTERLOCKED WITH CIRCUIT INTERRUPTERS 6 & 8.

NEW WORK

invensys Rail

PROJ #: IL2013011
DES BY: J. WILTSIE
CHK BY: S. SPENCE
DATE: 04-26-13

= NOTE

1TRKHXP3R.E01
REV. 08-29-08

4'X 4' RELAY HOUSE W/FARADAY SHIELD

CSX TRANSPORTATION
RAIL TRANSPORT GROUP ENGINEERING
COMMUNICATIONS AND SIGNALS

SIGNALS 91-4/91-5

REMOTE HOUSE
POWER DISTRIBUTION
WELLINGTON, IL M.P. 0ZA-91.40

DESIGNED	DIGITIZED	CHECKED	DATE
IRC/JCW	IRC/JCW	IRC/SWS	04-26-13

DESIGN DATE	REV. NO.	DRAWING	SHEET NO	FILE	SHEET
04-26-13	2	-----	-----	0ZA09140	E03

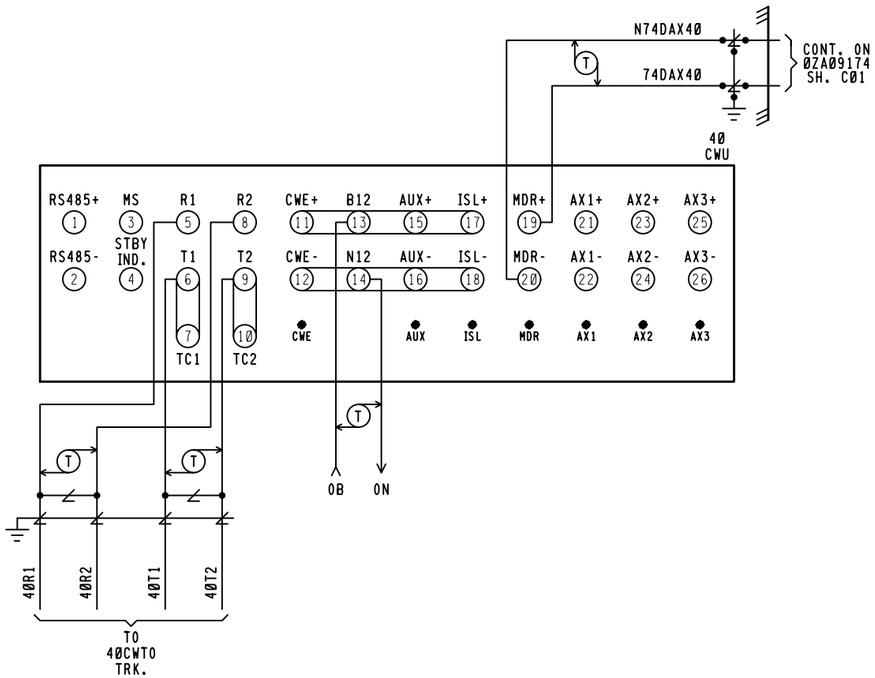

40CWU
HXP-3R MODULES REQUIRED

(NOT INSTALLED)
RMM MODULE (RECORDER MEMORY)
SIM MODULE (SERIAL INTERFACE)
SIM MODULE (SERIAL INTERFACE)
TRM MODULE (TRANSCEIVER)
TRM MODULE (TRANSCEIVER)
RSI MODULE (ISLAND) (NOT USED)
RSI MODULE (ISLAND) (NOT USED)
RYD MODULE (RELAY DRIVE)
RYD MODULE (RELAY DRIVE)
CPU MODULE (CENTRAL PROCESSOR UNIT)
CPU MODULE (CENTRAL PROCESSOR UNIT)
TLM MODULE (TRANSFER LOGIC)
(NOT INSTALLED) AXD MODULE
(NOT INSTALLED) AXD MODULE

FRONT VIEW

40
CWU

CABINET SWITCHES

THESE SWITCHES ARE LOCATED ON MOTHERBOARD

MASTER/SLAVE

MASTER SLAVE

S1

SYSTEM CONFIGURATION				
S6 & S7 DIP SWITCH POSITIONS				
SWITCH	1	2	3	4
SWITCH POSITION	ON	OFF	OFF	OFF
APPROACH.	NORMAL		(NOT USED)	

FREQUENCY SELECT						
NORMAL	S2 & S3 DIP SWITCH POSITIONS 348 HZ					
	SWITCH	1	2	3	4	5
	SWITCH POSITION	ON	ON	OFF	ON	OFF
STANDBY	S4 & S5 DIP SWITCH POSITIONS 348 HZ					
	SWITCH	1	2	3	4	5
	SWITCH POSITION	ON	ON	OFF	ON	OFF

TLM MODULE
JUMPERS AND SWITCHES

(TOGGLE MODE)
STANDBY ONLY — W1 — 3 2 1 (✱)

(DISABLE MODE)
ISL 1 DISABLE — W2 — 3 2 1 (✱)

NOTE.
PIN 1 IS IDENTIFIED BY ASTERICK BELOW IT.
(☆) = MAY BE SET PER FIELD CONDITIONS.

MINUTE TIMEOUT SWITCH

SETTING (☆) 9 MINUTES S1

S2 — STANDBY / AUTO / NORMAL

NEW WORK

invensys Rail

PROJ #. IL2013011
DES BY. J. WILTSIE
CHK BY. S. SPENCE
DATE. 04-26-13

CSX TRANSPORTATION
RAIL TRANSPORT GROUP ENGINEERING
COMMUNICATIONS AND SIGNALS

SIGNALS 91-4/91-5

REMOTE HOUSE
CROSSING DETECTION CIRCUITRY
WELLINGTON, IL M.P. 0ZA-91.40

1TRKHXP3R.C01
REV. 08-31-09

DESIGNED	DIGITIZED	CHECKED	DATE
IRC/JCW	IRC/JCW	IRC/SWS	04-26-13

DESIGN DATE	REV. NO.	DRAWING	SHEET NO	FILE	SHEET
04-26-13	2	-----	-----	0ZA09140	C04

40CWU

HXP-3R APPLICATION DESIGN CARD

OPTION 90 (CABINET #)	CABINET #

PASSWORD(_ _✳_ _)(SEE MANUAL 100052-001 AA0 1-27	TRACK 1	TRACK 2	DEFAULT
APPROACH LENGTH ADJUSTMENT	1526'	N/A	9,999 FT.
WARNING TIME ADJUSTMENT	30 SEC.	N/A	99 SEC.
LUMPED IMPEDANCE ADJUSTMENT (LIA)	✳	N/A	0
TRANSMITTER CHECK ADJUSTMENT (TC)	✳	N/A	0
MOTION DETECT RESTART (MD RESTART)	0 ☆	N/A	99%
OPTION 1 TRACK ENABLE (TK-ENA)	UP	N/A	UP (ALWAYS ENABLED)
OPTION 2 TRACK FREQUENCY (TK F0)	STRAP ◇	N/A	0 HZ
OPTION 3 CONSTANT WARNING/MOTION (CW/MD)	C	N/A	d (Motion)
OPTION 4 UNI/BIDIRECTIONAL (UNI-BI)	u	N/A	b (bi)
OPTION 5 NARROW BAND COMPENSATION (NBS-C)	⊗	N/A	9,999 FT.
OPTION 6 CWE WARNING TIME (CWEWT)	80 SEC.	N/A	80 SEC.
OPTION 7 LOSS OF SHUNT TIME (LOS)	16 SEC.	N/A	16 SEC.
OPTION 8 LOS W/JOINTS NEAR ISLAND (IJ-LOS)	5 SEC. ✳✳	N/A	5 SEC.
OPTION 9 BALLAST COMPENSATION (BC)	✳	N/A	FREQUENCY DEPENDANT ◎
OPTION 10 PHASE COMPENSATION ADJUSTMENT (P-COMP)	~~✳✳✳~~	N/A	0°

	AX OPTIONS △	OPTION 11 AX DRIVE #1	OPTION 12 AX DRIVE #2	OPTION 13 AX DRIVE #3	DEFAULT
ITEM 1	TRACK ASSIGNMENT (TK-ASN)	N/A	N/A	N/A	1
ITEM 2	OFFSET DISTANCE TRACK 1 (OF-TK1)	0000'	0000'	0000'	0 FT.
ITEM 3	OFFSET DISTANCE TRACK 2 (OF-TK2)	N/A	N/A	N/A	N/A
ITEM 4	WARNING TIME (WT)	99 SEC.	99 SEC.	99 SEC.	99 SEC.
ITEM 5	MOTION DETECT RESTART (MD-RST)	0 %	99 %	99 %	99 %
ITEM 6	CONSTANT WARNING/MOTION (CW/MD)	d	d	d	d (Motion)
ITEM 7	CLEAR JOINTS LOS (CJ-LOS)	00 SEC.	00 SEC.	00 SEC.	0 SEC.
ITEM 8	POST JOINT DETECTION (PJ-DET)	15 SEC.	15 SEC.	15 SEC.	15 SEC.
ITEM 9	POST JOINT RX (PJ-RX)	15	15	15	15
ITEM 10	POSITIVE START	dn	dn	dn	dn

OPTION 17 MDR DRIVE OR AX RELAY DRIVE SELECTION (MDR-AX)	◎	N/A	dn (STATUS ONLY) ◎

	OPTION 17 SUB-MENU	TRACK 1	TRACK 2	DEFAULT
ITEM 1	MDR-AX OFFSET DISTANCE TRK. 1(OF-TK1) & TRK. 2(OF-TK2)	1686'	N/A	0 FT.= CONFIGURED AS MDR
ITEM 2	MDR-AX CLEAR JOINT LOS TIME (CJ-LOS)	00 SEC.	N/A	0 SEC.
ITEM 3	MDR-AX POST JOINT DETECTION TIME (PJ-DET)	15 SEC.	N/A	15 SEC.
ITEM 4	POST JOINT RX (PJ-RX)	15	N/A	15 (0 = DISABLE)
OPTION 18	MOTION DETECTOR TIMER (MD-TMR)	10 MIN.	N/A	10 MIN. (0 = DISABLE)
OPTION 19	MINIMUM WARNING TIME WITH ADVANCED PREEMPTION (MIN-WT)	00 SEC.	N/A	00 SEC. (0 = DISABLE)
	OPTION 20 FALSE SHUNT TIMER ADJUSTMENT (FS-TMR)			
ITEM 1	FALSE SHUNT RX (FS-RX)	0	N/A	0, 0 = DISABLE
ITEM 2	FALSE SHUNT TIMER ADJUSTMENT (FS-TM)	10	N/A	10
	OPTION 21 POSITIVE START RX & TIMER ADJUSTMENT (POS-ST)			
ITEM 1	POSITIVE START RX (POS-RX)	0	N/A	0, 0 = DISABLE
ITEM 2	POSITIVE START TIMER (POS-TM)	10	N/A	10
	OPTION 22 APPROACH RELEASE RX (AR-TM)			
ITEM 1	APPROACH RELEASE RX (AR-RX)	0	N/A	0, 0 = DISABLE
ITEM 2	APPROACH RELEASE TIMER (AR-TM)	10	N/A	10
OPTION 47	AUTO RX ADJUSTMENT (ATO-RX)	dn	N/A	dn = DISABLE
OPTION 48	PREDICTIVE FILTER ENABLE/DISABLE (PF-ENA)	dn	N/A	dn = DISABLE
OPTION 49	RESET LOCAL PARAMETERS TO DEFAULT SETTINGS (RESET)			PAGE 3-14 & 3-41
OPTION 50	RECORDER PRINTER CONTROL (PRNTR)	⊕		PAGE 1-47 & 3-41
OPTION 51	CLOCK ADJUSTMENT (CLOCK)	⊕		PAGE 3-32
	OPTION 70 LOCAL SERIAL I/O PORT ADJUSTMENT (LSP)			
ITEM 1	BAUD RATE	38.4	⊕	PAGE 1-47 & 3-42
ITEM 2	DBITS (DATA BITS)	8	⊕	PAGE 1-47 & 3-42
ITEM 3	PA (PARITY)	NO(-=NO PARITY)	⊕	PAGE 1-47 & 3-42
OPTION 90	CABINET NUMBER DISPLAY (CAB)	✳		PAGE 1-47 & 3-41
OPTION 91	HXP-3 OPERATING PROGRAM VERSION NUMBER (VERS)	✳		VERSION 35.0
OPTION 99	RESET PASSWORD TIMER (TIMER)	⊕		PAGE 3-30

NOTE:

✳ = ENTRY TO BE DONE ON AS-IN-SERVICE.

☆ = NORMALLY SET AT "0" SEE MANUAL 100052-001 AA0 PG. 1-46 & 3-41.

◇ = THE WORD STRAP IS DISPLAYED WHEN FREQUENCY SELECT DIP SWITCHES USED TO SELECT A STANDARD FREQUENCY.

⊗ = ADJUSTMENT NECESSARY ONLY WHEN AX RELAY DRIVE MODULE USED.

✳✳ = ADJUSTMENT NECESSARY IF INSULATED JOINTS ARE LOCATED NEAR ISLAND CIRCUIT.

~~✳✳✳~~ = ADJUSTMENT NECESSARY ONLY IF VERY POOR BALLAST CONDITIONS NEED TO BE COMPENSATED.

◎ = OPTION 17 SUB-MENU USED ONLY WHEN AX RELAY DRIVE OPERATION IS SELECTED. ENTERING AN OFFSET DISTANCE VALUE OTHER THAN ZERO ASSIGNS A MDR AS AN AX DRIVE.

△ 1. WHEN AXD MODULES ARE NOT INSTALLED, THEIR ASSOCIATED OPTIONS AND ADJUSTMENTS ARE NOT DISPLAYED.
2. PROGRAM UNUSED AX OPTION(S) SAME AS OPTION 11. IF AX OPTION 12 OR 13 IS USED IN FUTURE THEN REPROGRAM AS APPLICABLE.

◎ = FREQUENCY DEPENDANT, RANGE BETWEEN 50-250 TO BE SUPPLIED ON AS-IN-SERVICE.

⊕ = OPTIONS 50-99 ARE NON-VITAL AND NOT REQUIRED FOR INITIAL SETUP. SEE MANUAL 100052-001 AA0. FOR OPTIONS 49 TO 99 SEE PAGES AS LISTED IN DEFAULT COLUMN.

⊕ = SET CORRECT LOCAL TIME AND DATE. TIME OF DAY SHOULD BE SYNCRONIZED WITH TIME SHOWN BY EXTERNAL EVENT RECORDER.

NEW WORK

invensys Rail

PROJ #: IL2013011
DES BY: J. WILTSIE
CHK BY: S. SPENCE
DATE: 04-26-13

CSX TRANSPORTATION
RAIL TRANSPORT GROUP ENGINEERING
COMMUNICATIONS AND SIGNALS

SIGNALS 91-4/91-5

REMOTE HOUSE
DETECTION DEVICE PROGRAM
WELLINGTON, IL M.P. 0ZA-91.40

1TRKHXP3R.C02
REV. 10-31-07

DESIGNED	DIGITIZED	CHECKED	DATE
IRC/JCW	IRC/JCW	IRC/SWS	04-26-13

DESIGN DATE	REV. NO.	DRAWING	SHEET NO	FILE	SHEET
04-26-13	2	-----	-----	0ZA09140	C05

(TOP ROW)

NVSTOP			SVSTOP		
12	FB	B77	12	FB	B77
15	F	C30	15	F	C30
22			22		
25			25		
32	F		32	F	
35	F		35	F	

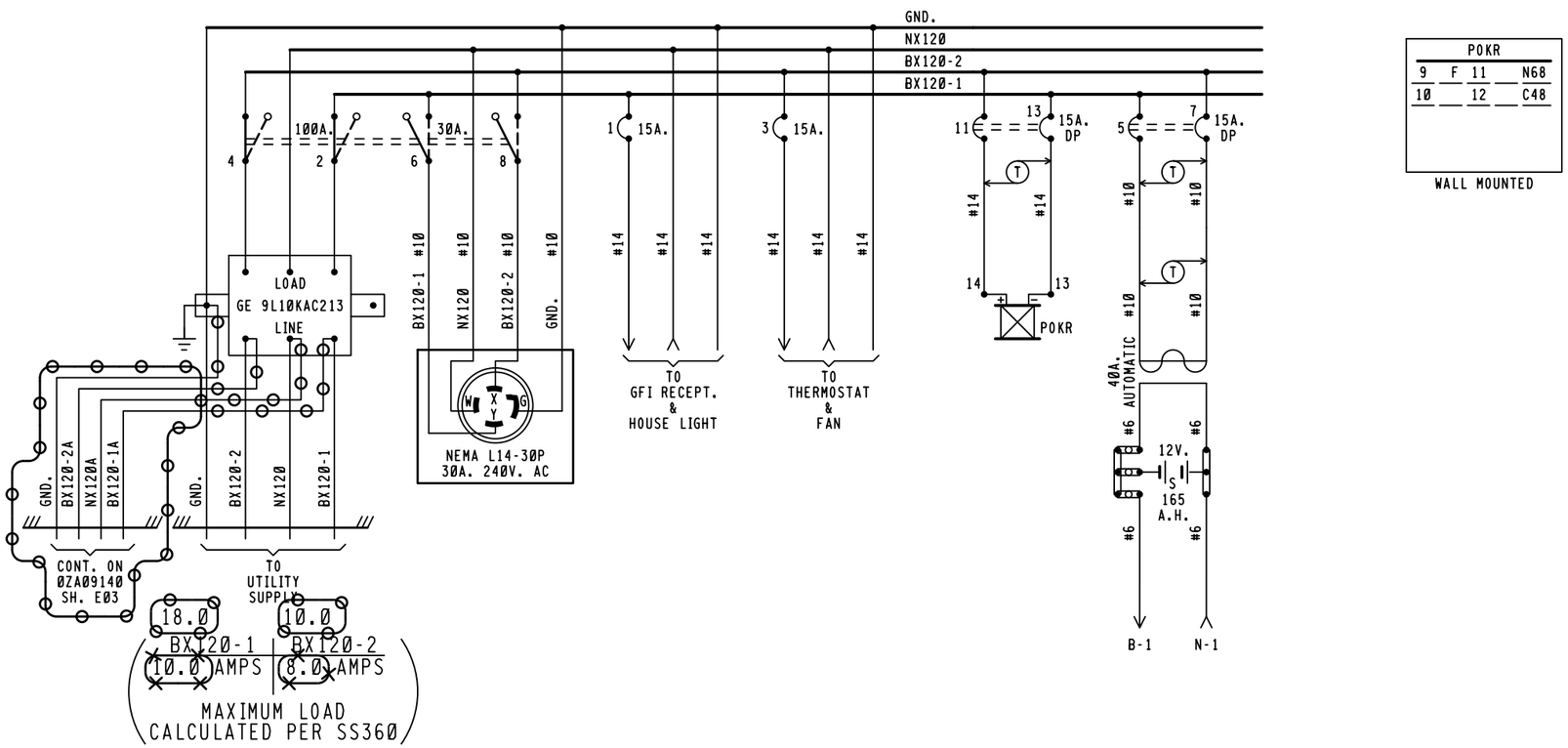

POKR			
9	F	11	N68
10		12	C48

WALL MOUNTED

NOTES:

1 - REFERENCES ARE PER SCMS-13.
2 - ARRESTERS ARE PER SS382.
3 - SHELF RELAY PLACEMENT ON CONSIST CHART HAS NO SIGNIFICANCE.
4 - PLUG-IN RELAYS ARE VIEWED FROM THE FRONT OF RACK.
5 - BATTERY A.H. CAPACITY SHOWN IS THE MINIMUM REQUIREMENT.
6 - WIRING
  A - FEED TO ALL BUSSES, LIGHT CIRCUITS,MOTOR CIRCUITS TO BE #10 FLEX.
  B - 120-VOLT FEED FROM ENTRANCE TO POWER BUSS TO BE #10 FLEX.
  C - ALL TRACK WIRES TO BE #10 FLEX.
  D - ALL OTHERS TO BE #16 FLEX UNLESS NOTED.
  E - ALL BATTERY OUTPUTS TO BE #6 PER SS360.
  F - GROUND WIRE NOT NECESSARY WHEN GE ARRESTER IS MOUNTED ON GROUND PLANE OR METAL ENCLOSURE AFFIXED DIRECTLY TO BUNGALOW METALLIC STRUCTURAL MEMBER.
7 - CIRCUIT INTERRUPTERS 2 & 4 ARE MECHANICALLY INTERLOCKED WITH CIRCUIT INTERRUPTERS 6 & 8.
8 - SET INPUT VOLTAGE SELECTOR SWITCH, OR JUMPER TAP SETTING FOR 230 VAC.

invensys Rail

PROJ #: IL2013011
DES BY: J. WILTSIE
CHK BY: S. SPENCE
DATE: 04-26-13

~~OOO~~ = IN
~~XXX~~ = OUT

6'X 6' RELAY HOUSE

CSX TRANSPORTATION
RAIL TRANSPORT GROUP ENGINEERING
COMMUNICATIONS AND SIGNALS

SIGNALS 91-4/91-5

POWER DISTRIBUTION
WELLINGTON, IL M.P. 0ZA-91.40

DESIGNED	DIGITIZED	CHECKED	DATE
XRL/CSW	XRL/CSW	XRL	01-03-12

DESIGN DATE	REV. NO.	DRAWING	SHEET NO	FILE	SHEET
01-03-12	1	-----	-----	0ZA09140	E01
04-26-13	2				

INDEX

CONTENTS

SH. NO.		REVISION NO. 1	2	3	4	5	6	7	8	9
I01	TITLE, NOTES, INDEX, AND REVISIONS	X	X	⊘						
S01	SITE LAYOUT	X	X	⊘						
G01	POWER DISTRIBUTION	X	X							
G02	POWER SUBSYSTEM	X	X							
G03	ENCLOSURE	X	X							
G04	INTERCONNECT BOARD	X	X							
G05	SURGE PANEL DETAIL	X	X							
G06	TRACK LAYOUT	X	X							
G07	DRAGGER WOOD TIE APPLICATION	X	X							
G08	HOUSE LAYOUT	X	X							
G09	SYSTEM PARAMETERS	X	X							
G10	DEFECT / HIGH LOAD DETECTOR	X	X							

⊘ = DESIGN COMPLETED

X = REVISION COMPLETED

REVISIONS

REV. NO.	PROJECT NO.	DESIGN DATE	IN SERVICE DATE	REVISION DATE
1	IL2006026	05-15-06	10-26-06	05-18-07
2	IL2011017	05-09-11	05-08-12	06-08-12
3	IL2013011	04-26-13		

TO BE COMPLETED ON A.I.S.

invensys Rail

PROJ #: IL2013011
DES BY: J. WILTSIE
CHK BY: S. SPENCE
DATE: 04-26-13

~~000~~ = IN
~~XXX~~ = OUT
⬭ = NOTE

CSX TRANSPORTATION

RAIL TRANSPORT GROUP ENGINEERING
COMMUNICATIONS AND SIGNALS

DEFECT DETECTOR

TITLE, NOTES, INDEX, AND REVISIONS
WELLINGTON, IL M.P. 0ZA-091.80

DESIGNED	DIGITIZED	CHECKED	DATE
IRS/JLM	IRS/JLM	IRS/RAB	05-15-06

DESIGN DATE	REV. NO.	DRAWING	SHEET NO	FILE	SHEET
X 05-09-11 X	X 2 X	-------	----	0ZA09180	I01
04-26-13	3				

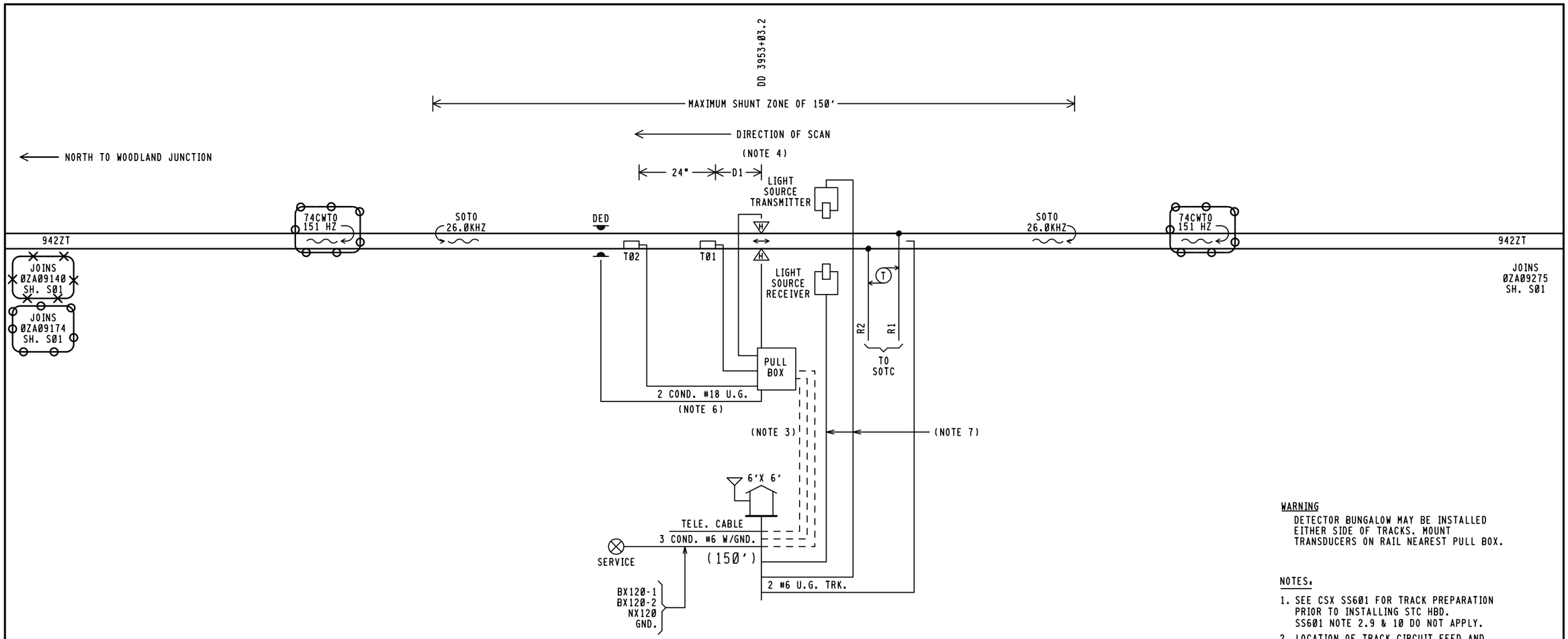

WARNING

DETECTOR BUNGALOW MAY BE INSTALLED EITHER SIDE OF TRACKS. MOUNT TRANSDUCERS ON RAIL NEAREST PULL BOX.

NOTES:

1. SEE CSX SS601 FOR TRACK PREPARATION PRIOR TO INSTALLING STC HBD. SS601 NOTE 2.9 & 10 DO NOT APPLY.
2. LOCATION OF TRACK CIRCUIT FEED AND DRAGGING EQUIPMENT DETECTOR SHOULD BE IN THE VICINITY OF TRANSDUCERS.
3. — — -= 2" ELECTRICAL PIPE BEWTEEN PULL BOX & SIGNAL HOUSE.
4. SCANNERS SHOULD BE INSTALLED WITH DIRECTION OF SCAN BEING MAGNETIC NORTH OR EAST.
5. AREA AROUND PULL BOX MUST BE WELL DRAINED. EXCAVATE AREA & BACKFILL WITH CRUSHED STONE UNDER & AROUND PULL BOX. TOP OF PULL BOX AT GRADE LEVEL.
6. DED CABLE IN FLEX CONDUIT TO PULL BOX.
7. 4 COND. #16 RECEIVER / 3 COND. #16 TRANSMITTER IN 2" ELECTRICAL PIPE.

TRANSDUCER SPACING			
D1	115 LB RAIL	132 LB RAIL	136 LB RAIL
	10 13/16"	11 5/16"	11 3/8"

NOTE: D1 IS MEASURED FROM THE TRAILING EDGE OF THE MOUNTING CLAMP

invensys Rail

PROJ #: IL2013011
DES BY: J. WILTSIE
CHK BY: S. SPENCE
DATE: 04-26-13

⊖⊖⊖ = IN
⊗⊗⊗ = OUT

CSX TRANSPORTATION
RAIL TRANSPORT GROUP ENGINEERING
COMMUNICATIONS AND SIGNALS

DEFECT DETECTOR

SITE LAYOUT
WELLINGTON, IL M.P. 0ZA-091.80

DESIGNED	DIGITIZED	CHECKED	DATE
IRS/JLM	IRS/JLM	IRS/RAB	05-15-06

DESIGN DATE	REV. NO.	DRAWING	SHEET NO	FILE	SHEET
05-09-11	2	-------	----	0ZA09180	S01
04-26-13	3				

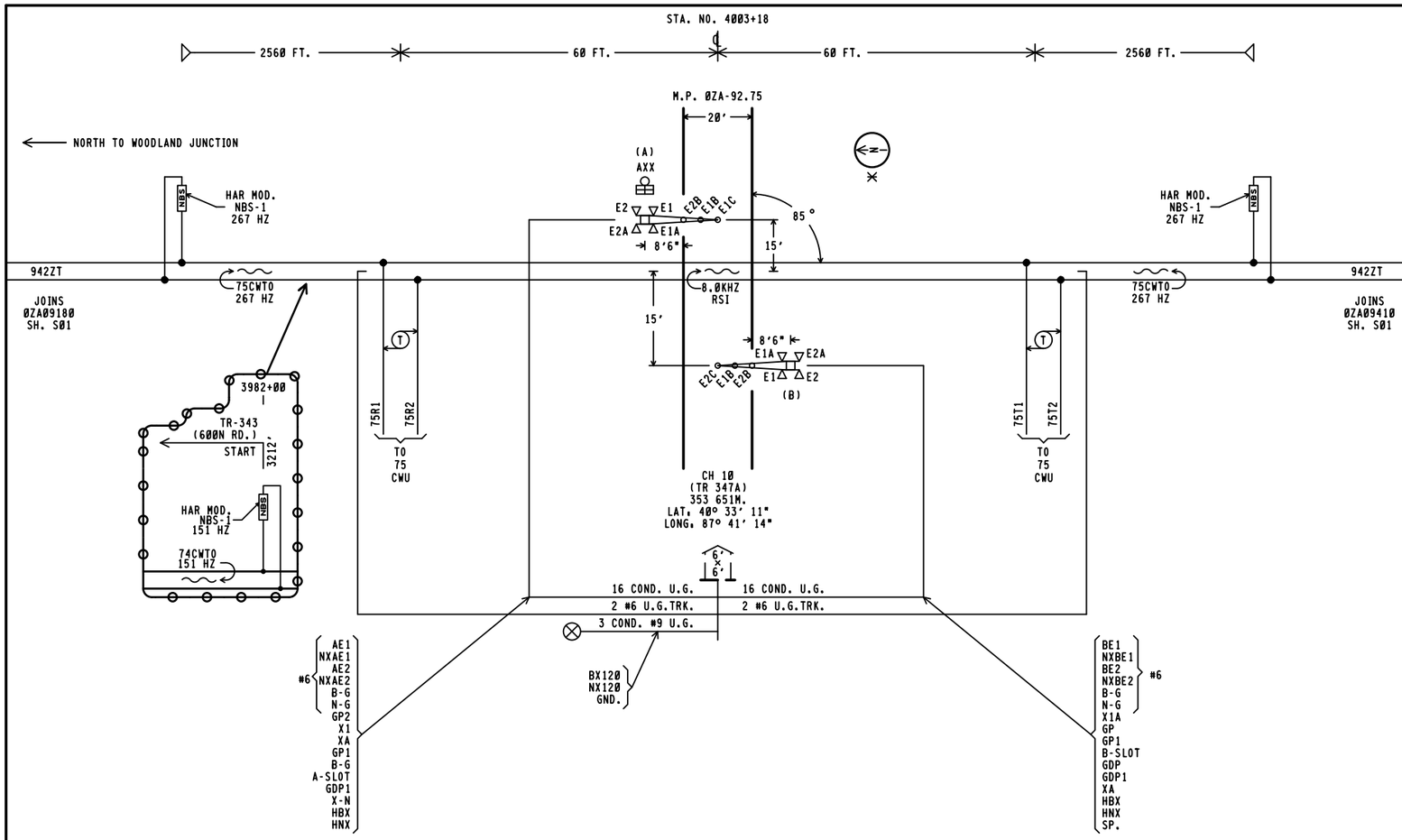

APROACH LENGTHS TABLE DC, AFO, TYPE C, MOTION, CWT, OR OTHER	NORTHWARD TRACK 1 MOT	SOUTHWARD TRACK 1 MOT
STANDARD MINIMUM WARNING TIME	20	20
ROADWAY GATE TIME	5	5
CLEARANCE TIME	0	0
DOT TRAFFIC LIGHT SIMULTANEOUS PREEMPT TIME ✳	0	0
DESIGNED WARNING TIME FOR TRAINS AT TIME TABLE SPEED	25	25
DOT TRAFFIC LIGHT ADVANCE PREEMPT TIME ✳	0	0
CONTROL EQUIPMENT DECISION TIME	2	2
DESIGNED DETECTION TIME FOR TRAINS AT TIME TABLE SPEED	27	27
TIME TABLE MAXIMUM TRAIN SPEED IN MILES PER HOUR	60	60
BUFFER SPEED IN MILES PER HOUR	5	5
TOTAL WARNING SYSTEM DESIGN SPEED	65	65
APPROACH DISTANCE TO ISLAND EDGE IN FEET	2560'	2560'
HALF WIDTH OF ISLAND IN FEET	60'	60'
APPROXIMATE MILE POSTS FOR APPROACH CIRCUIT	93.25	92.26

✳AUTHORIZING AGENCY, "NONE" IF NOT USED
✳DATE OF REQUIREMENT, "NONE" IF NOT USED
✳AMOUNT OF TIME (SEC.), "NONE" IF NOT USED

NOTE:
1. 20 WATT BULBS ON GATE ARMS. ALL OTHERS TO BE 25 WATT BULBS.
2. GATE LENGTH (A) 18' (B) 18'
3. ✳ = LOCATION OF HOUSE
4. (N) = APPROXIMATE COMPASS NORTH.
5. THE TRANSMITTER LEADS FOR MOTION OR PREDICTOR EQUIPMENT SHOULD BE CONNECTED ON THE BUNGALOW OR SHORT LEAD SIDE OF THE CROSSING.
6. ISLAND TRACK LEADS SHOULD BE CONNECTED 50 FEET FROM ROAD EDGE BUT ON NARROW ROADS (20' OR LESS) ISLAND LENGTH SHALL BE 120 FEET.
7. WARNING SYSTEM APPROACH CIRCUIT DISTANCES ARE TO BE MEASURED FROM THE ISLAND TRACK CONNECTIONS.

REVISIONS

05-12-03 GET IL2001040	
09-21-06 CSX SY2001017	
06-08-12 XRL	IL2011017

invensys Rail

PROJ #. IL2013011
DES BY. J. WILTSIE
CHK BY. S. SPENCE
DATE. 04-26-13

⊖⊖⊖ = IN

CSX TRANSPORTATION
RAIL TRANSPORT GROUP ENGINEERING
COMMUNICATIONS AND SIGNALS

CH 10 (TR 347A) 353651M

TRACK AND SIGNAL PLAN
WELLINGTON, IL M.P. 0ZA-92.75

DESIGNED	DIGITIZED	CHECKED	DATE
HAR/WPB	HAR/CSM	HAR/FAP	01-03-02

DRAWING	SHEET NO	NEXT SH	NEXT FILE	NEXT SH	FILE	SHEET
-----	-----	-----	0ZA09275	E01	0ZA09275	S01

INDEX

CONTENTS

SH. NO.		REVISION NO. 1	2	3	4	5	6	7	8	9
I01	INDEX AND REVISIONS	╱								
S01	TRACK AND SIGNAL PLAN	╱								
E01	POWER DISTRIBUTION	╱								
C01	CROSSING DETECTION CIRCUITRY	╱								
C02	DETECTION DEVICE PROGRAM	╱								
C03	CROSSING WARNING DEVICE GATE CIRCUITRY	╱								
C04	CROSSING WARNING DEVICE LIGHT CIRCUITRY	╱								
C05	RECORDER CIRCUITS	╱								
C06	RECORDER PROGRAM	╱								

╱ = DESIGN COMPLETED

╳ = REVISION COMPLETED

REVISIONS

REV. NO.	PROJECT NO.	DESIGN DATE	IN SERVICE DATE	REVISION DATE
1	IL2013011	04-26-13		

TO BE COMPLETED ON A.I.S.

NEW WORK

invensys Rail

PROJ #. IL2013011
DES BY. J. WILTSIE
CHK BY. S. SPENCE
DATE. 04-26-13

= NOTE

1TRKHXP3R.I01
REV. 02-17-06

CSX TRANSPORTATION
RAIL TRANSPORT GROUP ENGINEERING
COMMUNICATIONS AND SIGNALS

TR-343 (600N RD.) 353649L

INDEX AND REVISIONS
WELLINGTON, IL M.P. 0ZA-91.74

DESIGNED	DIGITIZED	CHECKED	DATE
IRC/JCW	IRC/JCW	IRC/SWS	04-26-13

DESIGN DATE	REV. NO.	DRAWING	SHEET NO	FILE	SHEET
04-26-13	1	-----	-----	0ZA09174	I01

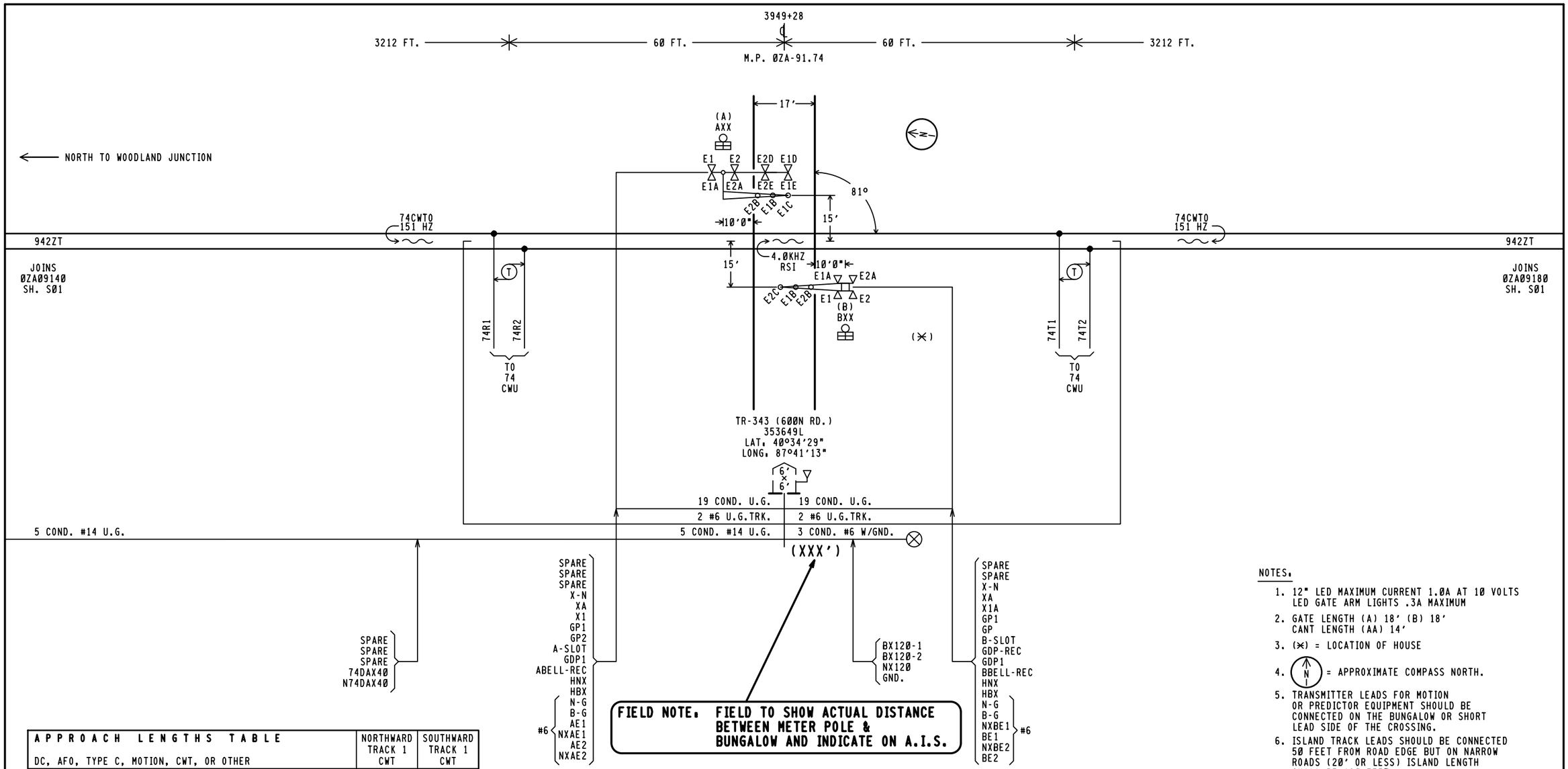

FIELD NOTE. FIELD TO SHOW ACTUAL DISTANCE BETWEEN METER POLE & BUNGALOW AND INDICATE ON A.I.S.

NOTES.

1. 12" LED MAXIMUM CURRENT 1.0A AT 10 VOLTS LED GATE ARM LIGHTS .3A MAXIMUM
2. GATE LENGTH (A) 18' (B) 18' CANT LENGTH (AA) 14'
3. (✳) = LOCATION OF HOUSE
4. (N) = APPROXIMATE COMPASS NORTH.
5. TRANSMITTER LEADS FOR MOTION OR PREDICTOR EQUIPMENT SHOULD BE CONNECTED ON THE BUNGALOW OR SHORT LEAD SIDE OF THE CROSSING.
6. ISLAND TRACK LEADS SHOULD BE CONNECTED 50 FEET FROM ROAD EDGE BUT ON NARROW ROADS (20' OR LESS) ISLAND LENGTH SHALL BE 120 FEET.
7. WARNING SYSTEM APPROACH CIRCUIT DISTANCES ARE TO BE MEASURED FROM THE ISLAND TRACK CONNECTIONS.

APPROACH LENGTHS TABLE DC, AFO, TYPE C, MOTION, CWT, OR OTHER	NORTHWARD TRACK 1 CWT	SOUTHWARD TRACK 1 CWT
STANDARD MINIMUM WARNING TIME IN SECONDS	25	25
ROADWAY GATE TIME IN SECONDS	5	5
CLEARANCE TIME IN SECONDS	0	0
DOT TRAFFIC LIGHT SIMULTANEOUS PREEMPT TIME IN SECONDS✳	0	0
DESIGNED WARNING TIME FOR TRAINS AT TIME TABLE SPEED	30 SEC.	30 SEC.
DOT TRAFFIC LIGHT ADVANCE PREEMPT TIME IN SECONDS ✳	0	0
CONTROL EQUIPMENT DECISION TIME IN SECONDS	4	4
DESIGNED DETECTION TIME FOR TRAINS AT TIME TABLE SPEED	34 SEC.	34 SEC.
TIME TABLE MAXIMUM TRAIN SPEED IN MILES PER HOUR	60	60
BUFFER SPEED IN MILES PER HOUR	5	5
TOTAL WARNING SYSTEM DESIGN SPEED IN MILES PER HOUR	65	65
APPROACH DISTANCE TO ISLAND EDGE IN FEET	3212	3212
HALF WIDTH OF ISLAND IN FEET	60	60
APPROXIMATE MILE POSTS FOR APPROACH CIRCUIT	91.12	92.36

✳AUTHORIZING AGENCY. NONE
✳DATE OF REQUIREMENT. NONE
✳AMOUNT OF TIME (SEC.). NONE

NEW WORK

invensys Rail

PROJ #. IL2013011
DES BY. J. WILTSIE
CHK BY. S. SPENCE
DATE. 04-26-13

= NOTE

1TRKHXP3R.S01
REV. 02-17-06

CSX TRANSPORTATION
RAIL TRANSPORT GROUP ENGINEERING
COMMUNICATIONS AND SIGNALS

TR-343 (600N RD.) 353649L

TRACK AND SIGNAL PLAN
WELLINGTON, IL M.P. 0ZA-91.74

DESIGNED	DIGITIZED	CHECKED	DATE
IRC/JCW	IRC/JCW	IRC/SWS	04-26-13

DESIGN DATE	REV. NO.	DRAWING	SHEET NO	FILE	SHEET
04-26-13	1	-----	-----	0ZA09174	S01

TOP ROW

40DAXR			XR			XPR			GPR			EOR			POR		
12		B8	12	FB	B8	22	F	B36	12	B	B82	12	FB	B81	12	FB	B62
15		C30	15	FB	C30	25	F	C30	15	B	C30	15	FB	C30	15	FB	C30
22			22						22			32	FB		22	FB	
23	F		23						25	F		35	FB		25	FB	
25	F		25	F					32						32	F	
32	F		32						35	B					35		
35			35														

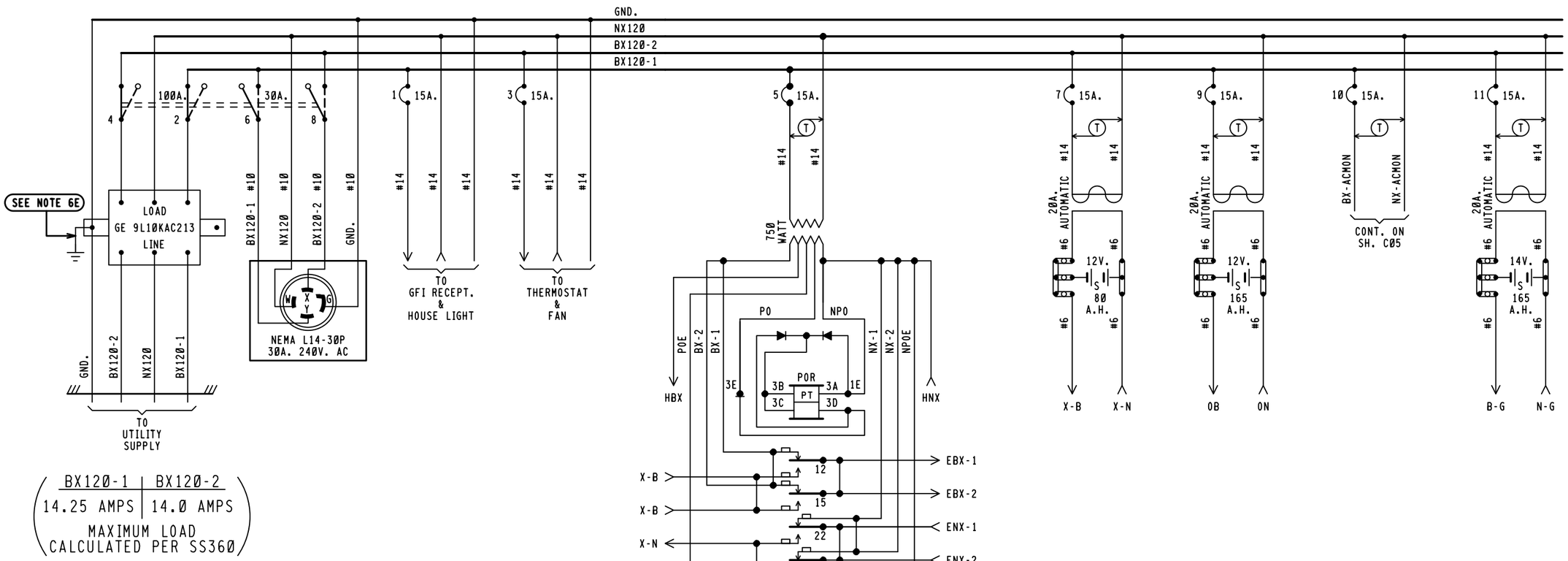

BX120-1	BX120-2
14.25 AMPS	14.0 AMPS

MAXIMUM LOAD
CALCULATED PER SS360

NOTES.

1 - REFERENCES ARE PER SCMS-13.
2 - ARRESTERS ARE PER SS382.
3 - SHELF RELAY PLACEMENT ON CONSIST CHART HAS NO SIGNIFICANCE.
4 - PLUG-IN RELAYS ARE VIEWED FROM THE FRONT OF RACK.
5 - BATTERY A.H. CAPACITY SHOWN IS THE MINIMUM REQUIREMENT.
6 - WIRING
  A - FEED TO ALL BUSSES, LIGHT CIRCUITS,MOTOR CIRCUITS TO BE #10 FLEX.
  B - 120-VOLT FEED FROM ENTRANCE TO POWER BUSS TO BE #10 FLEX.
  C - ALL TRACK WIRES TO BE #10 FLEX.
  D - ALL OTHERS TO BE #16 FLEX UNLESS NOTED.
  E - GROUND WIRE NOT NECESSARY WHEN GE ARRESTER IS MOUNTED ON GROUND PLANE OR METAL ENCLOSURE AFFIXED DIRECTLY TO BUNGALOW METALLIC STRUCTURAL MEMBER.
7 - CIRCUIT INTERRUPTERS 2 & 4 ARE MECHANICALLY INTERLOCKED WITH CIRCUIT INTERRUPTERS 6 & 8.

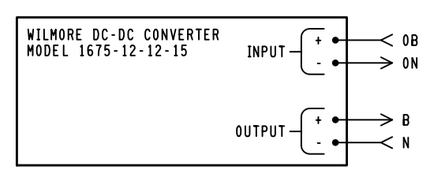

NEW WORK

invensys Rail

PROJ #. IL2013011
DES BY. J. WILTSIE
CHK BY. S. SPENCE
DATE. 04-26-13

= NOTE

1TRKHXP3R.E01
REV. 08-29-08

6'X 6' RELAY HOUSE W/FARADAY SHIELD

CSX TRANSPORTATION
RAIL TRANSPORT GROUP ENGINEERING
COMMUNICATIONS AND SIGNALS

TR-343 (600N RD.) 353649L

POWER DISTRIBUTION
WELLINGTON, IL M.P. 0ZA-91.74

DESIGNED	DIGITIZED	CHECKED	DATE
IRC/JCW	IRC/JCW	IRC/SWS	04-26-13

DESIGN DATE	REV. NO.	DRAWING	SHEET NO	FILE	SHEET
04-26-13	1	-----	-----	0ZA09174	E01

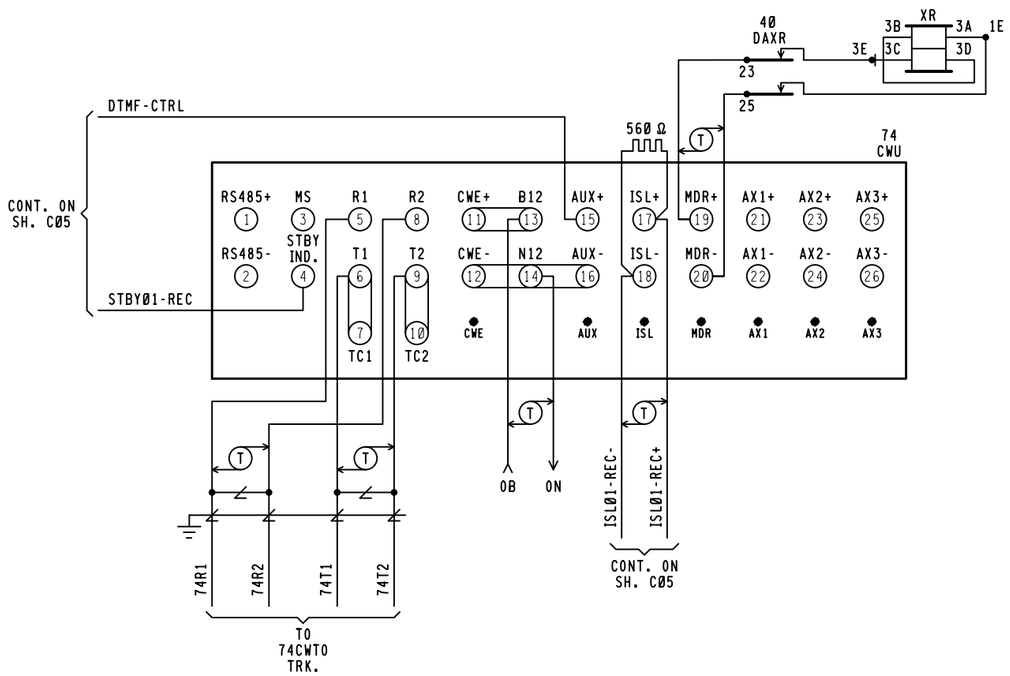

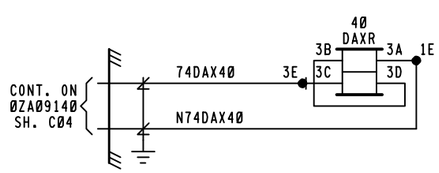

74CWU
HXP-3R MODULES REQUIRED

(NOT INSTALLED)
RMM MODULE (RECORDER MEMORY)
SIM MODULE (SERIAL INTERFACE)
SIM MODULE (SERIAL INTERFACE)
TRM MODULE (TRANSCEIVER)
TRM MODULE (TRANSCEIVER)
RSI MODULE (ISLAND)
RSI MODULE (ISLAND)
RYD MODULE (RELAY DRIVE)
RYD MODULE (RELAY DRIVE)
CPU MODULE (CENTRAL PROCESSOR UNIT)
CPU MODULE (CENTRAL PROCESSOR UNIT)
TLM MODULE (TRANSFER LOGIC)
(NOT INSTALLED) AXD MODULE
(NOT INSTALLED) AXD MODULE

FRONT VIEW

RSI MODULE
226736-001 4.0KHZ

ISLAND FREQ.
4.0KHZ

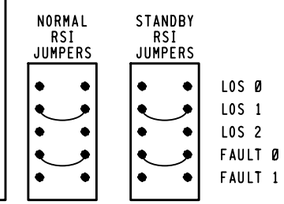

74
CWU

CABINET SWITCHES
THESE SWITCHES ARE LOCATED ON MOTHERBOARD
MASTER/SLAVE
MASTER SLAVE
S1

SYSTEM CONFIGURATION				
S6 & S7 DIP SWITCH POSITIONS				
SWITCH	1	2	3	4
SWITCH POSITION	ON	OFF	OFF	OFF
APPROACH.	NORMAL		(NOT USED)	

	FREQUENCY SELECT					
NORMAL	S2 & S3 DIP SWITCH POSITIONS 151 HZ					
	SWITCH	1	2	3	4	5
	SWITCH POSITION	ON	ON	OFF	OFF	OFF
STANDBY	S4 & S5 DIP SWITCH POSITIONS 151 HZ					
	SWITCH	1	2	3	4	5
	SWITCH POSITION	ON	ON	OFF	OFF	OFF

TLM MODULE
JUMPERS AND SWITCHES

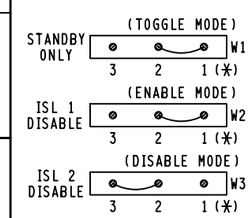

NOTE:
PIN 1 IS IDENTIFIED BY ASTERICK BELOW IT.
(☆) = MAY BE SET PER FIELD CONDITIONS.

MINUTE TIMEOUT SWITCH

SETTING	(☆) 9 MINUTES	S1

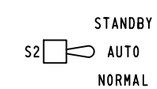

NEW WORK

invensys Rail

PROJ #: IL2013011
DES BY: J. WILTSIE
CHK BY: S. SPENCE
DATE: 04-26-13

CSX TRANSPORTATION
RAIL TRANSPORT GROUP ENGINEERING
COMMUNICATIONS AND SIGNALS

TR-343 (600N RD.) 353649L

CROSSING DETECTION CIRCUITRY
WELLINGTON, IL M.P. 0ZA-91.74

1TRKHXP3R.C01
REV. 08-31-09

DESIGNED	DIGITIZED	CHECKED	DATE
IRC/JCW	IRC/JCW	IRC/SWS	04-26-13

DESIGN DATE	REV. NO.	DRAWING	SHEET NO	FILE	SHEET
04-26-13	1	-----	-----	0ZA09174	C01

74CWU

HXP-3R APPLICATION DESIGN CARD

OPTION 90 (CABINET #)	CABINET #

PASSWORD(_ _✳_ _)(SEE MANUAL 100052-001 AA0 1-27	TRACK 1	TRACK 2	DEFAULT
APPROACH LENGTH ADJUSTMENT	3212'	N/A	9,999 FT.
WARNING TIME ADJUSTMENT	30 SEC.	N/A	99 SEC.
LUMPED IMPEDANCE ADJUSTMENT (LIA)	✳	N/A	0
TRANSMITTER CHECK ADJUSTMENT (TC)	✳	N/A	0
MOTION DETECT RESTART (MD RESTART)	0 ☆	N/A	99%
OPTION 1 TRACK ENABLE (TK-ENA)	UP	N/A	UP (ALWAYS ENABLED)
OPTION 2 TRACK FREQUENCY (TK F0)	STRAP ◇	N/A	0 HZ
OPTION 3 CONSTANT WARNING/MOTION (CW/MD)	C	N/A	d (Motion)
OPTION 4 UNI/BIDIRECTIONAL (UNI-BI)	b	N/A	b (bi)
OPTION 5 NARROW BAND COMPENSATION (NBS-C)	⊗	N/A	9,999 FT.
OPTION 6 CWE WARNING TIME (CWEWT)	80 SEC.	N/A	80 SEC.
OPTION 7 LOSS OF SHUNT TIME (LOS)	16 SEC.	N/A	16 SEC.
OPTION 8 LOS W/JOINTS NEAR ISLAND (IJ-LOS)	5 SEC. ✳✳	N/A	5 SEC.
OPTION 9 BALLAST COMPENSATION (BC)	✳	N/A	FREQUENCY DEPENDANT ◎
OPTION 10 PHASE COMPENSATION ADJUSTMENT (P-COMP)	~~✳✳✳~~	N/A	0°

	AX OPTIONS △	OPTION 11 AX DRIVE #1	OPTION 12 AX DRIVE #2	OPTION 13 AX DRIVE #3	DEFAULT
ITEM 1	TRACK ASSIGNMENT (TK-ASN)	N/A	N/A	N/A	1
ITEM 2	OFFSET DISTANCE TRACK 1 (OF-TK1)	0000'	0000'	0000'	0 FT.
ITEM 3	OFFSET DISTANCE TRACK 2 (OF-TK2)	N/A	N/A	N/A	N/A
ITEM 4	WARNING TIME (WT)	99 SEC.	99 SEC.	99 SEC.	99 SEC.
ITEM 5	MOTION DETECT RESTART (MD-RST)	99 %	99 %	99 %	99 %
ITEM 6	CONSTANT WARNING/MOTION (CW/MD)	d	d	d	d (Motion)
ITEM 7	CLEAR JOINTS LOS (CJ-LOS)	00 SEC.	00 SEC.	00 SEC.	0 SEC.
ITEM 8	POST JOINT DETECTION (PJ-DET)	15 SEC.	15 SEC.	15 SEC.	15 SEC.
ITEM 9	POST JOINT RX (PJ-RX)	15	15	15	15
ITEM 10	POSITIVE START	dn	dn	dn	dn
OPTION 17 MDR DRIVE OR AX RELAY DRIVE SELECTION (MDR-AX)			◎	N/A	dn (STATUS ONLY) ◎

	OPTION 17 SUB-MENU	TRACK 1	TRACK 2	DEFAULT
ITEM 1	MDR-AX OFFSET DISTANCE TRK. 1(OF-TK1) & TRK. 2(OF-TK2)	0000'	N/A	0 FT.= CONFIGURED AS MDR
ITEM 2	MDR-AX CLEAR JOINT LOS TIME (CJ-LOS)	00 SEC.	N/A	0 SEC.
ITEM 3	MDR-AX POST JOINT DETECTION TIME (PJ-DET)	15 SEC.	N/A	15 SEC.
ITEM 4	POST JOINT RX (PJ-RX)	15	N/A	15 (0 = DISABLE)
OPTION 18 MOTION DETECTOR TIMER (MD-TMR)		10 MIN.	N/A	10 MIN. (0 = DISABLE)
OPTION 19 MINIMUM WARNING TIME WITH ADVANCED PREEMPTION (MIN-WT)		00 SEC.	N/A	00 SEC. (0 = DISABLE)
	OPTION 20 FALSE SHUNT TIMER ADJUSTMENT (FS-TMR)			
ITEM 1	FALSE SHUNT RX (FS-RX)	0	N/A	0, 0 = DISABLE
ITEM 2	FALSE SHUNT TIMER ADJUSTMENT (FS-TM)	10	N/A	10
	OPTION 21 POSITIVE START RX & TIMER ADJUSTMENT (POS-ST)			
ITEM 1	POSITIVE START RX (POS-RX)	0	N/A	0, 0 = DISABLE
ITEM 2	POSITIVE START TIMER (POS-TM)	10	N/A	10
	OPTION 22 APPROACH RELEASE RX (AR-TM)			
ITEM 1	APPROACH RELEASE RX (AR-RX)	0	N/A	0, 0 = DISABLE
ITEM 2	APPROACH RELEASE TIMER (AR-TM)	10	N/A	10
OPTION 47 AUTO RX ADJUSTMENT (ATO-RX)		dn	N/A	dn = DISABLE
OPTION 48 PREDICTIVE FILTER ENABLE/DISABLE (PF-ENA)		dn	N/A	dn = DISABLE
OPTION 49 RESET LOCAL PARAMETERS TO DEFAULT SETTINGS (RESET)				PAGE 3-14 & 3-41
OPTION 50 RECORDER PRINTER CONTROL (PRNTR)			✥	PAGE 1-47 & 3-41
OPTION 51 CLOCK ADJUSTMENT (CLOCK)			✥	PAGE 3-32
	OPTION 70 LOCAL SERIAL I/O PORT ADJUSTMENT (LSP)			
ITEM 1	BAUD RATE	38.4	✥	PAGE 1-47 & 3-42
ITEM 2	DBITS (DATA BITS)	8	✥	PAGE 1-47 & 3-42
ITEM 3	PA (PARITY)	NO(-=NO PARITY)	✥	PAGE 1-47 & 3-42
OPTION 90 CABINET NUMBER DISPLAY (CAB)		✳		PAGE 1-47 & 3-41
OPTION 91 HXP-3 OPERATING PROGRAM VERSION NUMBER (VERS)		✳		VERSION 35.0
OPTION 99 RESET PASSWORD TIMER (TIMER)		✥		PAGE 3-30

NOTE:

✳ = ENTRY TO BE DONE ON AS-IN-SERVICE.

☆ = NORMALLY SET AT "0" SEE MANUAL 100052-001 AA0 PG. 1-46 & 3-41.

◇ = THE WORD STRAP IS DISPLAYED WHEN FREQUENCY SELECT DIP SWITCHES USED TO SELECT A STANDARD FREQUENCY.

⊗ = ADJUSTMENT NECESSARY ONLY WHEN AX RELAY DRIVE MODULE USED.

✳✳ = ADJUSTMENT NECESSARY IF INSULATED JOINTS ARE LOCATED NEAR ISLAND CIRCUIT.

~~✳✳✳~~ = ADJUSTMENT NECESSARY ONLY IF VERY POOR BALLAST CONDITIONS NEED TO BE COMPENSATED.

◎ = OPTION 17 SUB-MENU USED ONLY WHEN AX RELAY DRIVE OPERATION IS SELECTED. ENTERING AN OFFSET DISTANCE VALUE OTHER THAN ZERO ASSIGNS A MDR AS AN AX DRIVE.

△ 1. WHEN AXD MODULES ARE NOT INSTALLED, THEIR ASSOCIATED OPTIONS AND ADJUSTMENTS ARE NOT DISPLAYED.
2. PROGRAM UNUSED AX OPTION(S) SAME AS OPTION 11. IF AX OPTION 12 OR 13 IS USED IN FUTURE THEN REPROGRAM AS APPLICABLE.

◎ = FREQUENCY DEPENDANT, RANGE BETWEEN 50-250 TO BE SUPPLIED ON AS-IN-SERVICE.

✥ = OPTIONS 50-99 ARE NON-VITAL AND NOT REQUIRED FOR INITIAL SETUP. SEE MANUAL 100052-001 AA0. FOR OPTIONS 49 TO 99 SEE PAGES AS LISTED IN DEFAULT COLUMN.

✥ = SET CORRECT LOCAL TIME AND DATE. TIME OF DAY SHOULD BE SYNCRONIZED WITH TIME SHOWN BY EXTERNAL EVENT RECORDER.

NEW WORK

invensys Rail

PROJ #: IL2013011
DES BY: J. WILTSIE
CHK BY: S. SPENCE
DATE: 04-26-13

CSX TRANSPORTATION
RAIL TRANSPORT GROUP ENGINEERING
COMMUNICATIONS AND SIGNALS

TR-343 (600N RD.) 353649L

DETECTION DEVICE PROGRAM
WELLINGTON, IL M.P. 0ZA-91.74

1TRKHXP3R.C02
REV. 10-31-07

DESIGNED	DIGITIZED	CHECKED	DATE
IRC/JCW	IRC/JCW	IRC/SWS	04-26-13

DESIGN DATE	REV. NO.	DRAWING	SHEET NO	FILE	SHEET
04-26-13	1	-----	-----	0ZA09174	C02

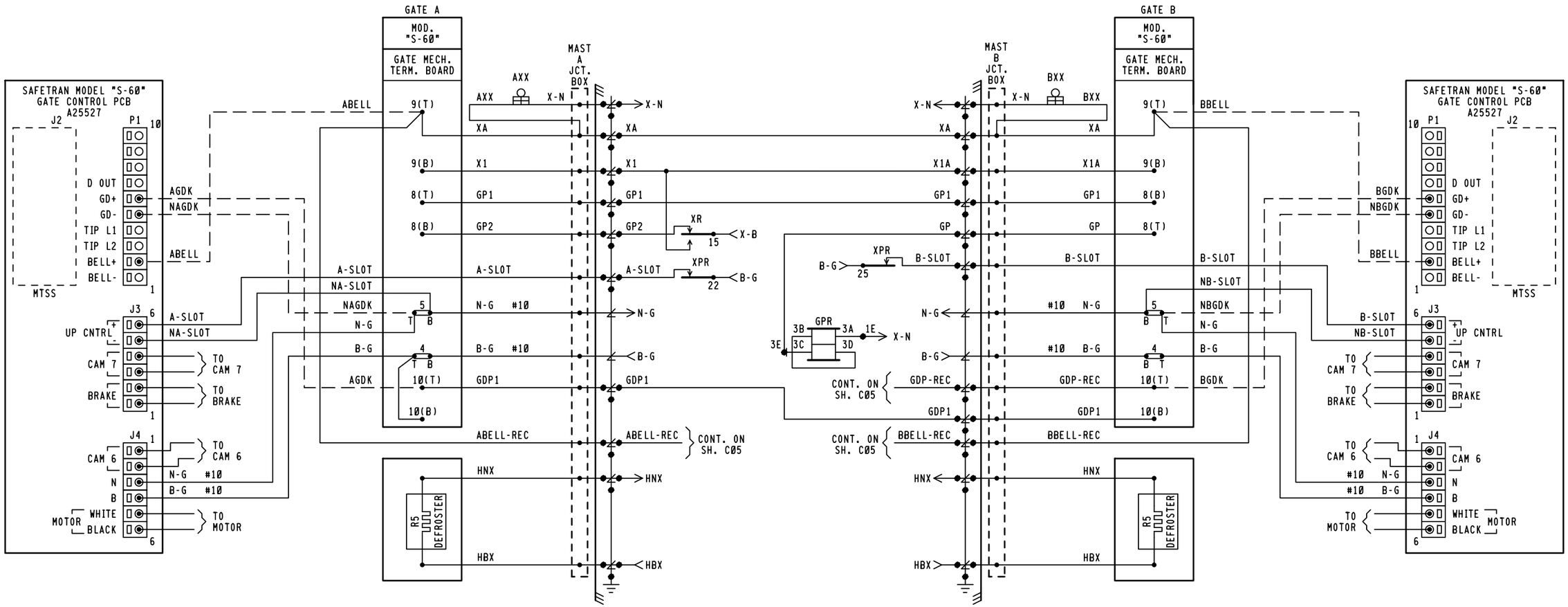

NEW WORK

invensys Rail

PROJ #. IL2013011
DES BY. J. WILTSIE
CHK BY. S. SPENCE
DATE. 04-26-13

1TRKHXP3R.C03A
REV. 03-22-12

CSX TRANSPORTATION
RAIL TRANSPORT GROUP ENGINEERING
COMMUNICATIONS AND SIGNALS

TR-343 (600N RD.) 353649L

CROSSING WARNING DEVICE GATE CIRCUITRY
WELLINGTON, IL M.P. 0ZA-91.74

DESIGNED	DIGITIZED	CHECKED	DATE
IRC/JCW	IRC/JCW	IRC/SWS	04-26-13

DESIGN DATE	REV. NO.	DRAWING	SHEET NO	FILE	SHEET
04-26-13	1	-----	-----	0ZA09174	C03

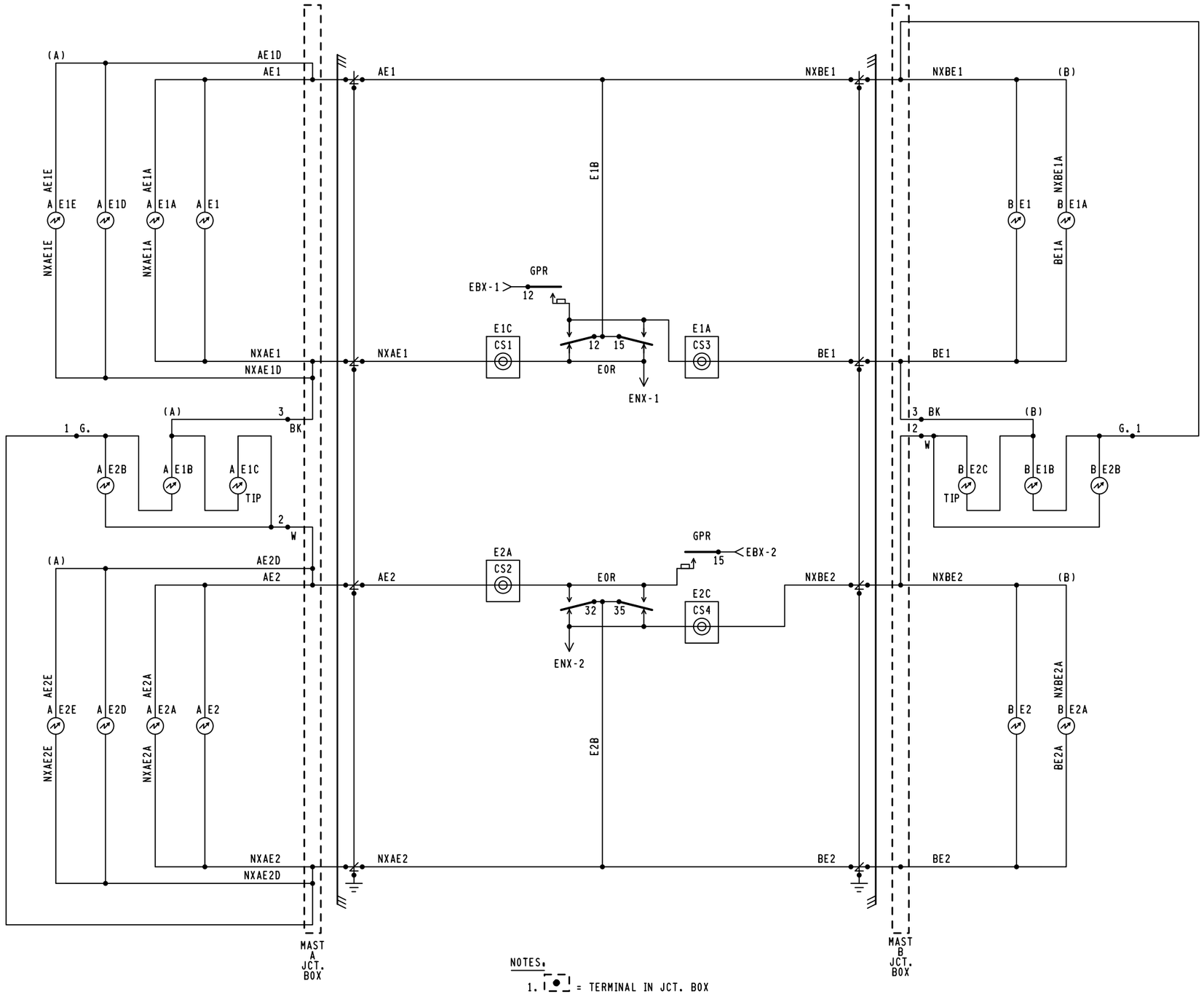

NOTES:

1. = TERMINAL IN JCT. BOX
2. WHEN 7 OR MORE LIGHTS ON A SINGLE STRUCTURE REFER TO SS-382 FOR REQUIRED ARRESTER RATING.

NEW WORK

invensys Rail

PROJ #: IL2013011
DES BY: J. WILTSIE
CHK BY: S. SPENCE
DATE: 04-26-13

CSX TRANSPORTATION

RAIL TRANSPORT GROUP ENGINEERING
COMMUNICATIONS AND SIGNALS

TR-343 (600N RD.) 353649L

CROSSING WARNING DEVICE LIGHT CIRCUITRY
WELLINGTON, IL M.P. 0ZA-91.74

1TRKHXP3R.C04
REV. 04-30-04

DESIGNED	DIGITIZED	CHECKED	DATE
IRC/JCW	IRC/JCW	IRC/SWS	04-26-13

DESIGN DATE	REV. NO.	DRAWING	SHEET NO	FILE	SHEET
04-26-13	1	-----	-----	0ZA09174	C04

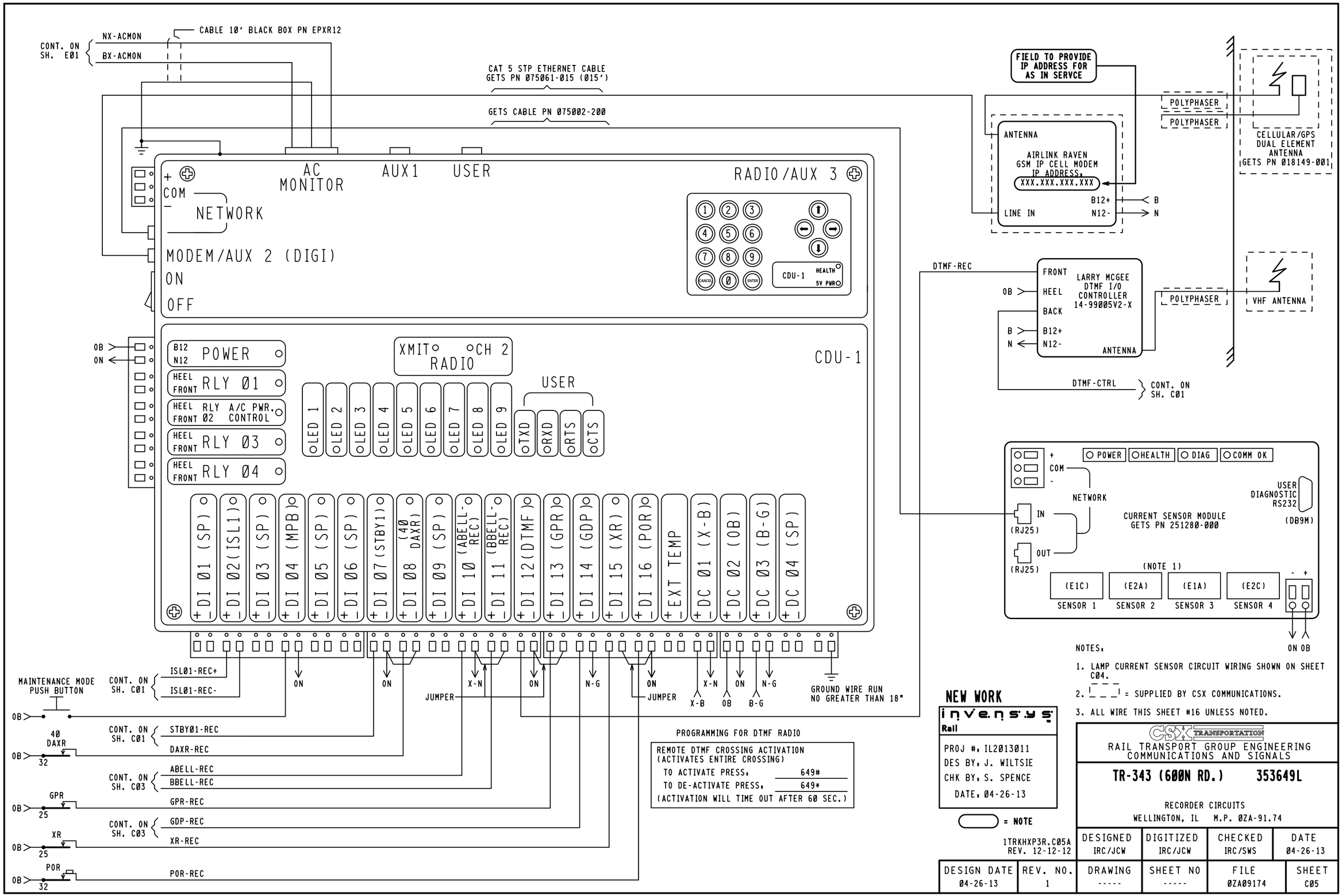

NOTES.

1. LAMP CURRENT SENSOR CIRCUIT WIRING SHOWN ON SHEET C04.
2. _ _ _ = SUPPLIED BY CSX COMMUNICATIONS.
3. ALL WIRE THIS SHEET #16 UNLESS NOTED.

PROGRAMMING FOR DTMF RADIO

REMOTE DTMF CROSSING ACTIVATION
(ACTIVATES ENTIRE CROSSING)

TO ACTIVATE PRESS. 649#

TO DE-ACTIVATE PRESS. 649*

(ACTIVATION WILL TIME OUT AFTER 60 SEC.)

NEW WORK

invensys Rail

PROJ #. IL2013011
DES BY. J. WILTSIE
CHK BY. S. SPENCE
DATE. 04-26-13

= NOTE

1TRKHXP3R.C05A
REV. 12-12-12

CSX TRANSPORTATION

RAIL TRANSPORT GROUP ENGINEERING
COMMUNICATIONS AND SIGNALS

TR-343 (600N RD.) 353649L

RECORDER CIRCUITS
WELLINGTON, IL M.P. 0ZA-91.74

DESIGNED	DIGITIZED	CHECKED	DATE
IRC/JCW	IRC/JCW	IRC/SWS	04-26-13

DESIGN DATE	REV. NO.	DRAWING	SHEET NO	FILE	SHEET
04-26-13	1	-----	-----	0ZA09174	C05

	DEFAULTS AND/OR STYLE	FIELD RECORD
HAWK EXECUTIVE PROGRAM	VERSION 2.7, COMPILED ON NOV. 11, 2003	VERSION ____, COMPILED ON _____ (FIELD TO ENTER)
CSXT USER PROGRAM (IF LOADED)	VERSION 1.01, COMPILED ON 12-01-03 (MM-DD-YY)	VERSION , COMPILED ON _____ (FIELD TO ENTER)
SYSTEM SETTINGS		
DATE & TIME (ENABLE DAYLIGHT SAVINGS TIME = Y (YES)	MM-DD-YY 23:01:59	n/a
MILE POST	XYZ-789.01	0ZA-91.74
SITE NAME	MAIN ST (SR-17,US-1)	TR-343 (600N RD.)
DOT NUMBER	123456A	353649L

NOTE TO INSPECTOR, AT IN SERVICE OF HAWK OR UPDATE OF ITS INTERNAL EXECUTIVE PROGRAM OR ITS CSXT USER PROGRAM, THE VERSION NUMBER AND COMPILE DATES OF EACH PROGRAM MUST BE INSERTED IN THE BLANK FIELDS.

BATTERY INPUTS	DC 01	DC 02	DC 03	DC 04
CHANNEL	1	2	3	4
BATTERY CHANNEL NAMES	X-B BULB BATTERY	OB ELECTRONIC BATTERY	B-G GATE BATTERY	SPARE
BATTERY CHANNEL I.D.	X-B	OB	B-G	SP
SAMPLE PERIOD	500 ms	500 ms	500 ms	10,000 ms
RESOLUTION	00.2 V	00.2 V	01.0 V	02.0 V

MODULE-DIGITAL 4 QUAD CURRENT SENSOR SERIAL NUMBER: [_____] (BLANK UNTIL AIS RECEIVED)				
RESOLUTION (AMPS RMS) : [00.2] ARMS				
AUTOMATICALLY ALLOCATED DIGITAL INPUT	DI 17	DI 18	D1 19	D1 20
DIGITAL 4 QUAD CURRENT SENSOR	1	2	3	4
NAME	E1C	E2A	E1A	E2C
ID	E1C	E2A	E1A	E2C
LIT BULB COUNT ON EACH CIRCUIT	6	6	4	4
CURRENT READING IN AMPS AT APPROXIMATE 10.0 VOLTS BULB VOLTAGE	4.6	4.6	2.6	2.6

DIGITAL INPUTS	DI 01	DI 02	DI 03	DI 04	DI 05
CHANNEL	1	2	3	4	5
NAME		ISLAND TRACK 1		MAINTENANCE PB	
ID	SP	ISL1	SP	MPB	SP
ON NAME		ISL1 UP		MAINTENANCE PB HI	
OFF NAME		ISL1 DN		MAINTENANCE PB LOW	
ON DEBOUNCE TIME	1000 ms	100 ms	1000 ms	100 ms	1000 ms
OFF DEBOUNCE TIME	1000 ms	100 ms	1000 ms	100 ms	1000 ms
TOGGLE PERIOD	500 ms	500 ms	500 ms	500 ms	500 ms

CHANNEL	1	2	3	4
NAME	RELAY OUTPUT 01	RELAY OUTPUT 02	RELAY OUTPUT 03	RELAY OUTPUT 04
I.D.	RLY01	RLY02	RLY03	RLY04
ON NAME	ON	ON	ON	ON
OFF NAME	OFF	OFF	OFF	OFF
PULSE DURATION	1000 ms	1000 ms	1000 ms	1000 ms

DIGITAL INPUTS	DI 06	DI 07	DI 08	DI 09	DI 10
CHANNEL	6	7	8	9	10
NAME		STANDBY1	DAX APPROACH		ABELL REC
ID	SP	STBY1	40DAXR	SP	ABELL-REC
ON NAME		STANDBY UNIT	40DAXR UP		BELL RINGING
OFF NAME		PRIMARY UNIT	40DAXR DN		BELL NOT RINGING
ON DEBOUNCE TIME	1000 ms	100 ms	100 ms	1000 ms	100 ms
OFF DEBOUNCE TIME	1000 ms	100 ms	100 ms	1000 ms	100 ms
TOGGLE PERIOD	500 ms	500 ms	500 ms	500 ms	500 ms

PORT	USER	AUX 1	MODEM/AUX 2
BAUD RATE	38400	9600	9600
PARITY	N	N	N
DATA BITS	8	8	8
STOP BITS	1	1	1
FLOW CONTROL	NONE	NONE	NONE

DIGITAL INPUTS	DI 11	DI 12	DI 13	DI 14	DI 15	DI 16
CHANNEL	11	12	13	14	15	16
NAME	BBELL REC	DTMF TEST	GPR	GDP	XR	POR
ID	BBELL-REC	DTMF	GPR	GDP	XR	POR
ON NAME	BELL RINGING	DTMF TEST ON	GATE VERTICAL	GATE HORIZ	XR UP	POR UP
OFF NAME	BELL NOT RINGING	DTMF TEST OFF	LIGHTS FLASH	NOT HORIZ	XR DN	POR DN
ON DEBOUNCE TIME	100 ms	100 ms	100 ms	100 ms	100 ms	100 ms
OFF DEBOUNCE TIME	100 ms	100 ms	100 ms	100 ms	100 ms	100 ms
TOGGLE PERIOD	500 ms	500 ms	500 ms	500 ms	500 ms	500 ms

NEW WORK

invensys Rail

PROJ #: IL2013011
DES BY: J. WILTSIE
CHK BY: S. SPENCE
DATE: 04-26-13

= NOTE

1TRKHXP3R.C06
REV. 04-30-04

CSX TRANSPORTATION
RAIL TRANSPORT GROUP ENGINEERING
COMMUNICATIONS AND SIGNALS

TR-343 (600N RD.) 353649L

RECORDER PROGRAM
WELLINGTON, IL M.P. 0ZA-91.74

DESIGNED	DIGITIZED	CHECKED	DATE
IRC/JCW	IRC/JCW	IRC/SWS	04-26-13

DESIGN DATE	REV. NO.	DRAWING	SHEET NO	FILE	SHEET
04-26-13	1	-----	-----	0ZA09174	C06