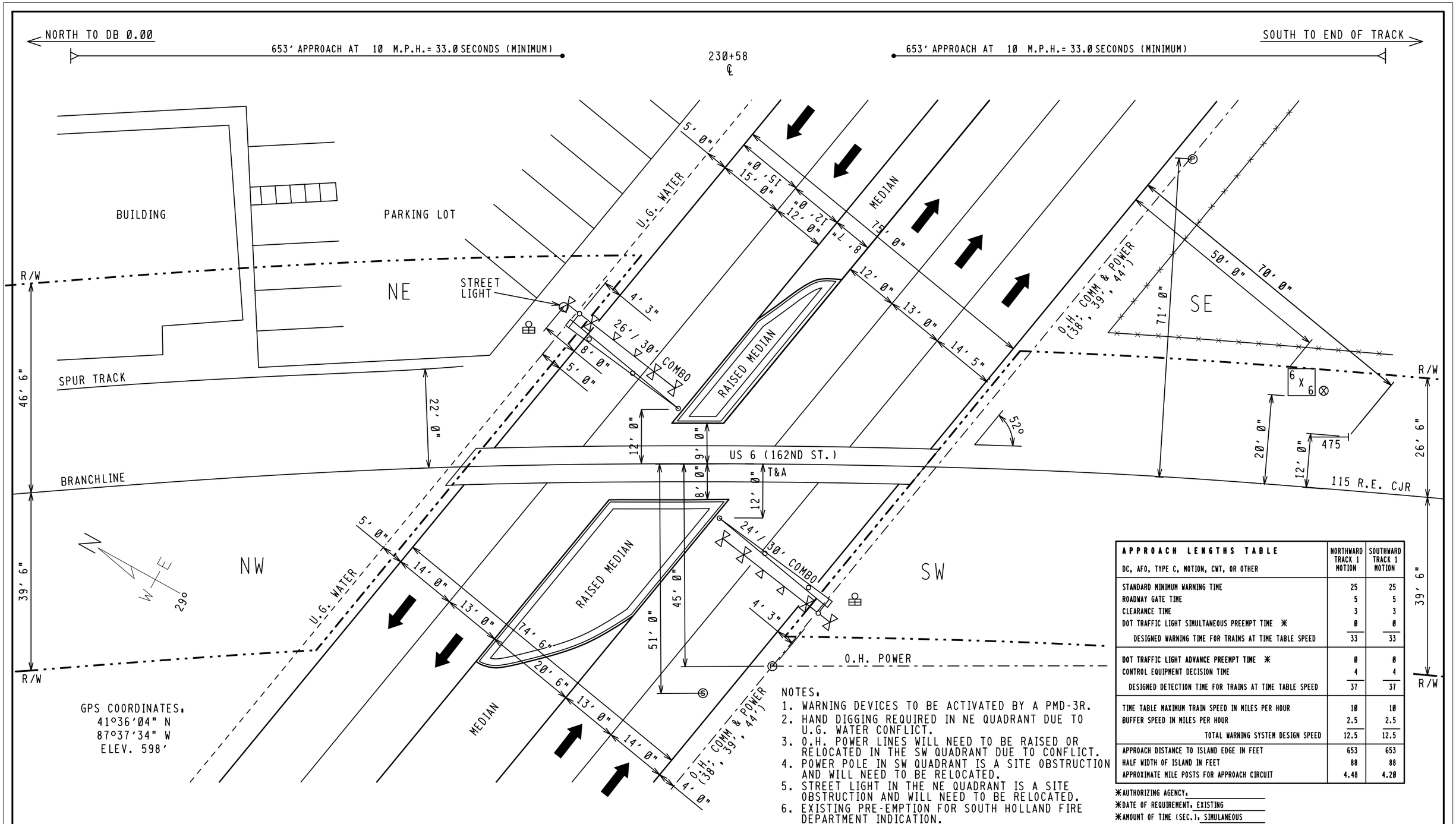

GPS COORDINATES:
41°36'04" N
87°37'34" W
ELEV. 598'

NOTES:
1. WARNING DEVICES TO BE ACTIVATED BY A PMD-3R.
2. HAND DIGGING REQUIRED IN NE QUADRANT DUE TO U.G. WATER CONFLICT.
3. O.H. POWER LINES WILL NEED TO BE RAISED OR RELOCATED IN THE SW QUADRANT DUE TO CONFLICT.
4. POWER POLE IN SW QUADRANT IS A SITE OBSTRUCTION AND WILL NEED TO BE RELOCATED.
5. STREET LIGHT IN THE NE QUADRANT IS A SITE OBSTRUCTION AND WILL NEED TO BE RELOCATED.
6. EXISTING PRE-EMPTION FOR SOUTH HOLLAND FIRE DEPARTMENT INDICATION.

APPROACH LENGTHS TABLE DC, AFO, TYPE C, MOTION, CWT, OR OTHER	NORTHWARD TRACK 1 MOTION	SOUTHWARD TRACK 1 MOTION
STANDARD MINIMUM WARNING TIME	25	25
ROADWAY GATE TIME	5	5
CLEARANCE TIME	3	3
DOT TRAFFIC LIGHT SIMULTANEOUS PREEMPT TIME ✳	0	0
DESIGNED WARNING TIME FOR TRAINS AT TIME TABLE SPEED	33	33
DOT TRAFFIC LIGHT ADVANCE PREEMPT TIME ✳	0	0
CONTROL EQUIPMENT DECISION TIME	4	4
DESIGNED DETECTION TIME FOR TRAINS AT TIME TABLE SPEED	37	37
TIME TABLE MAXIMUM TRAIN SPEED IN MILES PER HOUR	10	10
BUFFER SPEED IN MILES PER HOUR	2.5	2.5
TOTAL WARNING SYSTEM DESIGN SPEED	12.5	12.5
APPROACH DISTANCE TO ISLAND EDGE IN FEET	653	653
HALF WIDTH OF ISLAND IN FEET	88	88
APPROXIMATE MILE POSTS FOR APPROACH CIRCUIT	4.48	4.20

✳AUTHORIZING AGENCY:
✳DATE OF REQUIREMENT: EXISTING
✳AMOUNT OF TIME (SEC.): SIMULANEOUS

FILE NAME: DB00434.H01	REVISION DATES	PRODUCED FOR:	PRODUCED BY:	LEGEND				STREET NAME: US 6 (162ND ST.)
DATE DRAWN: 09/04/2012	09-28-12 DRB	CSX TRANSPORTATION	invensys Rail	CSX ROW	GUARD RAIL	METER SERVICE	⊗	CITY & STATE: SOUTH HOLLAND, IL
DRAWN BY: LEWIS, CLINT	10-29-12 DRB	RAIL TRANSPORT GROUP ENGINEERING	7775 BAYMEADOWS WAY	R/R POLELINE	O.H. POWER	POLE	Ⓟ	PROJECT #: IL2012039
CHECKED BY: WILTSIE, JOE	- -	COMMUNICATIONS AND SIGNALS	SUITE 250	GAS	FENCE	FIRE PLUG	Ⓕ	OP #: IL0384
SSC #: JXXD03188	- -		JACKSONVILLE, FL 32256	FIBER OPTIC	WATER	SEWER CAP	Ⓢ	DOT #: 163392D
					SEWER	GAS VENT	Ⓥ	

PROPOSED CROSSING LAYOUT
1"=20'

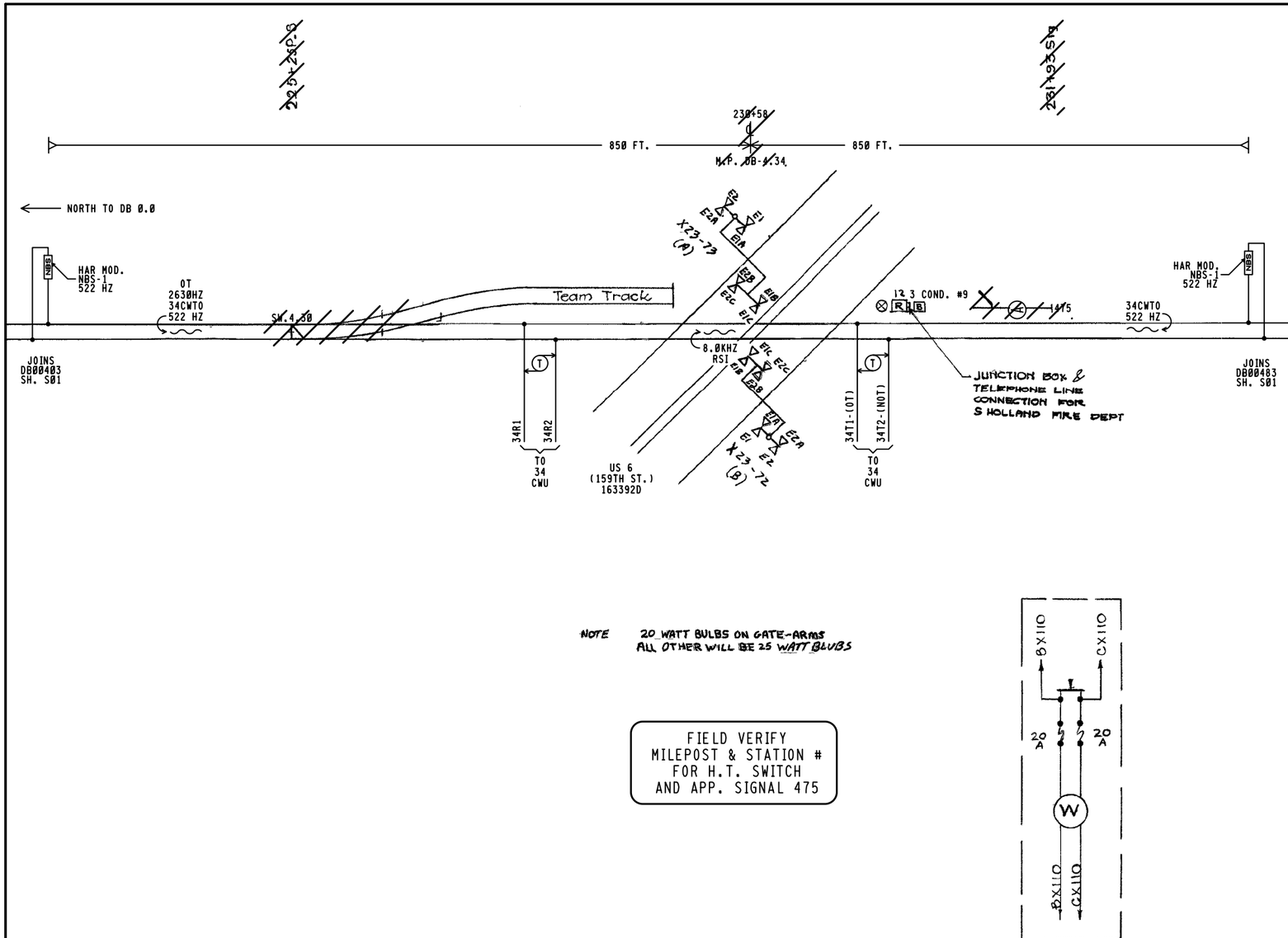

NOTE 20 WATT BULBS ON GATE-ARMS
ALL OTHER WILL BE 25 WATT BLUBS

FIELD VERIFY
MILEPOST & STATION #
FOR H.T. SWITCH
AND APP. SIGNAL 475

REVISIONS	
CREATED VECTOR 02-04-04 IRS IL1997024	
01-23-09 IRS IL2009004	
04-29-10 XRL	IL2010013
08-24-11 IRS IL2011044	

ALL ELSE OUT
VOID THIS SHEET
UPON AS-IN-SERVICE

invensys Rail

PROJ #. IL2012039
DES BY. D.BAUMGARTNER
CHK BY. D. ALBRIGHT
DATE. 10-29-12

///= SHOWN ELSEWHERE

CSX TRANSPORTATION
RAIL TRANSPORT GROUP ENGINEERING
COMMUNICATIONS AND SIGNALS

US 6 (159TH ST.) 163392D
SIGNAL 475 M.P. DB-4.75
TRACK AND SIGNAL PLAN
SOUTH HOLLAND, IL M.P. DB-4.34

DESIGNED	DIGITIZED	CHECKED	DATE
CSX	IRS/CME	IRS/RAB	02-04-04

DRAWING	SHEET NO	NEXT SH	NEXT FILE	NEXT SH	FILE	SHEET
-----	-----	-----	DB00434	C01	DB00434	S01

RASTER FILE. DB00434S01.CIT *MS FILE: DB00434.S01*

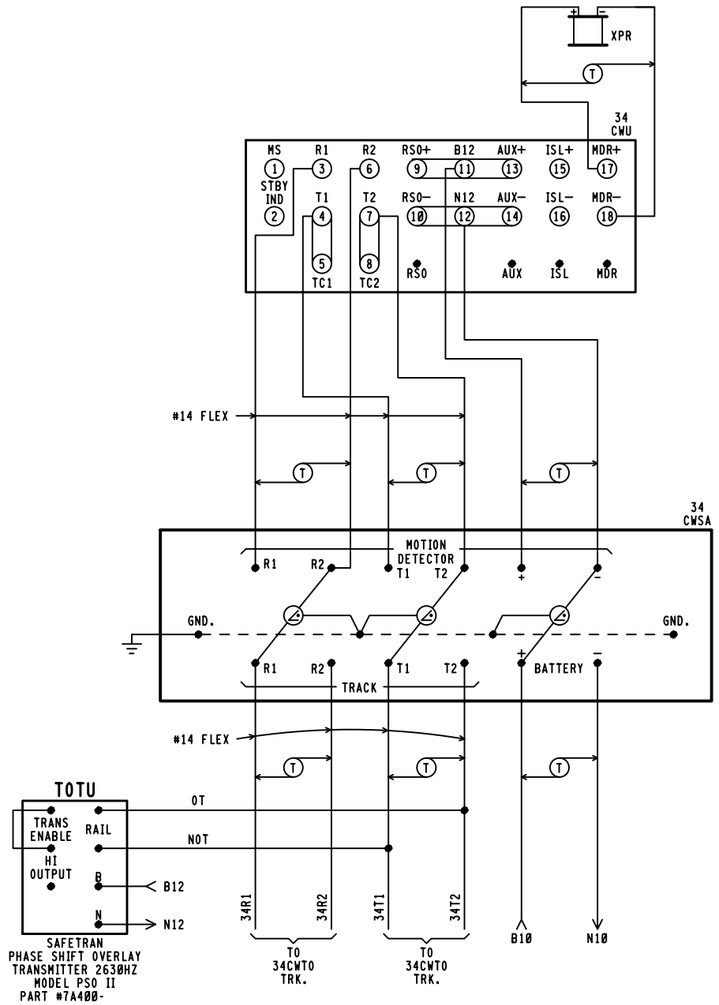

☆ = USED AS APPROACH FOR CN. RECEIVER LOCATED AT CN JCT. HOUSE.

34CWU PMD-3R MODULES REQUIRED

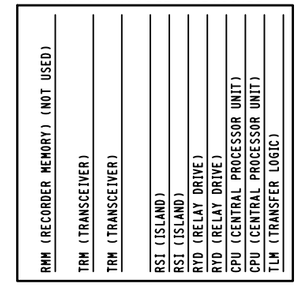

FRONT VIEW

RSI MODULE
226736-000 8.0KHZ

ISLAND FREQ.
8.0KHZ

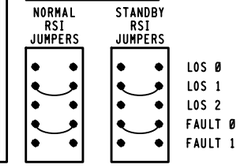

34 CWU

CABINET SWITCHES

THESE SWITCHES ARE LOCATED ON MOTHERBOARD

MASTER/SLAVE

MASTER — SLAVE

S1

SYSTEM CONFIGURATION				
S6 & S7 DIP SWITCH POSITIONS				
SWITCH	1	2	3	4
SWITCH POSITION	OFF	OFF	OFF	OFF
APPROACH:	SHORT		(NOT USED)	

	FREQUENCY SELECT					
NORMAL	S2 & S3 DIP SWITCH POSITIONS 522 HZ					
	SWITCH	1	2	3	4	5
	SWITCH POSITION	ON	ON	ON	ON	OFF
STANDBY	S4 & S5 DIP SWITCH POSITIONS 522 HZ					
	SWITCH	1	2	3	4	5
	SWITCH POSITION	ON	ON	ON	ON	OFF

TLM MODULE
JUMPERS AND SWITCHES

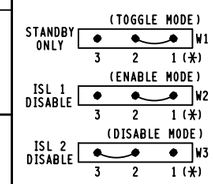

NOTE:
PIN 1 IS IDENTIFIED BY ASTERICK BELOW IT.
(☆) = MAY BE SET PER FIELD CONDITIONS.

MINUTE TIMEOUT SWITCH

SETTING	(☆) 9 MINUTES

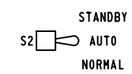

ALL OUT
VOID THIS SHEET UPON AS-IN-SERVICE

invensys Rail

PROJ #: IL2012039
DES BY: D.BAUMGARTNER
CHK BY: D. ALBRIGHT
DATE: 10-29-12

REVISIONS
08-24-11 IRS IL2011044

CSX TRANSPORTATION
RAIL TRANSPORT GROUP ENGINEERING
COMMUNICATIONS AND SIGNALS

US 6 (159TH ST.) 163392D

CROSSING DETECTION CIRCUITRY
SOUTH HOLLAND, IL M.P. DB-4.34

DESIGNED	DIGITIZED	CHECKED	DATE
CSX	IRS/TLM	IRS/LLB	08-24-11

DRAWING	SHEET NO	NEXT SH	NEXT FILE	NEXT SH	FILE	SHEET
-----	-----	-----	DB00434	C02	DB00434	C01

34CWU

TRM LOCAL PARAMETERS PMD-3R DESIGN CARD

		DEFAULTS & /OR STYLE	FIELD RECORD
OPERATING PROGRAM PROG	VERSION AND COMPILE DATE	35.0 MM/DD/YY	__/__/__
SYSTEM MONITOR PROGRAM EPRM	VERSION AND COMPILE DATE	20.2 MM/DD/YY	__/__/__
ADJUSTMENT	RANGE	DEFAULT	TRACK 1
#1 RX	100 IS INTENDED	NA	
#2 PH (PHASE)	INTENDED ABOVE 32 (NOT ADJUSTABLE)	NA	
#3 CW / MD	CW OR MD NOT ADJUSTABLE FROM MD TOWARD CW (SEE TCR 430-01 FOR CONSTRAINTS)	MD	MD
#4 UNI/BI (IF CW IS CHOSEN IN #3)	UNI OR BI	BI	NA
#5 LIA (IF CW IS CHOSEN IN #3)	-9 TO +9	LIA=0	NA
#6 WT (IF CW IS CHOSEN IN #3)	23 TO 99	WT=99	NA
#7 TC	WHEN IN CONFORMANCE WITH PMD-3R MANUAL, ADJUST TC FOR A TRANSMITTER CHECK MONITOR VALUE LESS THAN 470	NA	
#8 B (BALLAST COMPENSATION)	50 TO 250 (FIELD ADJUSTMENT - ADJUST ONLY WHEN IN CONFORMANCE WITH DATA ACCUMULATED AT THIS SITE AND IN COMPLIANCE WITH SUPERVISOR INSTRUCTIONS & PMD-3R MANUAL)	NA	
#9 PC (PHASE COMPENSATION)	0 TO +10 (FIELD ADJUSTMENT - ADJUST ONLY WHEN IN CONFORMANCE WITH SUPERVISOR INSTRUCTIONS & PMD-3R MANUAL)	PC=0	
#10 FREQ	REFERENCE, NOT ADJUSTABLE FROM MENU	NA	522 HZ
#11 FS-T (FALSE SHUNT TIMER)	ENTRANCE TO SUDDEN FALSE SHUNT SUB-MENU	NA	NA
#12 FR (FALSE SHUNT % OF RX APPROACH)	0 TO 80 NOT ADJUSTABLE FROM ZERO UNTIL AFTER STRICT DESIGN REVIEW FOR SITE APPLICATION CONFLICTS, FR=0 MEANS DISABLED (SEE TCR 430-01 FOR CONSTRAINTS)	FR=0	FR=0
#13 FT (FAULT TIMER)	0 TO 99 MINUTES (FACTORY DEFAULT IS 10)	FT=10	NA
#14 AR-T (APPROACH RELEASE TIMER)	ENTRANCE TO SUB-MENU FOR RESIDUAL FALSE SHUNT STARTED DURING TRAIN PASSAGE	NA	NA
#15 AR (FALSE SHUNT % OF RX APPROACH)	0 TO 80 NOT ADJUSTABLE FROM ZERO UNTIL AFTER STRICT DESIGN REVIEW FOR SITE APPLICATION CONFLICTS AR=0 MEANS DISABLED (SEE TCR 430-01 FOR CONSTRAINTS)	AR=0	AR=0
#16 AT (FAULT TIMER)	0 TO 99 MINUTES (FACTORY DEFAULT IS 10)	AT=10	AT=10
#17 HS (HIGHEST STABLE R VALUE)	REFERENCE, NOT ADJUSTABLE FROM MENU	NA	NA
#18 LP (LOWEST STABLE PHASE)	REFERENCE, NOT ADJUSTABLE FROM MENU	NA	NA
#19 SD (SELF DIAGNOSTICS)	REFERENCE, NOT ADJUSTABLE FROM MENU, BUT MENU CAN REVIEW, THEN CLEAR DIAGNOSTIC CODES	NA	NA
#20 REC (TRAIN RECORD DISPLAY)	REFERENCE, SEQUENTIAL DISPLAY OF PREVIOUS WARNING TIME RECORDS (NO ADJUSTMENT)	NA	NA
#21 PRN (PRINTER/LAPTOP READY)	STARTS DOWNLOAD OF INTERNAL TRAIN EVENT LOG WHEN SERIAL PORT CABLE CONNECTED	NA	NA
#22 LSP (LOCAL SERIAL PORT)	ENTRANCE TO SUB-MENU FOR SETTING SPEED OF SERIAL PORT DOWNLOADS	NA	NA
#23 @ (BAUD RATE)	BAUD RATE OF 38,400 IS 384 AND DEFAULT	@=384	@=384
#24 DB (DATA BITS)	7 OR 8 8 IS DEFAULT	DB=8	DB=8
#25 PA (PARITY)	O, E, OR N N IS DEFAULT	PA=N	PA=N
#26 AR (AUTO RX)	UP OR DN DN IS FACTORY DEFAULT (FIELD ADJUSTMENT - ADJUST TO "UP" ONLY WHEN BC HAS BEEN PREVIOUSLY STABILIZED THROUGH ADJUSTMENT, AND ONLY WHEN IN CONFORMANCE WITH SUPERVISOR INSTRUCTIONS AND PMD-3R MANUAL)	AR=DN	AR=DN
#27 RX (POTENTIOMETER VALUE)	REFERENCE, DISPLAY ONLY	NA	NA
#28 VERS (PROGRAM VERSION)	REFERENCE, SEQUENTIAL DISPLAY OF EPROM AND SOFTWARE VERSIONS	NA	NA

ALL OUT

VOID THIS SHEET UPON AS-IN-SERVICE

invensys Rail

PROJ #: IL2012039
DES BY: D.BAUMGARTNER
CHK BY: D. ALBRIGHT
DATE: 10-29-12

REVISIONS
08-24-11 IRS IL2011044

CSX TRANSPORTATION
RAIL TRANSPORT GROUP ENGINEERING
COMMUNICATIONS AND SIGNALS

US 6 (159TH ST.) 163392D

DETECTION DEVICE PROGRAM
SOUTH HOLLAND, IL M.P. DB-4.34

DESIGNED	DIGITIZED	CHECKED	DATE
CSX	IRS/TLM	IRS/LLB	08-24-11

DRAWING	SHEET NO	NEXT SH	NEXT FILE	NEXT SH	FILE	SHEET
-----	-----	-----	DB00434	C03	DB00434	C02

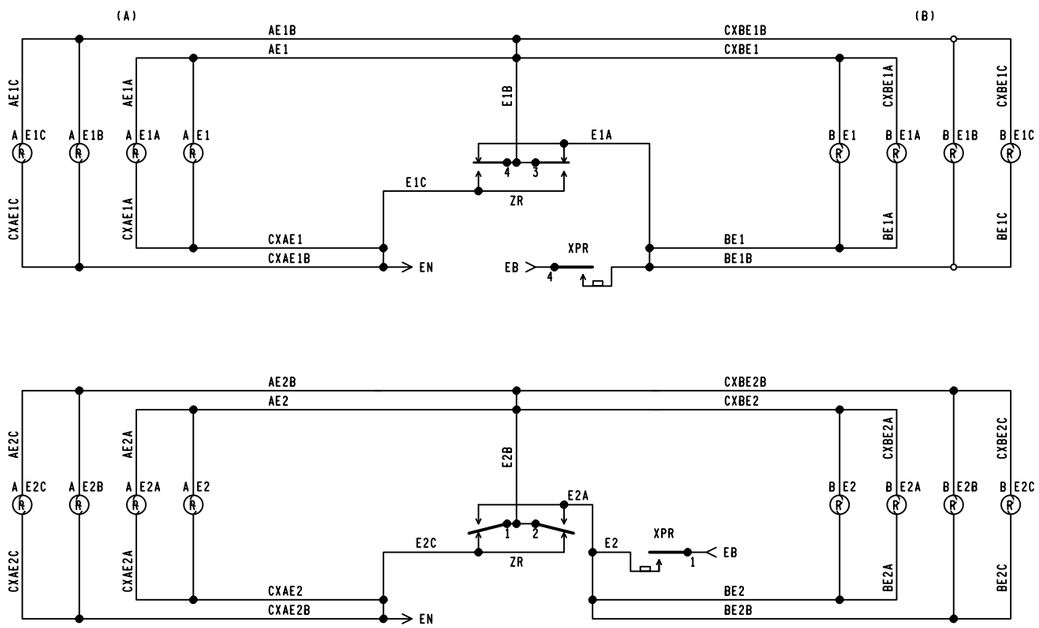

ALL OUT
VOID THIS SHEET
UPON AS-IN-SERVICE

invensys Rail

PROJ #: IL2012039
DES BY: D.BAUMGARTNER
CHK BY: D. ALBRIGHT
DATE: 10-29-12

REVISIONS	
10-3-91 SAF	
01-09-95 SWE	IL95001
02-04-04 IRS IL1997024	
01-23-09 IRS IL2009004	
04-29-10 XRL	IL2010013
08-24-11 IRS IL2011044	

CSX TRANSPORTATION
RAIL TRANSPORT GROUP ENGINEERING
COMMUNICATIONS AND SIGNALS

US 6 (159TH ST.) 163392D

CIRCUITS
SOUTH HOLLAND, IL M.P. DB-4.34

DESIGNED	DIGITIZED	CHECKED	DATE
H.V.T.	H.V.T.	J.R.W.	8-28-86

DRAWING	SHEET NO	NEXT SH	NEXT FILE	NEXT SH	FILE	SHEET
-----	-----	-----	DB00434	C04	DB00434	C03

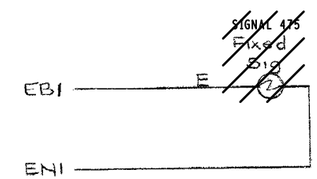

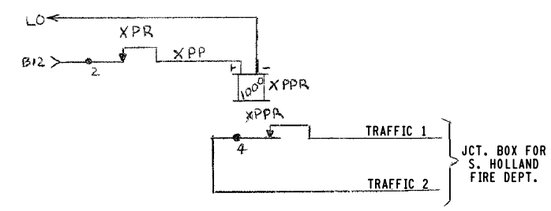

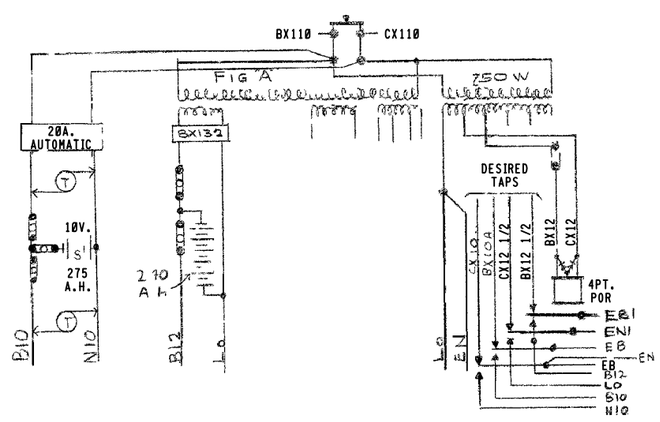

ALL ELSE OUT
VOID THIS SHEET
UPON AS-IN-SERVICE

invensys Rail

PROJ #: IL2012039
DES BY: D.BAUMGARTNER
CHK BY: D. ALBRIGHT
DATE: 10-29-12

///= SHOWN ELSEWHERE

REVISIONS
CREATED VECTOR 02-04-04 IRS IL1997024
01-23-09 IRS IL2009004
04-29-10 XRL IL2010013
08-24-11 IRS IL2011044

CSX TRANSPORTATION
RAIL TRANSPORT GROUP ENGINEERING
COMMUNICATIONS AND SIGNALS

US 6 (159TH ST.) 163392D

SIGNAL 475 M.P. DB-4.75
CIRCUITS
SOUTH HOLLAND, IL M.P. DB-4.34

DESIGNED	DIGITIZED	CHECKED	DATE
CSX	IRS/CME	IRS/RAB	02-04-04

DRAWING	SHEET NO	NEXT SH	NEXT FILE	NEXT SH	FILE	SHEET
-----	-----	-----	DB00434	C05	DB00434	C04

RASTER FILE: DB00434C04.CIT *MS FILE: DB00434.C04*

RELAY CASE WIRING FOR TO SIG & SIGS AT 159 STREET

("2 Way Steel Case G R S #56101 34 Gr I)

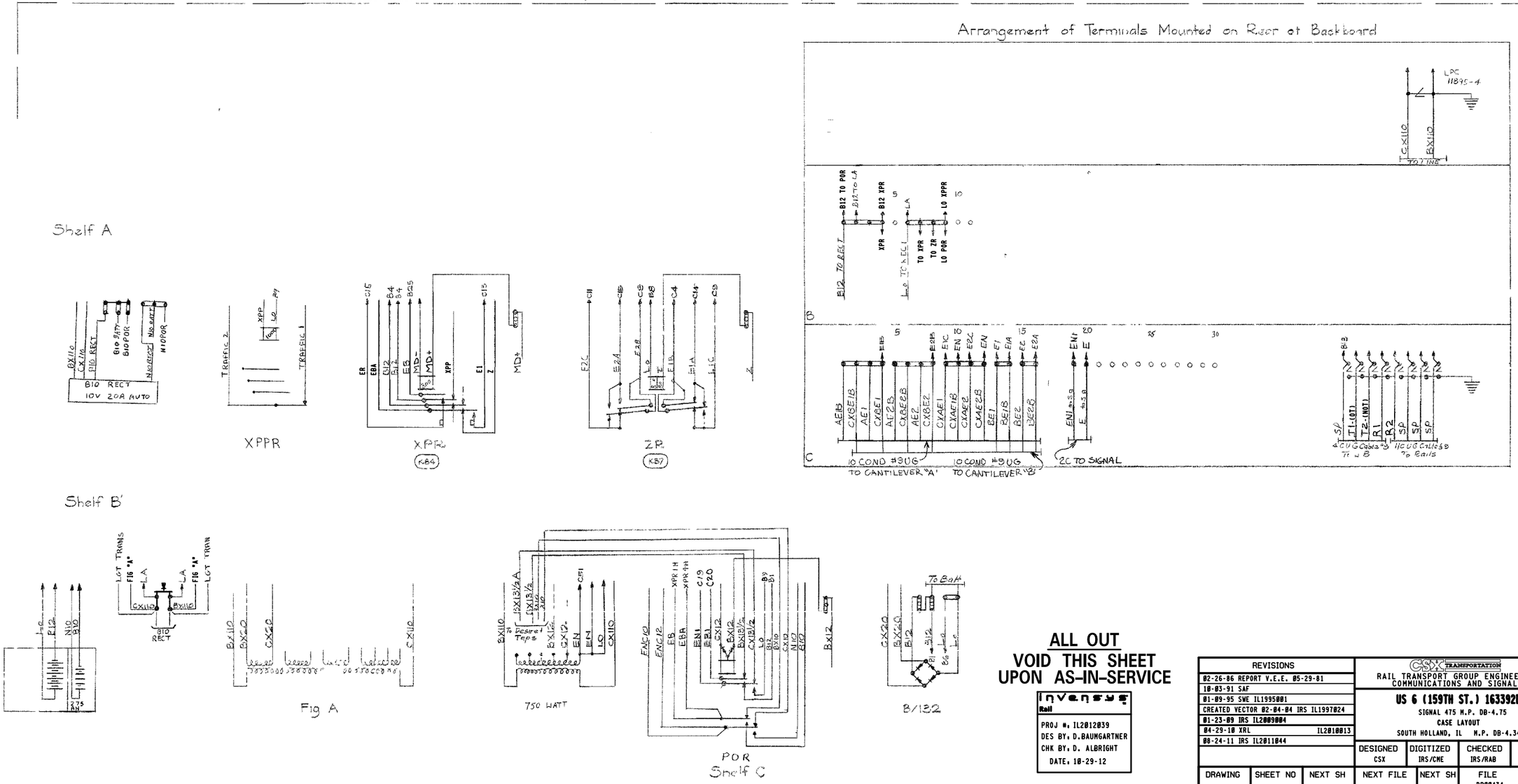

ALL OUT
VOID THIS SHEET
UPON AS-IN-SERVICE

Invensys Rail

PROJ #: IL2012039
DES BY: D.BAUMGARTNER
CHK BY: D. ALBRIGHT
DATE: 10-29-12

REVISIONS
02-26-86 REPORT V.E.E. 05-29-81
10-03-91 SAF
01-09-95 SWE IL1995001
CREATED VECTOR 02-04-04 IRS IL1997024
01-23-09 IRS IL2009004
04-29-10 XRL IL2010013
08-24-11 IRS IL2011044

CSX TRANSPORTATION
RAIL TRANSPORT GROUP ENGINEERING
COMMUNICATIONS AND SIGNALS

US 6 (159TH ST.) 163392D
SIGNAL 475 M.P. DB-4.75
CASE LAYOUT
SOUTH HOLLAND, IL M.P. DB-4.34

DESIGNED	DIGITIZED	CHECKED	DATE
CSX	IRS/CME	IRS/RAB	02-04-04

DRAWING	SHEET NO	NEXT SH	NEXT FILE	NEXT SH	FILE	SHEET
-----	-----	-----	-----	-----	DB00434	C05

RASTER FILE: DB00434C05.CIT *MS FILE: DB00434.C05*

INDEX

CONTENTS

SH. NO.		REVISION NO. 1	2	3	4	5	6	7	8	9
I01	INDEX AND REVISIONS	╱								
S01	TRACK AND SIGNAL PLAN	╱								
E01	POWER DISTRIBUTION	╱								
C01	CROSSING DETECTION CIRCUITRY	╱								
C02	DETECTION DEVICE PROGRAM	╱								
C03	CROSSING WARNING DEVICE GATE CIRCUITRY	╱								
C04	CROSSING WARNING DEVICE LIGHT CIRCUITRY	╱								
C05	RECORDER AND DTMF CONTROLLER CIRCUITS	╱								
C06	RECORDER PROGRAM	╱								

╱ = DESIGN COMPLETED

╳ = REVISION COMPLETED

= NOTE

PMD3RCPML.I01
REV. 09-30-10

REVISIONS				
REV. NO.	PROJECT NO.	DESIGN DATE	IN SERVICE DATE	REVISION DATE
1	IL2012039	10-29-12		

TO BE COMPLETED ON A.I.S.

NEW WORK

invensys Rail

PROJ #: IL2012039
DES BY: D.BAUMGARTNER
CHK BY: D. ALBRIGHT
DATE: 10-29-12

CSX TRANSPORTATION
RAIL TRANSPORT GROUP ENGINEERING
COMMUNICATIONS AND SIGNALS

US 6 (162ND ST.) 163392D

INDEX AND REVISIONS
SOUTH HOLLAND, IL M.P. DB-4.34

DESIGNED	DIGITIZED	CHECKED	DATE
IRC/DRB	IRC/DRB	IRC/DBA	10-29-12

DESIGN DATE	REV. NO.	DRAWING	SHEET NO	FILE	SHEET
10-29-12	1	-----	-----	DB00434	I01

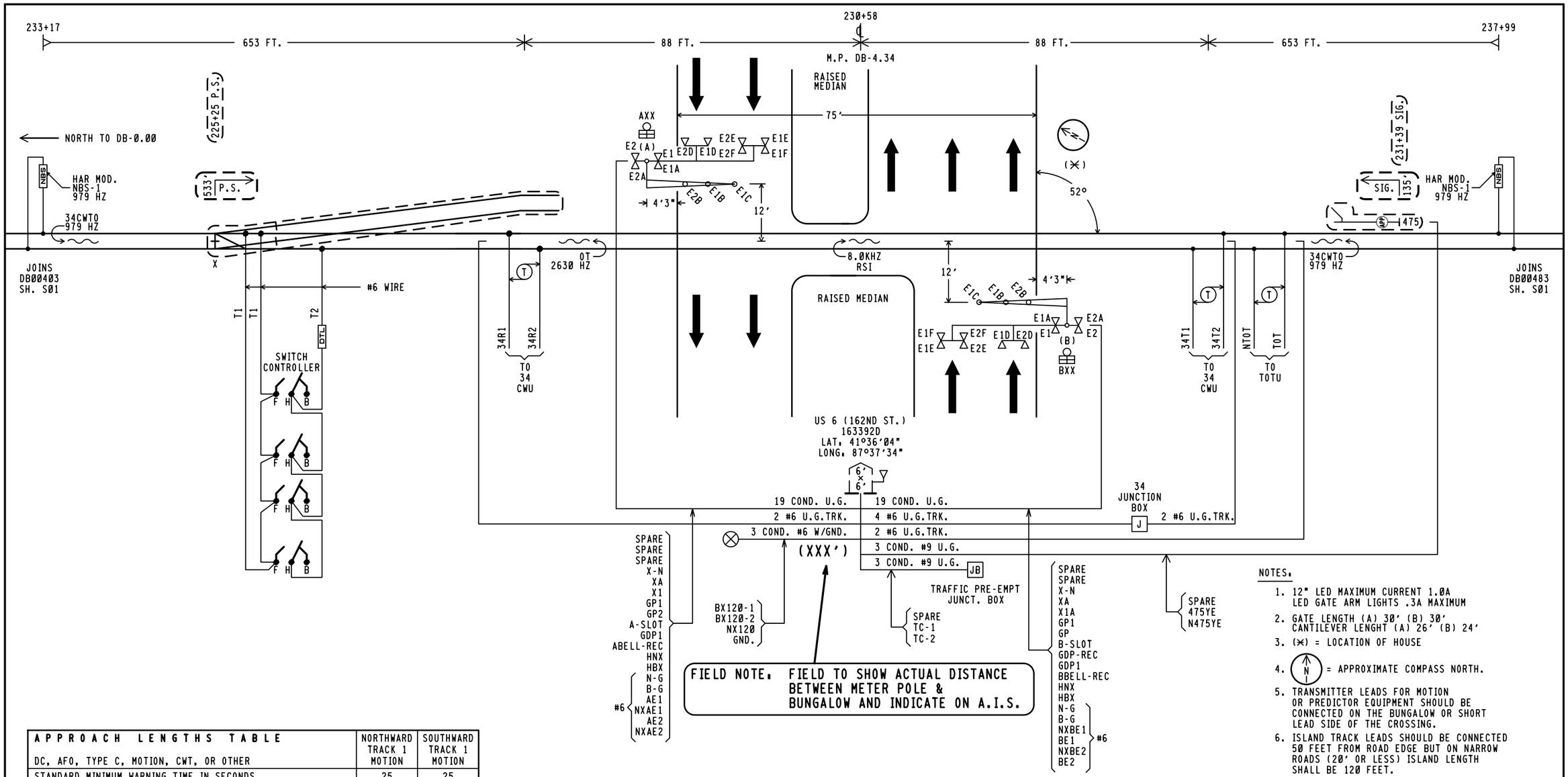

FIELD NOTE. FIELD TO SHOW ACTUAL DISTANCE BETWEEN METER POLE & BUNGALOW AND INDICATE ON A.I.S.

APPROACH LENGTHS TABLE DC, AFO, TYPE C, MOTION, CWT, OR OTHER	NORTHWARD TRACK 1 MOTION	SOUTHWARD TRACK 1 MOTION
STANDARD MINIMUM WARNING TIME IN SECONDS	25	25
ROADWAY GATE TIME IN SECONDS	5	5
CLEARANCE TIME IN SECONDS	3	3
DOT TRAFFIC LIGHT SIMULTANEOUS PREEMPT TIME IN SECONDS✳	0	0
DESIGNED WARNING TIME FOR TRAINS AT TIME TABLE SPEED	33 SEC,	33 SEC,
DOT TRAFFIC LIGHT ADVANCE PREEMPT TIME IN SECONDS ✳	0	0
CONTROL EQUIPMENT DECISION TIME IN SECONDS	4	4
DESIGNED DETECTION TIME FOR TRAINS AT TIME TABLE SPEED	37 SEC,	37 SEC,
TIME TABLE MAXIMUM TRAIN SPEED IN MILES PER HOUR	10	10
BUFFER SPEED IN MILES PER HOUR	2.5	2.5
TOTAL WARNING SYSTEM DESIGN SPEED IN MILES PER HOUR	12.5	12.5
APPROACH DISTANCE TO ISLAND EDGE IN FEET	653	653
HALF WIDTH OF ISLAND IN FEET	88	88
APPROXIMATE MILE POSTS FOR APPROACH CIRCUIT	4.48	4.20

✳AUTHORIZING AGENCY, _____
✳DATE OF REQUIREMENT, EXISTING
✳AMOUNT OF TIME (SEC.), SIMULANEOUS

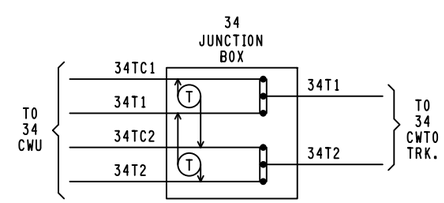

CONSTRUCTION NOTE. PLACE JUNCTION BOX AT EDGE OF BALLAST.

NOTES.

1. 12" LED MAXIMUM CURRENT 1.0A
   LED GATE ARM LIGHTS .3A MAXIMUM
2. GATE LENGTH (A) 30' (B) 30'
   CANTILEVER LENGHT (A) 26' (B) 24'
3. (✳) = LOCATION OF HOUSE
4. (N) = APPROXIMATE COMPASS NORTH.
5. TRANSMITTER LEADS FOR MOTION OR PREDICTOR EQUIPMENT SHOULD BE CONNECTED ON THE BUNGALOW OR SHORT LEAD SIDE OF THE CROSSING.
6. ISLAND TRACK LEADS SHOULD BE CONNECTED 50 FEET FROM ROAD EDGE BUT ON NARROW ROADS (20' OR LESS) ISLAND LENGTH SHALL BE 120 FEET.
7. WARNING SYSTEM APPROACH CIRCUIT DISTANCES ARE TO BE MEASURED FROM THE ISLAND TRACK CONNECTIONS.
8. DTL IS SAFETRAN 8V617-0200

NEW WORK

invensys Rail

PROJ #. IL2012039
DES BY. D.BAUMGARTNER
CHK BY. D. ALBRIGHT
DATE. 10-29-12

✳✳✳ = OUT
( ) = EXISTING

PMD3RCPML.S01
REV. 09-30-10

CSX TRANSPORTATION
RAIL TRANSPORT GROUP ENGINEERING
COMMUNICATIONS AND SIGNALS

US 6 (162ND ST.) 163392D

TRACK AND SIGNAL PLAN
SOUTH HOLLAND, IL M.P. DB-4.34

DESIGNED	DIGITIZED	CHECKED	DATE
IRC/DRB	IRC/DRB	IRC/DBA	10-29-12

DESIGN DATE	REV. NO.	DRAWING	SHEET NO	FILE	SHEET
10-29-12	1	-----	-----	DB00434	S01 (A)

TOP ROW

PER			XR			XPR			GPR			EOR			POR		
12		B8	12	FB	B8	22	F	B36	12	B	B82	12	FB	B81	12	FB	B62
15		C30	15	FB	C30	25	F	C30	15	B	C30	15	FB	C30	15	FB	C30
22			22						22			32	FB		22	FB	
23	F		23	F					25			35	FB		25	FB	
25	F		25	F					32	F					32	F	
32			32						35	B					35		
35			35														

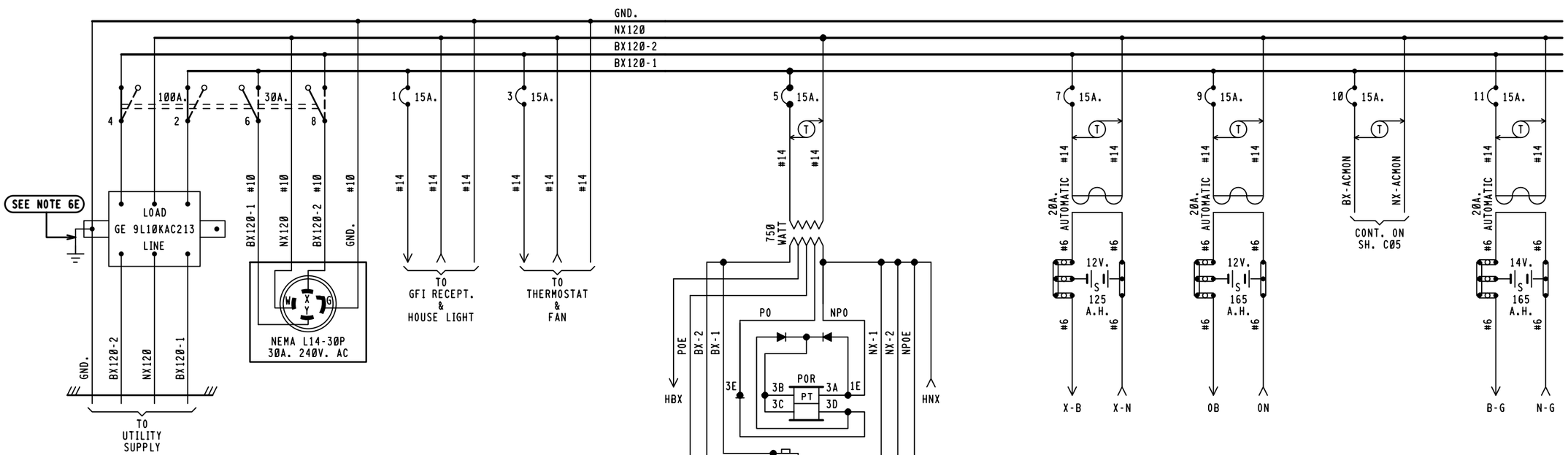

BX120-1	BX120-2
14.25 AMPS	14.0 AMPS

MAXIMUM LOAD
CALCULATED PER SS360

NOTES:

1 - REFERENCES ARE PER SCMS-13.
2 - ARRESTERS ARE PER SS382.
3 - SHELF RELAY PLACEMENT ON CONSIST CHART HAS NO SIGNIFICANCE.
4 - PLUG-IN RELAYS ARE VIEWED FROM THE FRONT OF RACK.
5 - BATTERY A.H. CAPACITY SHOWN IS THE MINIMUM REQUIREMENT.
6 - WIRING
  A - FEED TO ALL BUSSES, LIGHT CIRCUITS,MOTOR CIRCUITS TO BE #10 FLEX.
  B - 120-VOLT FEED FROM ENTRANCE TO POWER BUSS TO BE #10 FLEX.
  C - ALL TRACK WIRES TO BE #10 FLEX.
  D - ALL OTHERS TO BE #16 FLEX UNLESS NOTED.
  E - GROUND WIRE NOT NECESSARY WHEN GE ARRESTER IS MOUNTED ON GROUND PLANE OR METAL ENCLOSURE AFFIXED DIRECTLY TO BUNGALOW METALLIC STRUCTURAL MEMBER.
7 - CIRCUIT INTERRUPTERS 2 & 4 ARE MECHANICALLY INTERLOCKED WITH CIRCUIT INTERRUPTERS 6 & 8.

WILMORE DC-DC CONVERTER
MODEL 1675-12-12-15
INPUT + - OB ON
OUTPUT + - B N

NEW WORK

invensys Rail

PROJ #: IL2012039
DES BY: D.BAUMGARTNER
CHK BY: D. ALBRIGHT
DATE: 10-29-12

= NOTE

PMD3RCPML.E01H
REV. 09-30-10

6'X 6' RELAY HOUSE W/FARADAY SHIELD

CSX TRANSPORTATION
RAIL TRANSPORT GROUP ENGINEERING
COMMUNICATIONS AND SIGNALS

US 6 (162ND ST.) 163392D

POWER DISTRIBUTION
SOUTH HOLLAND, IL M.P. DB-4.34

DESIGNED	DIGITIZED	CHECKED	DATE
IRC/DRB	IRC/DRB	IRC/DBA	10-29-12

DESIGN DATE	REV. NO.	DRAWING	SHEET NO	FILE	SHEET
10-29-12	1	-----	-----	DB00434	E01

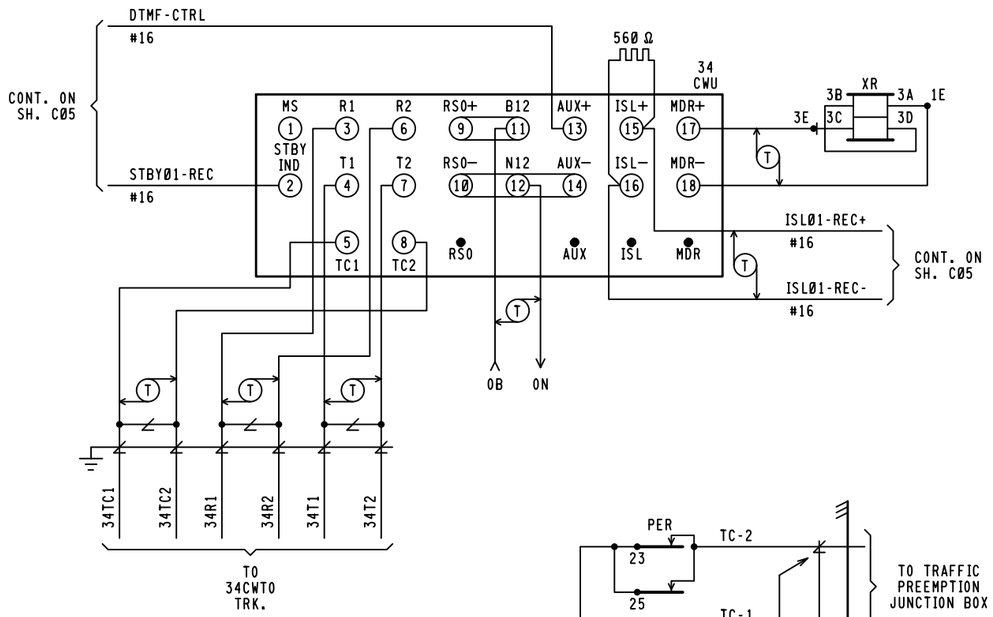

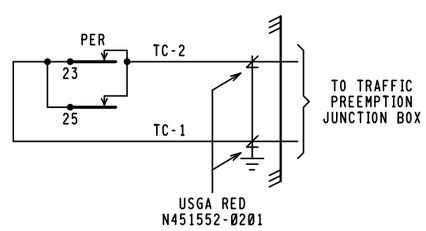

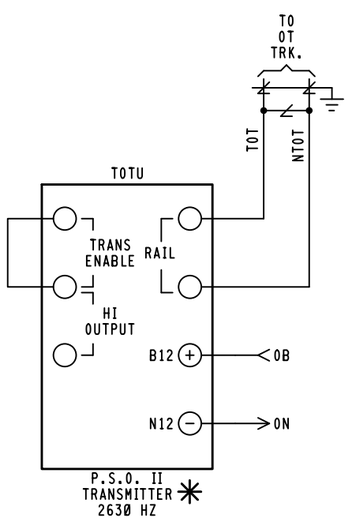

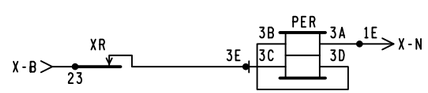

FIELD TO REUSE EXISTING PMD-3R AND P.S.O. TRANSMITTER FROM OLD CROSSING CASE

34
CWU
✳ PMD-3R MODULES REQUIRED

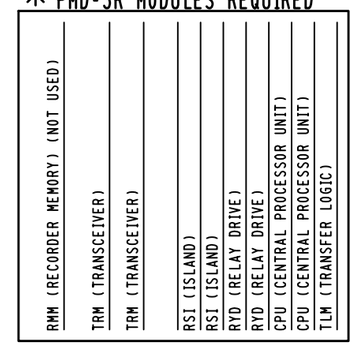

FRONT VIEW

RSI MODULE
226736-000 8.0KHZ

ISLAND FREQ.
8.0KHZ

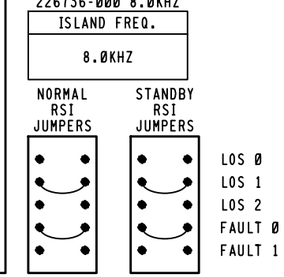

34
CWU

CABINET SWITCHES
THESE SWITCHES ARE LOCATED ON MOTHERBOARD
MASTER/SLAVE MASTER — SLAVE S1

SYSTEM CONFIGURATION				
S6 & S7 DIP SWITCH POSITIONS				
SWITCH	1	2	3	4
SWITCH POSITION	ON	OFF	OFF	OFF
APPROACH.	NORMAL		(NOT USED)	

	FREQUENCY SELECT					
NORMAL	S2 & S3 DIP SWITCH POSITIONS 979 HZ					
	SWITCH	1	2	3	4	5
	SWITCH POSITION	OFF	ON	OFF	ON	ON
STANDBY	S4 & S5 DIP SWITCH POSITIONS 979 HZ					
	SWITCH	1	2	3	4	5
	SWITCH POSITION	OFF	ON	OFF	ON	ON

TLM MODULE
JUMPERS AND SWITCHES

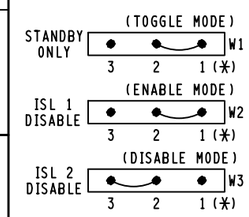

NOTE:
PIN 1 IS IDENTIFIED BY ASTERICK BELOW IT.
(☆) = MAY BE SET PER FIELD CONDITIONS.

MINUTE TIMEOUT SWITCH

SETTING	(☆) 9 MINUTES

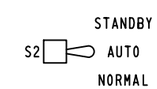

NEW WORK

invensys Rail

PROJ #: IL2012039
DES BY: D.BAUMGARTNER
CHK BY: D. ALBRIGHT
DATE: 10-29-12

✳✳✳ = OUT
✳ = REUSE EXISTING
⬭ = NOTE
PMD3RCPML.C01
REV. 12-17-10

CSX TRANSPORTATION
RAIL TRANSPORT GROUP ENGINEERING
COMMUNICATIONS AND SIGNALS

US 6 (162ND ST.) 163392D

CROSSING DETECTION CIRCUITRY
SOUTH HOLLAND, IL M.P. DB-4.34

DESIGNED	DIGITIZED	CHECKED	DATE
IRC/DRB	IRC/DRB	IRC/DBA	10-29-12

DESIGN DATE	REV. NO.	DRAWING	SHEET NO	FILE	SHEET
10-29-12	1	-----	-----	DB00434	C01 (A)

34CWU

TRM LOCAL PARAMETERS PMD-3R DESIGN CARD

		DEFAULTS & /OR STYLE	FIELD RECORD
OPERATING PROGRAM PROG	VERSION AND COMPILE DATE	35.0 MM/DD/YY	__.__ __/__/__
SYSTEM MONITOR PROGRAM EPRM	VERSION AND COMPILE DATE	20.2 MM/DD/YY	__.__ __/__/__
ADJUSTMENT	RANGE	DEFAULT	TRACK 1
#1 RX	100 IS INTENDED	NA	
#2 PH (PHASE)	INTENDED ABOVE 32 (NOT ADJUSTABLE)	NA	
#3 CW / MD	CW OR MD NOT ADJUSTABLE FROM MD TOWARD CW (SEE TCR 430-01 FOR CONSTRAINTS)	MD	MD
#4 UNI/BI (IF CW IS CHOSEN IN #3)	UNI OR BI	BI	NA
#5 LIA (IF CW IS CHOSEN IN #3)	-9 TO +9	LIA=0	NA
#6 WT (IF CW IS CHOSEN IN #3)	23 TO 99	WT=99	NA
#7 TC	WHEN IN CONFORMANCE WITH PMD-3R MANUAL, ADJUST TC FOR A TRANSMITTER CHECK MONITOR VALUE LESS THAN 470	NA	
#8 B (BALLAST COMPENSATION)	50 TO 250 (FIELD ADJUSTMENT - ADJUST ONLY WHEN IN CONFORMANCE WITH DATA ACCUMULATED AT THIS SITE AND IN COMPLIANCE WITH SUPERVISOR INSTRUCTIONS & PMD-3R MANUAL)	NA	
#9 PC (PHASE COMPENSATION)	0 TO +10 (FIELD ADJUSTMENT - ADJUST ONLY WHEN IN CONFORMANCE WITH SUPERVISOR INSTRUCTIONS & PMD-3R MANUAL)	PC=0	
#10 FREQ	REFERENCE, NOT ADJUSTABLE FROM MENU	NA	NA
#11 FS-T (FALSE SHUNT TIMER)	ENTRANCE TO SUDDEN FALSE SHUNT SUB-MENU	NA	NA
#12 FR (FALSE SHUNT % OF RX APPROACH)	0 TO 80 NOT ADJUSTABLE FROM ZERO UNTIL AFTER STRICT DESIGN REVIEW FOR SITE APPLICATION CONFLICTS, FR=0 MEANS DISABLED (SEE TCR 430-01 FOR CONSTRAINTS)	FR=0	FR=0
#13 FT (FAULT TIMER)	0 TO 99 MINUTES (FACTORY DEFAULT IS 10)	FT=10	NA
#14 AR-T (APPROACH RELEASE TIMER)	ENTRANCE TO SUB-MENU FOR RESIDUAL FALSE SHUNT STARTED DURING TRAIN PASSAGE	NA	NA
#15 AR (FALSE SHUNT % OF RX APPROACH)	0 TO 80 NOT ADJUSTABLE FROM ZERO UNTIL AFTER STRICT DESIGN REVIEW FOR SITE APPLICATION CONFLICTS AR=0 MEANS DISABLED (SEE TCR 430-01 FOR CONSTRAINTS)	AR=0	AR=0
#16 AT (FAULT TIMER)	0 TO 99 MINUTES (FACTORY DEFAULT IS 10)	AT=10	AT=10
#17 HS (HIGHEST STABLE R VALUE)	REFERENCE, NOT ADJUSTABLE FROM MENU	NA	NA
#18 LP (LOWEST STABLE PHASE)	REFERENCE, NOT ADJUSTABLE FROM MENU	NA	NA
#19 SD (SELF DIAGNOSTICS)	REFERENCE, NOT ADJUSTABLE FROM MENU, BUT MENU CAN REVIEW, THEN CLEAR DIAGNOSTIC CODES	NA	NA
#20 REC (TRAIN RECORD DISPLAY)	REFERENCE, SEQUENTIAL DISPLAY OF PREVIOUS WARNING TIME RECORDS (NO ADJUSTMENT)	NA	NA
#21 PRN (PRINTER/LAPTOP READY)	STARTS DOWNLOAD OF INTERNAL TRAIN EVENT LOG WHEN SERIAL PORT CABLE CONNECTED	NA	NA
#22 LSP (LOCAL SERIAL PORT)	ENTRANCE TO SUB-MENU FOR SETTING SPEED OF SERIAL PORT DOWNLOADS	NA	NA
#23 @ (BAUD RATE)	BAUD RATE OF 38,400 IS 384 AND DEFAULT	@=384	@=384
#24 DB (DATA BITS)	7 OR 8 8 IS DEFAULT	DB=8	DB=8
#25 PA (PARITY)	O, E, OR N N IS DEFAULT	PA=N	PA=N
#26 AR (AUTO RX)	UP OR DN DN IS FACTORY DEFAULT (FIELD ADJUSTMENT - ADJUST TO "UP" ONLY WHEN BC HAS BEEN PREVIOUSLY STABILIZED THROUGH ADJUSTMENT, AND ONLY WHEN IN CONFORMANCE WITH SUPERVISOR INSTRUCTIONS AND PMD-3R MANUAL)	AR=DN	AR=DN
#27 RX (POTENTIOMETER VALUE)	REFERENCE, DISPLAY ONLY	NA	NA
#28 VERS (PROGRAM VERSION)	REFERENCE, SEQUENTIAL DISPLAY OF EPROM AND SOFTWARE VERSIONS	NA	NA

NEW WORK

invensys Rail

PROJ #: IL2012039
DES BY: D.BAUMGARTNER
CHK BY: D. ALBRIGHT
DATE: 10-29-12

XXX = OUT

PMD3RCPML.C02
REV. 01-08-10

CSX TRANSPORTATION
RAIL TRANSPORT GROUP ENGINEERING
COMMUNICATIONS AND SIGNALS

US 6 (162ND ST.) 163392D

DETECTION DEVICE PROGRAM
SOUTH HOLLAND, IL M.P. DB-4.34

DESIGNED	DIGITIZED	CHECKED	DATE
IRC/DRB	IRC/DRB	IRC/DBA	10-29-12

DESIGN DATE	REV. NO.	DRAWING	SHEET NO	FILE	SHEET
10-29-12	1	-----	-----	DB00434	C02 A

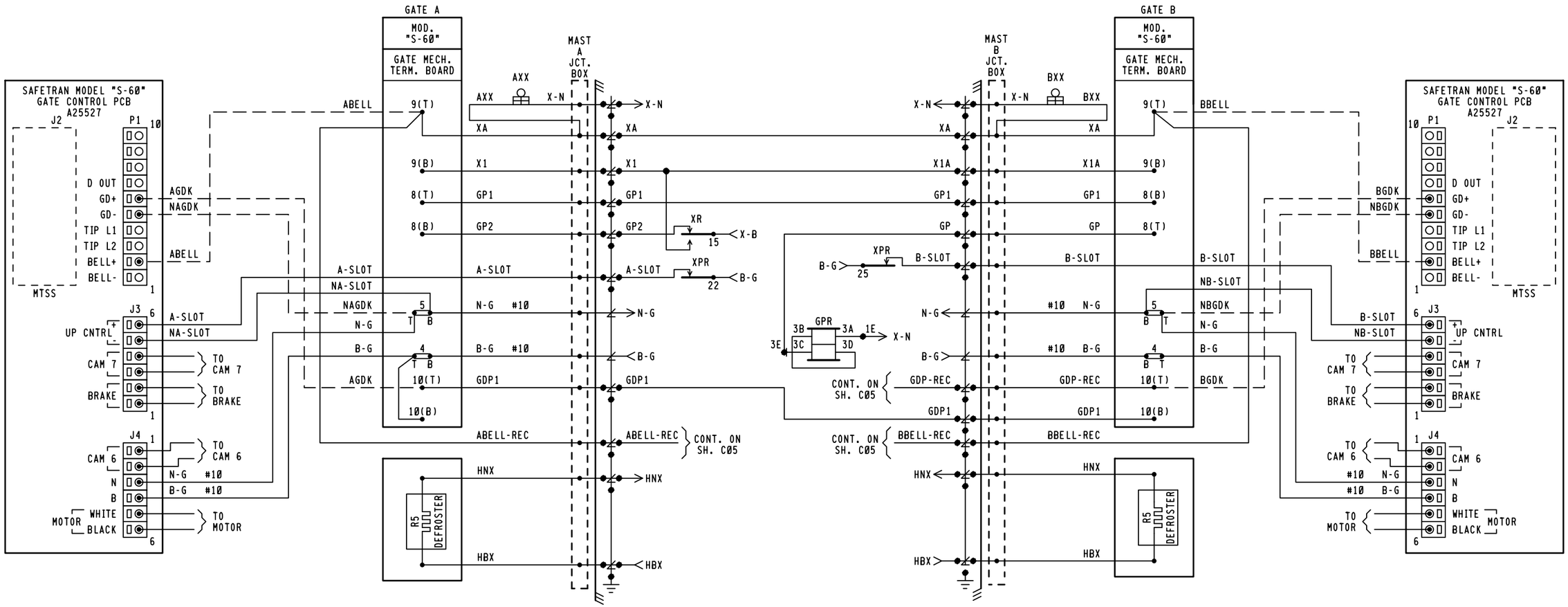

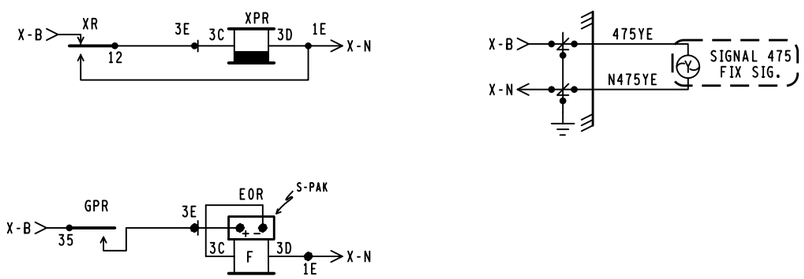

NOTES:

1. = TERMINAL IN JCT. BOX BASE
2. ALL WIRING #16 UNLESS NOTED OTHERWISE.

NEW WORK

invensys Rail

PROJ #: IL2012039
DES BY: D.BAUMGARTNER
CHK BY: D. ALBRIGHT
DATE: 10-29-12

= OUT
= EXISTING

PMD3RCPML.C03
REV. 09-30-10

CSX TRANSPORTATION
RAIL TRANSPORT GROUP ENGINEERING
COMMUNICATIONS AND SIGNALS

US 6 (162ND ST.) 163392D

CROSSING WARNING DEVICE GATE CIRCUITRY
SOUTH HOLLAND, IL M.P. DB-4.34

DESIGNED	DIGITIZED	CHECKED	DATE
IRC/DRB	IRC/DRB	IRC/DBA	10-29-12

DESIGN DATE	REV. NO.	DRAWING	SHEET NO	FILE	SHEET
10-29-12	1	-----	-----	DB00434	C03 A

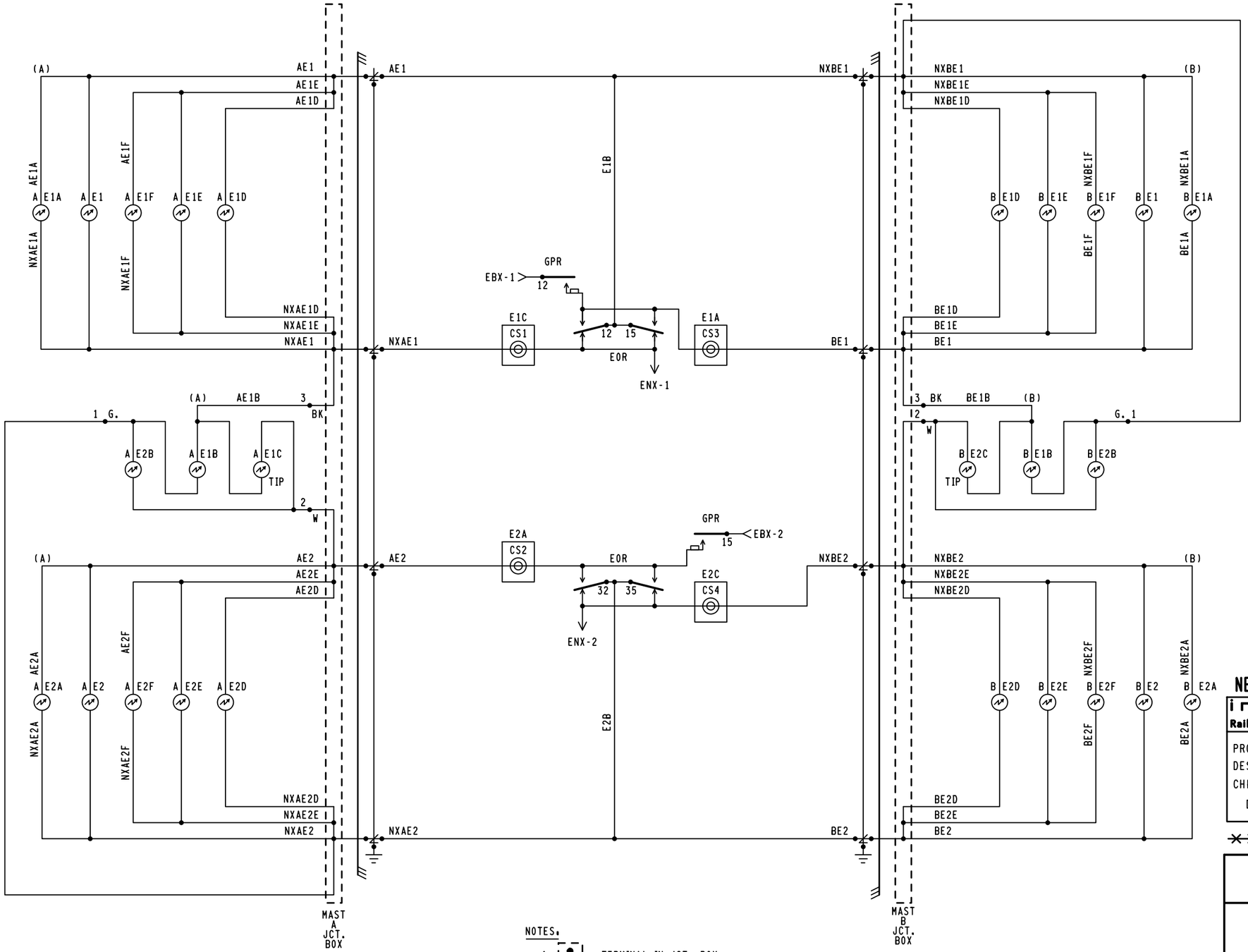

NOTES:

1. = TERMINAL IN JCT. BOX
2. WHEN 7 OR MORE LIGHTS ON A SINGLE STRUCTURE REFER TO SS-382 FOR REQUIRED ARRESTER RATING.

NEW WORK

invensys Rail

PROJ #: IL2012039
DES BY: D.BAUMGARTNER
CHK BY: D. ALBRIGHT
DATE: 10-29-12

✕✕✕ = OUT

CSX TRANSPORTATION

RAIL TRANSPORT GROUP ENGINEERING
COMMUNICATIONS AND SIGNALS

US 6 (162ND ST.) 163392D

CROSSING WARNING DEVICE LIGHT CIRCUITRY
SOUTH HOLLAND, IL M.P. DB-4.34

PMD3RCPML.C04
REV. 09-30-10

DESIGNED	DIGITIZED	CHECKED	DATE
IRC/DRB	IRC/DRB	IRC/DBA	10-29-12

DESIGN DATE	REV. NO.	DRAWING	SHEET NO	FILE	SHEET
10-29-12	1	-----	-----	DB00434	C04 (A)

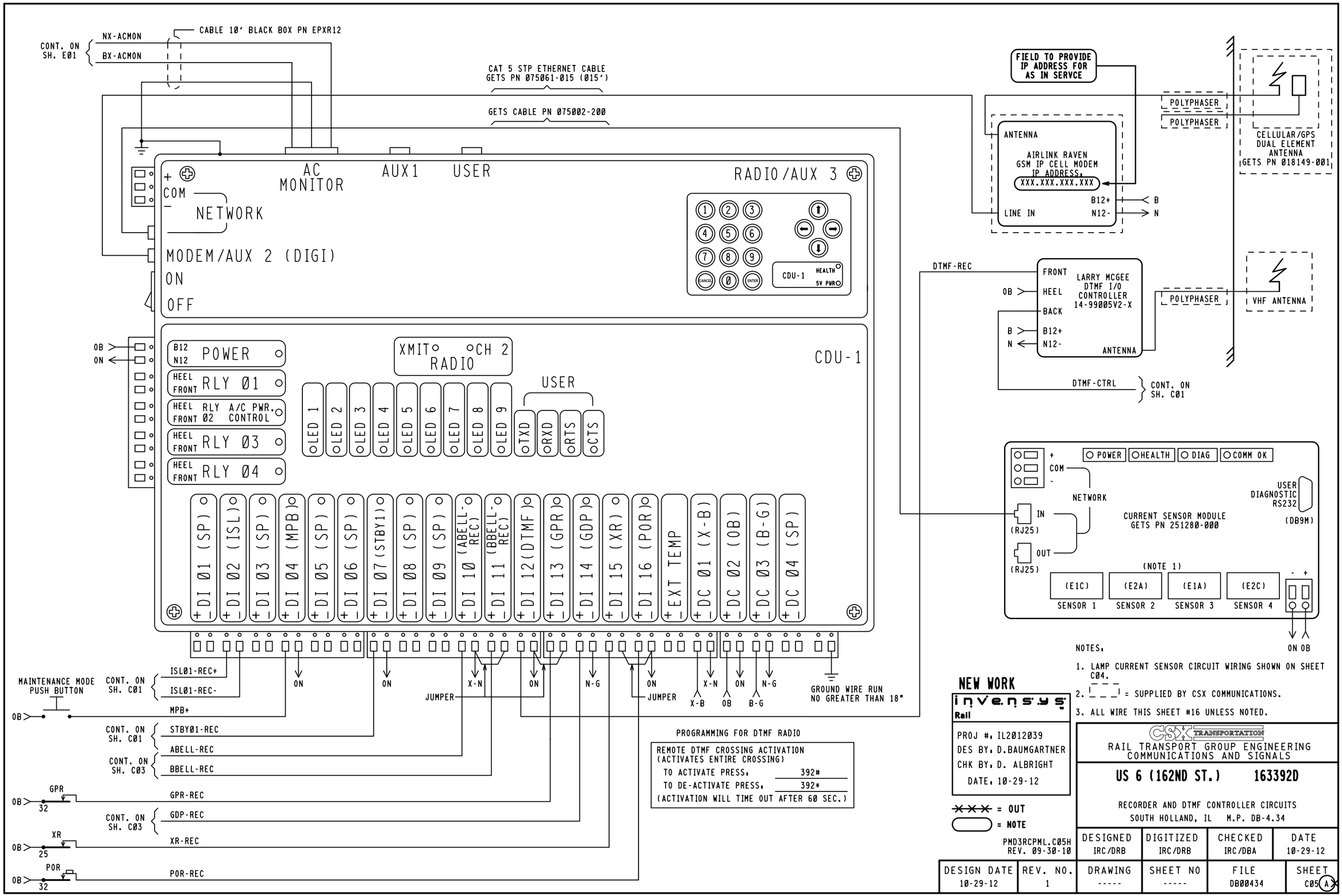
CONT. ON SH. E01
NX-ACMON
BX-ACMON
CABLE 10' BLACK BOX PN EPXR12
CAT 5 STP ETHERNET CABLE GETS PN 075061-015 (015')
GETS CABLE PN 075002-200
FIELD TO PROVIDE IP ADDRESS FOR AS IN SERVCE
POLYPHASER
POLYPHASER
CELLULAR/GPS DUAL ELEMENT ANTENNA GETS PN 018149-001
ANTENNA
AIRLINK RAVEN GSM IP CELL MODEM
IP ADDRESS.
XXX.XXX.XXX.XXX
LINE IN
B12+
N12-
B
N
AC MONITOR
AUX1
USER
RADIO/AUX 3
COM
NETWORK
MODEM/AUX 2 (DIGI)
ON
OFF
CDU-1
HEALTH
5V PWR
DTMF-REC
FRONT
HEEL
BACK
LARRY MCGEE DTMF I/O CONTROLLER 14-99005V2-X
ANTENNA
POLYPHASER
VHF ANTENNA
DTMF-CTRL
CONT. ON SH. C01
POWER
RLY 01
RLY 02 A/C PWR. CONTROL
RLY 03
RLY 04
XMIT CH 2
RADIO
CDU-1
LED 1
LED 2
LED 3
LED 4
LED 5
LED 6
LED 7
LED 8
LED 9
USER
TXD
RXD
RTS
CTS
DI 01 (SP)
DI 02 (ISL)
DI 03 (SP)
DI 04 (MPB)
DI 05 (SP)
DI 06 (SP)
DI 07 (STBY1)
DI 08 (SP)
DI 09 (SP)
DI 10 (ABELL-REC)
DI 11 (BBELL-REC)
DI 12 (DTMF)
DI 13 (GPR)
DI 14 (GDP)
DI 15 (XR)
DI 16 (POR)
EXT TEMP
DC 01 (X-B)
DC 02 (OB)
DC 03 (B-G)
DC 04 (SP)
POWER
HEALTH
DIAG
COMM OK
NETWORK
IN
(RJ25)
OUT
(RJ25)
CURRENT SENSOR MODULE GETS PN 251280-000
USER DIAGNOSTIC RS232
(DB9M)
(NOTE 1)
(E1C)
(E2A)
(E1A)
(E2C)
SENSOR 1
SENSOR 2
SENSOR 3
SENSOR 4
ON OB
MAINTENANCE MODE PUSH BUTTON
CONT. ON SH. C01
ISL01-REC+
ISL01-REC-
MPB+
STBY01-REC
ABELL-REC
CONT. ON SH. C03
BBELL-REC
GPR
GPR-REC
GDP-REC
XR
XR-REC
POR
POR-REC
JUMPER
GROUND WIRE RUN NO GREATER THAN 18"
PROGRAMMING FOR DTMF RADIO
REMOTE DTMF CROSSING ACTIVATION
(ACTIVATES ENTIRE CROSSING)
TO ACTIVATE PRESS. 392#
TO DE-ACTIVATE PRESS. 392*
(ACTIVATION WILL TIME OUT AFTER 60 SEC.)
NOTES.
1. LAMP CURRENT SENSOR CIRCUIT WIRING SHOWN ON SHEET C04.
2. = SUPPLIED BY CSX COMMUNICATIONS.
3. ALL WIRE THIS SHEET #16 UNLESS NOTED.
NEW WORK
invensys Rail
PROJ #. IL2012039
DES BY. D.BAUMGARTNER
CHK BY. D. ALBRIGHT
DATE. 10-29-12
= OUT
= NOTE
PMD3RCPML.C05H
REV. 09-30-10
CSX TRANSPORTATION
RAIL TRANSPORT GROUP ENGINEERING
COMMUNICATIONS AND SIGNALS
US 6 (162ND ST.) 163392D
RECORDER AND DTMF CONTROLLER CIRCUITS
SOUTH HOLLAND, IL M.P. DB-4.34
DESIGNED IRC/DRB
DIGITIZED IRC/DRB
CHECKED IRC/DBA
DATE 10-29-12
DESIGN DATE 10-29-12
REV. NO. 1
DRAWING -----
SHEET NO -----
FILE DB00434
SHEET C05 A

	DEFAULTS AND/OR STYLE	FIELD RECORD
EVENT ANALYZER EXECUTIVE PROGRAM	VERSION 2.7, COMPILED ON NOV. 11, 2003	VERSION ____, COMPILED ON _____ (FIELD TO ENTER)
CSXT USER PROGRAM (IF LOADED)	VERSION 1.01, COMPILED ON 12-01-03 (MM-DD-YY)	VERSION _____, COMPILED ON _____ (FIELD TO ENTER)
SYSTEM SETTINGS		
DATE & TIME (ENABLE DAYLIGHT SAVINGS TIME = Y (YES)	MM-DD-YY 23:01:59	n/a
MILE POST	XYZ-789.01	DB-4.34
SITE NAME	MAIN ST (SR-17,US-1)	US 6 (162ND ST.)
DOT NUMBER	123456A	163392D

NOTE TO INSPECTOR: AT IN SERVICE OF EVENT ANALYZER OR UPDATE OF ITS INTERNAL EXECUTIVE PROGRAM OR ITS CSXT USER PROGRAM, THE VERSION NUMBER AND COMPILE DATES OF EACH PROGRAM MUST BE INSERTED IN THE BLANK FIELDS.

EVENT ANALYZER ETHERNET PORT SETUP	
	IP ADDRESS
ETHERNET DIAGNOSTIC PORT (TOP)	192.168.13.2
ETHERNET REMOTE PORT (BOTTOM)	192.168.13.1

BATTERY INPUTS	DC 01	DC 02	DC 03	DC 04
CHANNEL	1	2	3	4
BATTERY CHANNEL NAMES	X-B BULB BATTERY	OB ELECTRONIC BATTERY	B-G GATE BATTERY	SPARE
BATTERY CHANNEL I.D.	X-B	OB	B-G	SP
SAMPLE PERIOD	500 ms	500 ms	500 ms	10,000 ms
RESOLUTION	00.2 V	00.2 V	01.0 V	02.0 V

MODULE-DIGITAL 4 QUAD CURRENT SENSOR SERIAL NUMBER: [_____] (BLANK UNTIL AIS RECEIVED)				
RESOLUTION (AMPS RMS) : [00.2] ARMS				
AUTOMATICALLY ALLOCATED DIGITAL INPUT	DI 17	DI 18	D1 19	D1 20
DIGITAL 4 QUAD CURRENT SENSOR	1	2	3	4
NAME	E1C	E2A	E1A	E2C
ID	E1C	E2A	E1A	E2C
LIT BULB COUNT ON EACH CIRCUIT	7	7	7	7
CURRENT READING IN AMPS AT APPROXIMATE 10.0 VOLTS BULB VOLTAGE	5.6	5.6	5.6	5.6

DIGITAL INPUTS	DI 01	DI 02	DI 03	DI 04	DI 05
CHANNEL	1	2	3	4	5
NAME		ISLAND TRACK 1		MAINTENANCE PB	
ID	SP	ISL	SP	MPB	SP
ON NAME		ISL 1 UP		MAINTENANCE PB HI	
OFF NAME		ISL 1 DN		MAINTENANCE PB LOW	
ON DEBOUNCE TIME	1000 ms	100 ms	1000 ms	100 ms	1000 ms
OFF DEBOUNCE TIME	1000 ms	100 ms	1000 ms	100 ms	1000 ms
TOGGLE PERIOD	500 ms	500 ms	500 ms	500 ms	500 ms

CHANNEL	1	2	3	4
NAME	RELAY OUTPUT 01	RELAY OUTPUT 02	RELAY OUTPUT 03	RELAY OUTPUT 04
I.D.	RLY01	RLY02	RLY03	RLY04
ON NAME	ON	ON	ON	ON
OFF NAME	OFF	OFF	OFF	OFF
PULSE DURATION	1000 ms	1000 ms	1000 ms	1000 ms

DIGITAL INPUTS	DI 06	DI 07	DI 08	DI 09	DI 10
CHANNEL	6	7	8	9	10
NAME		STANDBY 1			ABELL REC
ID	SP	STBY 1	SP	SP	ABELL-REC
ON NAME		STANDBY UNIT			BELL RINGING
OFF NAME		PRIMARY UNIT			BELL NOT RINGING
ON DEBOUNCE TIME	1000 ms	100 ms	1000 ms	1000 ms	100 ms
OFF DEBOUNCE TIME	1000 ms	100 ms	1000 ms	1000 ms	100 ms
TOGGLE PERIOD	500 ms	500 ms	500 ms	500 ms	500 ms

PORT	USER	AUX 1	MODEM/AUX 2
BAUD RATE	38400	9600	9600
PARITY	N	N	N
DATA BITS	8	8	8
STOP BITS	1	1	1
FLOW CONTROL	NONE	NONE	NONE

DIGITAL INPUTS	DI 11	DI 12	DI 13	DI 14	DI 15	DI 16
CHANNEL	11	12	13	14	15	16
NAME	BBELL REC	DTMF/TEST	GATE VERTICAL	GATE HORIZONTAL	XR	AC POWER OFF
ID	BBELL-REC	DTMF	GPR	GDP	XR	POR
ON NAME	BELL RINGING	DTMF TEST ON	GATE VERTICAL	GATE HORIZONTAL	XR UP	AC POWER ON
OFF NAME	BELL NOT RINGING	DTMF TEST OFF	GATE NOT VERTICAL	GATE NOT HORIZONTAL	XR DN	AC POWER OFF
ON DEBOUNCE TIME	100 ms	100 ms	100 ms	100 ms	100 ms	100 ms
OFF DEBOUNCE TIME	100 ms	100 ms	100 ms	100 ms	100 ms	100 ms
TOGGLE PERIOD	500 ms	500 ms	500 ms	500 ms	500 ms	500 ms

NEW WORK

invensys Rail

PROJ #: IL2012039
DES BY: D.BAUMGARTNER
CHK BY: D. ALBRIGHT
DATE: 10-29-12

= NOTE

PMD3RCPML.C06
REV. 01-08-10

CSX TRANSPORTATION
RAIL TRANSPORT GROUP ENGINEERING
COMMUNICATIONS AND SIGNALS

US 6 (162ND ST.) 163392D

RECORDER PROGRAM
SOUTH HOLLAND, IL M.P. DB-4.34

DESIGNED	DIGITIZED	CHECKED	DATE
IRC/DRB	IRC/DRB	IRC/DBA	10-29-12

DESIGN DATE	REV. NO.	DRAWING	SHEET NO	FILE	SHEET
10-29-12	1	-----	-----	DB00434	C06