Final Report

Waterloo, IL Area Planning Study

Prepared for: **Ameren IP**

Prepared by: **Quanta Technology**

Contact: **Mike Marshall**
mmarshall@quanta-technology.com
4020 Westchase Blvd., Suite 300
Raleigh, NC 27607
919-334-3017 (Office)
610-757-1705 (Fax)

October 3, 2009

EXECUTIVE SUMMARY 3
1 INTRODUCTION 9
2 PROJECT ASSUMPTIONS, AND INPUTS 11
2.1 ASSUMPTIONS AND CRITERIA 11
3 LOAD FORECAST 11
3.1 AREA LOAD AND GROWTH 11
4 SYSTEM MODEL, ANALYSIS AND RESULTS 12
4.1 NORMAL OPERATION – BASE YEAR 13
4.2 CONTINGENCY ANALYSIS – BASE YEAR 13
5 SOLUTION ALTERNATIVES 14
5.1 ALTERNATIVE 1 14
5.2 ALTERNATIVE 2 18
5.3 ALTERNATIVE 3 22
5.4 ALTERNATIVE 4 26
5.5 ALTERNATIVE 5 29
5.6 ALTERNATIVE 6 33
5.7 ALTERNATIVE 7 37
6 CONCLUSIONS AND RECOMMENDATIONS 40
6.1 SUMMARY OF ALTERNATIVES 40
6.2 ALTERNATIVE PROS AND CONS 41
6.3 RECOMMENDATIONS 42
APPENDIX A – AMEREN SUBTRANSMISSION PLANNING CRITERIA 43
APPENDIX B – AREA FORECAST 45
APPENDIX C – ALTERNATIVE ONE LINE DIAGRAMS 46
APPENDIX D – TRANSFORMER AND LINE LOADING FOR ALTERNATIVE 1 WORST CASE CONTINGENCIES 71

Executive Summary

Background

The purpose of this study is to analyze the current subtransmission system serving the Waterloo area to determine its adequacy in serving existing and future loads under normal operating and contingency operating conditions. The area studied encompasses loads served by the Valmeyer 138/34.5kV bulk supply substation and Dupo Ferry 138/34.5kV bulk supply substation. Recommendations are made for system improvements and changes necessary based on Ameren's subtransmission planning criteria.

The study area had a total of 83.8MW of summer peak load in 2008 with 22.6MW served by the Waterloo Municipal system and the remaining 61.2MW served by Ameren or the 8 REA Coops in the area. There is sufficient available land for residential, commercial, and industrial load growth to continue indefinitely. The area has experienced a historical growth of approximately 2% over the past 10 years and it is anticipated the same relative growth for each substation will continue for the foreseeable future.

The subtransmission system serving this area meets voltage and line and equipment loading criteria for peak load conditions but relies on Waterloo Municipal generation for voltage support under certain contingency conditions in 2008 and beyond. The study utilizes a 15 year planning horizon, meaning any solutions offered to mitigate loading or voltage issues will provide adequate service for normal and contingency conditions without dependence on local generation. The base year for the study is considered to be 2008 so the 15 year planning horizon carries through the year 2023.

Load forecasts provided by Ameren were used as the basis for the study. An analysis of the existing system revealed that under contingency conditions at peak load it fails to provide adequate voltage to the area in the base year without generation from Waterloo Municipal.

Alternatives

The following solutions were considered:

1. Bring a second 138kV supply into Valmeyer 138 substation and install an additional transformer and a high side four breaker ring bus; construct a 34.5kV line between Fountain and Waterloo

   Work includes:
   - Bring an additional 138kV supply into existing Valmeyer 138 substation
   - Add three 138kV breakers at Valmeyer 138 to form high side ring bus
   - Install an additional 138/34.5kV, 50MVA LTC transformer at Valmeyer 138
   - Install two additional 34.5kV breakers at Valmeyer 138 for low side transfer scheme
   - Build a new 34.5kV line between Fountain and Waterloo
   - Construct 34.5kV switching stations in Fountain (3 breakers) and Waterloo (4 breakers) to tie the new 34.5kV line into the existing subtransmission system

2. Tap the Cahokia-Meramec 1, 138kV line with a three breaker switching station; Build a 138kV line into the Fountain area and construct a new 138/34.5kV substation in Fountain; build a 34.5kV line between Fountain and Waterloo and construct switching station at the Waterloo terminal

   Work includes:
   - Tap the Cahokia-Meramec 1, 138kV line with a three breaker switching station
   - Build 138kV transmission line from the switching station into Fountain area
   - Construct a new 138/34.5kV Fountain substation with a 50MVA LTC transformer, transformer breakers (high and low side) and three low side breakers
   - Build a new 34.5kV line between new Fountain substation and Waterloo
   - Construct a 34.5kV breaker station in Waterloo to tie new 34.5kV line from Fountain into the existing subtransmission system.

   Note: A variation of this, called Alternative 2a, is also considered. In this alternative the new Fountain substation is built in the same yard as the 138kV breaker station where the Cahokia-Meramec 1 line is tapped. This eliminates the need for a new 138kV line but does extend the amount of new 34.5kV line required.

3. Bring a second 138kV supply into Valmeyer 138 and install an additional transformer and a high side ring bus; build a 34.5kV line from Valmeyer 138 to Waterloo

   Work includes:
   - Bring additional 138kV supply into existing Valmeyer 138 substation
   - Add three 138kV breakers at Valmeyer 138 to form high side ring bus
   - Install additional 138/34.5kV, 50MVA transformer at Valmeyer 138
   - Construct a new 34.5kV line from Valmeyer 138 to Waterloo
   - Construct a 34.5kV switching station in Waterloo with four breakers to tie new line into the existing subtransmission system
   - Install three additional 34.5kV breakers at Valmeyer 138 for low side transfer scheme and supply for new 34.5kV feeder to Waterloo

4. Construct new 34.5kV line from Fountain to Waterloo
   Note: no new substation transformer capacity is installed with this option. It is presented as a short term solution and is considered because this work is required for other options. It can be used as a means of deferring one of the other alternatives for up to five years.

   Work includes:
   - Build new 34.5kV line from Fountain to Waterloo
   - Construct 34.5kV switching stations in Fountain (3 breakers) and Waterloo (4 breakers) to tie the new 34.5kV line into the existing subtransmission system

5. Tap the Cahokia-Meramec 1 138kV line with a three breaker switching station and build a 138kV line from it into the Fountain area; construct a new Fountain 138/69kV substation and build a new 69kV line from it to Waterloo; Replace the existing 138/34.5kV

transformer at Valmeyer with a 139/69kV unit; convert a portion of the 34.5kV system to 69kV; build a 34.5kV line from Fountain to Waterloo to maintain the 34.5kV loop in that area

Work includes:

- Tap the Cahokia-Meramec 1, 138kV line with a three breaker switching station
- Build a 138kV transmission line from the breaker station into the Fountain area
- Construct a new 138/69kV Fountain substation with a 50MVA LTC transformer, transformer high side breaker and one low side feeder breaker.
- Build a new 69kV line between the new Fountain substation and Waterloo
- Build a new 34.5kV line between Fountain and Waterloo to maintain the 34.5kV loop in that area
- Replace the 138/34.5kV transformer at Valmeyer 138 with a 138/69kV LTC unit.
- The existing Line 3338 is built to 69kV specs and will be operated as such under this alternative. All transformers currently supplied by this feeder will be converted to 69kV high side with the exception of the Ameren Waterloo substation. That substation will continue to be served by the existing 34.5kV supply to it.

- Construct a switching station in Waterloo with two 69kV breakers to tie the lines from Valmeyer 138 and the new Fountain substation together. These also become the new supplies for Waterloo Muni (currently dual rated transformer and can accept 69kV). This switching station also includes a 34.5kV breaker to tie the new 34.5kV line from Fountain into the existing subtransmission system
- The new Fountain 69kV substation also includes a 34.5kV breaker used to tie the new 34.5kV line between Fountain and Waterloo into the existing subtransmission system

Note: A variation of this, called Alternative 5a, is also considered. In this alternative the new Fountain substation is built in the same yard as the 138kV breaker station where the Cahokia-Meramec 1 line is tapped. This eliminates the need for a new 138kv line but does extend the amount of new 69kV line required.

6. Add a 138/69kV Transformer at Valmeyer; Tap the Cahokia-Meramec 1, 138kV line with a three breaker switching station; build a 138kV line from the new station into Fountain and a 138/69kV substation. Build a new 69kV line from the new substation to Waterloo and convert a portion of the existing 34.5kV system to 69kV; build a new 34.5kV line from Valmeyer 138 to Waterloo to maintain 34.5kV loop in that area

Work includes:

- Tap the Cahokia-Meramec 1, 138kV line with a three breaker switching station
- Build a 138kV transmission line from the breaker station into the Fountain area
- Construct a new 138/69kV Fountain substation with a 50MVA LTC transformer, transformer high side breaker and one low side feeder breaker
- Build a 69kV line from new Fountain substation to Waterloo Install a 138/69kV 50MVA LTC transformer at Valmeyer 138 substation along with high and low side breaker
- Construct a switching station in Waterloo with two 69kV breakers to tie the lines from Valmeyer 138 and the new Fountain substation together. These also be-

come the new supplies for Waterloo Muni (currently dual rated transformer and can accept 69kV)

- The existing Line 3338 is built to 69kV specs and will be operated as such under this alternative. All transformers currently supplied by this feeder will be converted to 69kV high side with the exception of the Ameren Waterloo substation. That substation will continue to be served by the existing 34.5kV supply to it.

Note: A variation of this, called Alternative 6a, is also considered. In this alternative the new Fountain substation is built in the same yard as the 138kV breaker station where the Cahokia-Meramec 1 line is tapped. This eliminates the need for a new 138kv line but does extend the amount of new 69kV line required.

7. Tap the Cahokia-Meramec 1, 138kV line with a three breaker switching station; Build a 138kV transmission line from the switching station into Waterloo and construct a new 138/34.5kV substation in Waterloo

   Work includes:
   - Tap the Cahokia-Meramec 1, 138kV line with a three breaker switching station
   - Build a 138kV transmission line from the switching station into Waterloo
   - Construct a new 138/34.5kV substation in Waterloo with a 50MVA LTC transformer along with a high side breaker, transformer low side breaker and three feeder breakers. These 34.5kV feeders will tie into the existing subtransmission system and serve Waterloo Muni

The following table summarizes the benefit in terms of added load serving capacity and cost of each alternative.

Alternative	Total Additional Load Serving Capability Provided for Study Area (MW)	Additional Load Assumed Served by Waterloo Municipal (MW)	Additional Load Served in the Remainder of Study Area (MW)	Year Additional System Reinforcement Required	Estimated Cost
1	30.6	12.9	17.7	2024	$18,600,000
2	43.4	18.3	25.1	2031	$22,900,000
2a	43.4	18.3	25.1	2031	$17,900,000
3	41.5	17.5	24	2030	$18,700,000
4	13.1	5.2	7.9	2014	$7,900,000
5	43.4	18.3	25.1	2031	$26,000,000
5a	43.4	18.3	25.1	2031	$22,000,000
6	43.4	18.3	25.1	2031	$31,400,000
6a	43.4	18.3	25.1	2031	$27,400,000
7	45.2	19.1	26.1	2032	$29,600,000

The following table lists the advantages and disadvantages of each alternative. These along with the costs were considered in making a final recommendation.

Alternatives	Pros	Cons
1. 2nd 34KV Bulk sub at Valmeyer. +Fountain-Waterloo 34KV line	- Maintains 34KV network - Waterloo Muni on Firm Bus - facilitates long range 69kV plans	- ICC certificate required - Build another 138 line into Valmeyer
2. 34KV Bulk sub at Fountain. +Fountain-Waterloo 34KV line	- Maintains 34KV network - Waterloo Muni on Firm Bus	- ICC certificate required - 138KV ring bus in flood plain
2a. Same as Alt. 2, except 34KV Bulk sub at 138KV Tap	- ICC Certificate NOT required - Least cost - Multiple 34KV sources/lines	- Bulk supply sub & 138KV ring bus in flood plain
3. 2nd 34KV Bulk Trf at Valmeyer. +Double-ckt Valmeyer-Waterloo line.	- Maintains 34KV network - Waterloo Muni on Firm Bus	- ICC certificate required - Double-circuit Valmeyer-Waterloo line
4. Fountain-Waterloo 34KV line only.	- Interim plan - Meets the needs for next few years at minimal cost	- Limited capacity gained
5. 69KV Bulk Sub at Fountain. +Replace Valmeyer w/69KV Bulk. +34&69KV Fountain-Waterloo line	- Potential for more capacity	- ICC Certificate required - Valmeyer sub on radial line - 138KV ring bus in flood plain
5a. Same as Alt. 5 except 69KV Bulk Sub at 138 KV tap.	- Potential for more capacity - ICC certificate NOT required	- Bulk supply sub & 138KV ring bus in flood plain - Valmeyer on radial line
6. 69KV Bulk Sub at Fountain. +Add 69KV Bulk at Valmeyer +Fountain-Waterloo 69KV line +34&69KV Valmeyer-Waterloo line	- Potential for more capacity - Maintains 34KV network	- ICC Certificate required - 138KV ring bus in flood plain - Highest cost
6a. Same as Alt. 6, except 69KV Bulk Sub at 138KV tap.	- Potential for more capacity - Maintains 34KV network - ICC certificate NOT required	- Bulk supply sub & 138KV ring bus in flood plain - Valmeyer sub on radial line
7. 138KV all the way to Waterloo. Bulk sub at Waterloo.	- Potential for significant additional capacity if 2nd 138KV line is built	- ICC Certificate required - High cost - By itself, capacity gain is comparable to other alternatives.

Recommendations

The preferred and recommended plan is Alternative 1, which involves expansion of the 34 kV system and the bulk supply at Valmeyer Substation. Options that involve construction of a switching station or a bulk supply substation in the Mississippi River bottom area were avoided. These include alternatives 2, 2a, 5, 5a, 6, 6a, and 7. Alternative 4 is an interim option. So the final decision was between alternatives 1 and 3. The costs for these differ by only $100,000 so the decision was based on other factors. Alternative 1 allows for using alternative 4 as an interim solution thereby spreading out the cost of the project over a period of 5 years or more.

The recommended plan is to pursue construction of switching stations near Fountain and near Waterloo and a new 34.5 kV line from Fountain to Waterloo in the near term (alternative 4). The addition of a second 138/34 kV transformer at Valmeyer and second 138 kV supply to Valmeyer would then be pursued at a later date which will be dependent on the load growth in the area.

Facilities should be built to 69 kV specifications to facilitate future upgrade to 69 kV operation. The long range or horizon strategy would be to begin upgrading the system to 69 kV as needed to meet load growth by adding a 138/69 kV bulk supply transformer at Valmeyer and establishing a second bulk supply source into the area from the east.

1 Introduction

This study has been performed by Quanta Technology in support of Ameren IP (Ameren) for the work defined in the Services Agreement Statement of Work 3, dated October 10th, 2008 between Ameren and Quanta Technology, which is to provide Ameren with engineering assistance for an area study of the Waterloo, IL service territory and general vicinity. The area is served by 2-138/34.5kV bulk supply stations – Dupo Ferry Road and Valmeyer. Two 34.5kV lines, 3338 and 3341are supplied by these substations and serve the area. A one line diagram showing the area substations and 34.5kV facilities is shown in Figure 1.

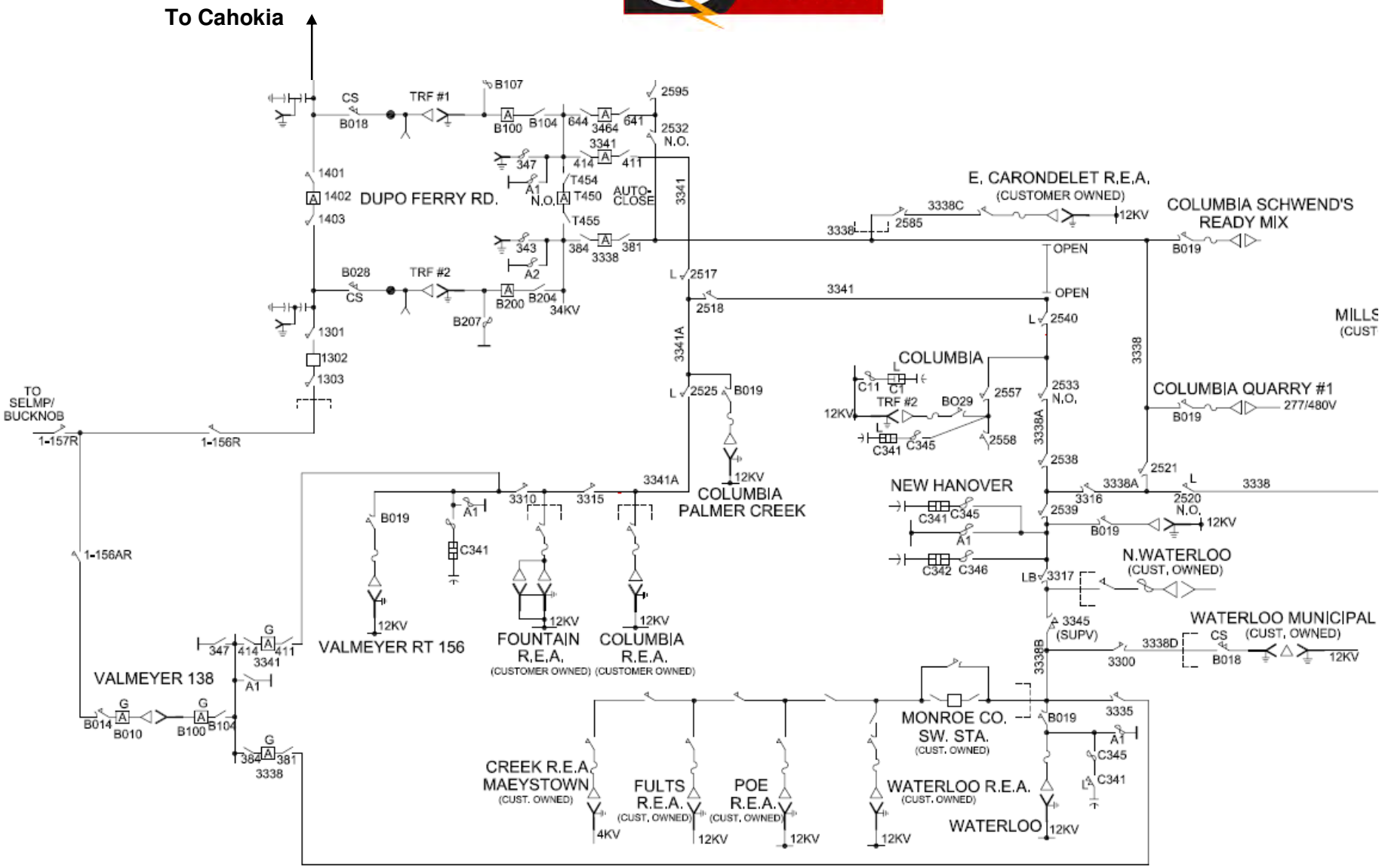

Figure 1 – Study area

The purpose of this study is to analyze the current subtransmission system serving the area to determine its adequacy in serving existing and future loads under normal operating and contingency operating conditions. Recommendations will be made for system improvements and changes necessary based on Ameren's subtransmission planning criteria.

The study utilizes a 15 year planning horizon, meaning any solutions offered to mitigate loading or voltage issues will provide adequate service for normal and contingency conditions. The base year for the study is considered to be 2008 so the 15 year planning horizon carries through the year 2023. It is worth noting the Valmeyer substation and the 34.5kV line between it and Waterloo are insulated at 69kV. Two of the alternatives considered utilize that line at 69kV.

2 Project Assumptions, and Inputs

2.1 Assumptions and Criteria

The base year considered for this study is 2008. Ameren's Subtransmission System Planning Criteria and Guidelines were used as the basis for normal and contingency analysis and these are shown in Appendix A. Voltages and line loads are determined at 100% peak conditions and at contingency conditions that include 100%, 65% and 20% criteria.

- 100% - analyzes the ability to supply 100% system peak load under normal operating and contingencies conditions. Contingencies include loss of any single subtransmission or transmission component.
- 65% - analyzes the ability to supply 65% of peak load under certain contingency conditions. These include loss of a single bulk supply transformer along with a high probability 1st contingency outage (line or generator); also includes planned subtransmission bus outage.
- 20% - analyzes the ability to supply 20% of peak load under normal operating conditions with all capacitor banks off line.

It is assumed that equipment overloads and voltage issues outside of the immediate study area that impact the results of this study are corrected during the horizon years. Waterloo Municipal has 15 MW of generation available. For the purposes of the study this generation was not considered to be a part of any solutions considered.

3 Load Forecast

3.1 Area Load and Growth

The study area had a total of 83.8MW of summer peak load in 2008 with 22.6MW served by the Waterloo Municipal system and the remaining 61.2MW served by Ameren or the 8 REA Coops in the area. There is sufficient available land for residential, commercial, and industrial load

growth to continue indefinitely. The area has experienced a historical growth of approximately 2% over the past 10 years and it is anticipated this same relative growth will continue for the foreseeable future.

The 20 year peak load forecast for substations within the study area is shown in Appendix B. Waterloo Municipal provided the forecast for their system and the remainder of the substation load forecast was provided by Ameren. All load forecasts have been weather normalized to account for year to year deviations from "normal" baseline weather conditions.

The forecast is broken down between Ameren substations, REA substations and large customer substations. The REA substation titled "Monroe County Switching Station" is a 34.5kV supply switchyard that serves four REA substations – Maeystown, Fults, Waterloo REA and POE.

4 System Model, Analysis and Results

Quanta Technology used Ameren's PSS/E model for their Belleville service area which includes the Waterloo study area. This model was used for the normal load and contingency studies. The loads listed in the forecast are non-diversified substation peak loads. In order to account for load diversity a 0.9 multiplier was used for each substation. The exception to this was the Waterloo Municipal load which was input at its actual value given the relative size of the load at this single delivery point and the interest in evaluating the ability to serve additional load at that location.

Conductor load limits, monitored voltage thresholds and contingency conditions were provided as part of the model supplied by Ameren.

The following bulk supply substations serve the area:

- Dupo Ferry Road – 2-138/34.5kV, transformers (T1 – 50MVA, T2 – 93.3MVA) with three 34.5kV feeders, two of which serve the study area. These are lines 3338 and 3341.

- Valmeyer – 1-138/34.5kV 56MVA transformer with 2 34.5kV feeders serving the area. These are lines 3338 and 3341, which also tie to the Dupo Ferry Road subtransmission lines.

15MW on site generation at Waterloo Municipal – not utilized in this analysis

4.1 Normal Operation – Base Year

The normal operation of the system with no elements out of service and at peak load conditions was first analyzed. The results of this showed no equipment overloads or voltage violations for the 2008 base year. Under normal peak load conditions (non-contingency) the existing system can adequately serve the area through year 2017 with no voltage or overload violations. At that point low voltage violations begin to occur at the Monroe County switching station. This station supplies Maeystown, POE, Waterloo REA, and Fults substations.

4.2 Contingency Analysis – Base Year

Per the Ameren subtransmission planning criteria the contingency cases for the 100%, 65%, and 20% load conditions were analyzed. For the base year 2008, the contingency outage of 34.5kV line 3338 between Valmeyer 138 and Waterloo results in low voltage (below 0.9PU) for Waterloo Muni, Ameren Waterloo and the Monroe County Switching station delivery point.

In order to alleviate the low voltage situation under this contingency it is necessary to shed 5MW of load among those substations that are affected. Another solution is to incorporate an equivalent amount of local generation which is available at Waterloo Muni. The PSS/E one line for the load shedding scenario is shown in Figure 2.

For the 65% and 20% contingency cases no equipment overloads or voltage violations occurred and the system is able to satisfactorily serve the area under those conditions.

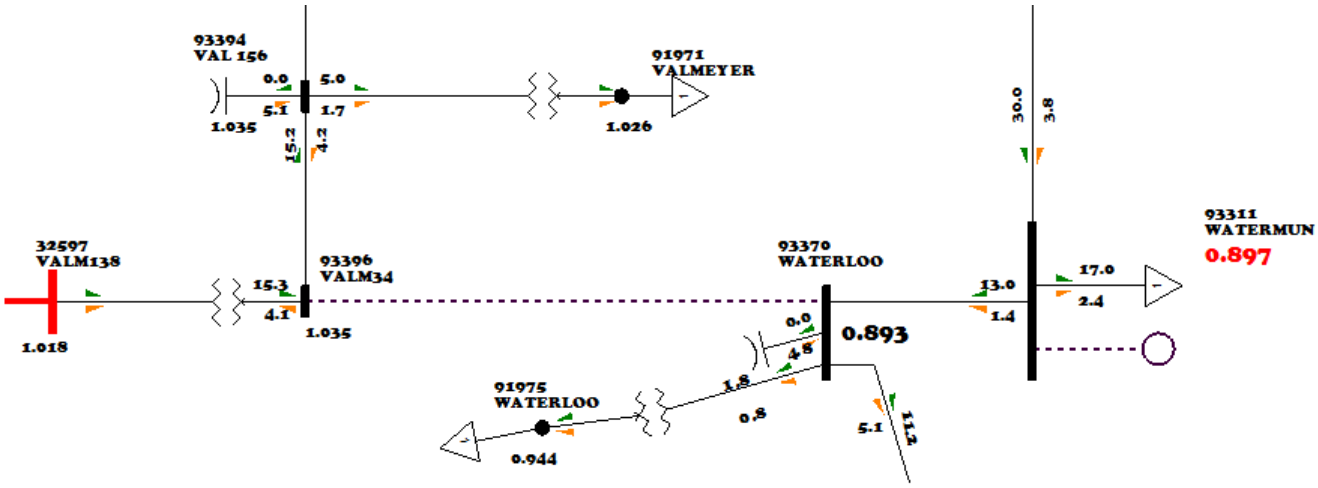

Figure 2 – Base Year Worst Case Contingency Condition with 5MW of load shedding at Waterloo Municipal

5 Solution Alternatives

Alternatives were considered that solved loading and voltage issues for normal loading and contingency cases, at minimum through year 2023. A description of each alternative follows. In addition it was desired to quantify the amount of system capacity added with each solution. This is quantified in terms of how much added load can be accommodated in the Waterloo Municipal system and the rest of the area combined. For years beyond the forecast data a 1.2% annual growth is assumed for the Ameren and REA loads and 2% is assumed for Waterloo Muni. In addition the year which the alternatives fail to yield satisfactory results is identified.

5.1 Alternative 1 – Bring a second 138kV supply from the Cahokia-Buck Knob line into Valmeyer 138 and install an additional transformer and a high side ring bus; construct a 34.5kV line between Fountain and Waterloo

A second 138kV supply is brought into Valmeyer 138 and a second138/34.5kV 50MVA LTC transformer is installed there. Additional 138kV breakers are installed to form a high side ring bus and new 34.5kV breakers are installed to form a low side automatic transfer scheme. The new line from Fountain to Waterloo includes switching stations at each terminal point to tie into the existing 34.5kV supplies. Figure 3 shows a one line diagram for this alternative.

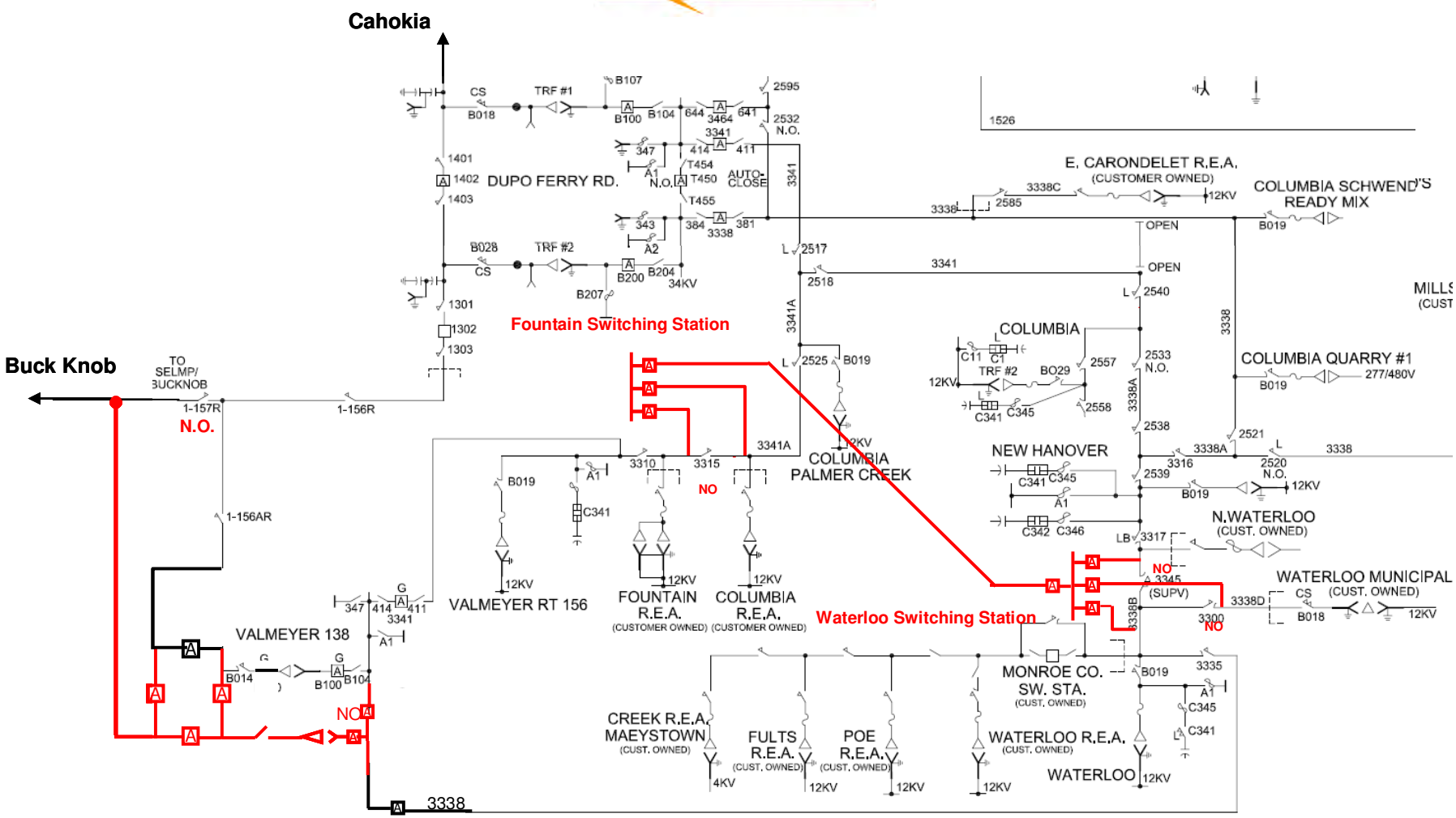

Figure 3 – Alternative 1 System Additions

Alternative 1 - Requirements and Cost

The following equipment will be required for this alternative:

Substations and switchyards:

Additional 138/34.5kV transformer with associated breakers at Valmeyer 138–

- 50 MVA transformer with LTC
- 2-34.5kV breakers; 1-transformer breaker, 1-bus tie breaker
- Install three additional 138kV breakers to form ring bus along with existing 138kV high side breaker at Valmeyer 138

34.5kV switchyards -

- Construct switchyards tying all 34.5kV supplies together in Fountain and Waterloo
    - Fountain station 3-34.5kV breakers
    - Waterloo station 4-34.5kV breakers

Transmission line work:

Additional 138kV supply -

- Construct approximately 2.5 miles of 138kV transmission line; tapped from the existing Cahokia-Buck Knob 138kV supply into Valmeyer

Subtransmission line work:

Additional 34.5kV line -

- Construct approximately 6 miles of 34.5kV line from Fountain to Waterloo
- Construct approximately 2 miles of double circuit 34.5kV line from new Fountain switching station to Line 3341A

Cost Summary

Valmeyer 138 substation upgrades and related equipment –	$6,200,000
138kV tap and supply line –	$4,500,000
34.5kV lines – 6 mile line;	$2,800,000
2 mile double circuit line;	$600,000
Waterloo switchyard –	$2,500,000
Fountain switchyard -	$2,000,000
Total cost for Alternative 1 -	**$18,600,000**

Normal Loading and Contingency Analysis Results

This alternative meets all planning criteria within the 15 year planning horizon and beyond. It provides sufficient capacity to serve the area thru year 2024. Beyond that year the limiting factor becomes voltage below 0.9 per unit at Waterloo Muni, Ameren Waterloo and Monroe County Switching station upon loss of the existing 34.5kV supply line 3338 from Valmeyer to Waterloo during peak load conditions.

Additional load serving capability for alternative 1

- Total additional load serving capability provided for the study area 30.6MW
- Additional load assumed serve by Waterloo Municipal 12.9MW
- Additional Load served in the remainder of the study area 17.7MW
- Year additional system reinforcements required 2024

5.2 Alternative 2 – Tap the Cahokia-Meramec 1, 138kV line with a three breaker switching station; Build a 138kV line into the Fountain area and construct a new 138/34.5kV substation in Fountain; build a 34.5kV line between Fountain and Waterloo and construct switching station at the Waterloo terminal

For this alternative a 138kV transmission line is built into the Fountain area and a new 138/34.5kV substation is constructed there. A 34.5kV line is built between that location and Waterloo along with a switching station at Waterloo to be able to tie this new line into the existing subtransmission system. Figure 4 shows a one line with the system additions required for this alternative.

Alternative 2a - a variation of this alternative is to construct the new Fountain substation in the same yard as the 138kV breaker additions where the Cahokia-Meramec 1 transmission line is tapped. This eliminates the need for new ROW for 138kV transmission and extends the 34.5kV line from the new station to Waterloo by three miles.

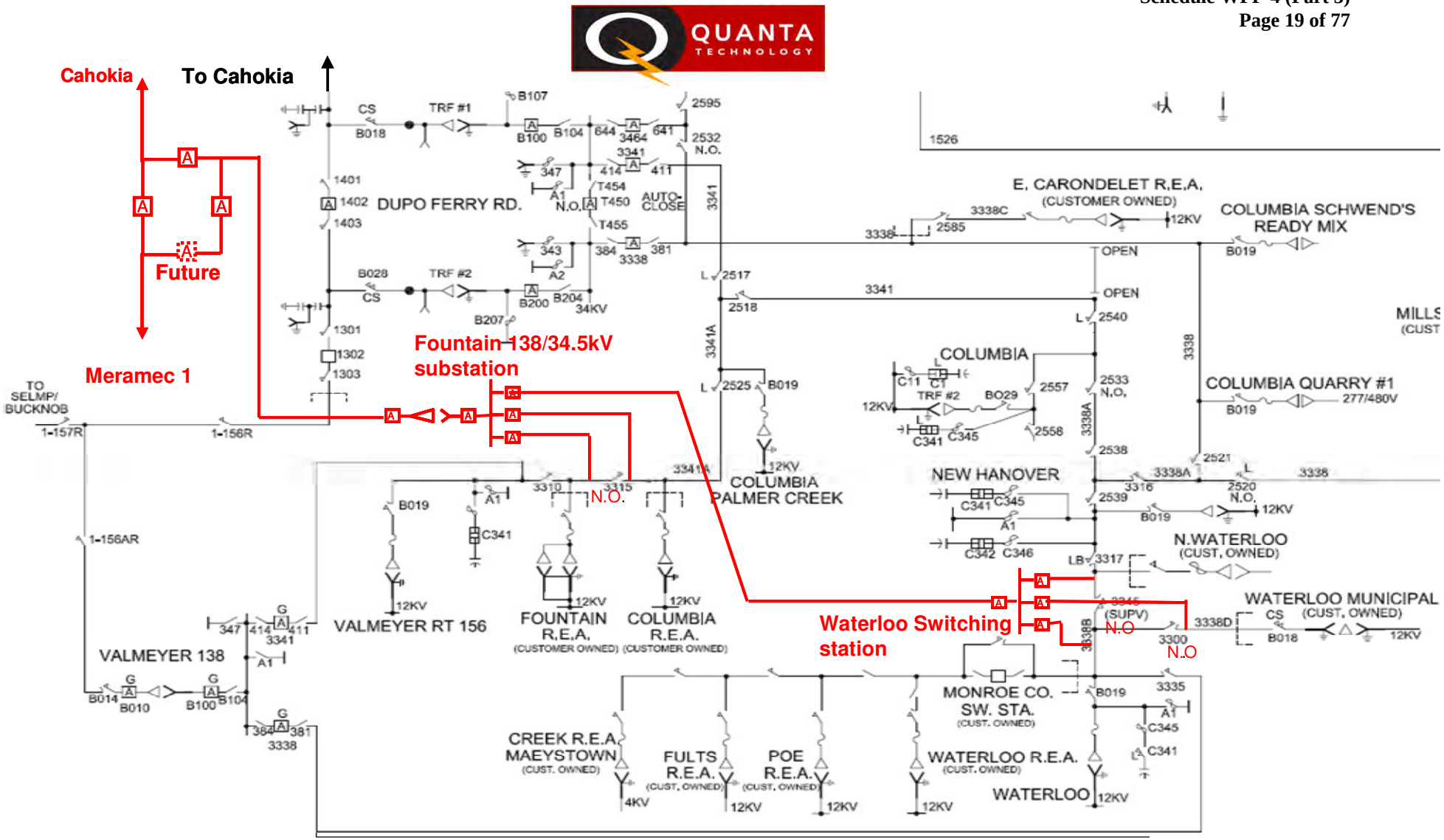

Figure 4 – Alternative 2 and 2a System Additions

Alternatives 2 and 2a - Requirements and Cost

The following equipment will be required for these alternatives:

Substations and switchyards:

New Substation at Fountain–
- 50 MVA 138/34.5kV transformer with LTC
- 138kV high side breaker
  - Not needed for Alt. 2a
- 4-34.5kV breakers; 1-transformer breaker and 3 feeder breakers

Switchyards -
- Construct switchyard tying all 34.5kV supplies together in Waterloo
  - 4-34.5kV breakers

Subtransmission line work:

Additional 34.5kV line -
- Construct approximately 6 miles of 34.5kV line from new Fountain substation to Waterloo
  - 11 miles for alternative 2a
- Construct approximately 2 miles of 34.5kV line from the new substation to tie into existing line 3341
  - 1 mile for alternative 2a

Transmission work:

Additional 138kV supply -
- Tap the Cahokia-Meramec 1, 138kV line and construct a three breaker switching station
- Construct approximately 4.0 miles of 138kV transmission line from new switching station to the new Fountain substation site
  - Tap and switching station only for alternative 2a, no new 138kV line required

Cost Summary

Alternative 2 new Fountain substations –	$5,800,000
Alternative 2a new Fountain substation –	$6,800,000
Alternative 2 – 138kV tap, ring bus and 4 mile supply line;	$11,200,000
Alternative 2a, - 138kV tap and ring bus;	$4,000,000
Alternative 2, 34.5kV lines - 6 mile line;	$2,800,000
2 mile double circuit line	$600,000
Alternative 2a, 34.5kV lines - 11 mile line;	$4,400,000
1 mile line	$200.000
Waterloo switchyard –	$2,500,000

Total cost for Alternative 2 – **$22,900,000**

Total cost for Alternative 2a - **$17,900,000**

Normal Loading and Contingency Analysis Results

These alternatives meet all planning criteria within the 15 year planning horizon and beyond. They both provide sufficient capacity to serve the area thru year 2031. Beyond that year the limiting factor for both alternatives becomes voltage below 0.9 per unit at the Waterloo Muni, Ameren Waterloo and Monroe County switching station upon loss of the existing 34.5kV supply line 3338 from Valmeyer to Waterloo during peak load conditions.

Additional load serving capability for alternatives 2 and 2a

- Total additional load serving capability provided for the study area 43.4MW
- Additional load assumed serve by Waterloo Municipal 18.3MW
- Additional Load served in the remainder of the study area 25.1MW
- Year additional system reinforcements required 2031

5.3 Alternative 3 – Bring a second 138kV supply into Valmeyer 138, install additional transformer and high side ring bus; build a 34.5kV line from Valmeyer 138 to Waterloo

Under this option a second 138kV supply is brought into Valmeyer 138 and an additional 138/34.5kV transformer and associated breakers and equipment are added to that substation. On the high side additional 138kV breakers are installed to form a ring bus and on the low side additional 34.5kV breakers are installed to form an automatic low side scheme. A 34.5kV line is constructed from Valmeyer 138 to Waterloo and a switching station is constructed in Waterloo to tie the new line into the existing 34.5kV system at that point. Figure 5 shows a one line with the system additions required for this alternative.

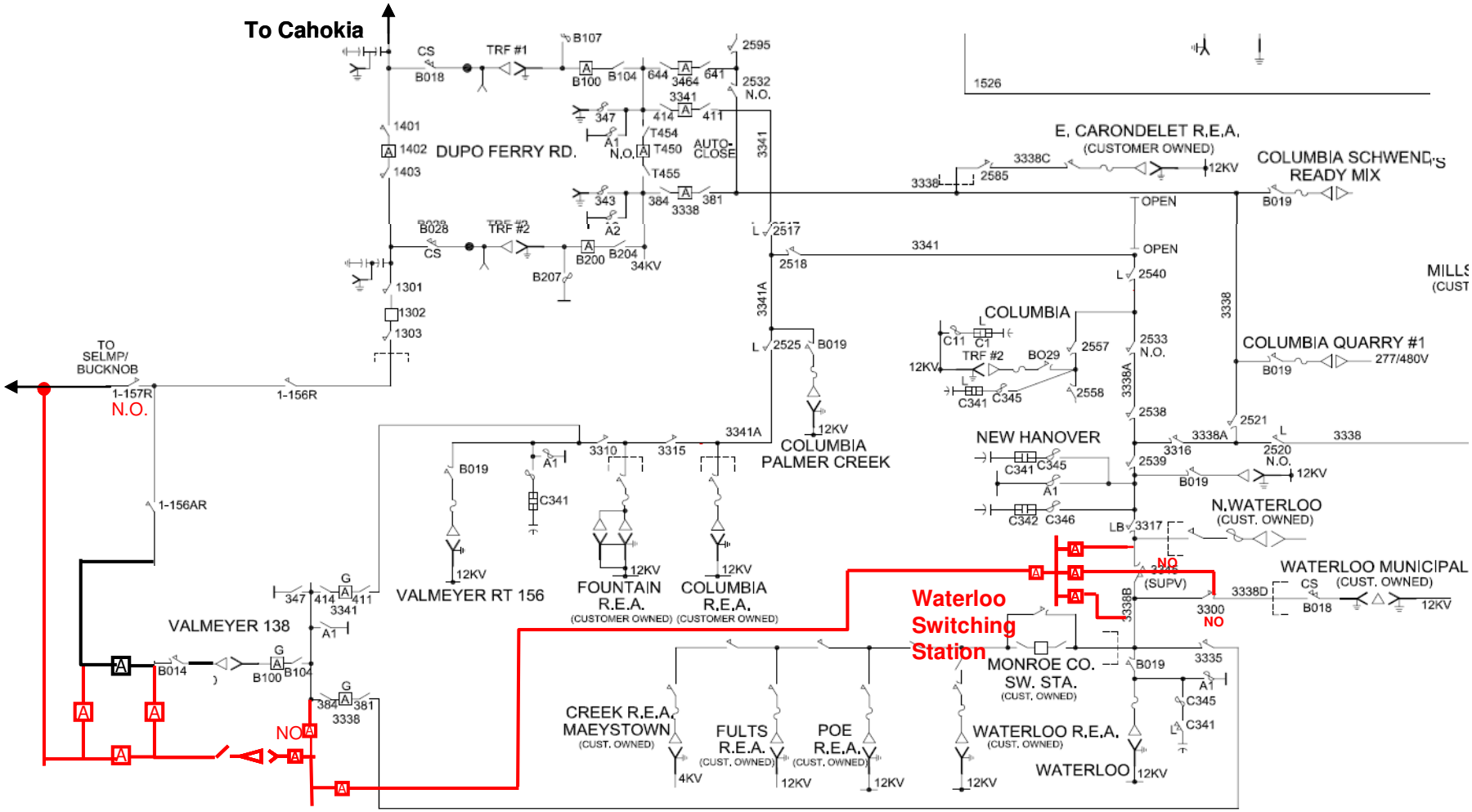

Figure 5 – Alternative 3 System Additions

Alternative 3 - Requirements and Cost

The following equipment will be required for this alternative:

Substations and switchyards:

Additional 138/34.5kV transformer with associated breakers at Valmeyer –

- 50 MVA 138/34.5kV transformer with LTC
- 3-34.5kV breakers; 1-transformer breaker, 1-bus tie breaker and 1-feeder breaker
- 3-additional 138kV high side breakers are installed to form a ring bus configuration at Valmeyer 138

34.5kV switchyards -

- Construct switchyard tying all 34.5kV supplies together in Waterloo
    - 4-34.5kV breakers

Subtransmission line work:

Additional 34.5kV line -

- Construct approximately 9 miles of double circuit 34.5kV line from Valmeyer substation to Waterloo (overbuild existing line 3338)

Transmission work:

Additional 138kV supply -

- Construct approximately 2.5 miles of 138kV transmission line; tapped from the existing Cahokia-Buck Knob 138kV supply into Valmeyer 138

Cost Summary

Valmeyer 138 Substation upgrades and equipment –	$6,300,000
138kV supply line –	$4,500,000
34.5kV line –	$5,400,000
Waterloo switchyard –	$2,500,000
Total cost for Alternative 3 -	**$18,700,000**

Normal Loading and Contingency Analysis Results

This alternative meets all planning criteria within the 15 year planning horizon and beyond. It provides sufficient capacity to serve the area thru year 2030. Beyond that year the limiting factor becomes voltage below 0.9 per unit at Waterloo Muni, Ameren Waterloo and Monroe County switching station upon loss of the of the existing 34.5kV supply line 3338 from Valmeyer to Waterloo during peak load conditions.

Additional load serving capability

- Total additional load serving capability provided for the study area 41.5MW
- Additional load assumed serve by Waterloo Municipal 17.5MW
- Additional Load served in the remainder of the study area 24MW
- Year additional system reinforcements required 2030

5.4 Alternative 4 – Construct 34.5kV line from Fountain to Waterloo – no new substation capacity

This is an interim alternative which installs a switchyard in the Fountain area along with a 34.5kV line between it and Waterloo. In addition a 34.5kV switchyard is constructed in Waterloo. This line and switchyards are required for other alternatives and it was desired to quantify the amount of additional load that can be served by constructing it alone. Figure 6 shows the one line diagram and related system changes required for this alternative.

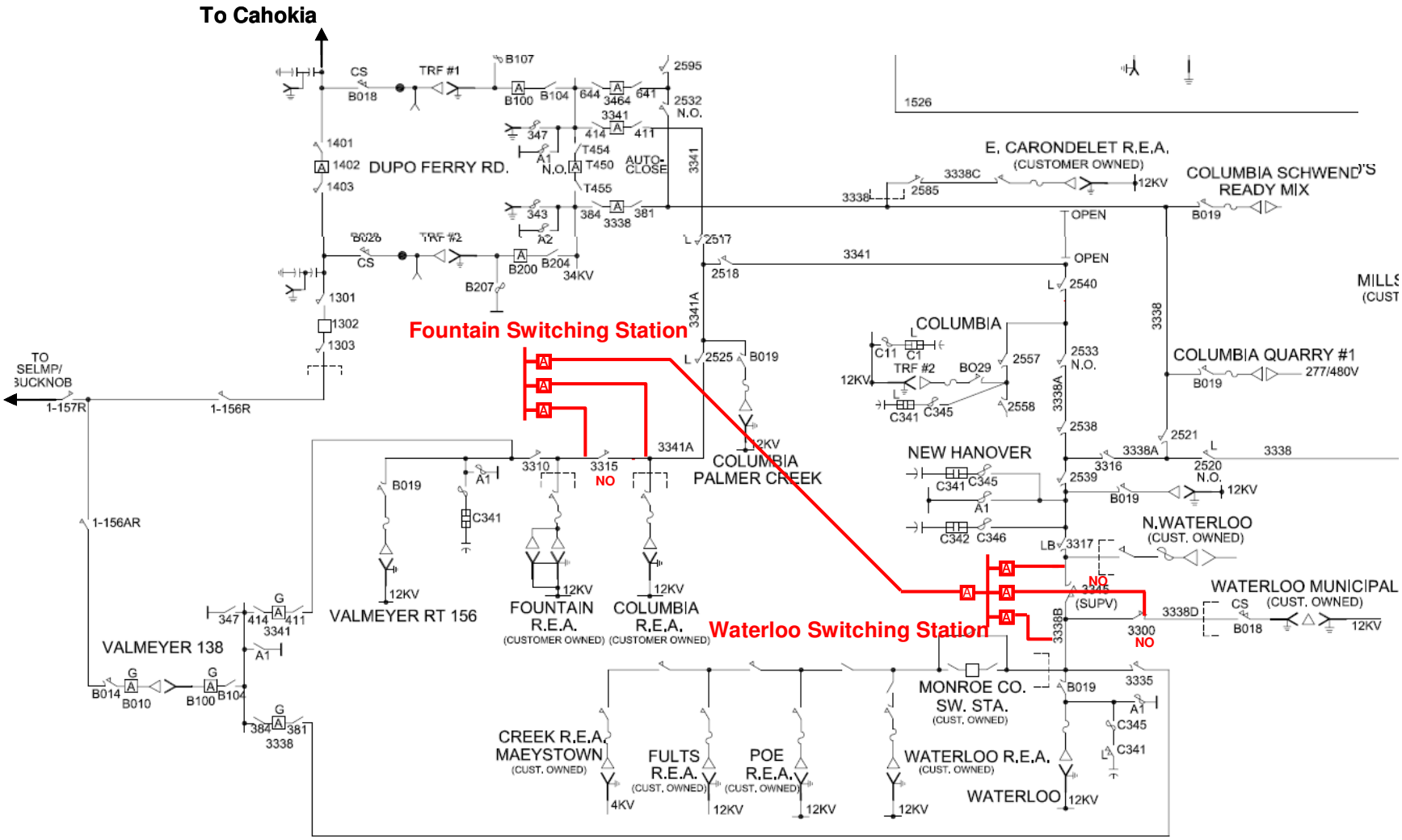

Figure 6 – Alternative 4 System Additions

Alternative 4 - Requirements and Cost

The following equipment will be required for this alternative:

Substations and switchyards:

34.5kV switchyards -

- Construct switchyards tying all 34.5kV supplies together in Fountain and Waterloo
    - Fountain station 3-34.5kV breakers
    - Waterloo station 4-34.5kV breakers

Subtransmission line work:

Additional 34.5kV line -

- Construct approximately 6miles of 34.5kV line from Fountain to Waterloo
- Construct approximately 2 miles of double circuit 34.5kV line from the Fountain switching station to line 3341A

Cost Summary

34.5kV line – 6 mile line;	$2,800,000
2 miles double circuit;	$600,000
Waterloo switchyard –	$2,500,000
Fountain switchyard -	$2,000,000
Total cost for Alternative 4 -	**$7,900,000**

Normal Loading and Contingency Analysis Results

This alternative does not meet all planning criteria within the 15 year planning horizon. As an interim step in providing long term solutions it provides sufficient capacity to serve the area thru year 2014. Beyond that year the most limiting factor becomes voltage below 0.9 per unit at Waterloo Muni, North Waterloo and Monroe County switching station upon loss of the 138kV supply into Valmeyer 138 or the 138/34.5kV transformer at Valmeyer 138 substation during peak load conditions.

Additional load serving capability for alternative 4

- Total additional load serving capability provided for the study area 13.1MW
- Additional load assumed serve by Waterloo Municipal 5.2MW
- Additional Load served in the remainder of the study area 7.9MW
- Year additional system reinforcements required 2014

5.5 Alternative 5 – Tap the Cahokia-Meramec 1, 138kV line with a three breaker switching station; Build a 138kV line into Fountain area and construct a new Fountain 138/69kV substation; build a 69kV line from the new substation to Waterloo; Replace the existing transformer at Valmeyer 138 with a 138/69kV transformer and convert a portion of the 34.5kV system to 69V; Build a 34.5kV line from Fountain to Waterloo to maintain 34.5kV loop in that area

For this alternative a new 138/69kV substation is constructed in Fountain, a 69kV line built from it to Waterloo and a portion of the existing 34.5kV system is converted to 69kV as shown in Figure 7. The existing 138/34.5kV transformer at Valmeyer 138 is replaced with a 138/69kV unit. The existing 34.5kV line 3338 from Valmeyer to Waterloo is built for 69kV and the Waterloo Municipal substation is insulated to 69kV and has a dual winding transformer already installed to accommodate the 69kV supplies. All transformers supplied by this line will be converted to 69kV high side with the exception of Ameren Waterloo substation. This substation will continue to be served by the 34.5kV system.

In order to maintain the remaining 34.5kV system reliability at its current level it will also be necessary construct a 34.5kV tie line between Fountain and North Waterloo substations. Figure 7 shows the one line diagram and related system changes required for this alternative.

Alternative 5a - a variation of this alternative is to construct the new Fountain substation in the same yard as the 138kV breaker additions where the Cahokia-Meramec 1 transmission line is tapped. This eliminates the need for new ROW for 138kV transmission and extends the 69kV line from the new station to Waterloo by three miles.

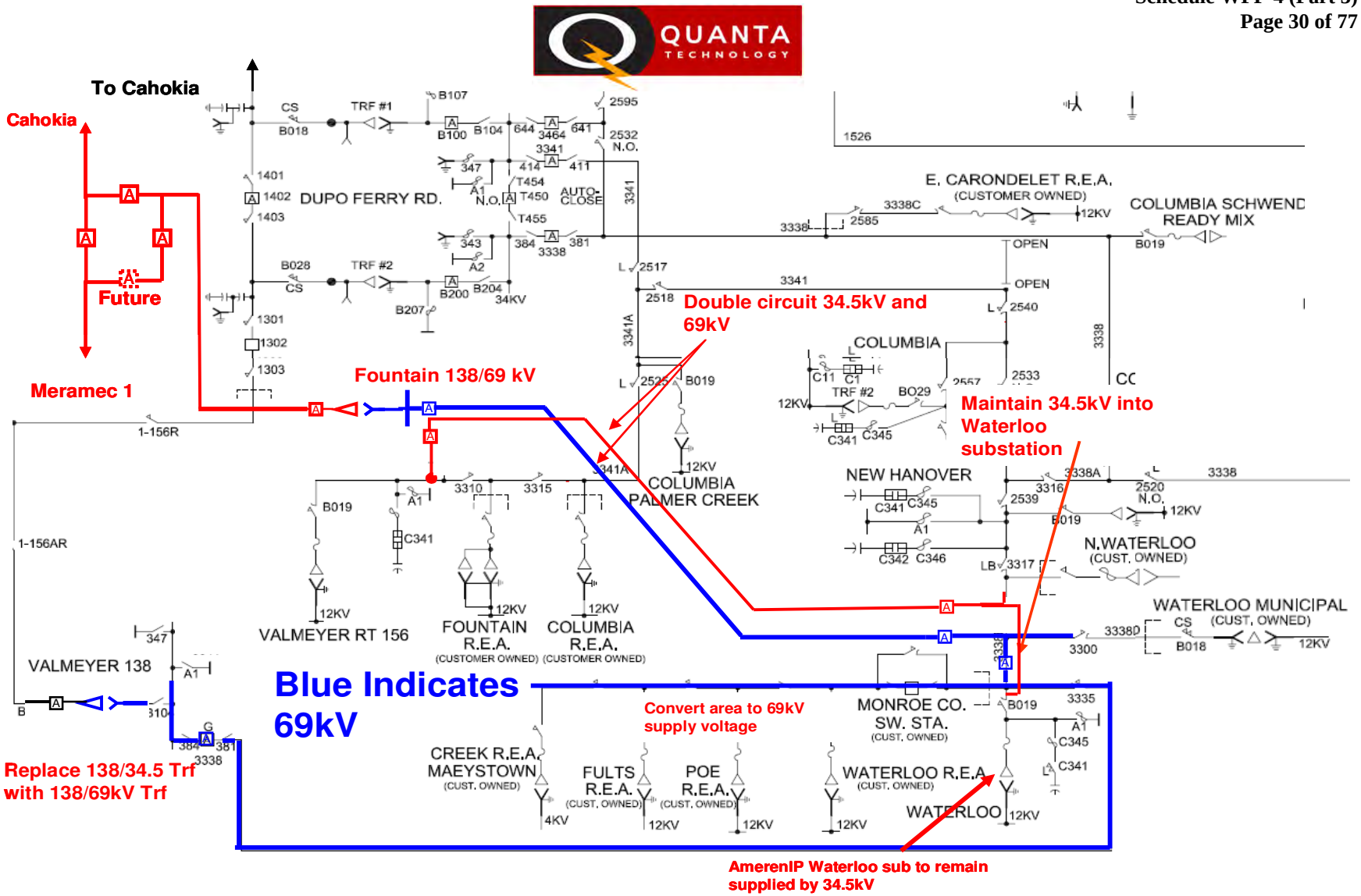

Figure 7 – Alternatives 5 and 5a System Additions

Alternative 5 - Requirements and Cost

The following equipment will be required for this alternative:

Substations and switchyards:

Construct 138/69kV substation at Fountain –
- 50 MVA transformer w/LTC
- 1-69 kV feeder breaker
- 1-138kV high side breaker
    - Not required for alternative 5a
- 1-34.5kV breaker

Construct switching station in Waterloo –
- 1-34.5kV breaker
- 2-69kV breakers

Other major additions -
- Replace Valmeyer 138 substation transformer with a 138/69kV 50MVA LTC unit.

Transmission work:

Additional 138kV supply -
- Tap the Cahokia-Meramec 1, 138kV line and construct a three breaker switching station
- Construct approximately 4 miles of 138kV transmission line from new switching station to the new Fountain substation site
    - Tap and switching station only for alternative 5a, no new 138kV line required

Subtransmission line work:

Additional 69kV line –
- Construct approximately 7miles of 69kV line from Fountain to Waterloo
    - 11 miles for alternative 5a

Additional 34.5kV line -
- Construct approximately 7miles of 34.5kV line from Fountain to Waterloo
- Double circuit 34.5kV and 69kV for 1.5 mile to maintain 34.5kV feed into Ameren Waterloo substation

Cost Summary

Valmeyer 138 transformer replacement	$3,500,000
Waterloo switching station	$1,800,000
Alternative 5 new Fountain substation –	$5,100,000
Alternative 5a new Fountain substation –	$6,100,000
Alternative 5, 138kV tap, ring bus and supply line –	$11,200,000

Alternative 5a, 138kV tap and ring bus -	$4,000,000
Alternative 5, double circuit 69kV and 34.5kV line –	$4,000,000
Alternative 5a, double circuit 69kV and 34.5kV line –	$6,200,000
34.5kV feed to Waterloo substation -	$400,000
Total cost for Alternative 5 –	**$26,000,000**
Total cost for Alternative 5a –	**$22,000,000**

Normal Loading and Contingency Analysis Results

These alternatives meet all planning criteria within the 15 year planning horizon and beyond. They both provide sufficient capacity to serve the area thru year 2031. Beyond that year the limiting factor for both alternatives becomes voltage below 0.9 per unit at Waterloo Muni, Ameren Waterloo and Monroe County switching station upon loss of the 69kV line between Valmeyer and Waterloo during peak load conditions.

Additional load serving capability for alternatives 5 and 5a

- Total additional load serving capability provided for the study area 43.4MW
- Additional load assumed serve by Waterloo Municipal 18.3MW
- Additional Load served in the remainder of the study area 25.1MW
- Year additional system reinforcements required 2031

Note on impact of additional Var support

For these options it was desired to see the impact in terms of additional load serving capability for Waterloo Municipal that can be realized by adding reactive support in the Waterloo area. For study purposes a 14.4MVar capacitor bank was added at the Waterloo Switching station location. This resulted in a 5.9% increase in voltage at the most limiting location. Under this condition the load serving capability for Waterloo Municipal is increased by 5.1MW to 23.4MW.

5.6 Alternative 6 – Add 138/69kV Transformer at Valmeyer; Tap the Cahokia-Meramec 1, 138kV line with a three breaker switching station; Build 138kV transmission from the new switching station into Fountain and install 138/69kV Substation; Build a 69kV line from the new substation to Waterloo and convert a portion of the 34.5kV system to 69kV; Build 34.5kV line from Valmeyer 138 to Waterloo to maintain 34.5kV loop in that area

This alternative is similar to the Alternative 5 – 69kV option with the exception being the existing 138/34.5kV system in Valmeyer substation is kept intact. In this case the 34.5kV line built to maintain the 34.5kV loop in the area is built from Valmeyer 138 to Waterloo. A switching station is built in Waterloo to tie the 69kV supplies into Waterloo Muni and to tie the new 34.5kV line into the existing subtransmission system. Figure 8 shows a one line diagram with the required system changes for this alternative.

Alternative 6a - a variation of this alternative is to construct the new Fountain substation in the same yard as the 138kV breaker additions where the Cahokia-Meramec1 transmission line is tapped. This eliminates the need for new ROW for 138kV transmission and extends the 69kV line from the new station to Waterloo by three miles.

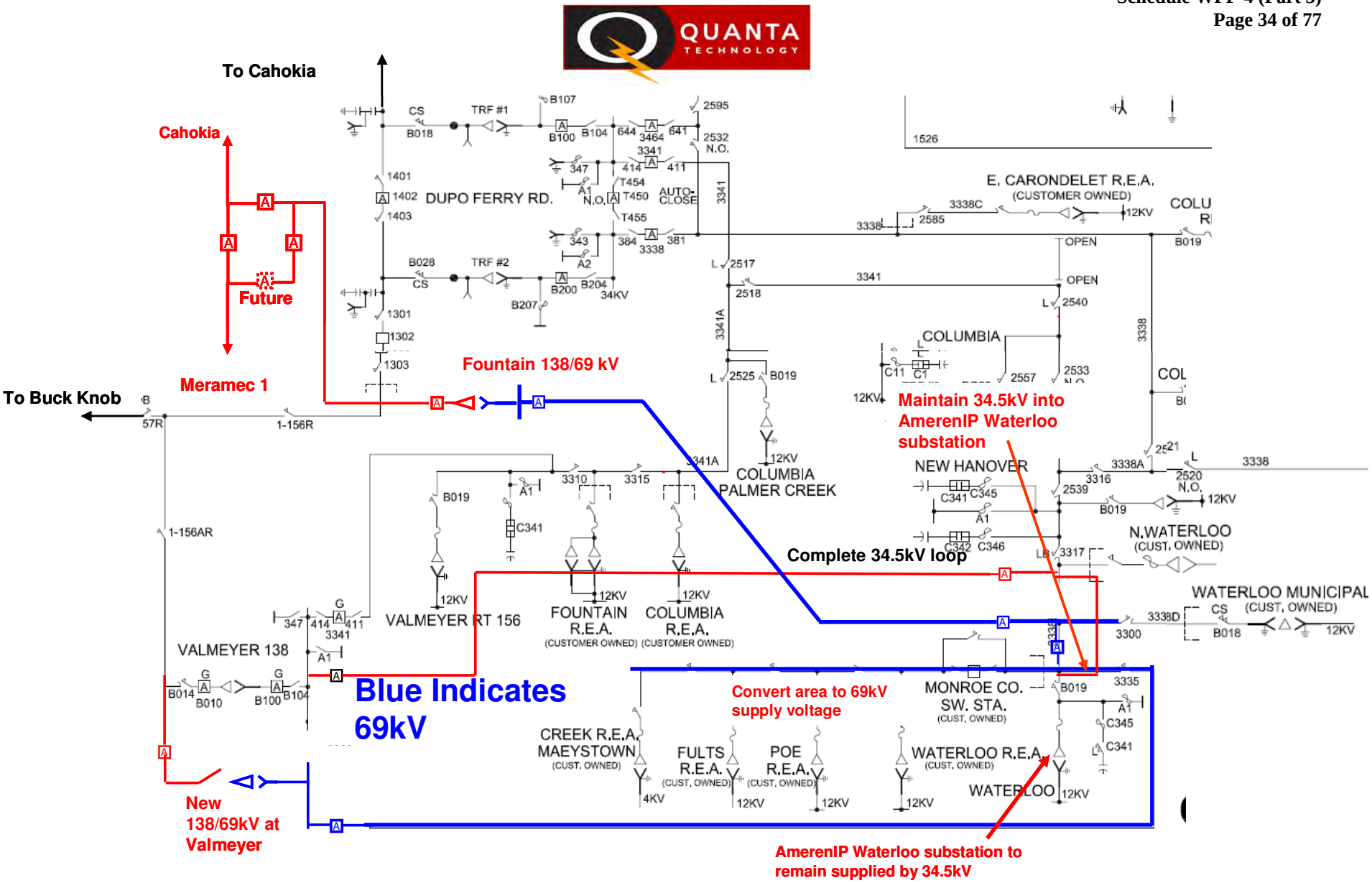

Figure 8 – Alternatives 6 and 6a System Additions

Alternative 6 - Requirements and Cost

The following equipment will be required for this alternative:

Substations and switchyards:

Construct 138/69kV substation at Fountain –
- 50 MVA transformer w/LTC
- 1-69 kV feeder breaker
- 1-138kV high side breaker
    - Not required for alternative 6a

Install 138/69kV transformer and breakers in Valmeyer –
- 50 MVA transformer
- 2-69kV breakers; 1-transformer breaker and 1-feeder breaker

Transmission work:

Additional 138kV supplies -
- Tap the Cahokia-Meramec 1, 138kV line and construct a three breaker switching station
- Construct approximately 4 miles of 138kV transmission line from new switching station to the new Fountain substation site
    - Tap and switching station only for alternative 6a, no new 138kV line required

Subtransmission line work:

Additional 69kV line –
- Construct approximately 6 miles of 69kV line from Fountain to Waterloo
    - 11 miles for alternative 6a
- 69kV breaker at Waterloo terminal

Additional 34.5kV line -
- Double circuit Construct approximately 9 miles of existing line L3338 from Valmeyer to Waterloo switching station
- Double circuit 34.5kV and 69kV for 1.5 mile to maintain 34.5kV feed into Ameren Waterloo substation

Other major additions –
- Additional 69kV breaker at Waterloo terminal of Valmeyer – Waterloo 69kV line (presently operated at 34.5kV).

Cost Summary

Valmeyer 138 additions and modifications	$5,100,000
Alternative 6 new Fountain substation –	$5,100,000
Alternative 6a new Fountain substation –	$6,100,000
Alternative 6, 138kV tap and supply lines –	$11,200,000
Alternative 6a, 138kV tap and supply lines –	$4,000,000
Alternative 6, 69kV line –	$2,800,000
Alternative 6a, 69kV line –	$5,000,000
34.5kV line –	$5,400,000
Other equipment -	$1,800,000
Total cost for Alternative 6 –	**$31,400,000**
Total cost for Alternative 6a –	**$27,400,000**

Normal Loading and Contingency Analysis Results

These alternatives meet all planning criteria within the 15 year planning horizon and beyond. They both provide sufficient capacity to serve the area thru year 2031. Beyond that year the limiting factor for each alternative becomes voltage below 0.9 per unit at Waterloo Muni, Ameren Waterloo and Monroe County switching station upon loss of the 69kV line between Valmeyer and Waterloo during peak load conditions.

Additional load serving capability for alternatives 6 and 6a

- Total additional load serving capability provided for the study area 43.4MW
- Additional load assumed serve by Waterloo Municipal 18.3MW
- Additional Load served in the remainder of the study area 25.1MW
- Year additional system reinforcements required 2031

Note on impact of additional Var support

For these options it was desired to see the impact in terms of additional load serving capability for Waterloo Municipal that can be realized by adding reactive support in the Waterloo area. For study purposes a 14.4MVar capacitor bank was added at the Waterloo Switching station location. This resulted in a 5.9% increase in voltage at the most limiting location. Under this condition the load serving capability for Waterloo Municipal is increased by 5.1MW to 23.4MW.

5.7 Alternative 7 – Tap the Cahokia-Meramec 1, 138kV line with a three breaker switching station; Build a 138kV transmission line from the new switching station into Waterloo and construct a new 138/34.5kV substation in Waterloo

5.8 This alternative involves building a new 138kV supply from the Cahokia-Meramec 1 138kV transmission line to Waterloo and constructing a new 138/34.5kV bulk supply substation in Waterloo. The 34.5kV provided by this new substation will tie into the existing subtransmission lines currently serving the area. This will also require a 138kV ring bus at the Cahokia-Meramec tap location.

Figure 9 shows the one line diagram and system requirements for this alternative.

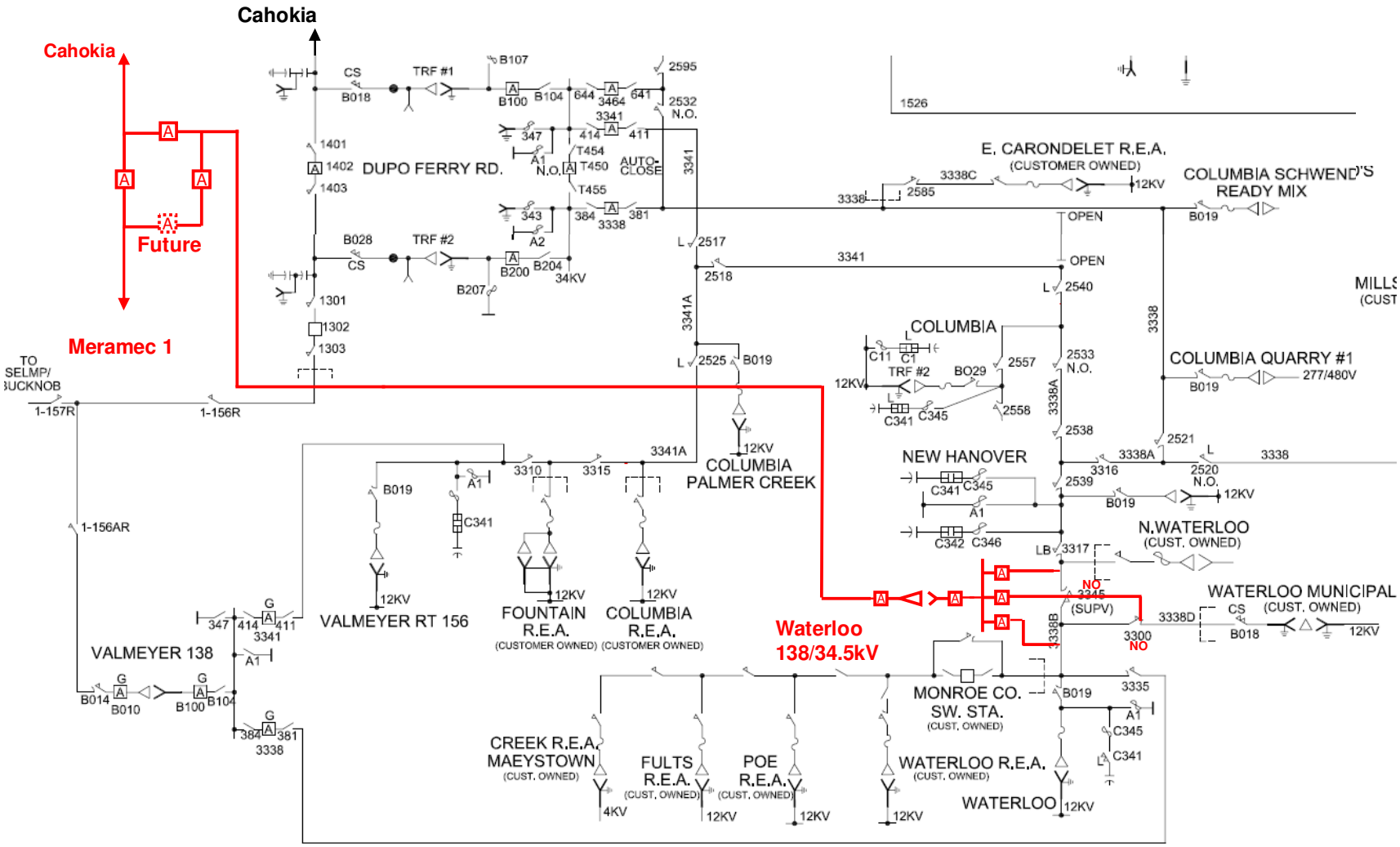

Figure 9 – Alternative 7 System Additions

Alternative 7 - Requirements and Cost

The following equipment will be required for this alternative:

Substations and switchyards:

Construct 138/34.5kV bulk supply substation at Waterloo –
- 138/34.5kV, 50 MVA LTC transformer
- 4-34.5 kV breakers; 1-transformer breaker and 3-feeder breakers
- 1-138kV high side breaker

Transmission work:

Additional 138kV supply -
- Tap Cahokia-Meramec 1, 138kV line and install three breaker switching station
- Construct approximately 11 miles of 138kV transmission line from the switching station to the Waterloo substation site

Cost Summary

Substation related equipment –	$5,800,000
138kV tap, ring bus and supply line –	$23,800,000
Total cost for Alternative 7 -	**$29,600,000**

Normal Loading and Contingency Analysis Results

This alternative meets all planning criteria within the 15 year planning horizon and beyond. It provides sufficient capacity to serve the area thru year 2032. Beyond that year the limiting factor becomes voltage below 0.9 per unit at Waterloo Muni, Ameren Waterloo and Monroe County switching station upon loss of the new 138kV supply to Waterloo during peak load conditions.

Additional load serving capability for alternative 7

- Total additional load serving capability provided for the study area 45.2MW
- Additional load assumed serve by Waterloo Municipal 19.1MW
- Additional Load served in the remainder of the study area 26.1MW
- Year additional system reinforcements required 2032

6 Conclusions and Recommendations

A summary of the study results and costs for each alternative follows. In addition to the analytical results there are advantages and disadvantages for each alternative. These are listed in section 6.2, Table 2 and are also considered in the making the final recommendation. An additional consideration is how the alternatives fit within long range horizon plans for conversion of the subtransmission system in the area to 69kV.

6.1 Summary of Alternatives

Alternative	Total Additional Load Serving Capability Provided for Study Area (MW)	Additional Load Assumed Served by Waterloo Municipal (MW)	Additional Load Served in the Remainder of Study Area (MW)	Year Additional System Reinforcement Required	Estimated Cost
1	30.6	12.9	17.7	2024	$18,600,000
2	43.4	18.3	25.1	2031	$22,900,000
2a	43.4	18.3	25.1	2031	$17,900,000
3	41.5	17.5	24	2030	$18,700,000
4	13.1	5.2	7.9	2014	$7,900,000
5	43.4	18.3	25.1	2031	$26,000,000
5a	43.4	18.3	25.1	2031	$22,000,000
6	43.4	18.3	25.1	2031	$31,400,000
6a	43.4	18.3	25.1	2031	$27,400,000
7	45.2	19.1	26.1	2032	$29,600,000

Table 1 – Summary of Alternatives

6.2 Alternative Pros and Cons

Alternatives	Pros	Cons
1. 2nd 34KV Bulk sub at Valmeyer. +Fountain-Waterloo 34KV line	- Maintains 34KV network - Waterloo Muni on Firm Bus - facilitates long range 69kV plans	- ICC certificate required - Build another 138 line into Valmeyer
2. 34KV Bulk sub at Fountain. +Fountain-Waterloo 34KV line	- Maintains 34KV network - Waterloo Muni on Firm Bus	- ICC certificate required - 138KV ring bus in flood plain
2a. Same as Alt. 2, except 34KV Bulk sub at 138KV Tap	- ICC Certificate NOT required - Least cost - Multiple 34KV sources/lines	- Bulk supply sub & 138KV ring bus in flood plain
3. 2nd 34KV Bulk Trf at Valmeyer. +Double-ckt Valmeyer-Waterloo line.	- Maintains 34KV network - Waterloo Muni on Firm Bus	- ICC certificate required - Double-circuit Valmeyer-Waterloo line
4. Fountain-Waterloo 34KV line only.	- Interim plan - Meets the needs for next few years at minimal cost	- Limited capacity gained
5. 69KV Bulk Sub at Fountain. +Replace Valmeyer w/69KV Bulk. +34&69KV Fountain-Waterloo line	- Potential for more capacity	- ICC Certificate required - Valmeyer sub on radial line - 138KV ring bus in flood plain
5a. Same as Alt. 5 except 69KV Bulk Sub at 138 KV tap.	- Potential for more capacity - ICC certificate NOT required	- Bulk supply sub & 138KV ring bus in flood plain - Valmeyer on radial line
6. 69KV Bulk Sub at Fountain. +Add 69KV Bulk at Valmeyer +Fountain-Waterloo 69KV line +34&69KV Valmeyer-Waterloo line	- Potential for more capacity - Maintains 34KV network	- ICC Certificate required - 138KV ring bus in flood plain - Highest cost
6a. Same as Alt. 6, except 69KV Bulk Sub at 138KV tap.	- Potential for more capacity - Maintains 34KV network - ICC certificate NOT required	- Bulk supply sub & 138KV ring bus in flood plain - Valmeyer sub on radial line
7. 138KV all the way to Waterloo. Bulk sub at Waterloo.	- Potential for significant additional capacity if 2nd 138KV line is built	- ICC Certificate required - High cost - By itself, capacity gain is comparable to other alternatives.

Table 2 – Alternative Pros and Cons

6.3 Recommendations

The preferred and recommended plan is Alternative 1, which involves expansion of the 34 kV system and the bulk supply at Valmeyer Substation. Options that involve construction of a switching station or a bulk supply substation in the Mississippi River bottom area were avoided. These include alternatives 2, 2a, 5, 5a, 6, 6a, and 7. Alternative 4 is an interim option. So the final decision was between alternatives 1 and 3. The costs for these differ by only $100,000 so the decision was based on other factors. Alternative 1 allows for using alternative 4 as an interim solution thereby spreading out the cost of the project over a period of 5 years or more.

The recommended plan is to pursue construction of switching stations near Fountain and near Waterloo and a new 34.5 kV line from Fountain to Waterloo in the near term (alternative 4). The addition of a second 138/34 kV transformer at Valmeyer and second 138 kV supply to Valmeyer would then be pursued at a later date which will be dependent on the load growth in the area.

Facilities should be built to 69 kV specifications to facilitate future upgrade to 69 kV operation. The long range or horizon strategy would be to begin upgrading the system to 69 kV as needed to meet load growth by adding a 138/69 kV bulk supply transformer at Valmeyer and establishing a second bulk supply source into the area from the east.

Worst case contingency voltages and line loadings within the study area for Alternative 1 are shown in Appendix D.

Appendix A – Ameren Subtransmission Planning Criteria

1) Supply peak load under the following conditions and applicable thermal and voltage limits:
   a) Normal system (no element out of service) - normal limits
   b) Loss of a single subtransmission or transmission component, 1st contingency outage - emergency limits (Single components shall include single line, bulk transformer, transmission transformer, generating unit, or single element without fault. Single element without fault shall include breaker and capacitor bank. Bus outage not included.) Exception for load presently supplied by a radial line with no alternate supply available.

2) Supply 65% peak load under the following conditions: [facilitate 2 mo. fall & 2 mo. spring maintenance window]
   a) Bulk supply transformer and high probability 1st contingency outage (line or generator) - summer emergency limits
   b) Planned subtransmission bus outage - normal limits

3) Supply 20% peak load under the following conditions:
   a) Normal system conditions and all capacitors off line - maximum voltage limits

Steady State Voltage Criteria:
Comply with Illinois Administrative Code, Part 410 Standards of Service.
Monitor voltages relative to limits outlined below at the low voltage bus of the distribution and customer substations and at the customer delivery points:

	Per Unit of Nominal Voltage	
Location	Minimum	Maximum (1)
Distribution Sub ..... w/ LTC or 10% bus regulation	1.035	1.06
Distribution Sub..... w/ 10% feeder regulation	0.96	1.08
Distribution Sub..... w/ no feeder regulation	1.035	1.06
Customer Sub..... > 120 volts	0.90	1.08
Customers taking..... delivery at 138 kV 69 kV r 34 kV	0.90	1.08

Customers taking..... service at 120 volts	0.94	1.06

(1) The maximum continuous operating voltage used for sizing arrestors is 1.08 per unit.

- Voltages below/above the thresholds indicated for distribution substations should be investigated to ensure adequate voltage will be maintained on the distribution feeders.

In addition it is assumed that equipment overloads and voltage issues outside of the immediate study area that impact the results of this study are corrected during the horizon years.

Appendix B – Area Forecast

	20 Year Forecast (MW)										
	2008	2009	2010	2011	2012	2013	2014	2015	2016	2017	2018
Ameren Substations:											
New Hanover	5.52	5.62	5.72	5.82	5.92	6.02	6.12	6.23	6.34	6.45	6.56
Palmer Creek	11.46	12.24	13.73	14.52	14.63	14.73	14.83	14.93	15.04	15.14	15.25
Columbia	13.90	13.99	14.09	14.19	14.29	14.39	14.50	14.60	14.70	14.81	14.91
Valmeyer 156	5.54	5.63	5.73	5.83	5.93	6.03	6.13	6.23	6.34	6.45	6.56
Waterloo	1.98	2.03	2.08	2.14	2.19	2.24	2.30	2.36	2.42	2.48	2.54
REA Substations:											
Columbia	2.08	2.11	2.14	2.17	2.21	2.24	2.27	2.31	2.34	2.38	2.41
E. Carondolet	3.51	3.58	3.66	3.73	3.80	3.88	3.96	4.04	4.12	4.20	4.28
N. Waterloo	2.95	3.00	3.04	3.09	3.13	3.18	3.23	3.28	3.33	3.38	3.43
Fountain	1.04	1.04	1.04	1.04	1.04	1.04	1.04	1.04	1.04	1.04	1.04
Monroe County Switching Station	11.97	12.21	12.46	12.71	12.96	13.22	13.49	13.76	14.03	14.31	14.60
Other:											
Waterloo Muni	22.55	23.89	24.66	25.43	26.20	26.96	27.73	28.50	29.27	30.03	30.80
Columbia Quarry	1.21	1.21	1.21	1.21	1.21	1.21	1.21	1.21	1.21	1.21	1.21
Schwend's	0.07	0.07	0.07	0.07	0.07	0.07	0.07	0.07	0.07	0.07	0.07
Area Total	83.79	86.63	89.62	91.94	93.57	95.21	96.87	98.55	100.24	101.94	103.66

Table 3 – Base year and forecast thru 2018

	2019	2020	2021	2022	2023	2024	2025	2026	2027	2028
Ameren Substations:										
New Hanover	6.68	6.79	6.91	7.03	7.15	7.28	7.40	7.53	7.66	7.80
Palmer Creek	15.36	15.46	15.57	15.68	15.79	15.90	16.01	16.13	16.24	16.35
Columbia	15.02	15.13	15.23	15.34	15.45	15.56	15.67	15.78	15.89	16.00
Valmeyer 156	6.67	6.78	6.90	7.01	7.13	7.25	7.38	7.50	7.63	7.76
Waterloo	2.60	2.67	2.73	2.80	2.87	2.94	3.02	3.09	3.17	3.25
REA Substations:										
Columbia	2.45	2.49	2.52	2.56	2.60	2.64	2.68	2.72	2.76	2.80
E. Carondolet	4.37	4.46	4.54	4.64	4.73	4.82	4.92	5.02	5.12	5.22
N. Waterloo	3.48	3.53	3.58	3.64	3.69	3.75	3.80	3.86	3.92	3.98
Fountain	1.04	1.04	1.04	1.04	1.04	1.04	1.04	1.04	1.04	1.04
Monroe County Switching Station	14.89	15.19	15.49	15.80	16.11	16.44	16.77	17.10	17.44	17.79
Other:										
Waterloo Muni	31.57	32.34	33.11	33.87	34.64	35.41	36.18	36.94	37.71	38.48
Columbia Quarry	1.21	1.21	1.21	1.21	1.21	1.21	1.21	1.21	1.21	1.21
Schwend's	0.07	0.07	0.07	0.07	0.07	0.07	0.07	0.07	0.07	0.07
Area Total	105.39	107.14	108.91	110.69	112.49	114.31	116.14	117.99	119.86	121.75

Table 4 – Forecast for years 2019 - 2028

Appendix C – Alternative One Line Diagrams

The following pages contain one line diagrams for each alternative. These show system changes to the study area along with substation and switching station diagrams that pertain to each alternative.

Alternative general descriptions:

Alternative 1 – Bring a second 138kV supply into Valmeyer 138 and install an additional transformer and a high side ring bus; construct a 34.5kV line between Fountain and Waterloo

Alternative 2 – Build a 138kV line into the Fountain area and construct a new 138/34.5kV substation in Fountain; build a 34.5kV line between Fountain and Waterloo and construct switching station at the Waterloo

Alternative 3 – Bring a second 138kV supply into Valmeyer 138, install additional transformer and high side ring bus; build a 34.5kV line from Valmeyer 138 to Waterloo

Alternative 4 – Construct 34.5kV line from Fountain to Waterloo Main – no new substation capacity

Alternative 5 – Build a 138kV line into Fountain area and construct a new Fountain 138/69kV substation; build a 69kV line from the new substation to Waterloo; Replace the existing transformer at Valmeyer 138 with a 138/69kV transformer and convert a portion of the 34.5kV system to 69V; Build a 34.5kV line from Fountain to Waterloo to maintain 34.5kV loop in that area

Alternative 6 - Add 138/69kV Transformer at Valmeyer; Build 138kV transmission into Fountain and install 138/69kV Substation; Build a 69kV line from the new substation to Waterloo and convert a portion of the 34.5kV system to 69kV; Build 34.5kV line from Valmeyer 138 to Waterloo to maintain 34.5kV loop in that area

Alternative 7 – Build 138kV transmission line into Waterloo and construct a new 138/34.5kV substation in Waterloo

Existing Study Area

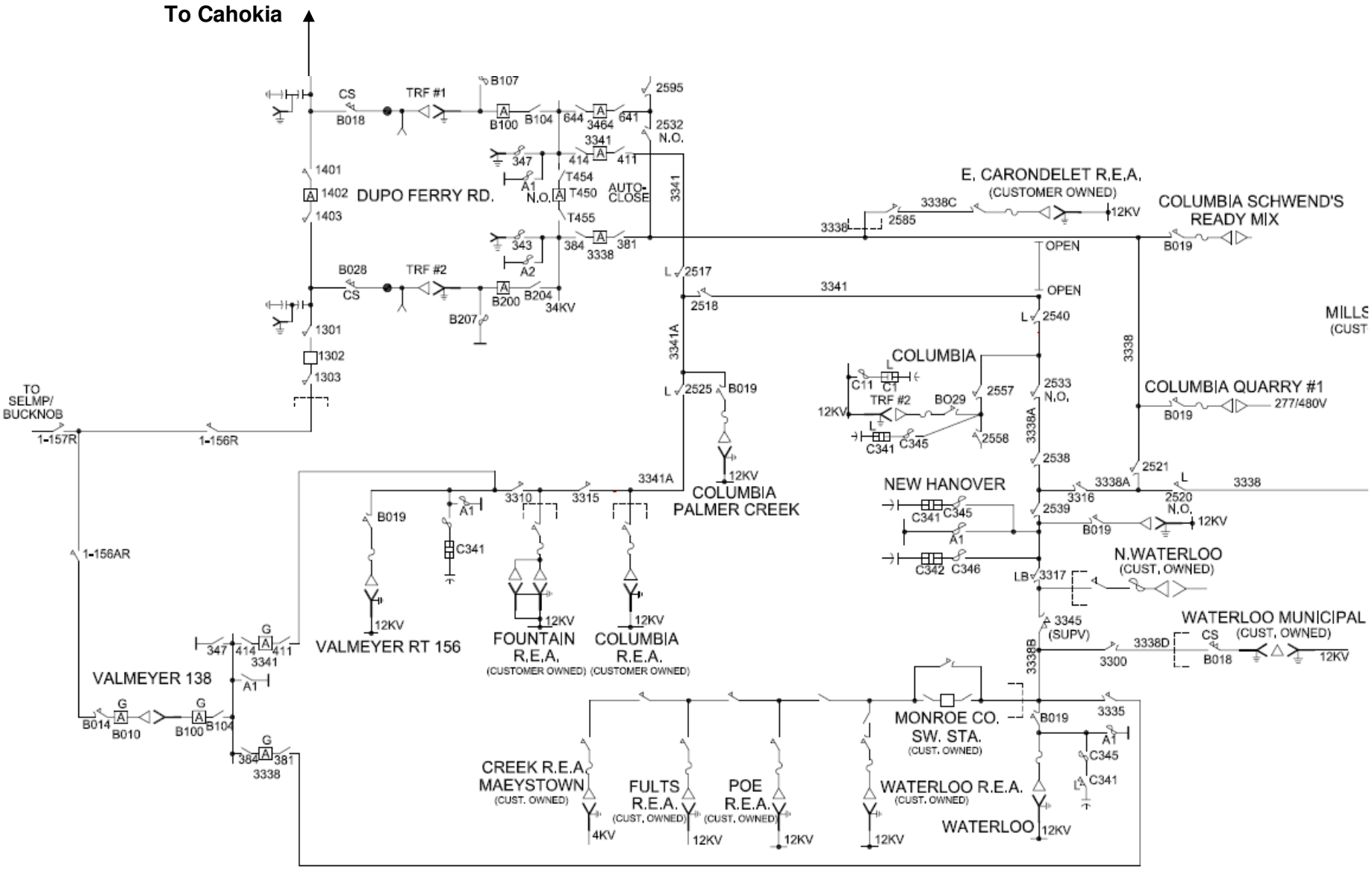

Alternative 1

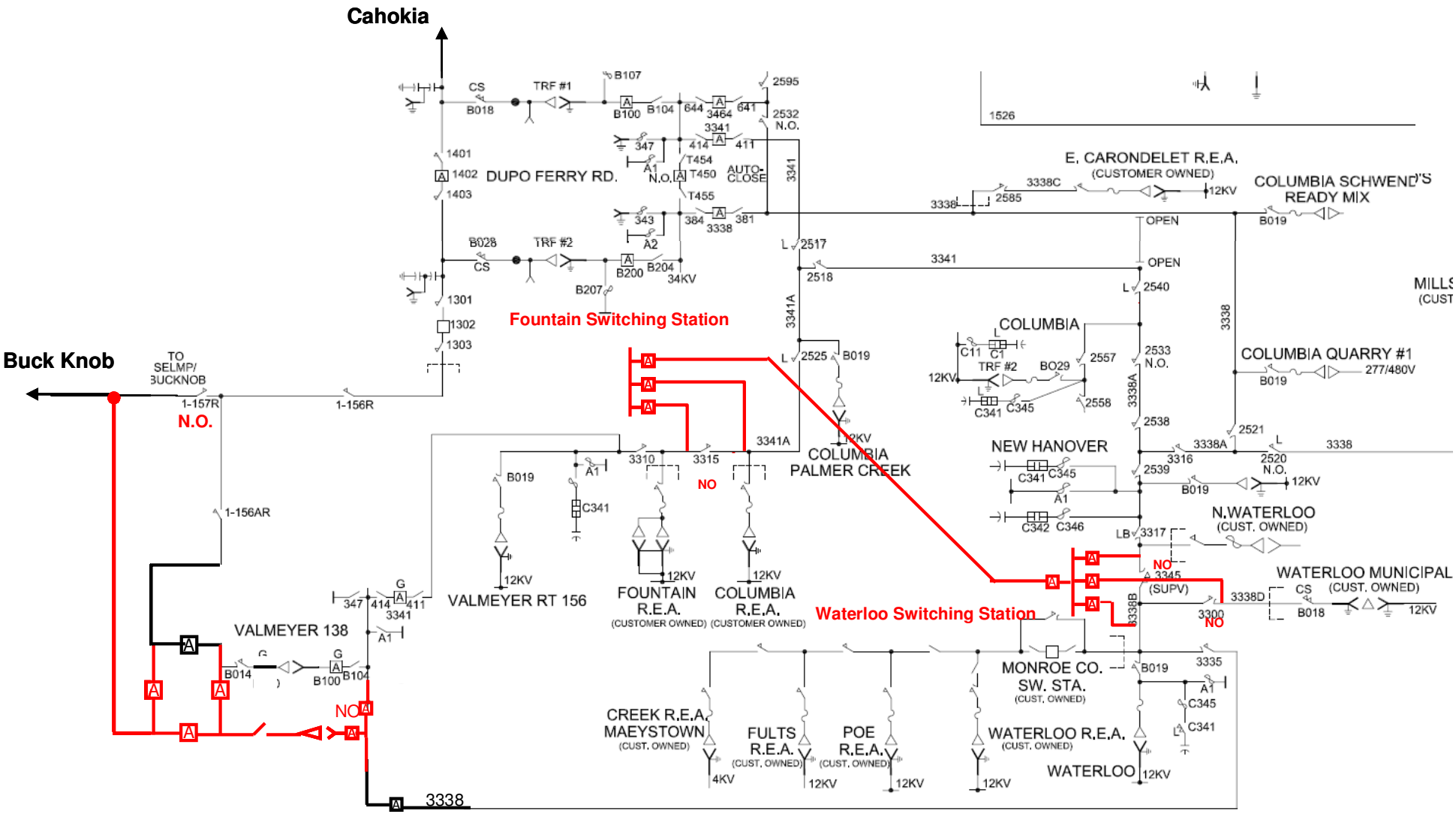

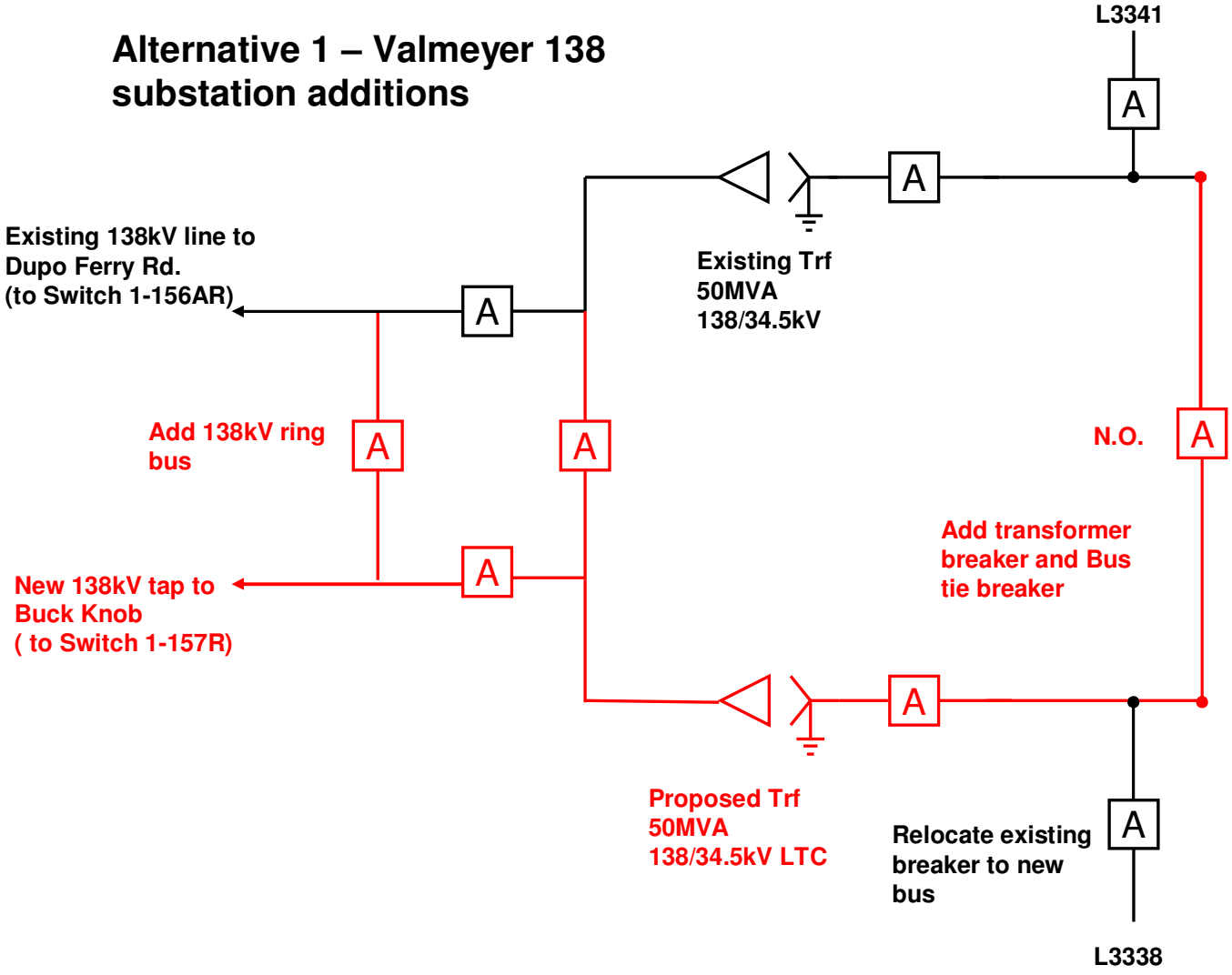
Alternative 1 – Valmeyer 138 substation additions
L3341
A
A
Existing 138kV line to Dupo Ferry Rd. (to Switch 1-156AR)
A
Existing Trf 50MVA 138/34.5kV
Add 138kV ring bus
A
A
N.O.
A
Add transformer breaker and Bus tie breaker
New 138kV tap to Buck Knob (to Switch 1-157R)
A
A
Proposed Trf 50MVA 138/34.5kV LTC
Relocate existing breaker to new bus
A
L3338

Alternative 1 – Proposed new Fountain switching station

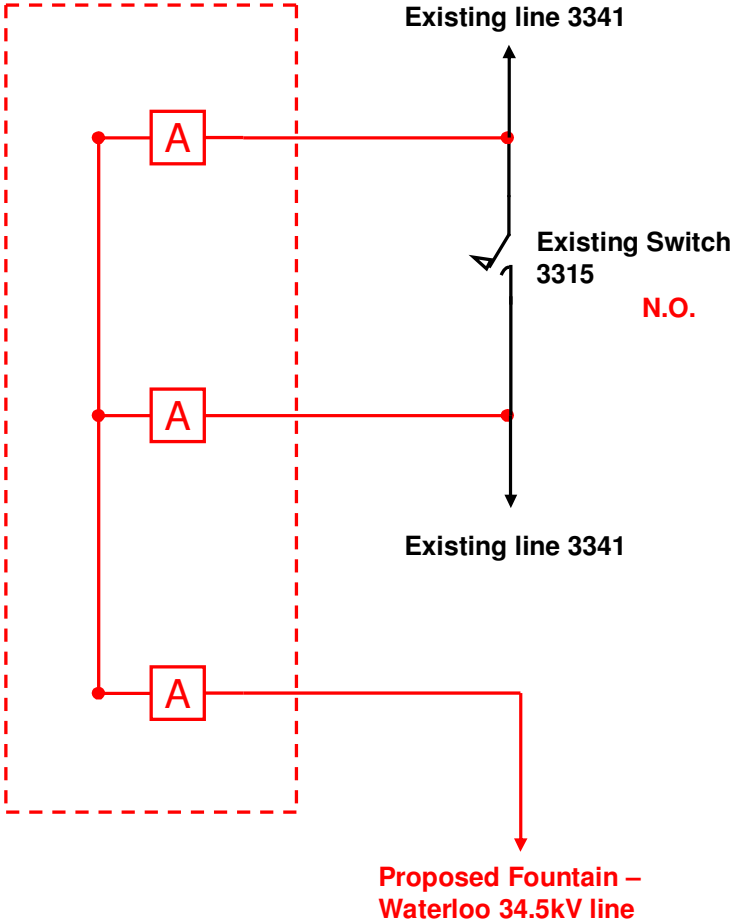

Alternative 1 - Proposed Waterloo Switching Station

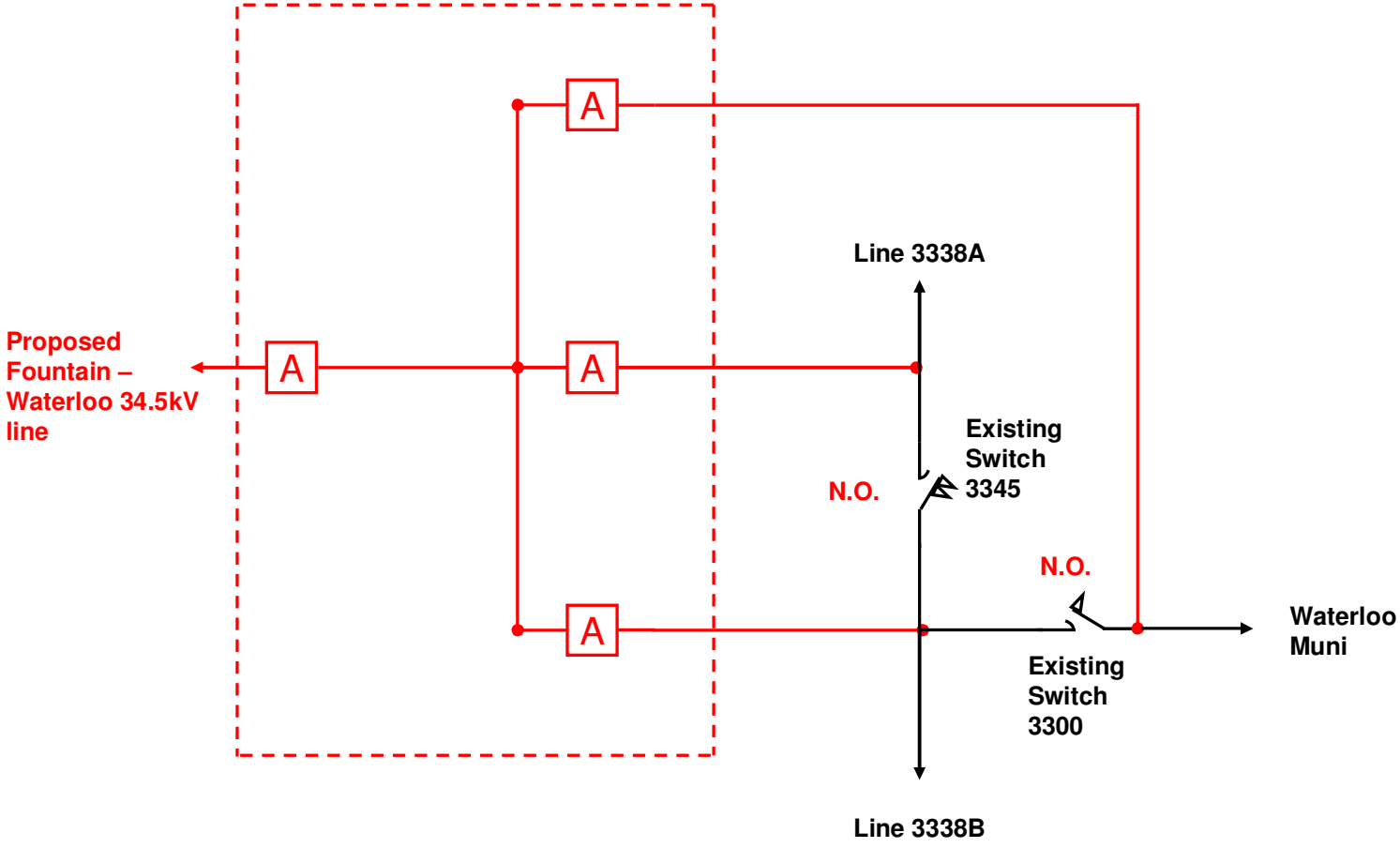

Alternative 2

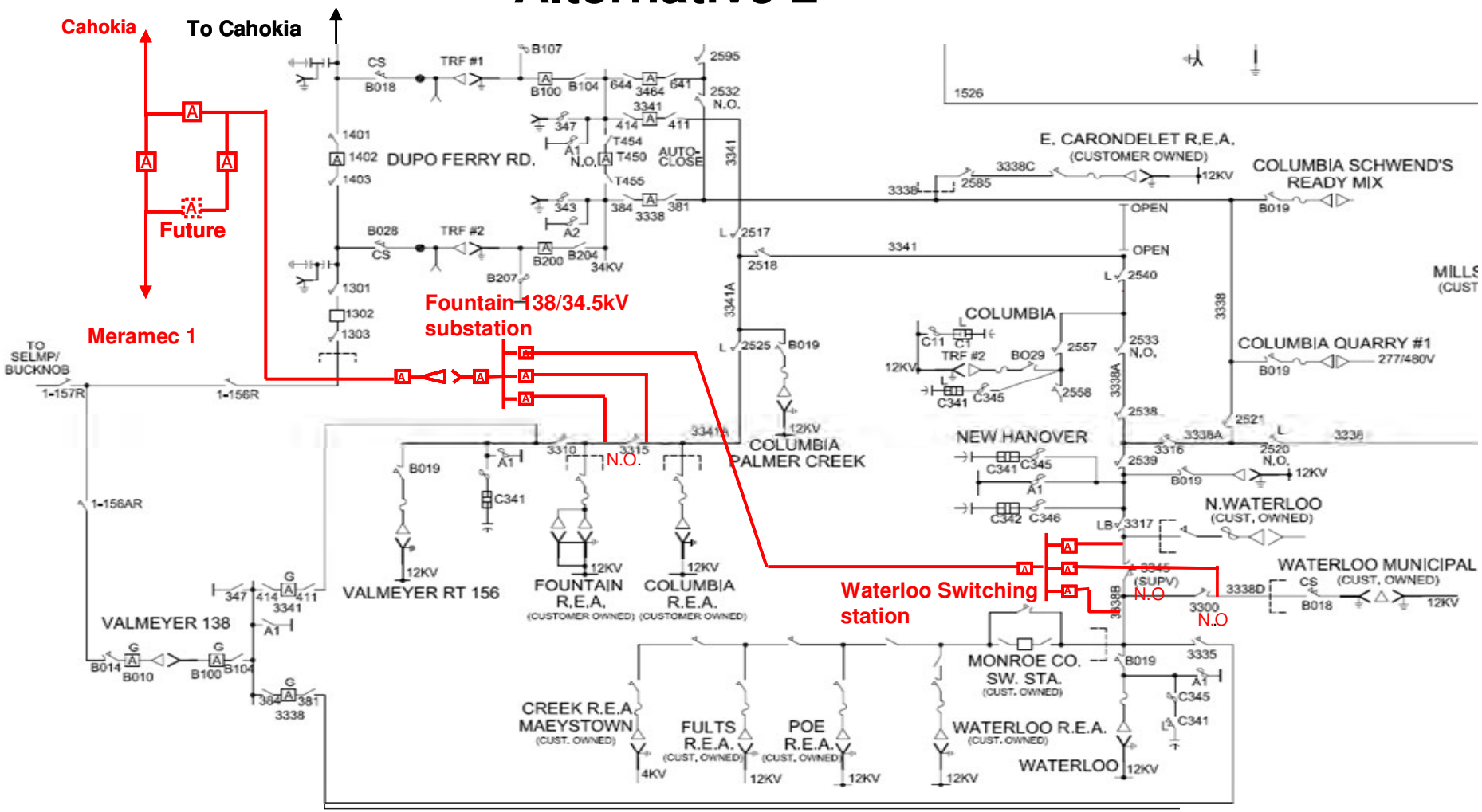

Alternative 2 – Proposed new Fountain substation

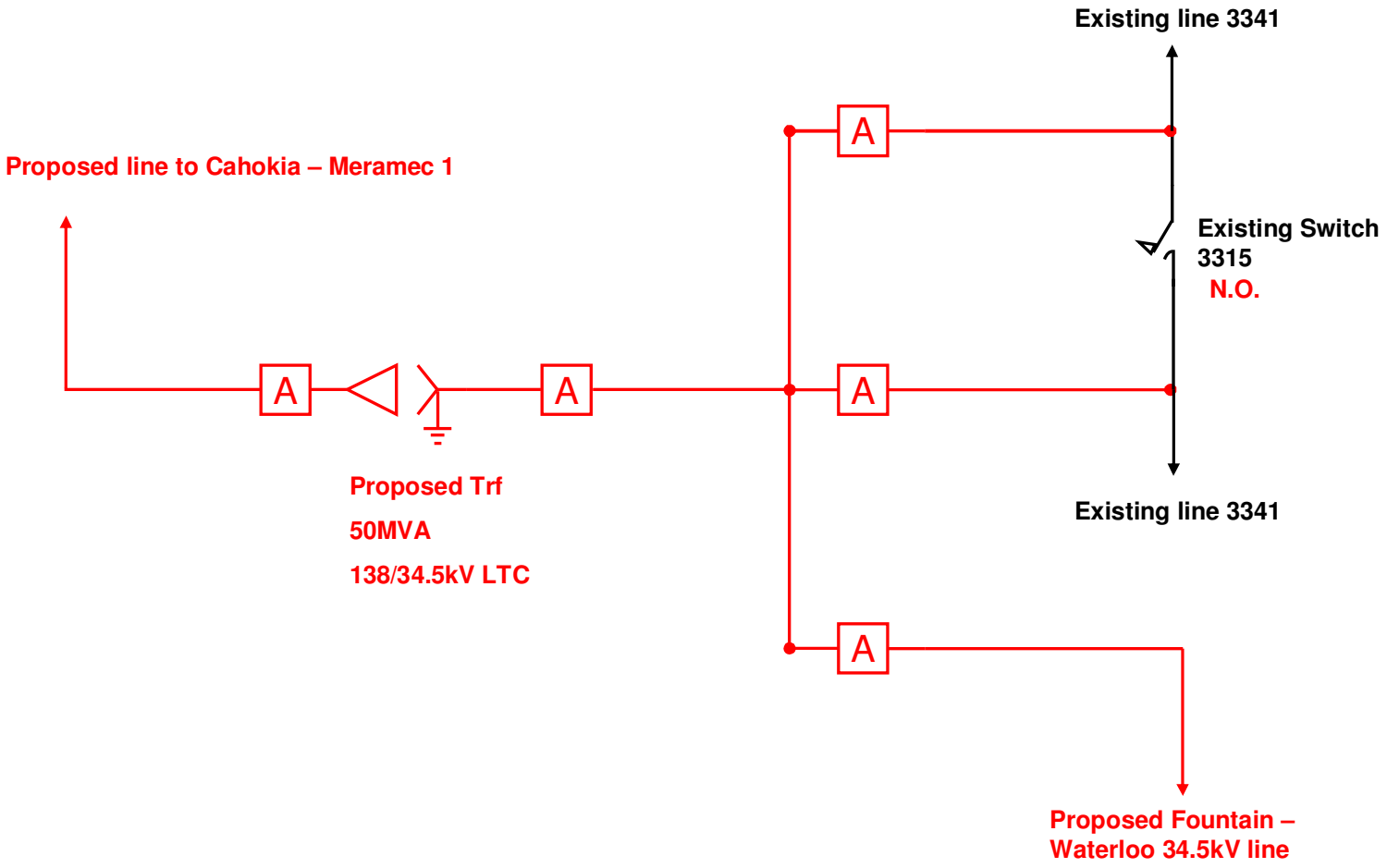

Alternative 2 - Proposed Waterloo Switching Station

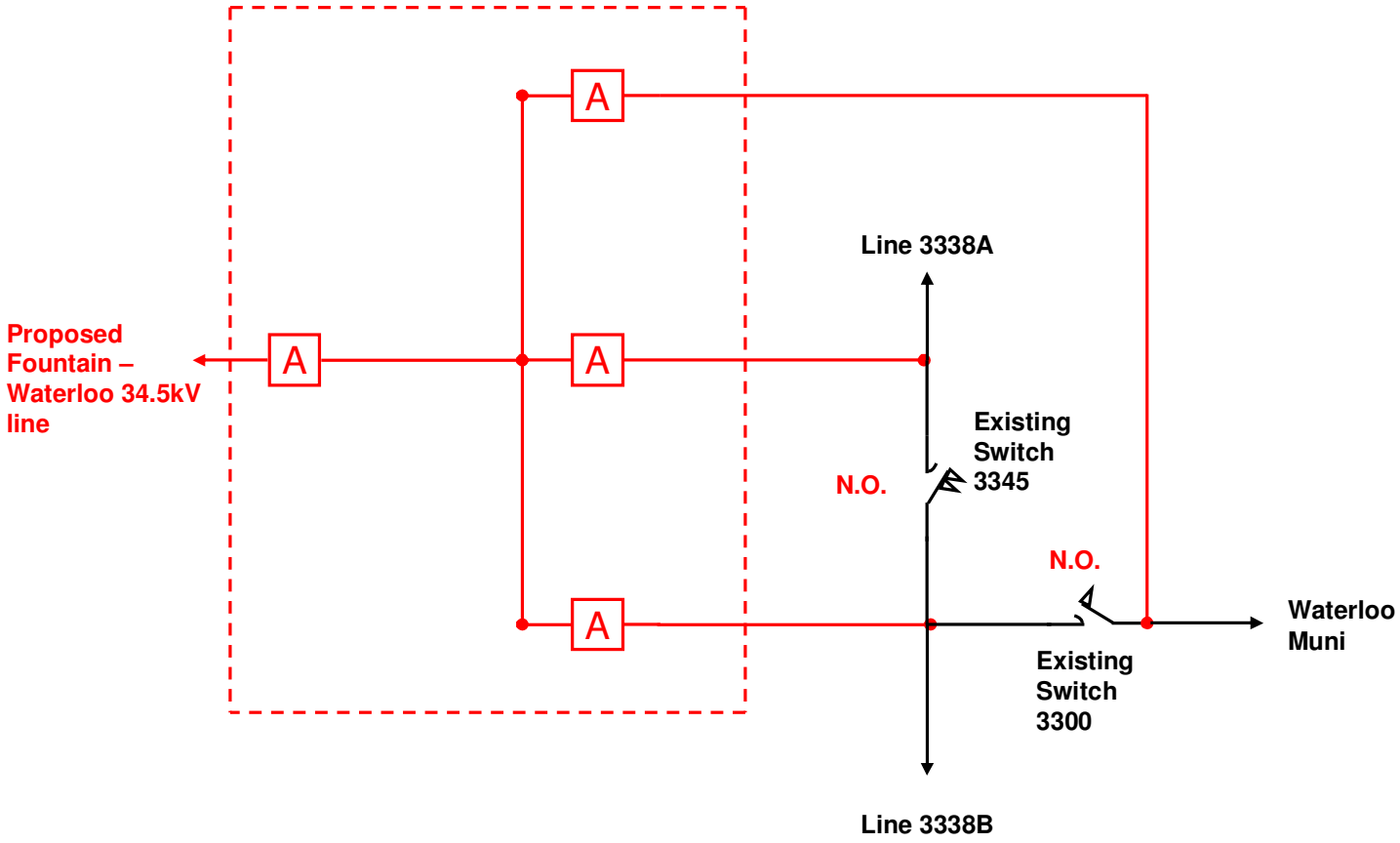

Alternative 3

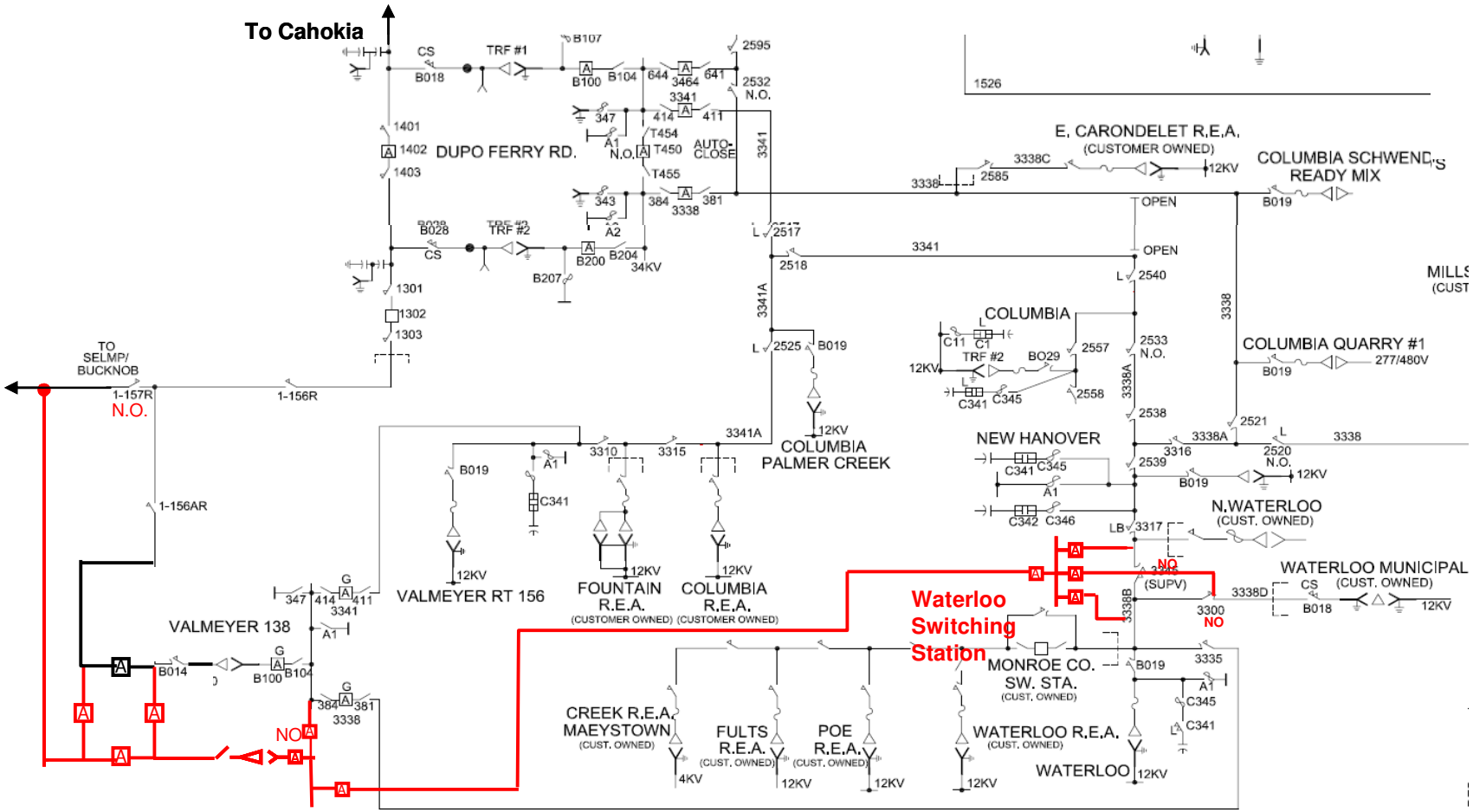

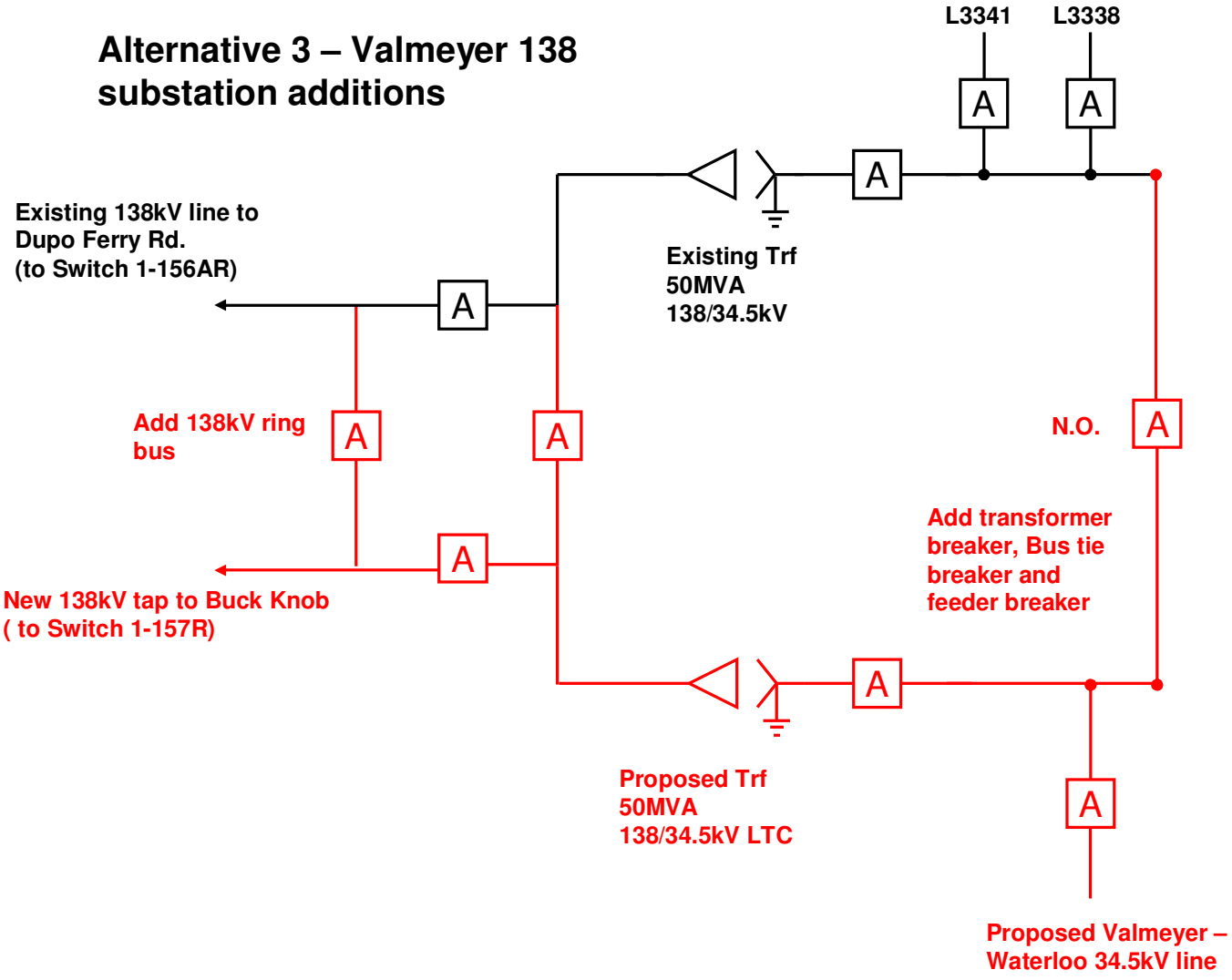
Alternative 3 – Valmeyer 138 substation additions
L3341
L3338
A
A
A
Existing 138kV line to Dupo Ferry Rd. (to Switch 1-156AR)
A
Existing Trf 50MVA 138/34.5kV
Add 138kV ring bus
A
A
N.O.
A
Add transformer breaker, Bus tie breaker and feeder breaker
A
New 138kV tap to Buck Knob (to Switch 1-157R)
A
Proposed Trf 50MVA 138/34.5kV LTC
A
Proposed Valmeyer – Waterloo 34.5kV line

Alternative 3 - Proposed Waterloo Switching Station

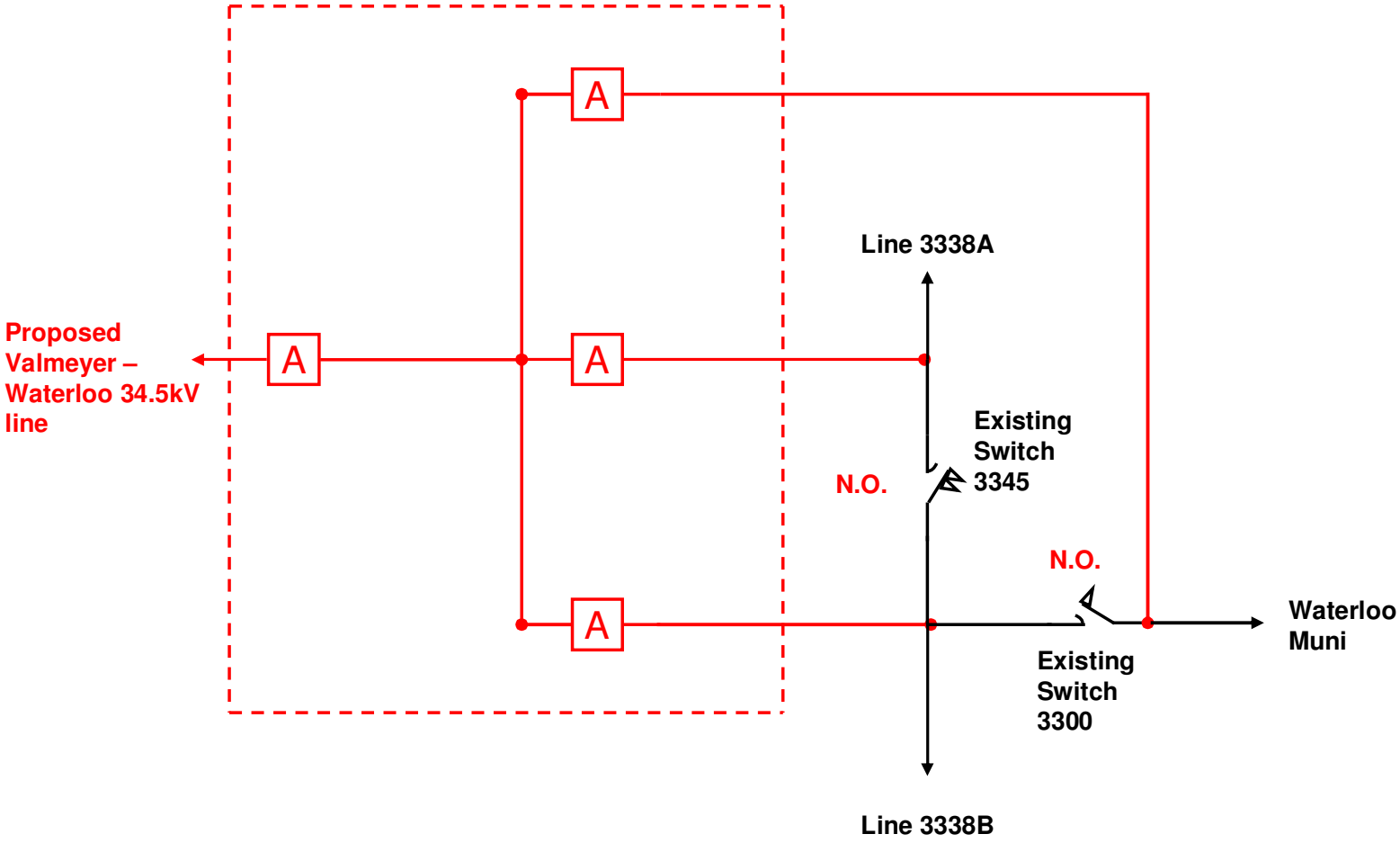

Alternative 4

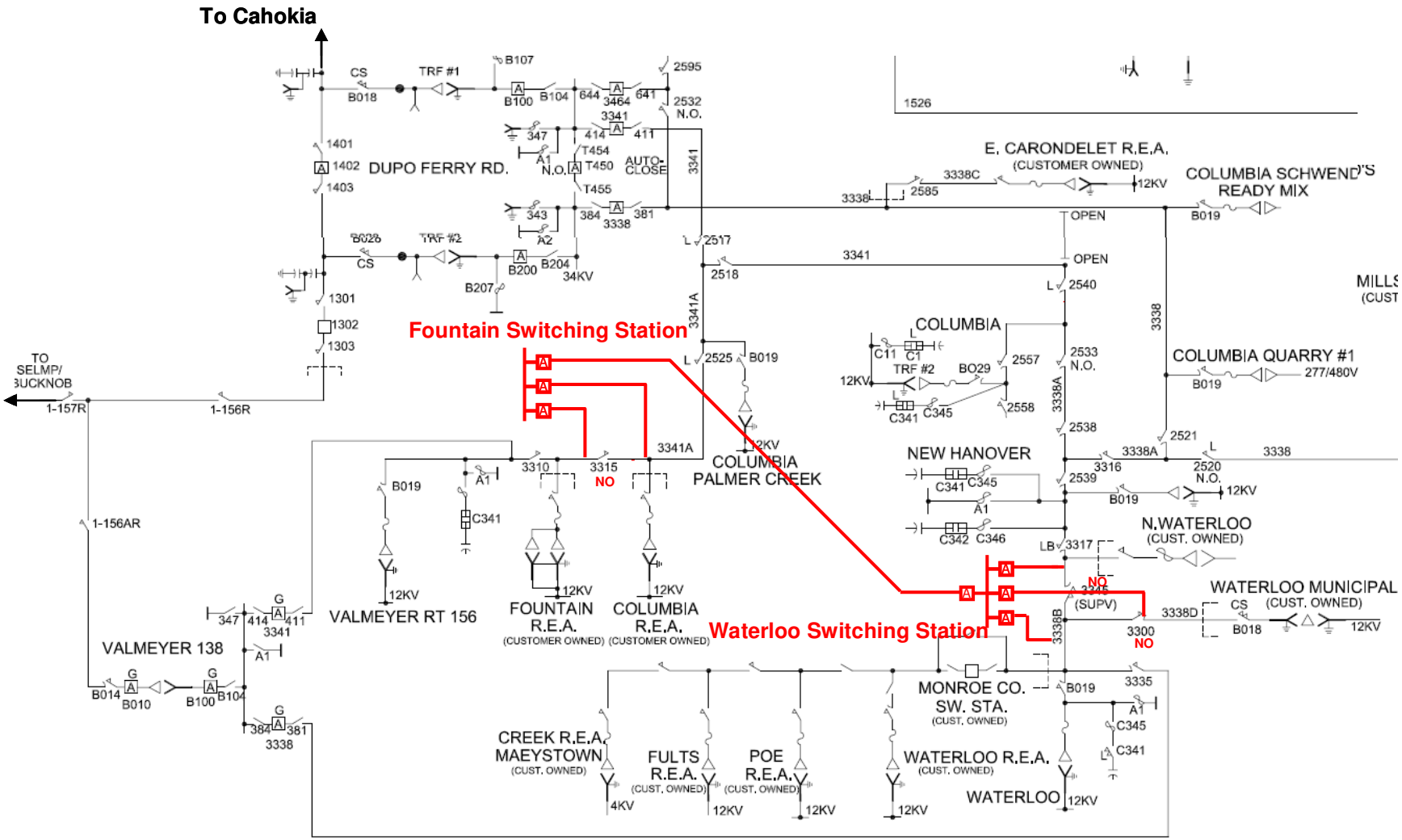

Alternative 4 – Proposed new Fountain switching station

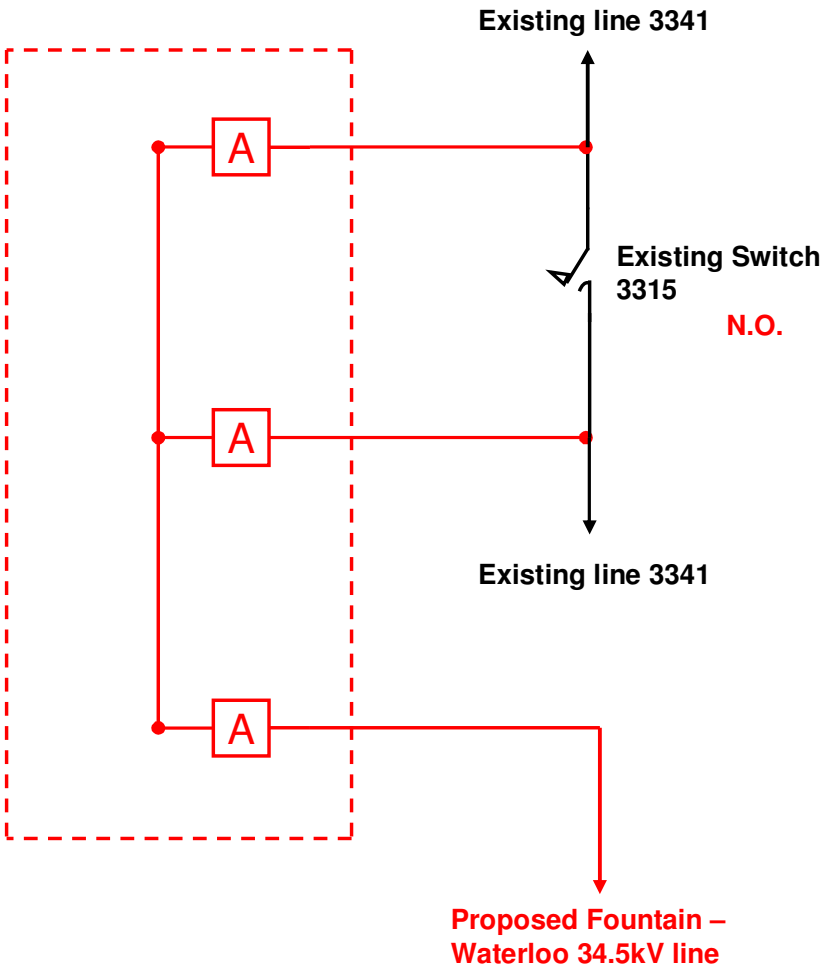

Alternative 4 - Proposed Waterloo Switching Station

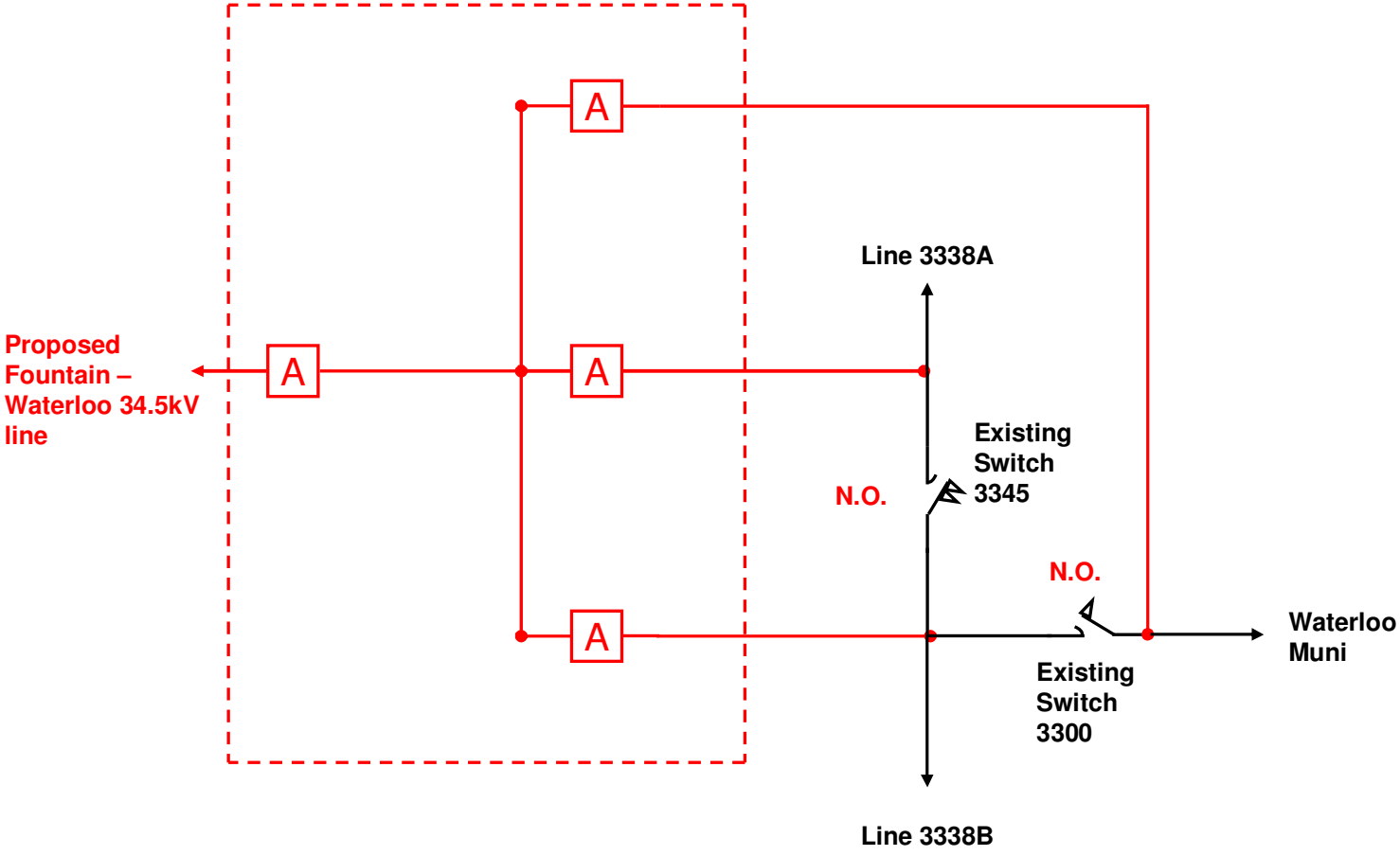

Alternative 5

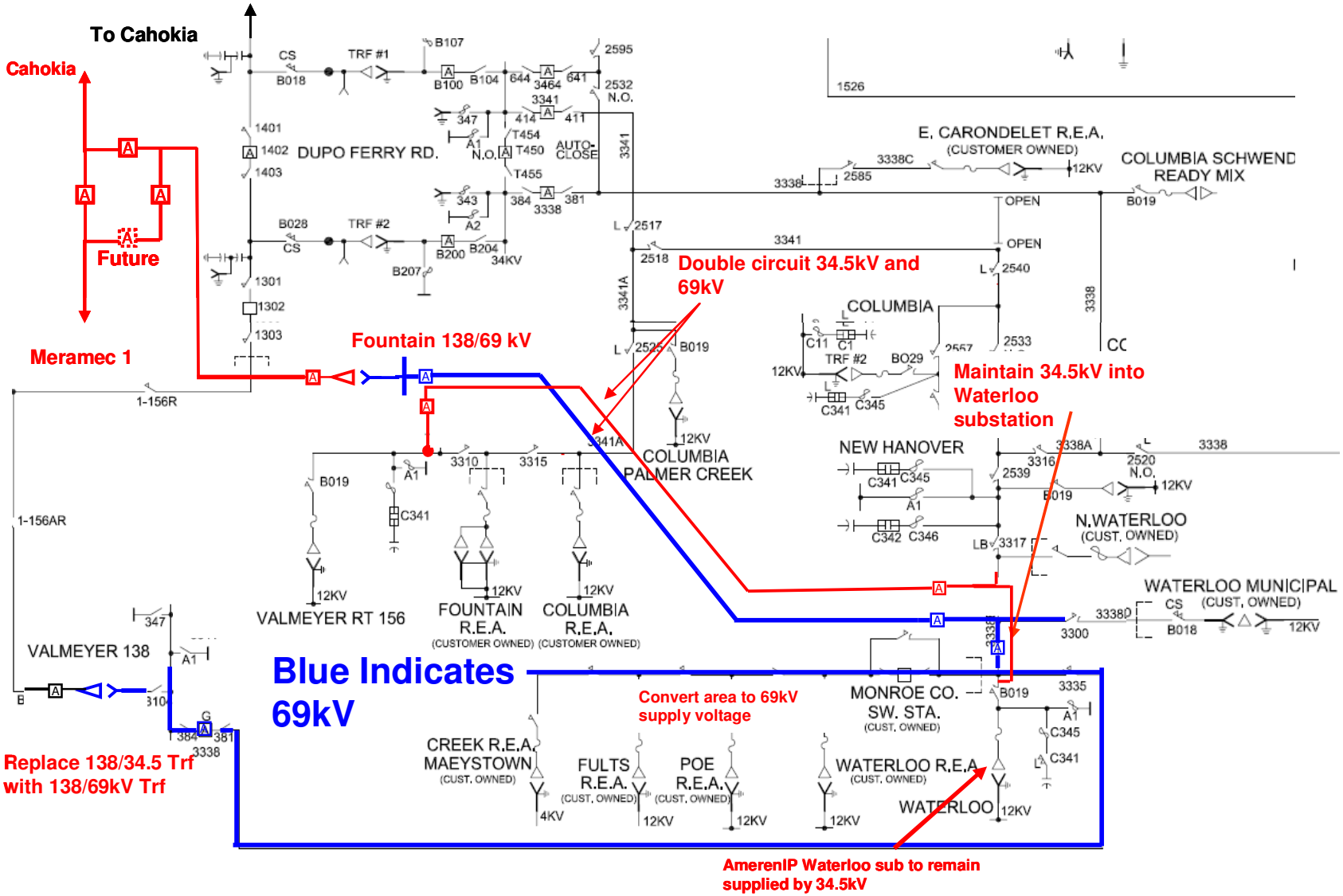

Alternative 5 – Valmeyer 138 substation additions

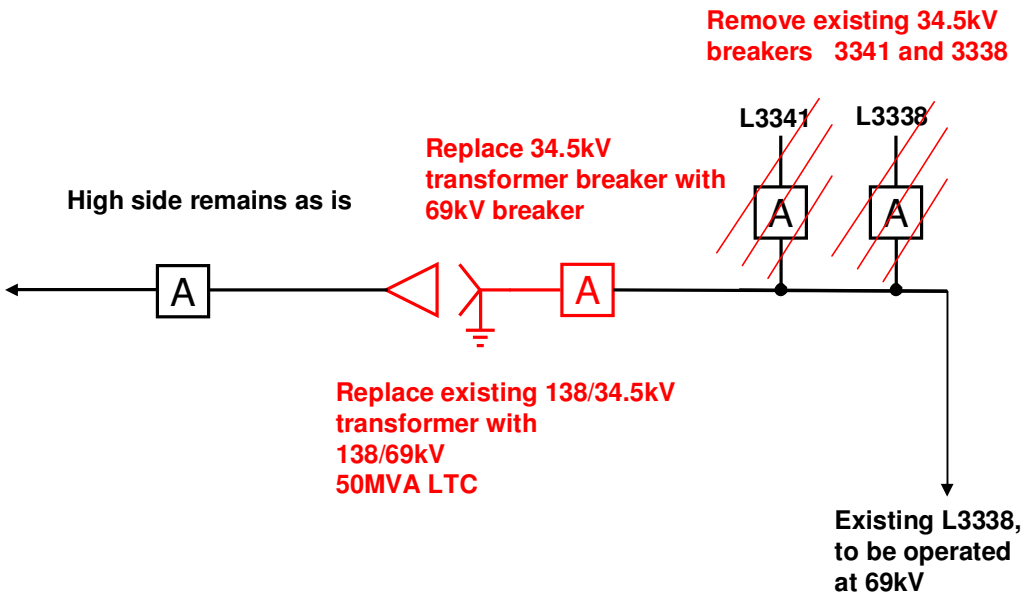

Alternative 5 – proposed Fountain substation

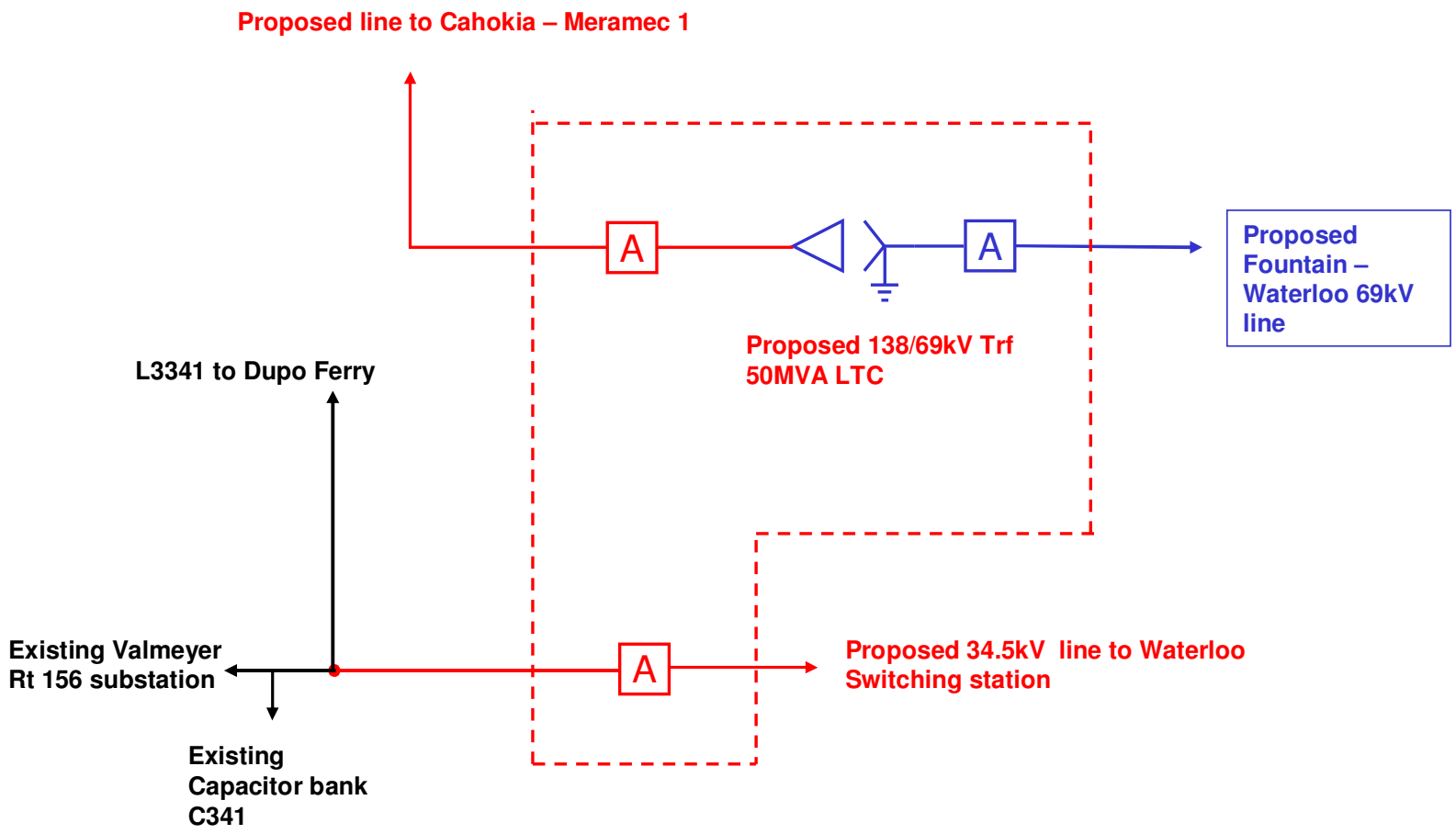

Alternative 5 – Waterloo Switching Station - 69kV and 34.5kV breaker additions and switching configuration

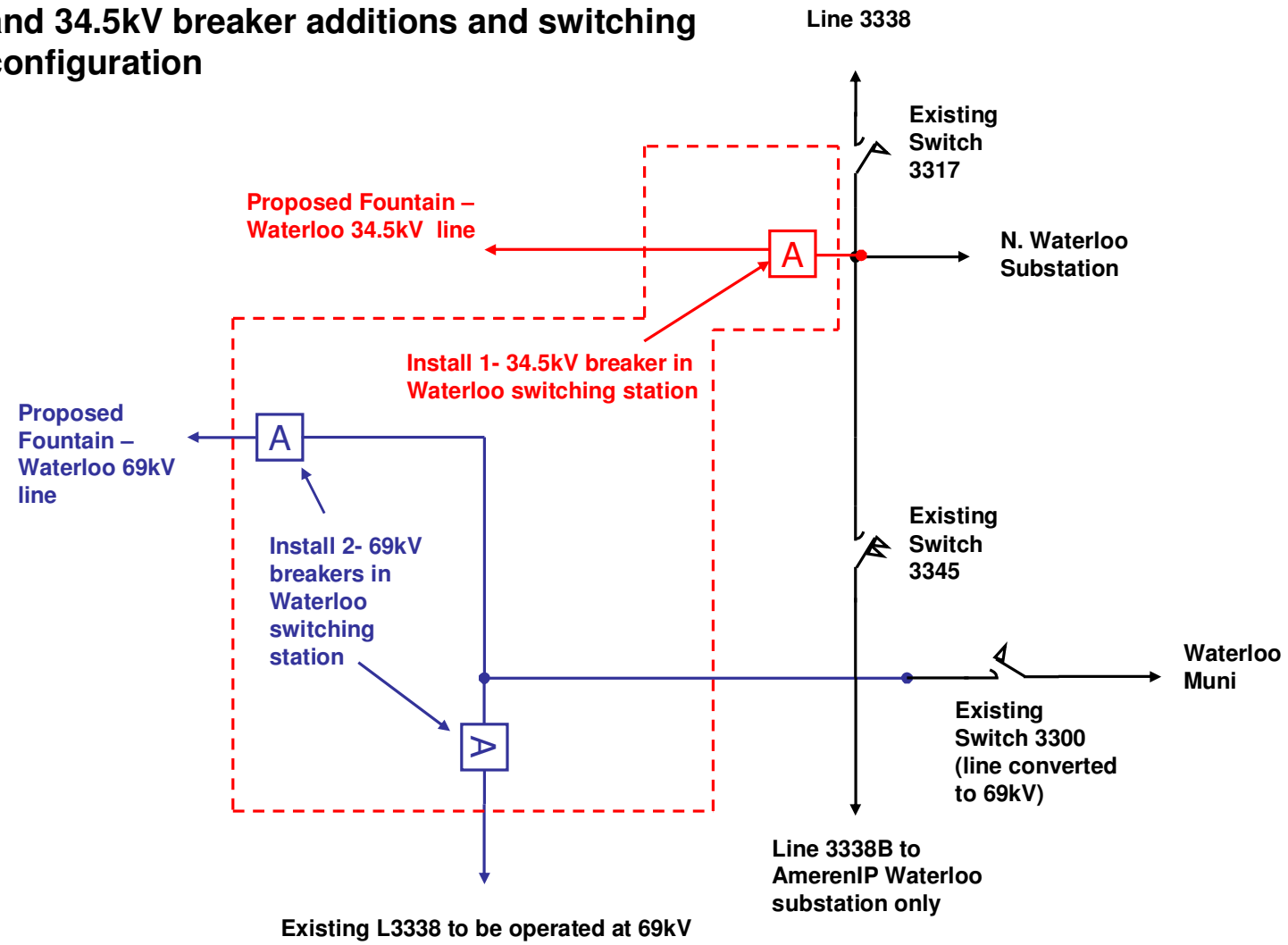

Alternative 6

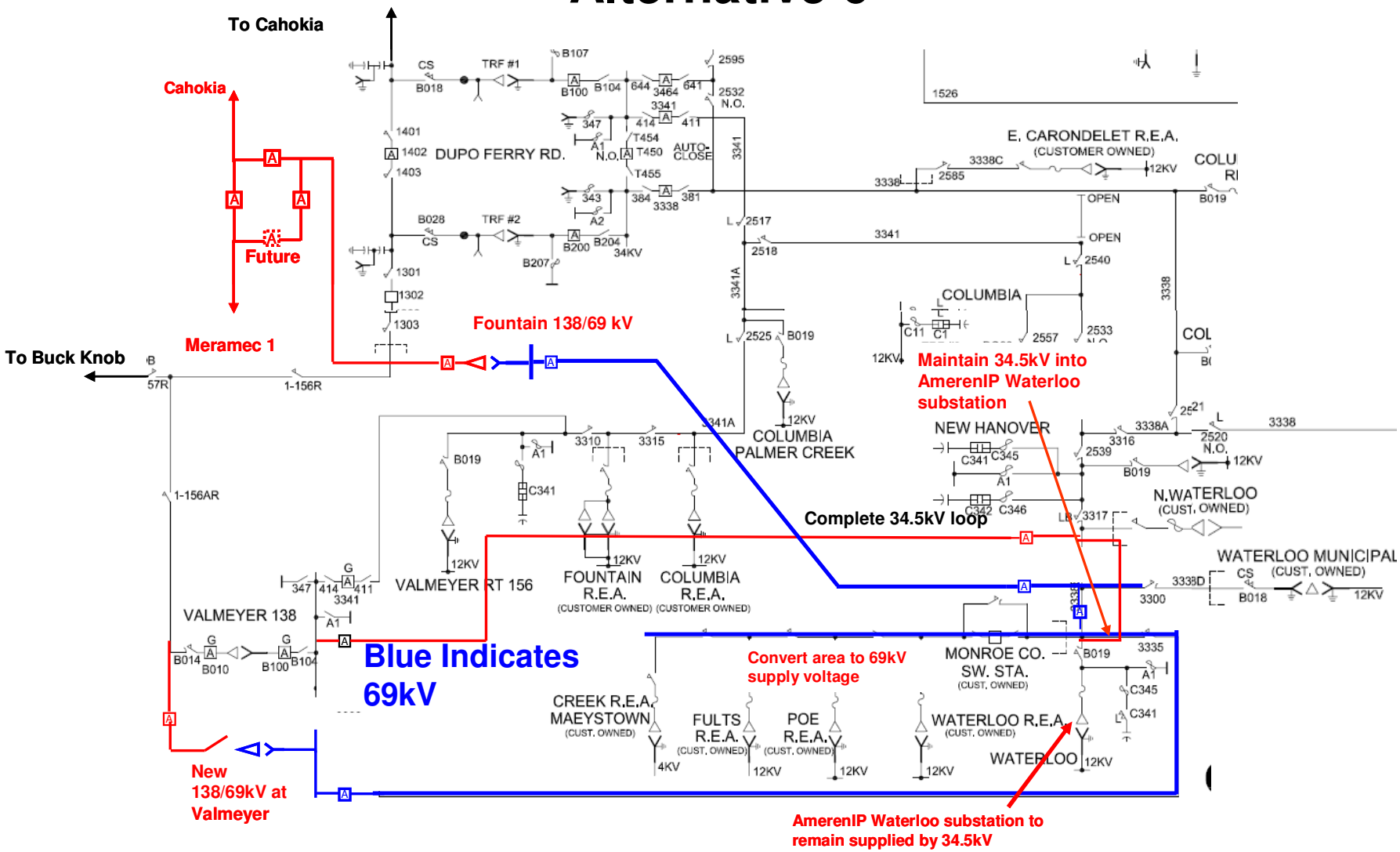

Alternative 6 – Valmeyer 138 substation additions

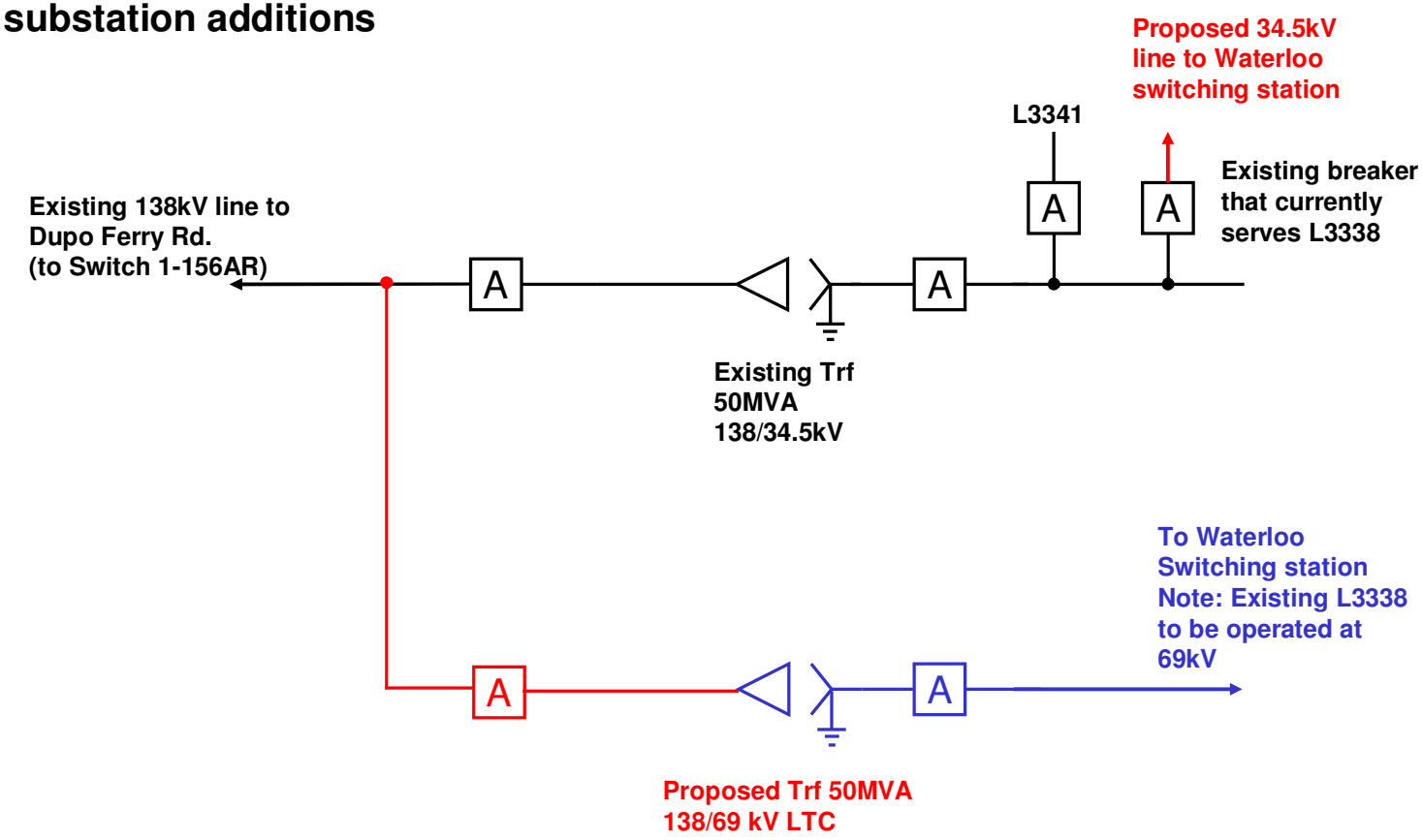

Alternative 6 – proposed Fountain substation

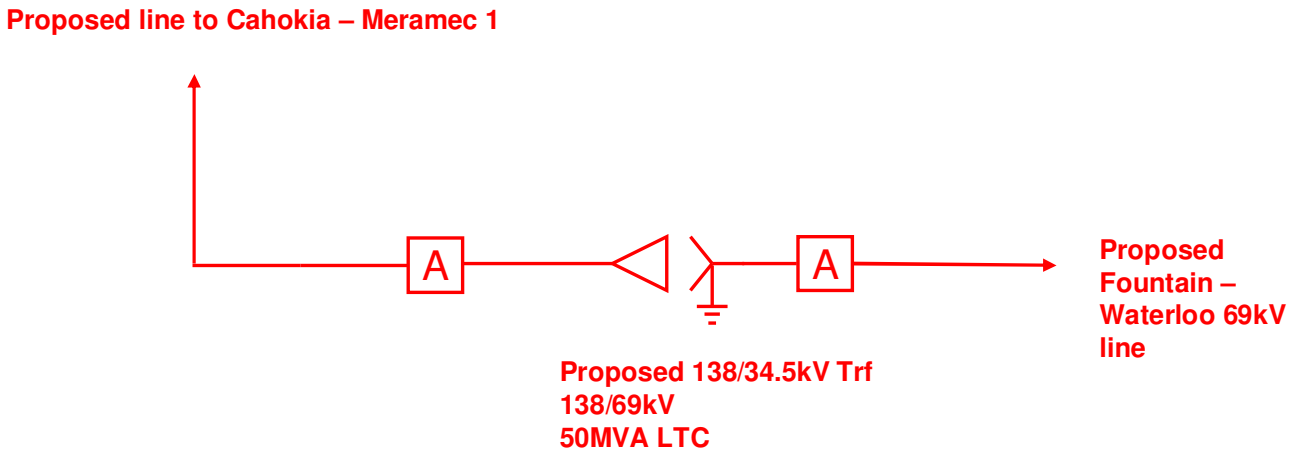

Alternative 6 – Waterloo Switching Station - 69kV and 34.5kV breaker additions and switching configuration

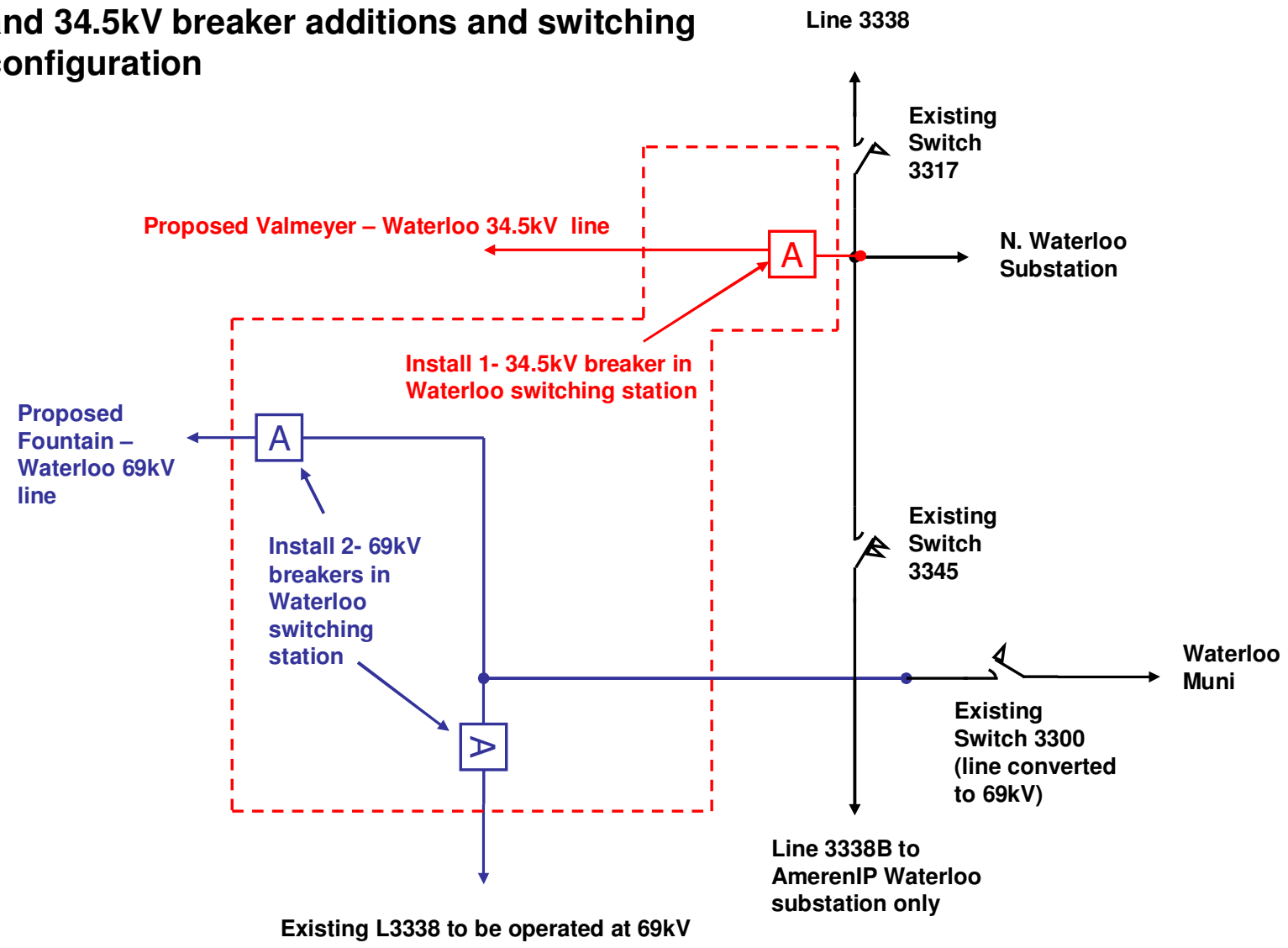

Alternative 7

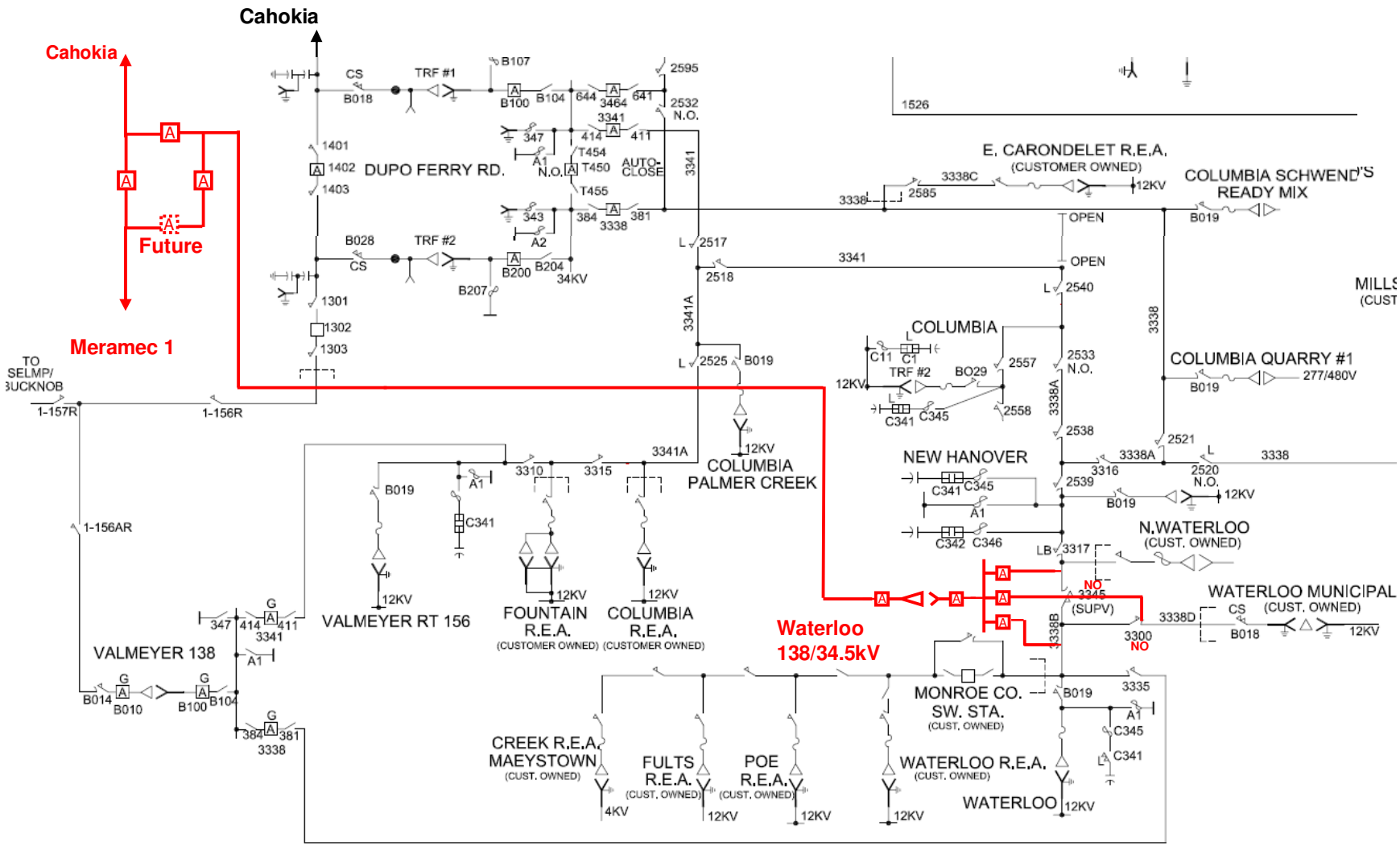

Alternative 7 - Proposed Waterloo bulk supply substation

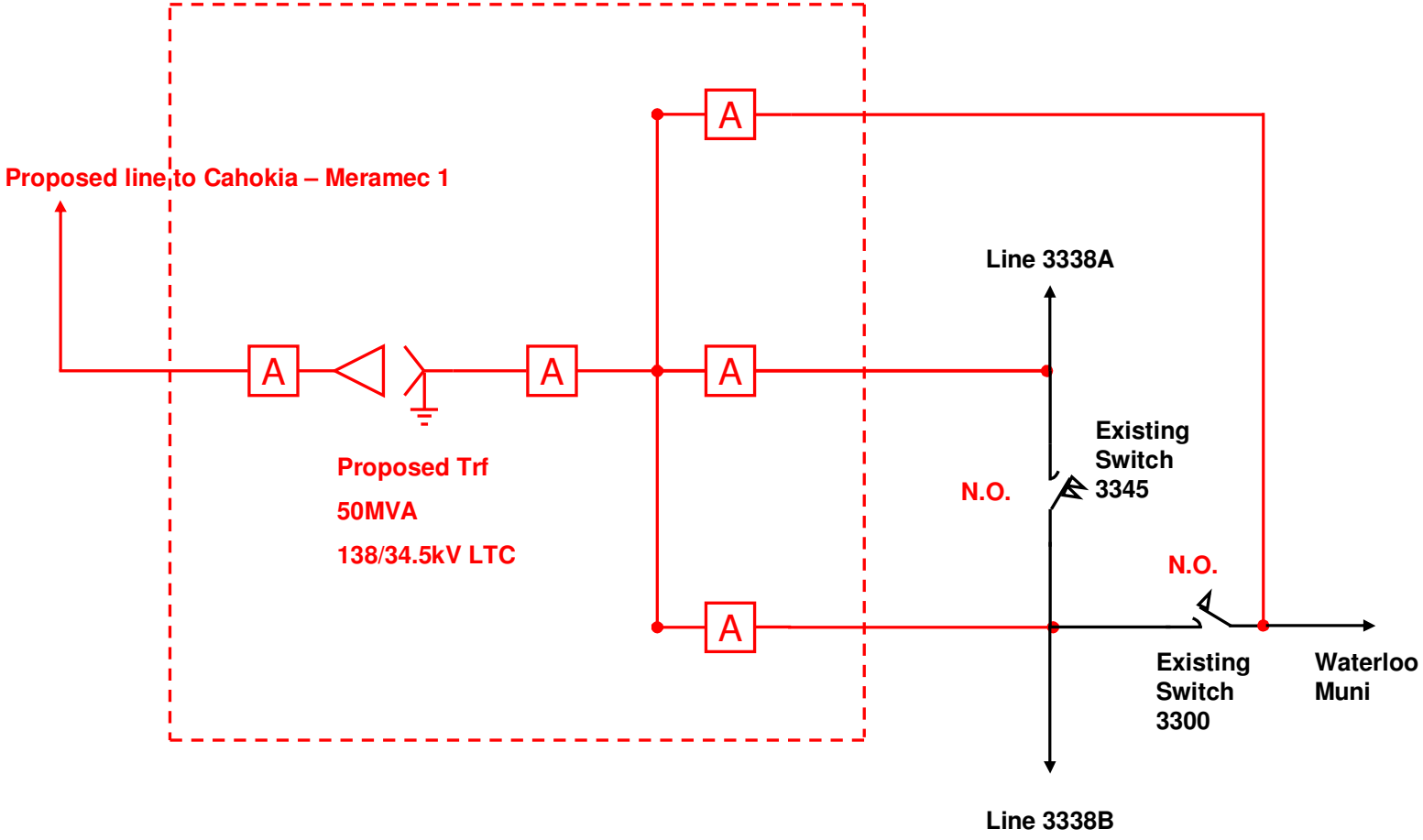

Appendix D – Transformer and Line Loading for Alternative 1 Worst Case Contingencies

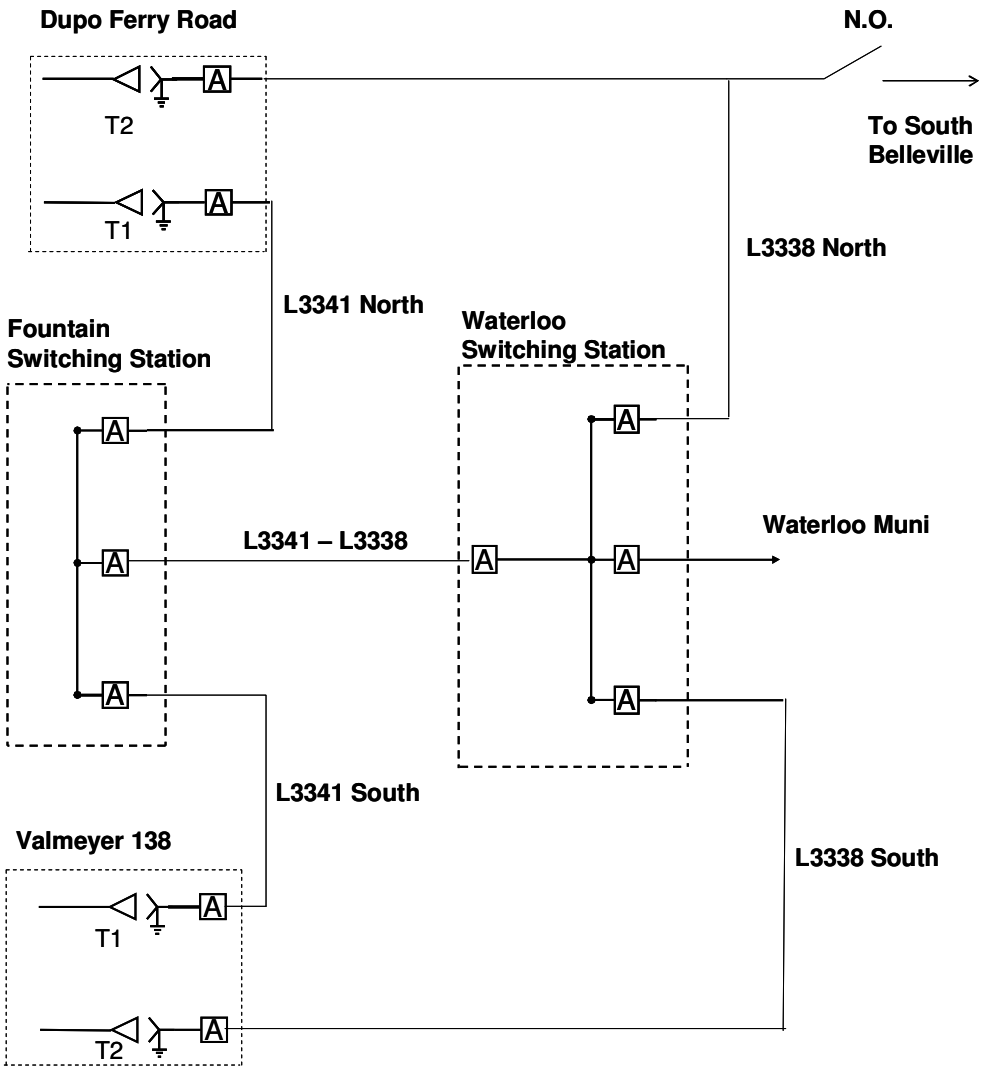

Figure 10 – Waterloo Area Functional One-Line for Recommended Plan

Assuming the Waterloo & Fountain switching stations and the 34 KV line connecting them is built (completing Alternative 4, or Phase 1 of Alternative 1), Tables 5 & 6 show the Transformer & Line loadings for worst case contingency conditions based on 2012 forecasted load.

		System Normal Condition			Worst Contingency Condition			Worst Contingency Description
Substations	**Bus**	**MW**	**MVAR**	**Voltage**	**MW**	**MVAR**	**Voltage**	
DUPOFRY2	93308	20.9	-0.8	1.032	54.1	4.9	1.025	Outage of DUPOFRY1 (transformer#1 in DUPOFRY 138/34.5kV)
DUPOFRY1	93373	37.7	4.3	1.029	55.9	10.0	1.025	Outage of transformer in Valmeyer 138/34.5 substation
VAL 138_1	93396	39.7	3.8	1.031	60.7	9.1	1.032	Outage of 34.5kV circuit from DUPOFRY1 to 3341A TAP
VAL 156	93394	5.3	1.9	1.031	5.3	1.9	0.995	Outage of transformer in Valmeyer 138/34.5 substation
WATERLOO	93370	2.0	0.9	1.016	2.0	0.9	0.964	Outage of transformer in Valmeyer 138/34.5 substation
MONRO SW	93434	13.0	4.8	1.016	13.0	4.8	0.936	Outage of transformer in Valmeyer 138/34.5 substation
WATERMUN	93311	25.5	3.6	1.014	25.5	3.6	0.934	Outage of transformer in Valmeyer 138/34.5 substation
N.WATER	93433	2.8	1.3	1.020	2.8	1.3	0.947	Outage of transformer in Valmeyer 138/34.5 substation
NEWHANVR	93369	5.3	1.5	1.032	5.3	1.5	0.970	Outage of transformer in Valmeyer 138/34.5 substation
FONT REA	93363	0.9	0.2	1.020	0.9	0.2	0.945	Outage of transformer in Valmeyer 138/34.5 substation
COL QUAR	93366	1.1	1.1	1.027	1.1	1.1	0.940	Outage of transformer in Valmeyer 138/34.5 substation
SCHWENDS	93422	0.1	0.0	1.027	0.1	0.0	0.992	Outage of transformer in Valmeyer 138/34.5 substation
COLUMB REA	93803	2.0	0.6	1.017	2.0	0.6	0.952	Outage of 34.5kV circuit from DUPOFRY1 to 3341A TAP
PALMERCK	93313	13.0	3.0	1.017	13.0	3.1	0.976	Outage of 34.5kV circuit from DUPOFRY1 to 3341A TAP
COLUMBIA	93367	12.7	1.1	1.020	12.7	1.2	0.972	Outage of 34.5kV circuit from DUPOFRY1 to 3341A TAP

Table 5 – 2012 Transformer Loading Summary

		System Normal Condition			Worst Contingency Condition			Worst Contingency Description
Lines	**Bus**	**MW**	**MVAR**	**Voltage**	**MW**	**MVAR**	**Voltage**	
L3338 at DUPOFRY	93308	20.9	0.8	1.032	27.1	2.2	1.025	Outage of 34.5kV circuit from Valmayer 138kv to Waterloo
L3341 at DUPOFRY	93373	27.0	0.3	1.030	50.5	7.2	1.001	Outage of transformer in Valmeyer 138/34.5 substation
L3338 at VAL 138	93396	21.7	1.6	1.031	32.3	1.7	1.027	Outage of 34.5kV circuit from Valmayer 138kv to Valmayer RT 156
L3341 at VAL 138	93396	17.8	-2.4	1.031	35,2	3.5	1.033	Outage of 34.5kV circuit from DUPOFRY1 to 3341A TAP
L3338 North at New WAT SW BKR positition	93311	-7.7	-3.4	1.014	-25.4	-3.3	0.936	Outage of transformer in Valmeyer 138/34.5 substation
L3338 South at New WAT SW BKR posititions	93311	-7.5	-0.5	1.014	14.0	0.5	0.982	Outage of 34.5kV circuit from Valmayer 138kv to Waterloo
LNEW WAT SW to FONT SW (L3338-L3341)	93311	-10.4	0.1	1.014	-25.8	-0.1	0.982	Outage of 34.5kV circuit from Valmayer 138kv to Waterloo
L3341 North at New FONT SW station	93363	1.1	0.3	1.020	29.7	5.9	0.992	Outage of 34.5kV circuit from DUPOFRY1 to 3341A TAP
L3341 South at New FONT SW station	93363	-12.4	-0.5	1.020	-29.0	-4.1	0.992	Outage of 34.5kV circuit from DUPOFRY1 to 3341A TAP

Table 6 – 2012 Line Loading Summary

Assuming the Waterloo & Fountain switching stations and the 34 KV line connecting them is built (completing Alternative 4, or Phase 1 of Alternative 1), Tables 7 & 8 show the Transformer & Line loadings for worst case contingency conditions based on 2015 forecasted load. These show the need for Phase 2 of Alternative 1 (addition of 2nd transformer at Valmeyer 138), due to numerous low voltage situations.

		System Normal Condition			Worst Contingency Condition			Worst Contingency Description:
Substations	**Bus**	**MW**	**MVAR**	**Voltage**	**MW**	**MVAR**	**Voltage**	
DUPOFRY2	93308	23.6	0.7	1.034	57.1	1.9	1.024	Outage of DUPOFRY1 (transformer#1 in Dupofry 138/34.5kV)
DUPOFRY1	93373	38.5	1.8	1.025	59.3	16.5	1.027	Outage of transformer in Valmeyer 138/34.5 substation
VAL 138_1	93396	43.6	8.6	1.026	66.0	15.6	1.010	Outage of 34.5kV circuit from DUPOFRY1 to 3341A TAP
VAL 156	93394	6.0	2.2	1.012	6.0	2.2	0.954	Outage of transformer in Valmeyer 138/34.5 substation
WATERLOO	93370	2.4	1.1	1.063	2.4	1.2	0.953	Outage of transformer in Valmeyer 138/34.5 substation
MONRO SW	93434	13.8	5.7	1.012	13.8	5.7	0.881	Outage of transformer in Valmeyer 138/34.5 substation
WATERMUN	93311	28.5	4.1	0.995	28.5	4.1	0.886	Outage of transformer in Valmeyer 138/34.5 substation
N.WATER	93433	3.4	1.6	0.996	3.1	1.5	0.898	Outage of transformer in Valmeyer 138/34.5 substation
NEWHANVR	93369	6.5	2.0	1.018	6.0	1.9	0.941	Outage of transformer in Valmeyer 138/34.5 substation
FONT REA	93363	0.9	0.2	1.014	0.9	0.2	0.904	Outage of transformer in Valmeyer 138/34.5 substation
COL QUAR	93366	1.1	1.1	1.015	1.0	1.0	0.892	Outage of transformer in Valmeyer 138/34.5 substation
SCHWENDS	93422	0.1	0.0	1.015	0.1	0.1	0.997	Outage of transformer in Valmeyer 138/34.5 substation
COLUMB REA	93803	2.2	0.6	1.008	2.2	0.6	0.913	Outage of 34.5kV circuit from DUPOFRY1 to 3341A TAP
PALMERCK	93313	13.3	3.1	1.017	13.3	3.2	0.938	Outage of 34.5kV circuit from DUPOFRY1 to 3341A TAP
COLUMBIA	93367	13.0	1.3	1.030	13.0	1.4	0.936	Outage of 34.5kV circuit from DUPOFRY1 to 3341A TAP

Table 7 – 2015 Transformer loading summary prior to second Valmeyer 138 transformer installation

		System Normal Condition			Worst Contingency Condition			Worst Contingency Description:
Lines	**Bus**	**MW**	**MVAR**	**Voltage**	**MW**	**MVAR**	**Voltage**	**Contingency Description:**
L3338 at DUPOFRY	93308	23.6	0.7	1.033	33.7	5.6	1.032	Outage of 34.5kV circuit from Valmayer 138kv to Waterloo
L3341 at DUPOFRY	93373	24.0	1.3	1.022	54.5	7.9	0.991	Outage of transformer in Valmeyer 138/34.5 substation
L3338 at VAL 138	93396	27.5	5.1	1.034	35.9	5.2	1.028	Outage of 34.5kV circuit from Valmayer 138/34.5kv to Valmayer RT 156
L3341 at VAL 138	93397	18.3	-1.3	1.031	37.9	7.5	1.000	Outage of 34.5kV circuit from DUPOFRY1 to 3341A TAP
L3338 North at New WAT SW BKR positition	93311	-8.9	-2.9	1.007	-28.0	-4.9	0.886	Outage of transformer in Valmeyer 138/34.5 substation
L3338 South at New WAT SW BKR posititions	93311	-8.4	-0.5	1.007	16.5	3.0	0.958	Outage of 34.5kV circuit from Valmayer 138kv to Waterloo
LNEW WAT SW to FONT SW (L3338-L3341)	93311	-11.3	-0.7	1.007	-28.6	-2.2	0.958	Outage of 34.5kV circuit from Valmayer 138kv to Waterloo
L3341 North at New FONT SW station	93363	-0.1	-0.1	1.018	30.8	8.7	0.953	Outage of 34.5kV circuit from DUPOFRY1 to 3341A TAP
L3341 South at New FONT SW station	93363	-12.2	-1.2	1.018	-30.9	-6.5	0.953	Outage of 34.5kV circuit from DUPOFRY1 to 3341A TAP

Table 8 – 2015 Line loading summary prior to second Valmeyer 138 transformer installation

Assuming the second 138 KV line is brought to Valmeyer & the second 138/34.5 KV transformer is installed (completed Alternative 1), Tables 9 & 10 show the Transformer & Line loadings for worst case contingency conditions based on 2015 forecasted load.

		System Normal Condition			Worst Contingency Condition			Worst Contingency Description:
Substations	**Bus**	**MW**	**MVAR**	**Voltage**	**MW**	**MVAR**	**Voltage**	
DUPOFRY2	93308	20.0	1.2	1.028	50.5	8.5	1.029	Outage of DUPOFRY1 (transformer#1 in Dupofry 138/34.5kV)
DUPOFRY1	93373	35.0	5.0	1.025	46.4	9.7	1.028	Outage of DUPOFRY2 (transformer#1 in Dupofry 138/34.5kV)
VAL 138_1	93396	27.7	6.5	1.030	43.6	8.6	1.026	Outage of Valmeyer1 (transformer#2 in Valmeyer 138/34.5kV substation)
VAL 138_2	93397	24.2	0.2	1.030	43.6	8.6	1.026	Outage of Valmeyer2 (transformer#1 in Valmeyer 138/34.5kV substation)
VAL 156	93394	6.0	2.2	1.011	6.0	2.2	0.985	Outage of 34.5kV circuit from Valmayer 138kv to VAL 156
WATERLOO	93370	2.4	1.1	1.061	2.4	1.2	1.000	Outage of 34.5kV circuit from Valmayer 138kv to Waterloo
MONRO SW	93434	13.8	5.7	1.005	13.8	5.7	0.950	Outage of 34.5kV circuit from Valmayer 138kv to Waterloo
WATERMUN	93311	28.5	4.1	1.003	28.5	4.1	0.955	Outage of 34.5kV circuit from Valmayer 138kv to Waterloo
N.WATER	93433	3.4	1.6	1.001	3.1	1.5	0.966	Outage of 34.5kV circuit from Valmayer 138kv to Waterloo
NEWHANVR	93369	6.5	2.0	1.015	6.0	1.9	0.977	Outage of 34.5kV circuit from Valmayer 138kv to Waterloo
FONT REA	93363	0.9	0.2	1.014	0.9	0.2	0.998	Outage of 34.5kV circuit from VAL 156 to COLQ#3
COL QUAR	93366	1.1	1.1	1.019	1.0	1.0	0.979	Outage of 34.5kV circuit from DUPOFRY2 to CARN REA
SCHWENDS	93422	0.1	0.0	1.019	0.1	0.1	0.979	Outage of 34.5kV circuit from DUPOFRY2 to CARN REA
COLUMB REA	93803	2.2	0.6	1.010	2.2	0.6	0.940	Outage of 34.5kV circuit from DUPOFRY1 to 3341A TAP
PALMERCK	93313	13.3	3.1	1.010	13.3	3.2	0.977	Outage of 34.5kV circuit from DUPOFRY1 to 3341A TAP
COLUMBIA	93367	13.0	1.3	1.023	13.0	1.4	0.972	Outage of 34.5kV circuit from DUPOFRY1 to 3341A TAP

Table 9 – 2015 Transformer Loading Summary

		System Normal Condition			Worst Contingency Condition			Worst Contingency Description:
Lines	**Bus**	**MW**	**MVAR**	**Voltage**	**MW**	**MVAR**	**Voltage**	**Contingency Description:**
L3338 at DUPOFRY	93308	19.9	0.5	1.020	31.8	6.5	1.011	Outage of 34.5kV circuit from Valmayer 138kv to Waterloo
L3341 at DUPOFRY	93373	24.2	1.9	1.013	35.7	2.1	1.015	Outage of 34.5kV circuit from Valmayer 138/34.5kv to Valmayer RT
L3338 at VAL 138	93396	27.6	4.0	1.005	35.3	6.3	0.996	Outage of 34.5kV circuit from FONT REA to WATERMUN
L3341 at VAL 138	93397	24.1	1.6	1.029	39.3	6.6	1.023	Outage of 34.5kV circuit from DUPOFRY1 to 3341A TAP
L3338 North at New WAT SW BKR posititION	93311	-5.4	-3.8	1.003	-10.3	-3.5	0.992	Outage of 34.5kV circuit from FONT REA to WATERMUN
L3338 South at New WAT SW BKR posititions	93311	-10.8	-0.1	1.003	-18.2	-0.6	0.992	Outage of 34.5kV circuit from FONT REA to WATERMUN
LNEW WAT SW to FONT SW (L3338-L3341)	93311	-12.3	-0.2	1.003	-28.6	-2.1	0.991	Outage of 34.5kV circuit from Valmayer 138kv to Waterloo
L3341 North at New FONT SW station	93363	4.6	0.8	1.001	30.6	7.4	0.980	Outage of 34.5kV circuit from DUPOFRY1 to 3341A TAP
L3341 South at New FONT SW station	93363	-17.8	-0.1	1.014	-32.3	-5.8	0.980	Outage of 34.5kV circuit from DUPOFRY1 to 3341A TAP

Table 10 – 2015 Line Loading Summary