REVISIONS				
NO.	DATE	BY	DESCRIPTION	APP. BY
1				
2				
3				
4				
5				

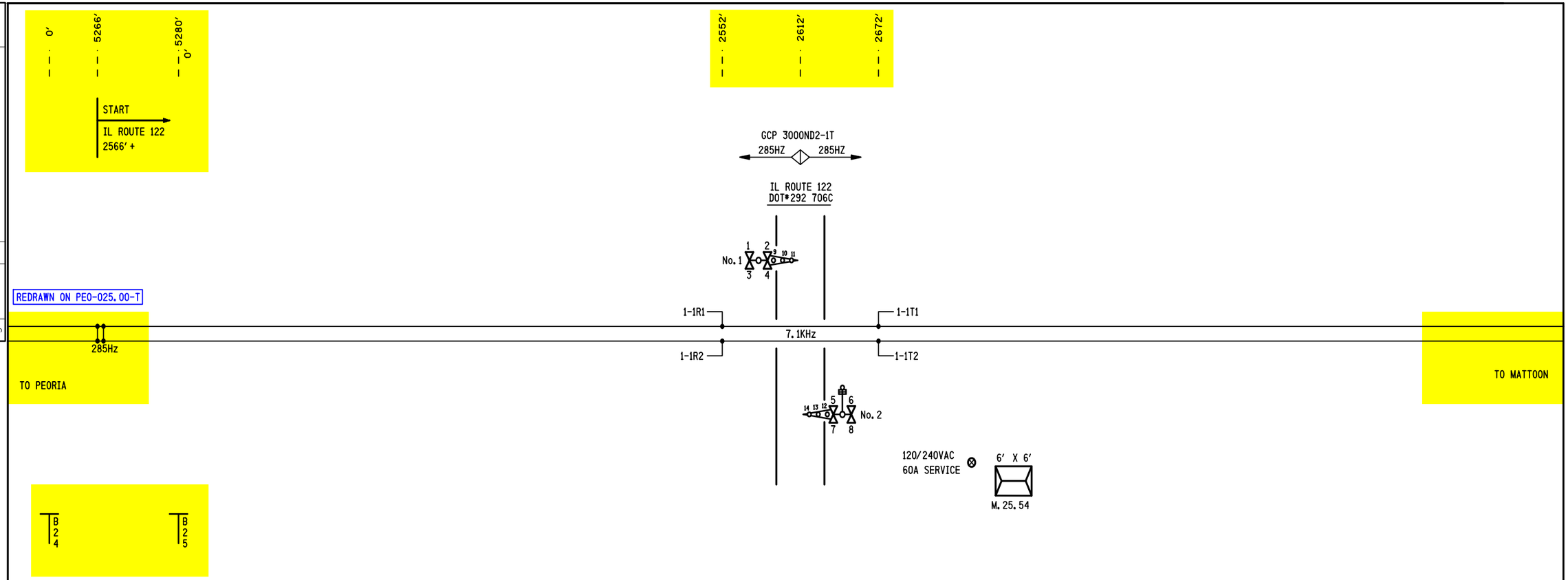

NOTE:

1) DENOTES MULTI-FREQ. NARROW BAND SHUNT 62775-1543.

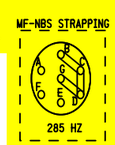

IRC 27 MAR 2013

PROPOSED
DESIGN NO. 10-0581
RED-IN YELLOW-OUT

AS INSTALLED
DATE _____
BY _____
(PRINT NAME)

6' X 6' BUNGALOW

PROPOSED D	PROPOSED M	PROPOSED Y	REVISIONS	D	C	COMPLETED D	COMPLETED M	COMPLETED Y	C
			AS INSTALLED			12	12	06	RLC
03	27	13	REVISED SPEED 30MPH	NAD	BJW				

DIVISION MIDWEST
SUB. PEORIA
SD. 1047 C
MP. 24.00 TO 25.60

SIGNALS AND COMMUNICATIONS
EDMONTON, ALBERTA
25 FEBRUARY 2005

DES. PWW
CH. MSM

TRACK LAYOUT

IL ROUTE 122
DELAVAN, IL

M 02400C01

13

SAFETRAN SYSTEM CORP.
LOUISVILLE DIVISION, LOUISVILLE, KY

INVENSYS RAIL CORPORATION

DES.: NAD	DATE: 03/27/13	JOB NO.: PICA10369	
CKD.: BJW	ISSUE DATE: N/A	EST. NO.: N/A	
DRN.: NAD	PLAN NO.: N/A	SHEET N/A OF N/A	
P TIME: 14:54	P DATE: 12-APR-2013	CAD ID.: 02400C01	

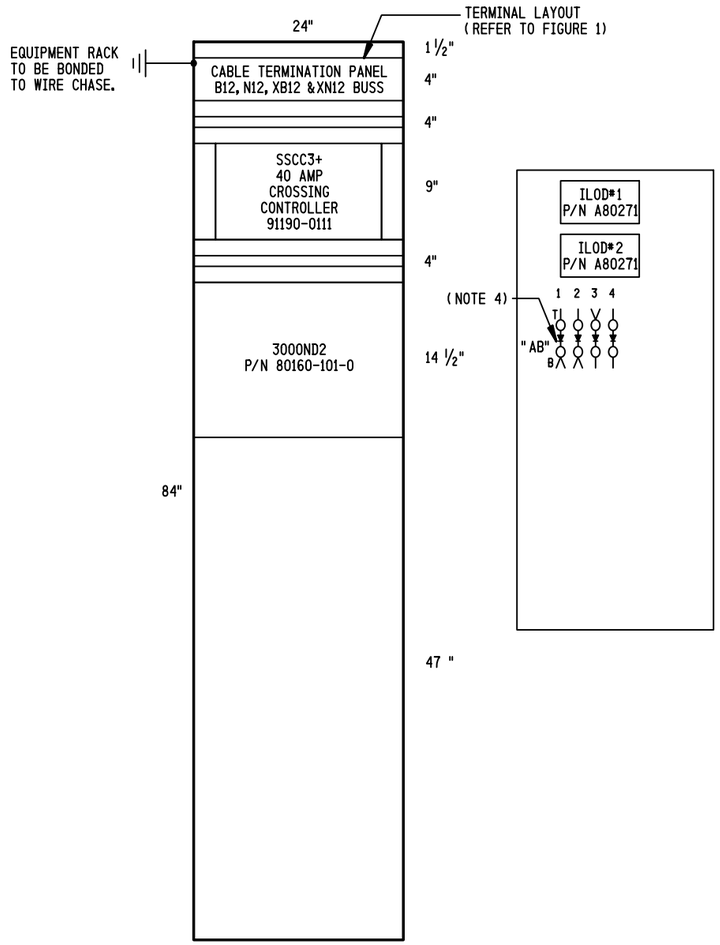

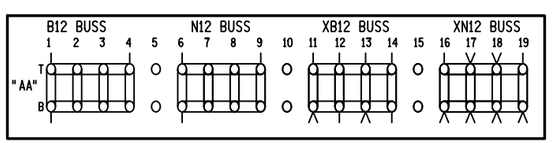

TERMINAL LAYOUT
FIGURE 1

SIDE" A"

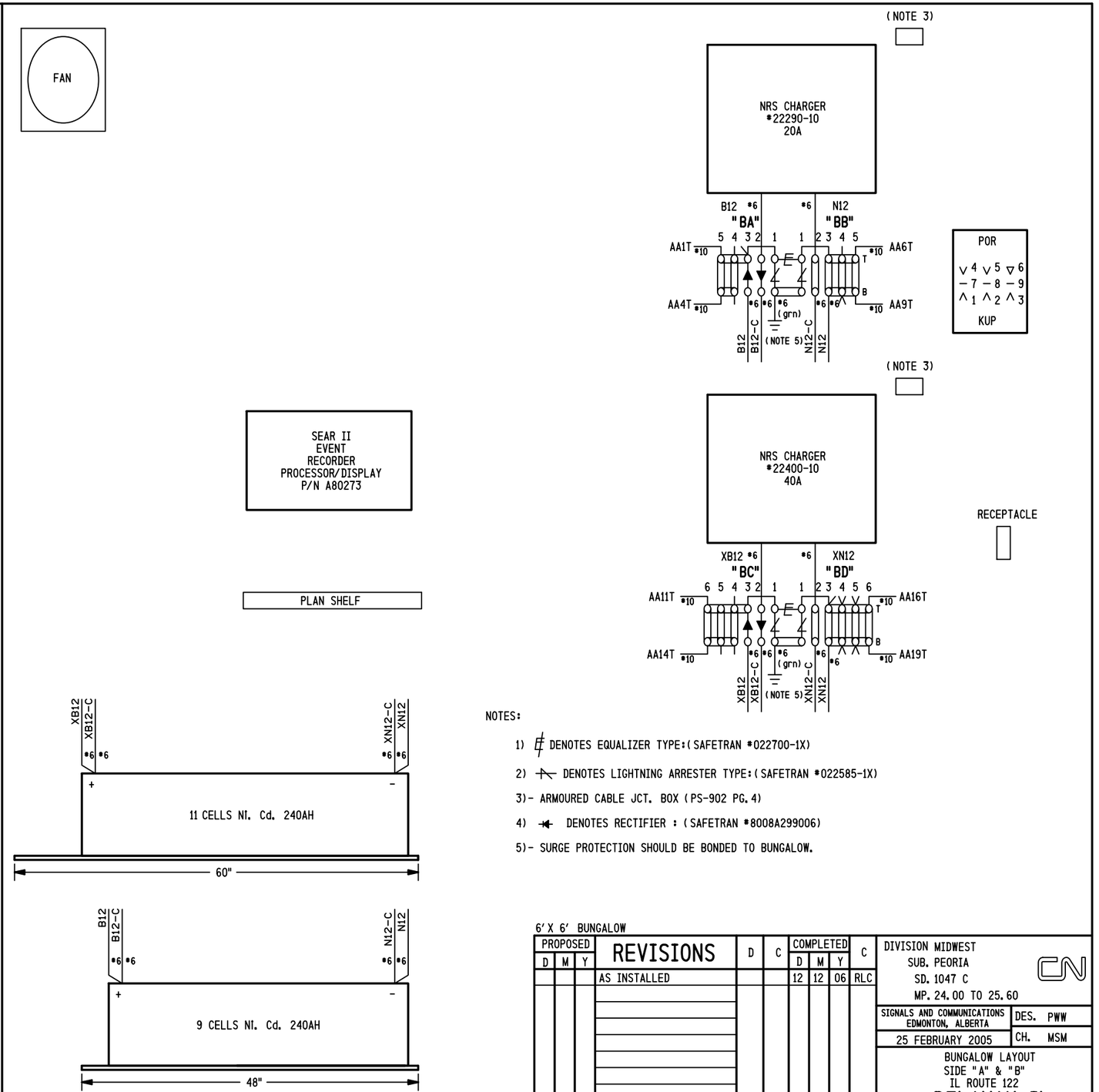

NOTES:

1) DENOTES EQUALIZER TYPE:(SAFETRAN *022700-1X)

2) DENOTES LIGHTNING ARRESTER TYPE:(SAFETRAN *022585-1X)

3)- ARMOURED CABLE JCT. BOX (PS-902 PG.4)

4) DENOTES RECTIFIER : (SAFETRAN *8008A299006)

5)- SURGE PROTECTION SHOULD BE BONDED TO BUNGALOW.

SIDE" B"

6' X 6' BUNGALOW

PROPOSED D	PROPOSED M	PROPOSED Y	REVISIONS	D	C	COMPLETED D	COMPLETED M	COMPLETED Y	C
			AS INSTALLED			12	12	06	RLC

DIVISION MIDWEST
SUB. PEORIA
SD. 1047 C
MP. 24.00 TO 25.60

SIGNALS AND COMMUNICATIONS
EDMONTON, ALBERTA

DES. PWW
CH. MSM

25 FEBRUARY 2005

BUNGALOW LAYOUT
SIDE "A" & "B"
IL ROUTE 122

DELAVAN, IL

M 02400C02

SAFETRAN SYSTEM CORP.
LOUISVILLE DIVISION, LOUISVILLE, KY

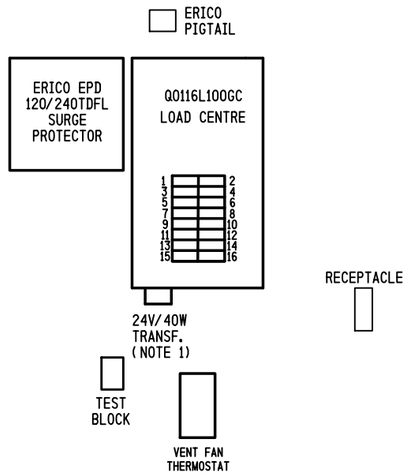

NOTE:
1) 24V-40W TRANSFORMER (CN STOCK #02-45-367)

SIDE "C"

6' X 6' BUNGALOW

PROPOSED D	PROPOSED M	PROPOSED Y	REVISIONS	D	C	COMPLETED D	COMPLETED M	COMPLETED Y	C
			AS INSTALLED			12	12	06	RLC

DIVISION MIDWEST
SUB. PEORIA
SD. 1047 C
MP. 24.00 TO 25.60

SIGNALS AND COMMUNICATIONS
EDMONTON, ALBERTA

DES. PWW
CH. MSM

25 FEBRUARY 2005

BUNGALOW LAYOUT
SIDE "C" & LINE CIRCUITS.
IL ROUTE 122

DELAVAN, IL

M 02400C03

SAFETRAN SYSTEM CORP.
LOUISVILLE DIVISION, LOUISVILLE, KY

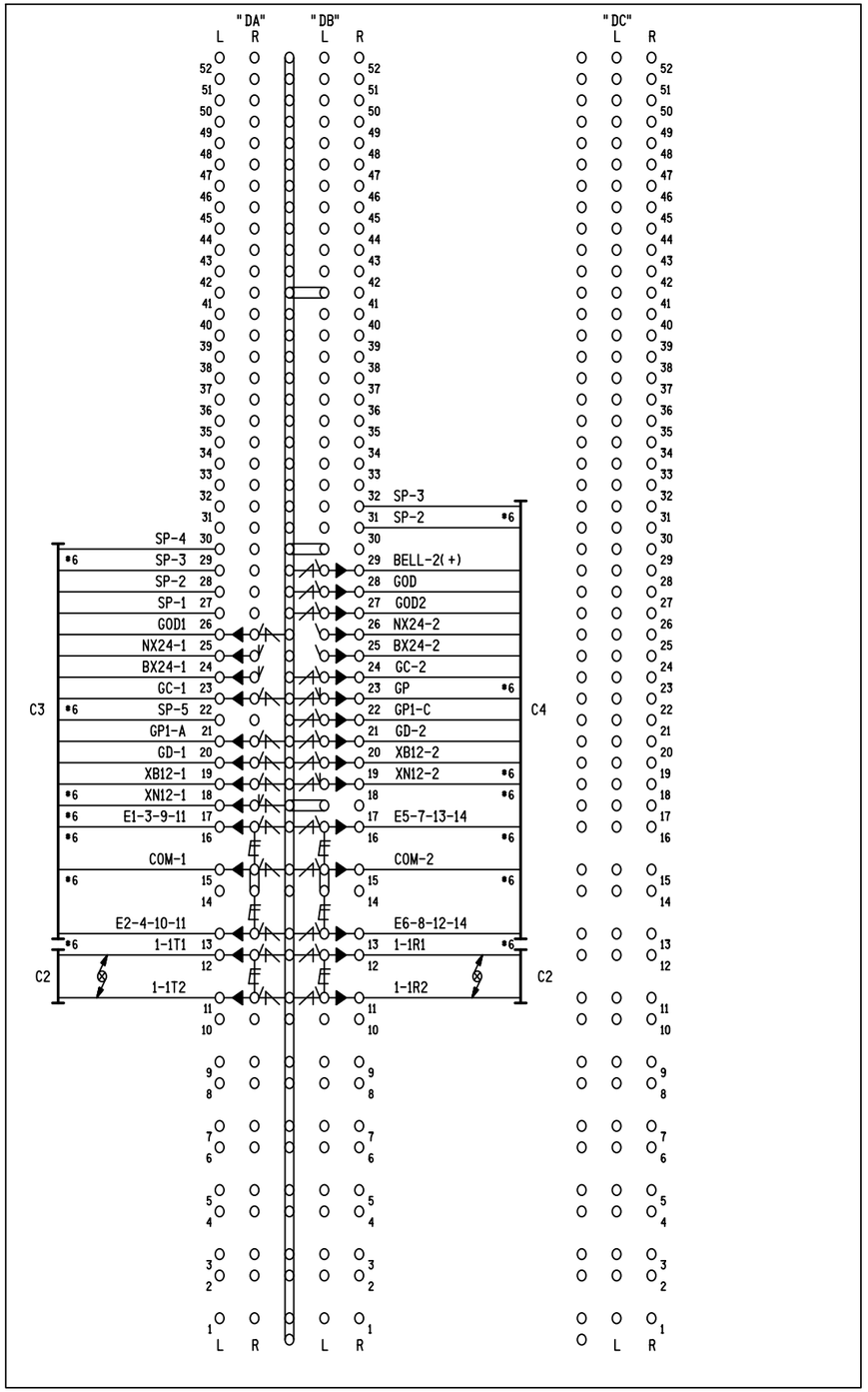

SIDE "D" (INSIDE)

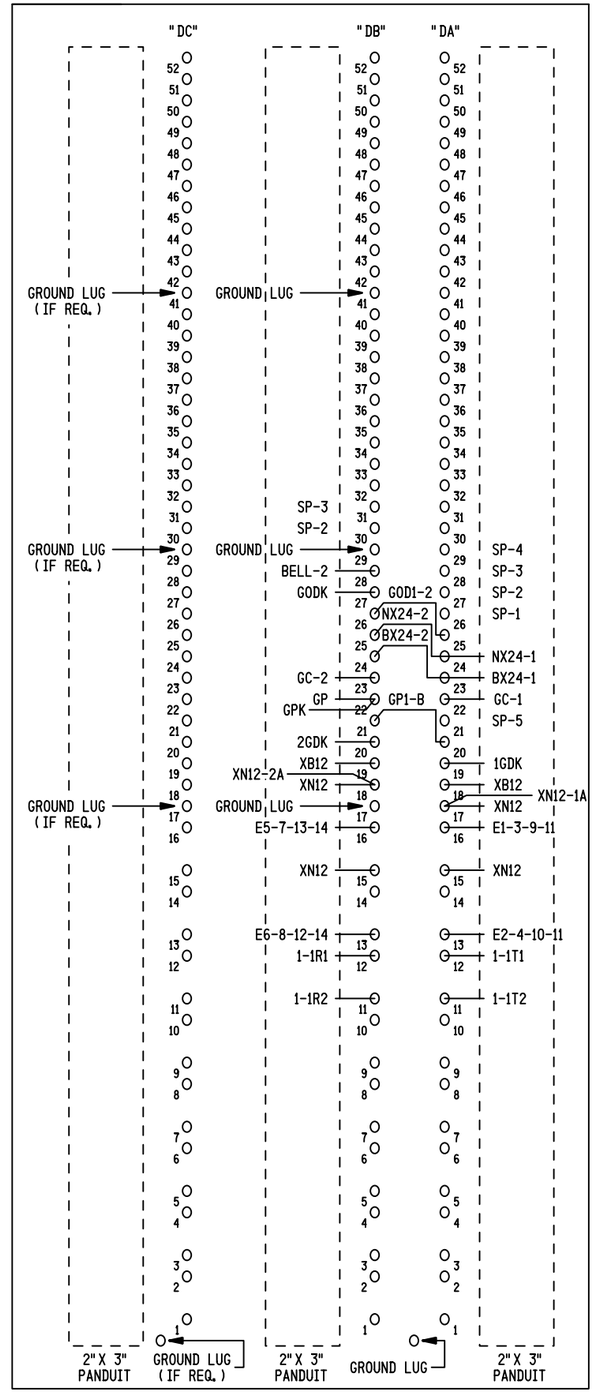

SIDE "D" (OUTSIDE)

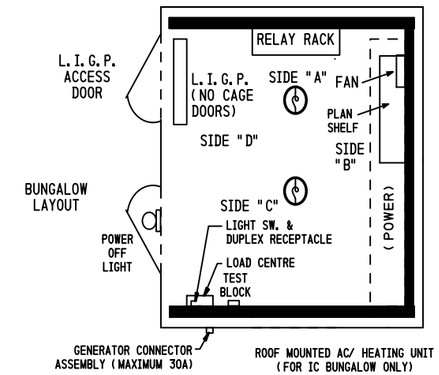

CABLE CONSIST:

C1- 3C*6 TECK 90 U/G TO MAIN SERVICE
C2- (2)-2SC*6 TW. TO TRACK
C3-16C (7*6,9*14) TO GATE (SIG.*1)
C4-16C (7*6,9*14) TO GATE (SIG.*2)

NOTES:

1) DENOTES LIGHTNING ARRESTER TYPE:(SAFETRAN *022585-1X)
2) DENOTES EQUALIZER TYPE:(SAFETRAN *022700-1X)
3) DENOTES TWISTED PAIR.
4) ENSURE DOUBLE NUTTING OF ALL TERMINALS.

6' X 6' BUNGALOW

PROPOSED D	PROPOSED M	PROPOSED Y	REVISIONS	D	C	COMPLETED D	COMPLETED M	COMPLETED Y	C
			AS INSTALLED			12	12	06	RLC

DIVISION MIDWEST
SUB. PEORIA
SD. 1047 C
MP. 24.00 TO 25.60

SIGNALS AND COMMUNICATIONS
EDMONTON, ALBERTA

DES. PWW
CH. MSM

25 FEBRUARY 2005

BUNGALOW LAYOUT SIDE "D"
LOW IMPEDANCE GROUND PLANE
IL ROUTE 122

DELAVAN, IL

M 02400C04

SAFETRAN SYSTEM CORP.
LOUISVILLE DIVISION, LOUISVILLE, KY

NOTES:-

1) ALL WIRING #16 AWG MINIMUM UNLESS OTHERWISE NOTED. WIRE SIZES SHOWN ARE MINIMUM GAUGE.

2) DENOTES TWISTED PAIR.

3) SELECT ISLAND OPERATING FREQUENCY OF MODULE #80211 BY PLACING THE SHORTING BLOCK ACROSS THE APPROPRIATE PAIR OF PINS ON THE FREQUENCY SELECTION 16 POSITION HEADER BLOCK.

4) IPI MODULE PROGRAMMABLE PICKUP DELAY IS FACTORY SET TO "0" SECONDS (SHORTING BLOCKS INSTALLED ACROSS PAIR OF PINS "A" AND "B" ON THE FREQUENCY SELECTION 16 POSITION HEADER BLOCK) SET PICKUP DELAY TIME TO "2" SECONDS BY REMOVING SHORTING BLOCK ACROSS PAIR OF PINS "B".

5) DENOTES BELDEN CABLE FOR ALL ECHELON AND LAN WIRING.

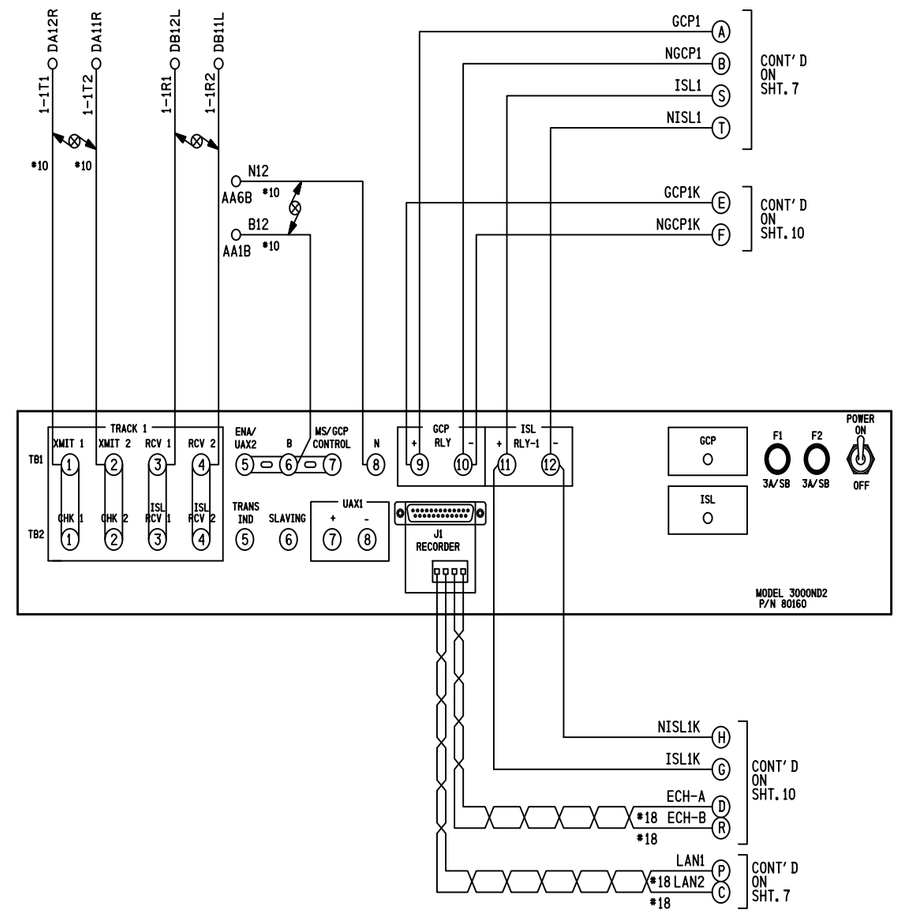

MODULES REQUIRED - 3000ND2

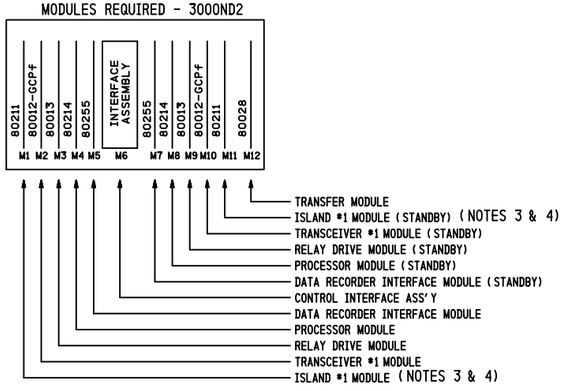

6' X 6' BUNGALOW

PROPOSED D	PROPOSED M	PROPOSED Y	REVISIONS	D	C	COMPLETED D	COMPLETED M	COMPLETED Y	C
			AS INSTALLED			12	12	06	RLC

DIVISION MIDWEST
SUB. PEORIA
SD. 1047 C
MP. 24.00 TO 25.60

SIGNALS AND COMMUNICATIONS
EDMONTON, ALBERTA

DES. PWW
CH. MSM

25 FEBRUARY 2005

MICRO GCP 3000ND2
1 TRACK (STANDBY)
IL ROUTE 122

DELAVAN, IL

M 02400C05

SAFETRAN SYSTEM CORP.
LOUISVILLE DIVISION, LOUISVILLE, KY

REVISIONS			
NO.	DATE	BY	DESCRIPTION	APP. BY
1				
2				
3				
4				
5				

■ PRESS PROGRAM KEY

N	S				
☐	☐	NUMBER OF TRACKS (TRANSCEIVER MODULES)	1 ☑	2 ☐	
☐	☐	FREQUENCY (MS/GCP)	T1: 285		Hz
			T2: N/A		Hz
☐	☐	UNIDIRECTIONAL/BIDIRECTIONAL	T1: UNI ☐	BI ☑	
			T2: UNI ☐	BI ☐	
☐	☐	XMIT LEVEL	T1: MAX ☑	MED ☐	
			T2: MAX ☐	MED ☐	
☐	☐	PREDICTOR/MOTION SENSOR	T1: PRED ☑	MS ☐	
			T2: PRED ☐	MS ☐	
☐	☐	WARNING TIME SELECTED	T1: 30 25		SEC.
			T2: N/A		SEC.
☐	☐	APPROACH DISTANCE SELECTED (NOTES 2, 4 & 6)	T1: 1550 2566		FT.
			T2: N/A		FT.
		APPROACH DISTANCE COMPUTED (NOTES 1, 4, 6 & 9)	T1: ____ (NORMAL)	____ (STANDBY)	FT.
			T2: N/A (NORMAL)	N/A (STANDBY)	FT.
☐	☐	UAX PICKUP DELAY (UAX 1) (0 = OFF)	0		SEC.
☐	☐	ENA / UAX2 DELAY (0 = ENA)	0		SEC.
☐	☐	ISLAND DISTANCE (BETWEEN ISLAND TRACK WIRE CONNECTIONS) (NOTES 2, 4 & 6)	T1: 120		FT.
			T2: N/A		FT.
☐	☐	NUMBER OF DAXS	0 ☑	1 ☐	2 ☐ 3 ☐ 4 ☐
☐	☐	DAX A TRACK ASSIGNMENT	T1 ☐	T2 ☐	
☐	☐	DAX A DISTANCE (0 = PREEMPT) (NOTES 2, 4 & 6)	N/A		FT.
☐	☐	DAX A WARNING TIME	N/A		SEC.

■ PRESS PROGRAM KEY

N	S				
☐	☐	DAX B TRACK ASSIGNMENT	T1 ☐	T2 ☐	
☐	☐	DAX B DISTANCE (0 = PREEMPT) (NOTES 2, 4 & 6)	N/A		FT.
☐	☐	DAX B WARNING TIME	N/A		SEC.
☐	☐	DAX C TRACK ASSIGNMENT	T1 ☐	T2 ☐	
☐	☐	DAX C DISTANCE (0 = PREEMPT) (NOTES 2, 4 & 6)	N/A		FT.
☐	☐	DAX C WARNING TIME	N/A		SEC.
☐	☐	DAX D TRACK ASSIGNMENT	T1 ☐	T2 ☐	
☐	☐	DAX D DISTANCE (0 = PREEMPT) (NOTES 2, 4 & 6)	N/A		FT.
☐	☐	DAX D WARNING TIME	N/A		SEC.
☐	☐	SLAVING MASTER/SLAVE	MASTER ☑	SLAVE ☐	
☐	☐	PASSWORD ENABLED	DISABLED ☐		
			ENABLED ☑		
☐	☐	RECORDER INSTALLED (NOTE 11)	NOT INSTALLED ☐		
			INSTALLED ☑		
		EXTERNAL NODE # (NOTE 11)	6 (NORMAL)	16 (STANDBY)	
☐	☐	RS-232-C BAUD RATE	9600		BPS
☐	☐	RS-232-C DATA BITS	7 ☑	8 ☐	
☐	☐	RS-232-C STOP BITS	1 ☐	2 ☑	
☐	☐	RS-232-C PARITY	NONE ☑	MARK ☐	
			ODD ☐	SPACE ☐	
			EVEN ☐		
☐	☐	DATE (E.G., MON 16 NOV 1987) (NOTE 2)			
☐	☐	TIME (E.G., 11:25:43 AM) (NOTE 2)			
☐	☐	DAYLIGHT SAVINGS	ON ☑	OFF ☐	

■ PRESS FUNCTION KEY

N	S				
☐	☐	SWITCH TO MS (ENTER EZ VALUE) (NOTES 2, 4 & 5)	T1: 18 11		EZ
			T2: N/A		EZ
☐	☐	TRANSFER DELAY MS TO GCP (0 = OFF)	T1: 50		SEC.
			T2: N/A		SEC.
☐	☐	TRANSFER MS TO GCP PRIME (WHEN PRIME PREDICTION OFFSET IS ON)	T1: ON ☐	OFF ☐	
			T2: ON ☐	OFF ☐	
☐	☐	TRANSFER MS TO GCP DAX A	T1: ON ☐	OFF ☐	
			T2: ON ☐	OFF ☐	
☐	☐	TRANSFER MS TO GCP DAX B	T1: ON ☐	OFF ☐	
			T2: ON ☐	OFF ☐	
☐	☐	TRANSFER MS TO GCP DAX C	T1: ON ☐	OFF ☐	
			T2: ON ☐	OFF ☐	
☐	☐	TRANSFER MS TO GCP DAX D	T1: ON ☐	OFF ☐	
			T2: ON ☐	OFF ☐	
☐	☐	PRIME PREDICTION OFFSET (0 = OFF) (NOTES 2, 4 & 6)	T1: 0		FT.
			T2: N/A		FT.
☐	☐	PICKUP DELAY PRIME	AUTOMATIC ☐	FIXED ☑	25 30 SEC.
☐	☐	PICKUP DELAY DAX A	AUTOMATIC ☐	FIXED ☐	N/A SEC.
☐	☐	PICKUP DELAY DAX B	AUTOMATIC ☐	FIXED ☐	N/A SEC.
☐	☐	PICKUP DELAY DAX C	AUTOMATIC ☐	FIXED ☐	N/A SEC.
☐	☐	PICKUP DELAY DAX D	AUTOMATIC ☐	FIXED ☐	N/A SEC.
☐	☐	COMPENSATION VALUE (NOTES 3 & 4)	T1: ____ (NORMAL)	____ (STANDBY)	
☐	☐	COMPENSATION VALUE (NOTES 3 & 4)	T2: N/A (NORMAL)	N/A (STANDBY)	

EXPANDED PROGRAMMING

■ PRESS FUNCTION KEY

N	S				
☐	☐	ENHANCED DETECTION (ED) (NOTES 6 & 9)	T1: ON ☑	OFF ☐	
			T2: ON ☐	OFF ☐	
☐	☐	BACK TO BACK T1 & T2 (WHEN ED DETECTION IS ON)	NO ☑	YES ☐	
☐	☐	STATION STOP TIMER (WHEN ENHANCED DETECTION IS ON)	T1: 10		SEC.
			T2: N/A		SEC.
☐	☐	NUMBER OF TRACK WIRES	T1: 4 ☑	6 ☐	
			T2: 4 ☐	6 ☐	
☐	☐	LOW EX ADJUSTMENT (NOTES 2, 4, 6 & 7)	T1: 0		
			T2: N/A		
☐	☐	LOW EZ DETECTION (WHEN EZ=70)	T1: ON ☐	OFF ☑	
			T2: ON ☐	OFF ☐	
☐	☐	LOW EZ DETECTION TIMER (WHEN LOW EZ DETECTION IS ON) (NOTE 12)	T1: N/A		MIN.
			T2: N/A		MIN.
☐	☐	POSITIVE START (0 = OFF) (NOTES 2, 4, 6 & 10)	T1: 0		EZ
			T2: N/A		EZ
☐	☐	POSITIVE START TIMEOUT (0 = NONE) (WHEN POSITIVE START IS ON)	T1: N/A		MIN.
			T2: N/A		MIN.
☐	☐	SET "AT" OPERATION	NORMAL ☑	DIAGNOSTIC ☐	
☐	☐	DIAGNOSTIC MESSAGES	ON ☑	OFF ☐	
☐	☐	DAX MESSAGES	ON ☐	OFF ☑	
☐	☐	ADVANCE PREEMPT TIMER (0 = OFF)	0		SEC.
☐	☐	MOTION SENSING LEVEL (0 = NORMAL) (NOTES 2, 4 & 6)	T1: 0		%
			T2: N/A		%

EXPANDED PROGRAMMING

1) COMPUTED BY SYSTEM DURING CALIBRATION

2) PROGRAMMED AT INSTALLATION DURING CALIBRATION PROCEDURE

3) THE COMPENSATION VALUE IS PROVIDED BY THE 3000 GCP SYSTEM AND NO ADDITIONAL PROGRAMMING IS NORMALLY REQUIRED. DO NOT CHANGE VALUE WITHOUT PROPER INSTRUCTION

4) INDICATE READING OR SELECTION IN SPACE PROVIDED

5) EACH CONSTANT WARNING DEVICE SYSTEM TO BE PROGRAMMED TO CONVERT TO A MOTION SENSOR 300 FEET FROM EDGE OF ROAD TRAVELLED WAY.
SHUNT TRACK 300 FEET FROM EDGE OF ROAD TRAVELLED WAY AND NOTE "EZ" VALUE.
PROGRAM EACH SYSTEM WITH THE INDICATED "EZ" VALUE +2.

6) REFER TO MODEL 3000 GCP INSTRUCTION AND INSTALLATION MANUAL FOR PROGRAMMING PARAMETERS.

7) "LOW EX" THRESHOLD IS FACTORY PRESET AND NO ADDITIONAL PROGRAMMING IS NORMALLY REQUIRED.
IMPROPER REDUCTION OF THE "LOW EX" THRESHOLD MAY CAUSE REDUCTION IN WARNING TIME.
DO NOT CHANGE VALUE WITHOUT PROPER INSTRUCTION.

8) T1-ISLAND FREQUENCY TO BE PROGRAMMED AT 7.1 KHz
T2-ISLAND FREQUENCY TO BE PROGRAMMED AT N/A KHz

9) **SET UP APPROACH LENGTH AND LINEARIZATION CALIBRATION**
VERIFY THAT "ENHANCED DETECTION" MODE IS PROGRAMMED "OFF" BEFORE ATTEMPTING LINEARIZATION PROCEDURES.

10) AT EACH SIGNAL LOCATION THE CONSTANT WARNING DEVICE SYSTEM IS TO BE PROGRAMMED USING POSITIVE START FUNCTION.
SHUNT TRACK AT FEET FROM EDGE OF ROAD TRAVELLED WAY AND NOTE "EZ" VALUE.
PROGRAM THE SYSTEM WITH THE INDICATED "EZ" VALUE.

11) GCP/MS NODES MUST BE INSTALLED ON THE SEA/R BEFORE RECORDER MODULE 80255 CAN BE INSTALLED.

12) SET VALUE TO MATCH ACTUAL TRAIN MOVEMENT WITHIN THE CROSSING APPROACH CIRCUITS.

13) N ☐ DENOTES NORMAL GCP UNIT
S ☐ DENOTES STANDBY GCP UNIT

IRC 27 MAR 2013

PROPOSED
DESIGN NO. 10-0581
RED-IN YELLOW-OUT

AS INSTALLED
DATE _____
BY _____
(PRINT NAME)

6' X 6' BUNGALOW

PROPOSED D	PROPOSED M	PROPOSED Y	REVISIONS	D	C	COMPLETED D	COMPLETED M	COMPLETED Y	C
			AS INSTALLED			12	12	06	RLC
03	27	13	REVISED SPEED 30MPH	NAD	BJW				

DIVISION MIDWEST
SUB. PEORIA
SD. 1047 C
MP. 24.00 TO 25.60

SIGNALS AND COMMUNICATIONS
EDMONTON, ALBERTA
25 FEBRUARY 2005

DES. PWW
CH. MSM

GCP 3000ND2 (MODULE #80214)
PROGRAM DATA (LEVEL 9V121-02J)
IL ROUTE 122
DELAVAN, IL

M 02400C06

SAFETRAN SYSTEM CORP.
LOUISVILLE DIVISION, LOUISVILLE, KY

INVENSYS RAIL CORPORATION

DES. : NAD	DATE: 03/27/13	JOB NO. : PICA10369	
CKD. : BJW	ISSUE DATE: N/A	EST. NO. :N/A	
DRN. : NAD	PLAN NO. :N/A	SHEET N/A OF N/A	
P TIME:14:54	P DATE: 12-APR-2013	CAD ID. : 02400C06	

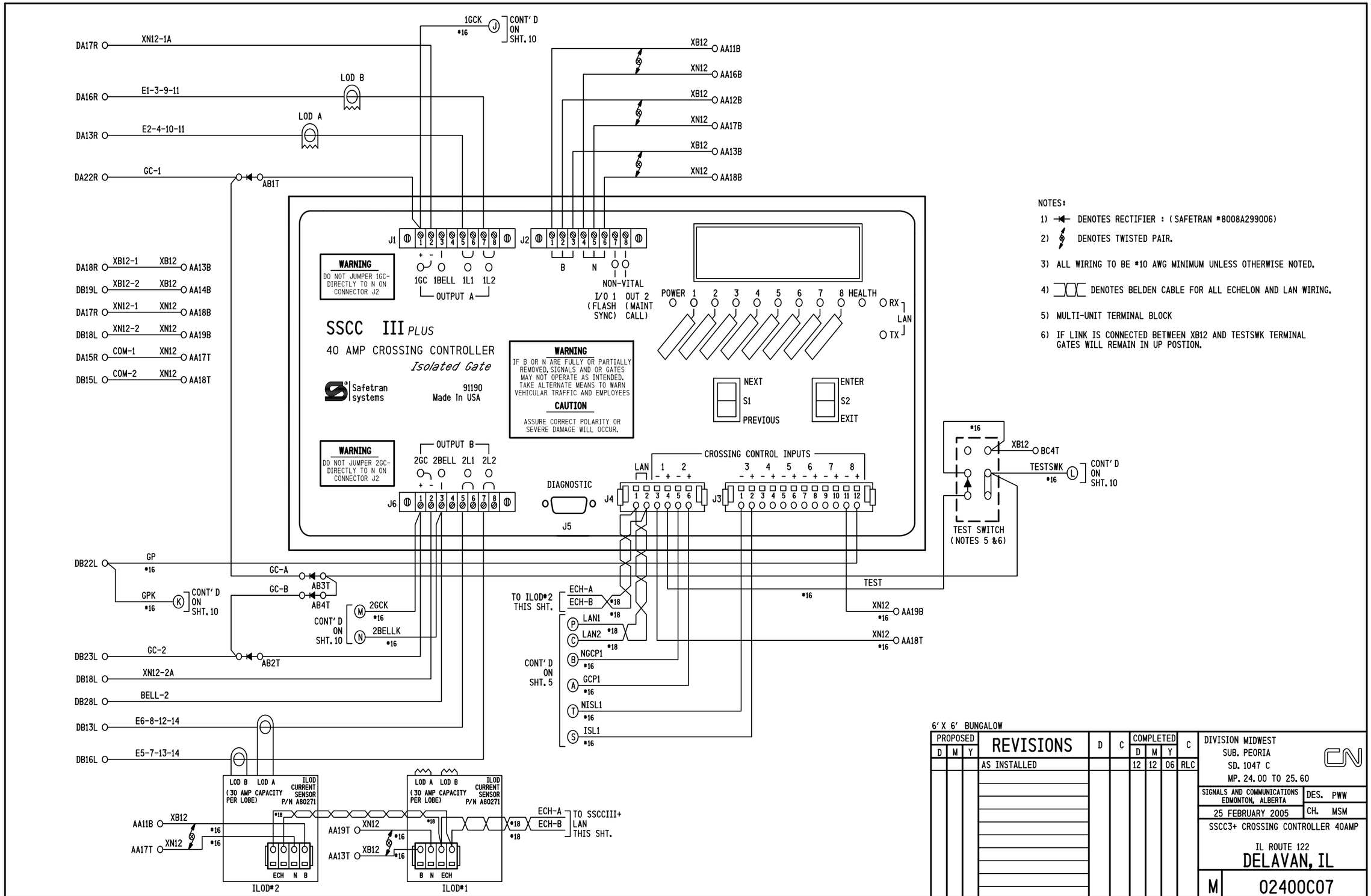

NOTES:

1) DENOTES RECTIFIER : (SAFETRAN #8008A299006)
2) DENOTES TWISTED PAIR.
3) ALL WIRING TO BE #10 AWG MINIMUM UNLESS OTHERWISE NOTED.
4) DENOTES BELDEN CABLE FOR ALL ECHELON AND LAN WIRING.
5) MULTI-UNIT TERMINAL BLOCK
6) IF LINK IS CONNECTED BETWEEN XB12 AND TESTSWK TERMINAL GATES WILL REMAIN IN UP POSTION.

6' X 6' BUNGALOW

PROPOSED D	PROPOSED M	PROPOSED Y	REVISIONS	D	C	COMPLETED D	COMPLETED M	COMPLETED Y	C
			AS INSTALLED			12	12	06	RLC

DIVISION MIDWEST
SUB. PEORIA
SD. 1047 C
MP. 24.00 TO 25.60

SIGNALS AND COMMUNICATIONS
EDMONTON, ALBERTA

DES. PWW
CH. MSM

25 FEBRUARY 2005

SSCC3+ CROSSING CONTROLLER 40AMP

IL ROUTE 122
DELAVAN, IL

M 02400C07

SAFETRAN SYSTEM CORP.
LOUISVILLE DIVISION, LOUISVILLE, KY

CROSSING CONTROLLER SSCCIII 40-AMPERE UNIT, 91190

PROGRAM	NOTES	INITIAL SETTING BY:_____ DATE:_____
FLASH RATE:	30-70 FLASHES/MINUTE DEFAULT = 50	55 FLASHES/MINUTE
GATES USED:	YES/NO DEFAULT = YES	☑ YES ☐ NO
1 GC DELAY:	3-20 SEC., DEFAULT = 4	3 SECONDS
2 GC DELAY (40 AMP UNIT):	3-20 SEC., DEFAULT = 4	3 SECONDS
GATE RISING BELL:	ON/OFF, DEFAULT = ON	☐ ON ☑ OFF
ENABLED INPUTS:	1 THRU 7 ONLY	☑1 ☑2 ☑3 ☐4 ☐5 ☐6 ☐7
GC2/I7:	GC2 NORMAL, I7 = NORMAL GC2 INVERTED, I7 = NORMAL GC2 PRMT RELAY, I7 = FDBK	☑ NORMAL ☐ INVERTED ☐ PRE-EMPT SIM ☐ PRE-EMPT ADV
ADV PRE-EMPT TIME (40A):	1-30 SEC., DEFAULT = 1	N/A SECONDS
MIN ACTIVATION TIME:	0-30 SEC., DEFAULT = 20	20 SECONDS
STICK RELEASE TIME:	5-30 MIN., DEFAULT = 15	N/A MINUTES
SUP ISLAND TIME:	5-20 MIN., DEFAULT = 20	N/A MINUTES
ENABLED OUTPUTS: (40 amp only)	DEFAULT = A + B	☑ A + B ☐ A ☐ B
DAYLIGHT SAVINGS:	DEFAULT = DISABLED	☑ ENABLED ☐ DISABLED
DATE:	N/A	☐ DATE SET
TIME:	24-FORMAT	☐ TIME SET
PASSWORD:	DEFAULT = DISABLED	☐ ENABLED ☑ DISABLED
CONFIGURE		
LOS TIMERS:	0-20 SECONDS, INPUTS 1-7 ONLY DEFAULT = 0	1: 0 SEC 5: 0 SEC 2: 0 SEC 6: 0 SEC 3: 0 SEC 7: 0 SEC 4: 0 SEC
MCF:		MCF: BASICPLS CRC:
ATCS ADDRESS:	DEFAULT = 700000000000	
LOW BATTERY:	9.0-15.0 VOLTS, OR DISABLED DEFAULT = DISABLED	☑ DISABLED ☐ ENABLED _____ VOLTS
AUX I/O:	DEFAULT = NONVITAL OUTPUT	☑ NV OUTPUT ☐ FLASH SYNC IN ☐ FLASH SYNC OUT
TEST CONFIGURE		
LAMP TEST CANCEL TIMER:	1-15 MINUTES, DEFAULT = 5	5 MINUTES
LAMP TEST DELAY TIMER:	30-120 SEC., DEFAULT = 30	30 SEC.
LAMP TEST ON TIMER:	15-60 SEC., DEFAULT = 15	15 SEC.

STANDARD SETUP LAMP VOLTAGES PROCEDURE
USING TRUE RMS AC+DC METER, OR CONVERSION TABLE BELOW

SETUP LAMP VOLTAGES	INITIAL SETTINGS BY:_____ DATE:_____ METER:_____
FAR GATE	1 L1 = _____ VOLTS 1 L2 = _____ VOLTS 2 L1 = _____ VOLTS 2 L2 = _____ VOLTS
SSCCIII+	1 L1 = _____ VOLTS 1 L2 = _____ VOLTS 2 L1 = _____ VOLTS 2 L2 = _____ VOLTS
NEAR GATE	1 L1 = _____ VOLTS 1 L2 = _____ VOLTS 2 L1 = _____ VOLTS 2 L2 = _____ VOLTS

MULTIMETER READING VARIANCE FROM ACTUAL LAMP VOLTAGE

BATTERY BANK VOLTAGE	VALID LAMP OUTPUT RANGE (In volts)	DIGITAL METER (FLUKE 87 OR EQUIVALENT)	ANALOG METER (SIMPSON 260 OR TS111)
13.3	9.0 TO 12.0	1.3 VOLTS BELOW ACTUAL VALUE	0.6 VOLTS BELOW ACTUAL VALUE
14.7	9.0 TO 12.0	2.2 VOLTS BELOW ACTUAL VALUE	1.1 VOLTS BELOW ACTUAL VALUE
15.8	9.0 TO 12.0	2.6 VOLTS BELOW ACTUAL VALUE	2.0 VOLTS BELOW ACTUAL VALUE

FOR LAMP OUTPUT SETTINGS GREATER THAN 12.0 VOLTS, REDUCE THE LISTED VALUES BY 30%
LAMP VOLTAGE MEASUREMENTS SHOULD BE ACCURATE TO 0.3 VOLTS.

SOFTWARE VERSION: 9V546-A01.K

6' X 6' BUNGALOW

PROPOSED D	PROPOSED M	PROPOSED Y	REVISIONS	D	C	COMPLETED D	COMPLETED M	COMPLETED Y	C
			AS INSTALLED			12	12	06	RLC

DIVISION MIDWEST
SUB. PEORIA
SD. 1047 C
MP. 24.00 TO 25.60

CN

SIGNALS AND COMMUNICATIONS
EDMONTON, ALBERTA

DES. PWW
CH. MSM

25 FEBRUARY 2005

SSCCIII+
PROGRAM DATA
IL ROUTE 122

DELAVAN, IL

M 02400C08

SAFETRAN SYSTEM CORP.
LOUISVILLE DIVISION, LOUISVILLE, KY

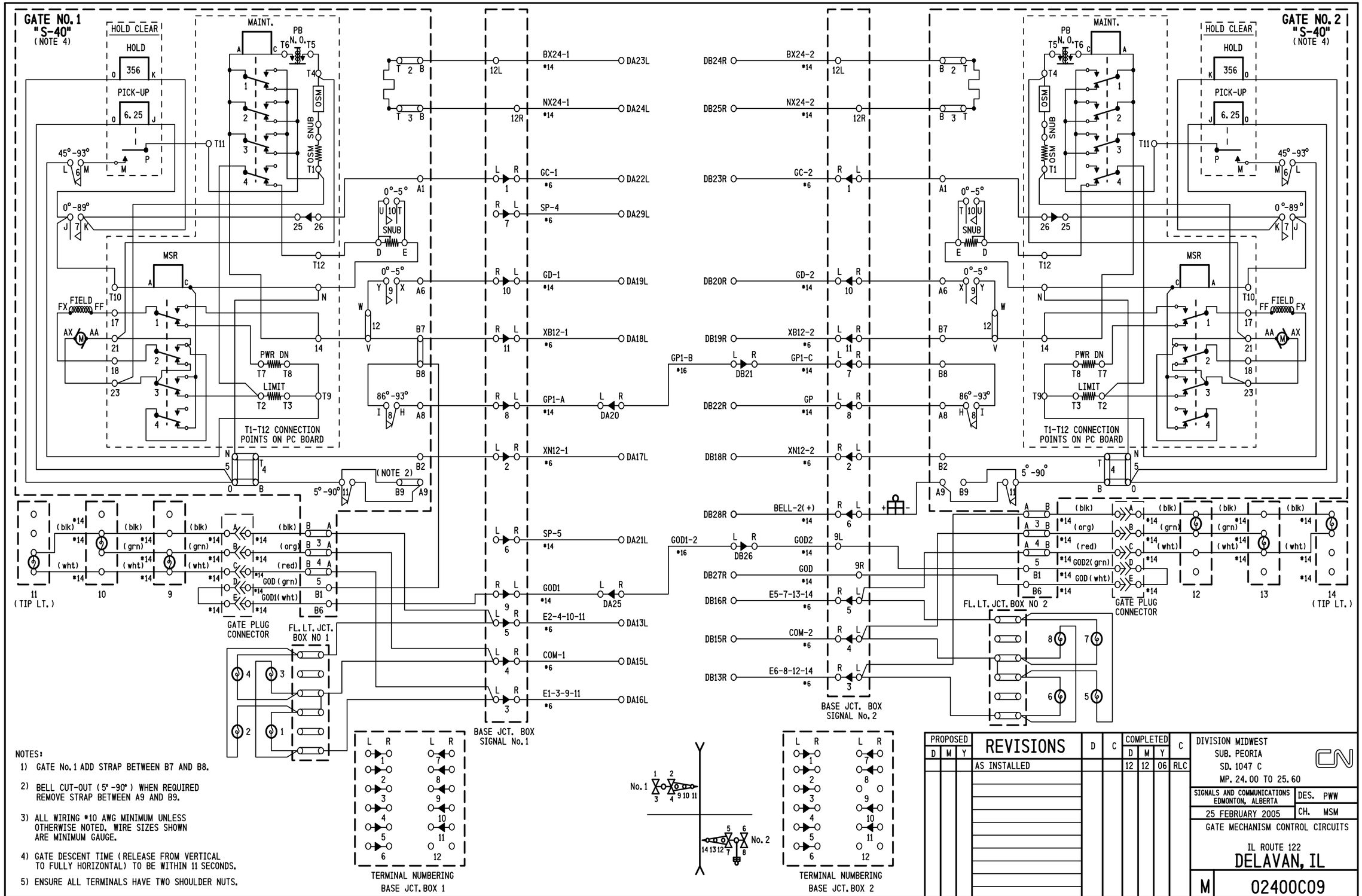

NOTES:

1) GATE No. 1 ADD STRAP BETWEEN B7 AND B8.

2) BELL CUT-OUT (5°-90°) WHEN REQUIRED REMOVE STRAP BETWEEN A9 AND B9.

3) ALL WIRING #10 AWG MINIMUM UNLESS OTHERWISE NOTED. WIRE SIZES SHOWN ARE MINIMUM GAUGE.

4) GATE DESCENT TIME (RELEASE FROM VERTICAL TO FULLY HORIZONTAL) TO BE WITHIN 11 SECONDS.

5) ENSURE ALL TERMINALS HAVE TWO SHOULDER NUTS.

PROPOSED D	PROPOSED M	PROPOSED Y	REVISIONS	D	C	COMPLETED D	COMPLETED M	COMPLETED Y	C
			AS INSTALLED			12	12	06	RLC

DIVISION MIDWEST
SUB. PEORIA
SD. 1047 C
MP. 24.00 TO 25.60

SIGNALS AND COMMUNICATIONS
EDMONTON, ALBERTA

DES. PWW
CH. MSM

25 FEBRUARY 2005

GATE MECHANISM CONTROL CIRCUITS

IL ROUTE 122
DELAVAN, IL

M 02400C09

SAFETRAN SYSTEM CORP.
LOUISVILLE DIVISION, LOUISVILLE, KY

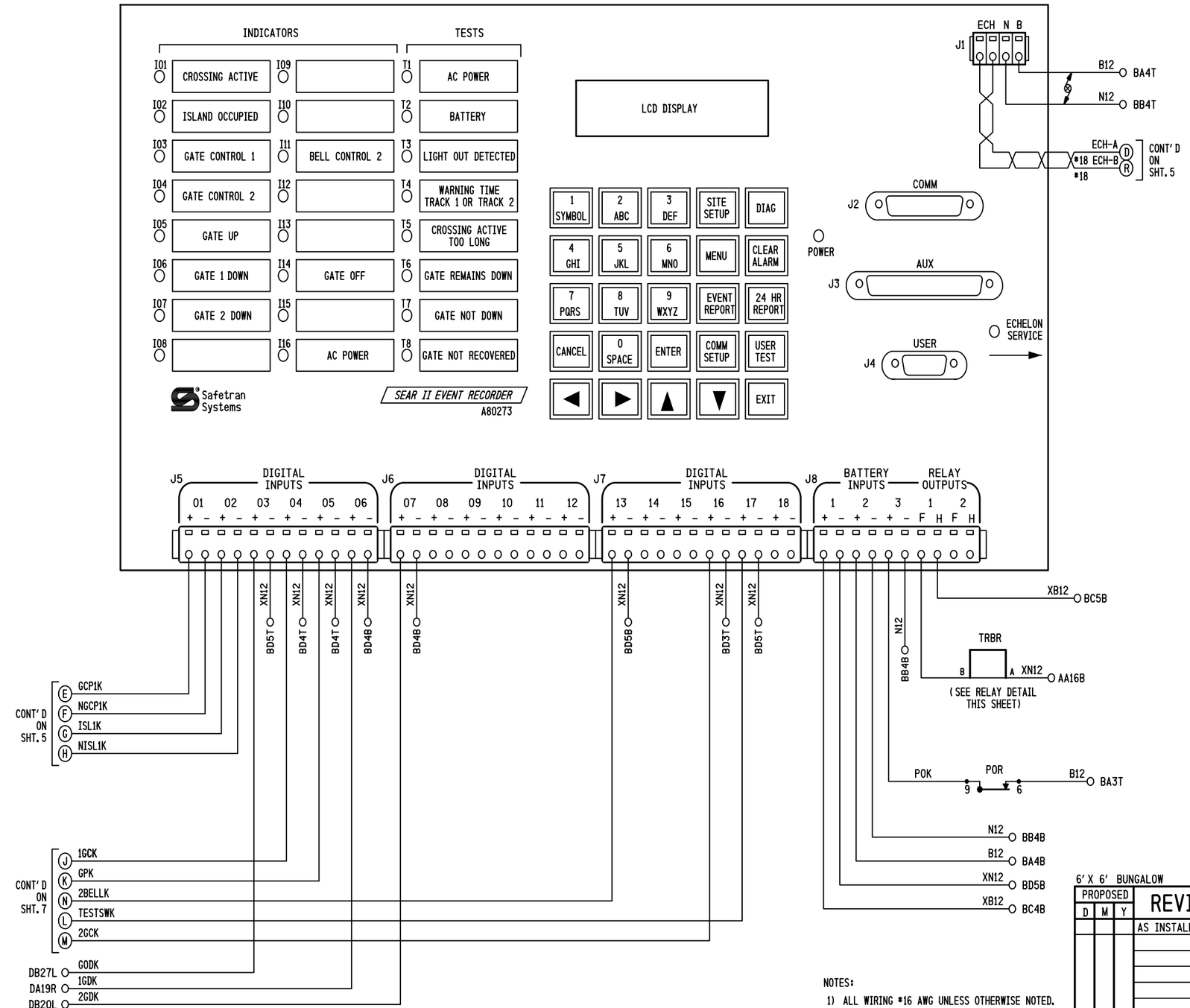

RELAY DETAIL

RELAY - POTTER & BRUMFIELD
MODEL KUMP-14D15-12 SOCKET MOUNTABLE
12 VDC W/ 3 FORM C CONTACTS.

SOCKET - SCREW TERMINAL
MODEL 27E121.

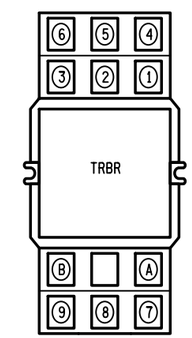

RELAY WIRING DIAGRAM (REAR VIEW)

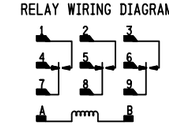

NOTE:
SOCKET NUMBERING CORRESPONDS DIRECTLY WITH RELAY NUMBERING.
(COIL SHOWN ENERGIZED)

NOTES:

1) ALL WIRING #16 AWG UNLESS OTHERWISE NOTED.

2) DENOTES TWISTED PAIR.

3) DENOTES BELDEN CABLE FOR ALL ECHELON AND LAN WIRING.

6' X 6' BUNGALOW

PROPOSED D	PROPOSED M	PROPOSED Y	REVISIONS	D	C	COMPLETED D	COMPLETED M	COMPLETED Y	C
			AS INSTALLED			12	12	06	RLC

DIVISION MIDWEST
SUB. PEORIA
SD. 1047 C
MP. 24.00 TO 25.60

SIGNALS AND COMMUNICATIONS
EDMONTON, ALBERTA

DES. PWW
CH. MSM

25 FEBRUARY 2005

SAFETRAN EVENT ANALYZER
RECORDER II (SEAR II)
IL ROUTE 122

DELAVAN, IL

M 02400C10

SAFETRAN SYSTEM CORP.
LOUISVILLE DIVISION, LOUISVILLE, KY

REVISIONS				
NO.	DATE	BY	DESCRIPTION	APP. BY
1				
2				
3				
4				
5				

MENU ITEMS

RESET NAMES/MODULES	NO
AC OFF ALARM TIME (minutes)	60 MIN.
MINIMUM WARNING TIME (seconds)	20 SEC.
DESIRED WARNING TIME (seconds)	25 30 SEC.
IGNORE WARNING TIMES BELOW (seconds)	3 SEC.
HOW MANY GATES?	2
GATE 1 DOWN	☐ NOT ENERGIZED ☑ ENERGIZED
GATE 2 DOWN	☐ NOT ENERGIZED ☑ ENERGIZED
GATE 3 DOWN	☑ NOT ENERGIZED ☐ ENERGIZED
GATE 4 DOWN	☑ NOT ENERGIZED ☐ ENERGIZED
HOW MANY SETS OF GCPS?	1
IF 1 SET IS SELECTED DOES GCP HAVE STANDBY?	YES
IF 2 SETS ARE SELECTED DOES 2ND GCP HAVE STANDBY?	N/A
HOW MANY ILODS?	2
IF 1 OR MORE IS SELECTED MINIMUM FLASH RATE	50
MINIMUM NORMAL VOLTAGE	10.5 VOLTS
GATE NOT DOWN ALARM TIME	15 SEC.
CROSSING ACTIVE ALARM AFTER	20 MIN.
DIGITAL INPUTS NAMES	DEFAULT
ALLOW DTMF CONTROL	NO

CURRENT SOFTWARE REVISION:

EXECUTIVE: 9V645A01.P APPLICATION: CN028A1.CDL

IRC 27 MAR 2013

PROPOSED

DESIGN NO. 10-0581

RED-IN YELLOW-OUT

AS INSTALLED

DATE _____

BY _____

(PRINT NAME)

DIGITAL INPUTS

DIGITAL INPUT	USAGE	LABEL	NORMAL LOGIC STATE
1	MD/GCP 1	MD/GCP1K /NMD/GCP1K	1
2	ISLAND 1	ISL1K/NISL1K	1
3	GATE OFF	GODK	1
4	GATE CONTROL 1	1GCK	1
5	GATE UP	GPK	1
6	GATE DOWN 1	1GDK	0 OR 1*
7	GATE DOWN 2	2GDK	0 OR 1*
8	BELL/LIGHTS 1	1BELLK	0
9	MD/GCP 2	MD/GCP2K /NMD/GCP2K	1
10	ISLAND 2	ISL2K/NISL2K	1
11	WRAP 1	1WAK	1
12	WRAP 2	2WAK	1
13	BELL/LIGHTS 2	2BELLK	0
14	GATE DOWN 3	3GDK	0 OR 1*
15	GATE DOWN 4	4GDK	0 OR 1*
16	GATE CONTROL 2	2GCK	1
17	TEST SWITCH	TESTSWK	0
18	DAX1	DAX1	1

*NOTE: DEPENDING ON THE DESIGN OF THE CIRCUIT

INDICATIONS

LED	LABEL	OFF=	ON=
01	CROSSING ACTIVE	MD/GCP1K OR MD/GCP2K OR XK OR ISL1K OR ISL2K DOWN	MD/GCP1K AND MD/GCP2K AND XK AND ISL1K AND ISL2K ALL UP
02	ISLAND OCCUPIED	ISLAND 1 & ISLAND 2 OCCUPIED	ISLAND 1 & ISLAND 2 NOT OCCUPIED
03	GATE CONTROL 1	1GCK OFF	1GCK ON
04	GATE CONTROL 2	2GCK OFF	2GCK ON
05	GATE UP	GPK OFF	GPK ON (GATE UP)
06**	GATE DOWN 1	1GDK OFF (GATE 1 NOT DOWN)	1GDK ON (GATE 1 DOWN)
07**	GATE DOWN 2	2GDK OFF (GATE 2 NOT DOWN)	2GDK ON (GATE 2 DOWN)
08**	GATE DOWN 3	3GDK OFF (GATE 3 NOT DOWN)	3GDK ON (GATE 3 DOWN)
09**	GATE DOWN 4	4GDK OFF (GATE 4 NOT DOWN)	4GDK ON (GATE 4 DOWN)
10	BELL CONTROL 1	1BELLK OFF	1BELLK ON
11	BELL CONTROL 2	2BELLK OFF	2BELLK ON
12	WRAP1	1WAK OFF	1WAK ON
13	WRAP2	2WAK OFF	2WAK ON
14	GATE OFF	GODK OFF	GODK ON
15	DAX	DAX1-4 OFF	DAX1-4 ON
16	AC POWER	POR OFF	POR ON

**NOTE: THE GATE DOWN LEDS WILL ALWAYS BE ON WHEN GATE IS DOWN. THE LOGIC TAKES CARE OF MAPPING NORMALLY-OPEN OR NORMALLY-CLOSED INPUTS TO TRUE AND FALSE CONDITIONS.

BATTERY INPUT CONFIGURATION

INPUT	USAGE	LABEL	NORMAL RANGE
1	LIGHT BATTERY	XB12/XN12	MINIMUM LEVEL - 18 VDC
2	STANDBY BATTERY	B12/N12	MINIMUM LEVEL - 18 VDC
3	POR	POR	POWER ON > 0.5 VDC

ALARM CONDITIONS

AC POWER ALARM (T1)

GREEN UPON START OF THE APPLICATION PROGRAM.
YELLOW FLASHING IF AC POWER IS LOST FOR LESS THAN AC OFF ALARM TIME.
YELLOW STEADY IF AC POWER LOST FOR LESS THAN AC OFF ALARM TIME AND THEN RESTORED.
RED FLASHING IF AC POWER IS LOST FOR AC OFF ALARM TIME OR MORE.
RED STEADY IF AC POWER LOST FOR AC ALARM TIME OR MORE AND THEN RESTORED FOR A MINIMUM OF 5 MINUTES.

BATTERY ALARM (T2)

GREEN UPON START OF THE APPLICATION PROGRAM.
YELLOW FLASHING IF BATT. POWER MOVES OUT OF RANGE, BUT NOT LONG ENOUGH FOR ALARM.
YELLOW STEADY IF BATT. POWER MOVED OUT OF RANGE, NO ALARM GENERATED AND IS NOW BACK IN RANGE.
RED FLASHING IF BATTERY HAS BEEN OUT OF RANGE FOR OVER 5 SECONDS.
RED STEADY IF POWER MOVED OUT OF RANGE, GENERATED ALARM AND IS NOW BACK IN RANGE FOR 10 SEC.

LIGHT OUT DETECTED (T3)

GREEN UPON START OF THE APPLICATION PROGRAM.
FLASHER FAILURE:
YELLOW FLASHING IF THE FLASH RATE OF ANY LAMP DURING THE LAST ACTIVATION IS ABOVE 65 FPM OR BELOW THE MENU SETTING OF 35 OR 55 FPM.
YELLOW STEADY IF THE FLASH RATE OF ANY LAMP WAS DETECTED OUTSIDE THE NORMAL RANGE BUT HAS SINCE RETURNED TO NORMAL.
BULB FAILURE:
RED FLASHING IF A BURNT BULB IS DETECTED.

WARNING TIME TRACK 1 OR TRACK 2 ALARM (T4)

GREEN UPON START OF THE APPLICATION PROGRAM.
YELLOW FLASHING IF LAST TRAIN BY CROSSING HAD A WARNING TIME LESS THAN DW BUT GREATER THAN MW.
YELLOW STEADY IF PRIOR TRAIN HAD A WARNING TIME LESS THAN DW AND LAST TRAIN HAD NORMAL WARNING TIME.
RED FLASHING IF LAST TRAIN BY CROSSING HAD A WARNING TIME ALARM (LESS THAN MW)
RED STEADY IF PRIOR TRAIN HAD ALARM AND LAST TRAIN HAD NO ALARM.

CROSSING ACTIVE TOO LONG (T5)

GREEN UPON START OF THE APPLICATION PROGRAM.
RED FLASHING IF CROSSING ACTIVE IS TRUE FOR USER SPECIFIED NUMBER OF MINUTES.
RED STEADY IF ALARM CONDITION OCCURRED AND IS CURRENTLY NOT IN ALARM.

GATE REMAINS DOWN ALARM (T6)

GREEN UPON START OF THE APPLICATION PROGRAM.
RED FLASHING IF CURRENTLY IN ALARM.
RED STEADY IF ALARM OCCURRED AND IS PRESENTLY CLEARED.

GATE NOT DOWN ALARM (T7)

GREEN UPON START OF THE APPLICATION PROGRAM.
RED FLASHING IF CURRENTLY IN ALARM.
RED STEADY IF ALARM OCCURRED AND IS PRESENTLY CLEARED AFTER PROPER GATE OPERATION.

GATE NOT RECOVERD ALARM (T8)

GREEN UPON START OF THE APPLICATION PROGRAM.
RED FLASHING IF GATE OFF.
YELLOW FLASHING IF CURRENTLY IN ALARM FOR GATE UP INPUT REMAINS LOW FOR >20 SEC. AFTER GCK ENERGIZED.
YELLOW STEADY IF ALARM OCCURRED AND IS PRESENTLY CLEARED.

TROUBLE INDICATION (RELAY OUTPUT 1 USED TO POWER TRBR RELAY)

WILL DROP TRBR IF ONE OF THE FOLLOWING IS OR WAS TRUE:
- LESS THAN MINIMUM WARNING TIME PROVIDED FOR TRAIN
- GATE NOT DOWN WHEN ISLAND OCCUPIED
- GATE DOES NOT RECOVER

USE CLEAR ALARM BUTTON TO RESET CONTACT AND RESTORE POWER TO THE TRBR RELAY

WILL DROP TRBR IF ONE OF THE FOLLOWING IS TRUE:
- AC POWER OFF MORE OVER AC ALARM OFF TIME
- BATTERY OUT OF RANGE FOR OVER 5 SECONDS
- CROSSING ACTIVE TOO LONG FOR LAST TRAIN
- GATE DOWN FOR OVER 20 MINUTES FOR LAST TRAIN
- GATE CAME DOWN SLOW FOR LAST TRAIN

6' X 6' BUNGALOW

PROPOSED D	PROPOSED M	PROPOSED Y	REVISIONS	D	C	COMPLETED D	COMPLETED M	COMPLETED Y	C
			AS INSTALLED			12	12	06	RLC
03	27	13	REVISED SPEED 30MPH	NAD	BJW				

DIVISION MIDWEST
SUB. PEORIA
SD. 1047 C
MP. 24.00 TO 25.60

CN

SIGNALS AND COMMUNICATIONS
EDMONTON, ALBERTA

DES. PWW
CH. MSM

25 FEBRUARY 2005

SEAR II
PROGRAM DATA
IL ROUTE 122

DELAVAN, IL

M 02400C11

SAFETRAN SYSTEM CORP.
LOUISVILLE DIVISION, LOUISVILLE, KY

INVENSYS RAIL CORPORATION

DES. : NAD	DATE: 03/27/13	JOB NO. : PICA10369	
CKD. : BJW	ISSUE DATE: N/A	EST. NO. :N/A	
DRN. : NAD	PLAN NO. :N/A	SHEET N/A OF N/A	
P TIME:14:54	P DATE: 12-APR-2013	CAD ID. : 02400C11	

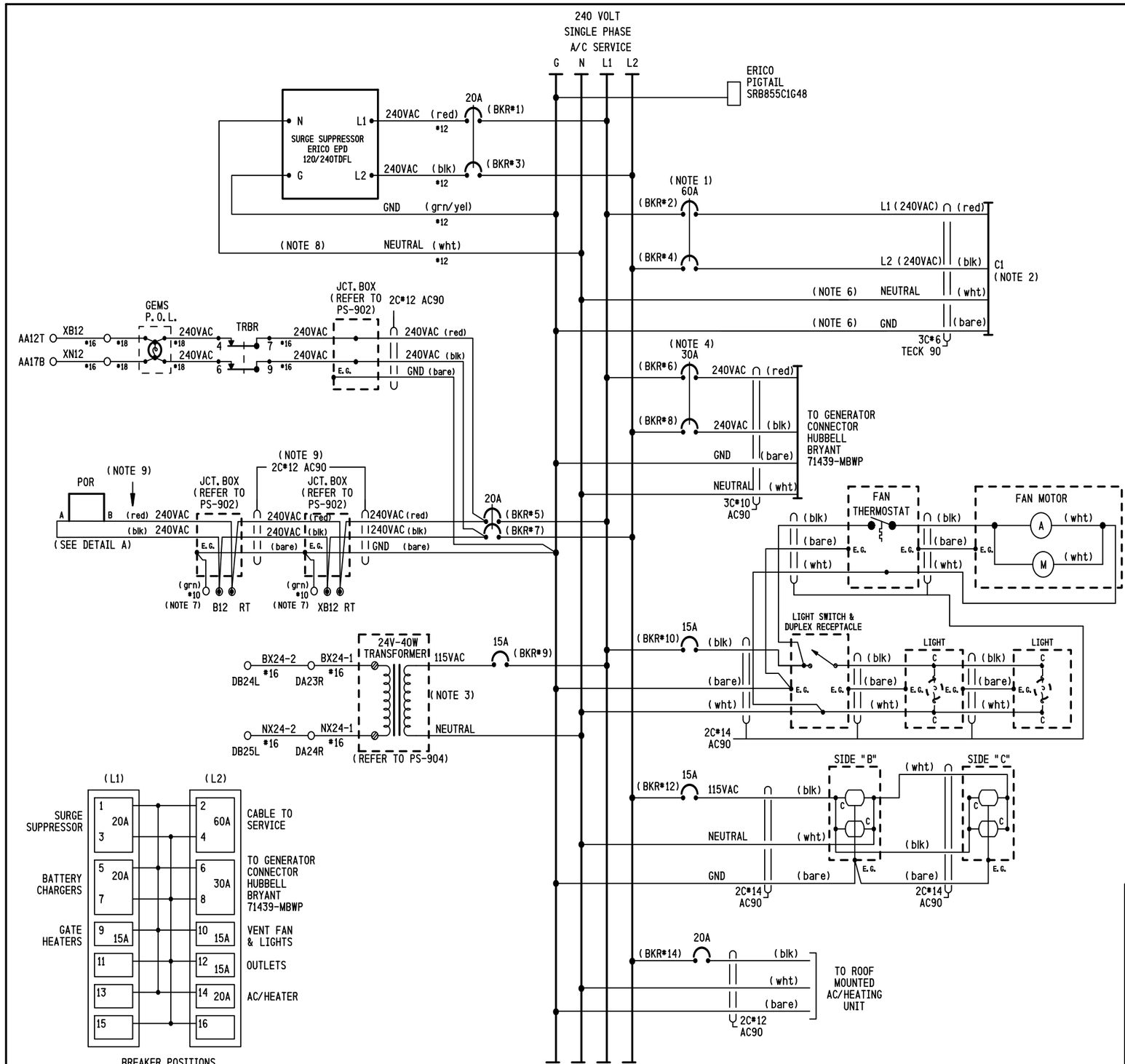

NOTES:

1) CIRCUIT BREAKER NOT TO EXCEED 60 AMPERES. RETAINING KIT PK4MB2LA MUST BE USED WITH 60A BREAKER.
2) FEEDER CIRCUIT BREAKER, AT STUB POLE SERVICE PANEL, NOT TO EXCEED 60 AMPERES.
3) 24 VOLT - 40 WATT TRANSFORMER (CN STOCK #02-45-367)
4) A SWITCH TRANSFER KIT MUST BE INSTALLED BETWEEN THE SERVICE DISCONNECT BREAKER AND THE GENERATOR HOOK UP.
5) WHERE SEPARATE GROUND WIRE EXISTS BETWEEN THE SERVICE AND THE LOAD CENTER, REMOVE THE BRASS COLORED BONDING SCREW. (REFER TO SCHEMATIC ON BOX COVER FOR EXACT LOCATION)
6) S.C.#6 STRANDED, CSA TYPE R90 (X-LINK)
7) GROUND LUG LOCATED ON CHARGER HOUSING.
8) KEEP LEADS AS SHORT AS POSSIBLE
9) THE WHITE CONDUCTOR MUST BE MADE PERMANENTLY UNIDENTIFIABLE BY TAPING THIS CONDUCTOR RED. TAPING MUST BE CONTINUOUS WHERE THE SEPARATE CONDUCTORS HAVE BEEN MADE ACCESSIBLE AND VISIBLE.

RELAY DETAIL A

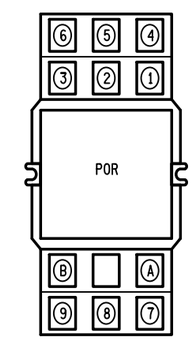

RELAY - POTTER & BRUMFIELD
MODEL KUP-14A15-240 SOCKET MOUNTABLE
240 VAC W/ 3 FORM C CONTACTS.

SOCKET - SCREW TERMINAL
MODEL 27E121

RELAY WIRING DIAGRAM (REAR VIEW)

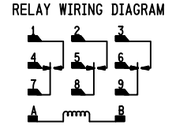

NOTE:
SOCKET NUMBERING CORRESPONDS DIRECTLY WITH RELAY NUMBERING.
(COIL SHOWN ENERGIZED)

6' X 6' BUNGALOW

PROPOSED D	M	Y	REVISIONS	D	C	COMPLETED D	M	Y	C
			AS INSTALLED			12	12	06	RLC

DIVISION MIDWEST
SUB. PEORIA
SD. 1047 C
MP. 24.00 TO 25.60

SIGNALS AND COMMUNICATIONS
EDMONTON, ALBERTA

DES. PWW
CH. MSM

25 FEBRUARY 2005

POWER DISTRIBUTION

IL ROUTE 122
DELAVAN, IL

M 02400C12

SAFETRAN SYSTEM CORP.
LOUISVILLE DIVISION, LOUISVILLE, KY

CALIBRATION HISTORY

INITIAL SET UP BY:_____ DATE:_____

80012 DC VOLTAGE READINGS AFTER CALIBRATION		CALIBRATION HISTORY				LINEARIZATION HISTORY (NOTE 1)													
		EZ/EX VALUES (TRACK UNOCCUPIED)				HARD WIRE SHUNT AT TERMINATION SHUNT						HARD WIRE SHUNT AT 50 PERCENT POINT OF SHUNT							
T1	T2	EZ		EX		EZ VALUE		EX VALUE		50 PERCENT OF EZ VALUE		NO LINEARIZATION				LINEARIZATION COMPLETE			
Z1=	Z1=											EZ VALUE		EX VALUE		STEP±		EZ	
Z2=	Z2=	NORMAL	STANDBY	NORMAL	STANDBY	NORMAL	STANDBY	NORMAL	STANDBY	NORMAL	STANDBY	NORMAL	STANDBY	NORMAL	STANDBY	NORMAL	STANDBY	NORMAL	STANDBY
WEST	TRACK 1	99		66		99			66			49.5		77		+6		49	
EAST	TRACK 1	99		66		92			69			46		71					
EAST	TRACK 2	N/A	N/A	N/A	N/A	N/A	N/A	N/A	N/A	N/A	N/A	N/A	N/A	N/A	N/A	N/A	N/A	N/A	N/A
WEST	TRACK 2	N/A	N/A	N/A	N/A	N/A	N/A	N/A	N/A	N/A	N/A	N/A	N/A	N/A	N/A	N/A	N/A	N/A	N/A

REVISION 1 BY:_____ DATE:_____

80012 DC VOLTAGE READINGS AFTER CALIBRATION		CALIBRATION HISTORY				LINEARIZATION HISTORY (NOTE 1)													
		EZ/EX VALUES (TRACK UNOCCUPIED)				HARD WIRE SHUNT AT TERMINATION SHUNT						HARD WIRE SHUNT AT 50 PERCENT POINT OF SHUNT							
T1	T2	EZ		EX		EZ VALUE		EX VALUE		50 PERCENT OF EZ VALUE		NO LINEARIZATION				LINEARIZATION COMPLETE			
Z1=	Z1=											EZ VALUE		EX VALUE		STEP±		EZ	
Z2=	Z2=	NORMAL	STANDBY	NORMAL	STANDBY	NORMAL	STANDBY	NORMAL	STANDBY	NORMAL	STANDBY	NORMAL	STANDBY	NORMAL	STANDBY	NORMAL	STANDBY	NORMAL	STANDBY
EAST	TRACK 1																		
WEST	TRACK 1																		
EAST	TRACK 2	N/A	N/A	N/A	N/A	N/A	N/A	N/A	N/A	N/A	N/A	N/A	N/A	N/A	N/A	N/A	N/A	N/A	N/A
WEST	TRACK 2	N/A	N/A	N/A	N/A	N/A	N/A	N/A	N/A	N/A	N/A	N/A	N/A	N/A	N/A	N/A	N/A	N/A	N/A

REVISION 2 BY:_____ DATE:_____

80012 DC VOLTAGE READINGS AFTER CALIBRATION		CALIBRATION HISTORY				LINEARIZATION HISTORY (NOTE 1)													
		EZ/EX VALUES (TRACK UNOCCUPIED)				HARD WIRE SHUNT AT TERMINATION SHUNT						HARD WIRE SHUNT AT 50 PERCENT POINT OF SHUNT							
T1	T2	EZ		EX		EZ VALUE		EX VALUE		50 PERCENT OF EZ VALUE		NO LINEARIZATION				LINEARIZATION COMPLETE			
Z1=	Z1=											EZ VALUE		EX VALUE		STEP±		EZ	
Z2=	Z2=	NORMAL	STANDBY	NORMAL	STANDBY	NORMAL	STANDBY	NORMAL	STANDBY	NORMAL	STANDBY	NORMAL	STANDBY	NORMAL	STANDBY	NORMAL	STANDBY	NORMAL	STANDBY
EAST	TRACK 1																		
WEST	TRACK 1																		
EAST	TRACK 2	N/A	N/A	N/A	N/A	N/A	N/A	N/A	N/A	N/A	N/A	N/A	N/A	N/A	N/A	N/A	N/A	N/A	N/A
WEST	TRACK 2	N/A	N/A	N/A	N/A	N/A	N/A	N/A	N/A	N/A	N/A	N/A	N/A	N/A	N/A	N/A	N/A	N/A	N/A

NOTES:

1) **SET UP APPROACH LENGTH AND LINEARIZATION CALIBRATION**
VERIFY THAT "ENHANCED DETECTION" MODE IS PROGRAMMED "OFF" BEFORE ATTEMPTING LINEARIZATION PROCEDURES.

6' X 6' BUNGALOW

PROPOSED D	PROPOSED M	PROPOSED Y	REVISIONS	D	C	COMPLETED D	COMPLETED M	COMPLETED Y	C
			AS INSTALLED			12	12	06	RLC

DIVISION MIDWEST
SUB. PEORIA
SD. 1047 C
MP. 24.00 TO 25.60

SIGNALS AND COMMUNICATIONS EDMONTON, ALBERTA
DES. PWW
CH. MSM
25 FEBRUARY 2005

GCP 3000ND2 (MODULE #80214)
CALIBRATION HISTORY
IL ROUTE 122
DELAVAN, IL

M 02400C13

SAFETRAN SYSTEM CORP.
LOUISVILLE DIVISION, LOUISVILLE, KY