CONTENT	SHEET #
TRACK LAYOUT	01
GCP 4000 SINGLE 1-TRACK MODULE & DISPLAY UNIT MODULE	02
GCP 4000 PROGRAM INFORMATION	03
GCP 4000 CALIBRATION HISTORY	04
B12 RECTIFIER CIRCUITS AND SURGE PANEL	05
AC DISTRIBUTION	06
CASE LAYOUT SIDE "A" & "B"	07

gil-094.80-01.dgn
30-JAN-2013

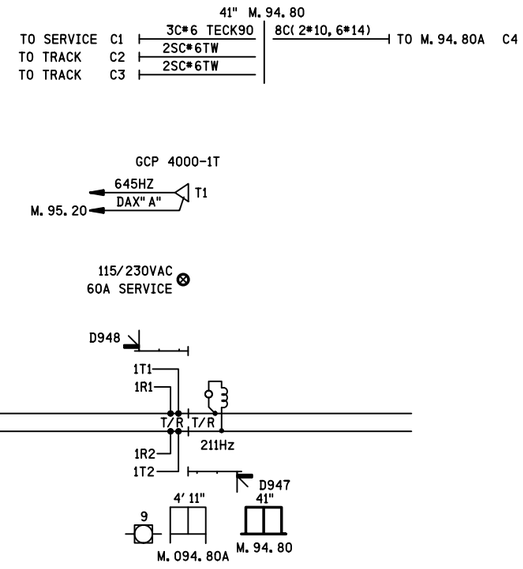

NOTE

DENOTES MULTI-FREQ. NARROW BAND SHUNT #62775-3497
WITH SIMULATED TRACK INDUCTOR 8V617-1000.

SELECTED SIMULATED TRACK INDUCTOR 8V617 IS BASED
ON LOCATION PLAN DISTANCE MEASUREMENT.
THIS DISTANCE MAY DIFFER FROM ACTUAL INSTALLATION.
ENSURE THE SELECTED UNIT MATCH INSTALLATION.

IRC 22 OCT 2012

PROPOSED
DESIGN NO. 12-0163
RED-IN YELLOW-OUT

AS INSTALLED
DATE _____
BY _____
(PRINT NAME)

41" HIGH CASE

PROPOSED D	PROPOSED M	PROPOSED Y	REVISIONS	D	C	COMPLETED D	COMPLETED M	COMPLETED Y	C

REGION SOUTHERN
SUB. GILMAN 349

SIGNALS AND COMMUNICATIONS HOMEWOOD
22 OCTOBER 2012
DES. NAD
CH. BJW

TRACK LAYOUT

ROBERTS, IL
REMOTE GCP

GIL-094.80-01

7

REVISIONS				
NO.	DATE	BY	DESCRIPTION	APP. BY
1				
2				
3				
4				
5				

INVENSYS RAIL CORPORATION

DES.: NAD	DATE: 10/22/12	JOB NO.: PICA10374	
CKD.: BJW	ISSUE DATE: N/A	EST. NO.: XP-6509	
DRN.: NAD	PLAN NO.: N/A	SHEET 1 OF 7	
P TIME: 09:42	P DATE: 30-JAN-2013	CAD ID.: GIL-094.80-01	

INVENSYS RAIL CORP.
LOUISVILLE DIVISION, LOUISVILLE, KY

REVISIONS				
NO.	DATE	BY	DESCRIPTION	APP. BY
1				
2				
3				
4				
5				

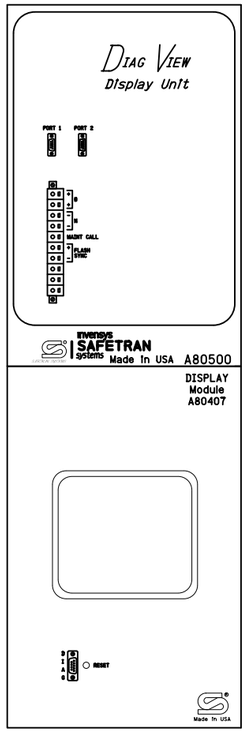

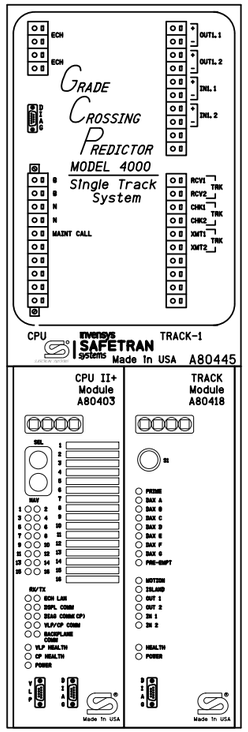

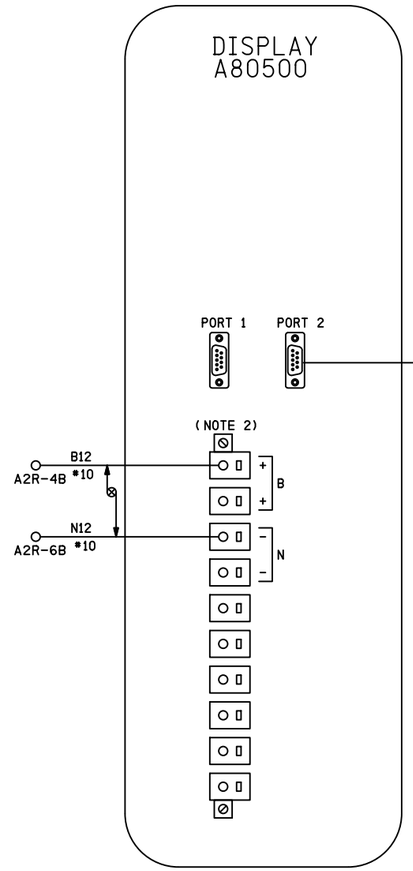

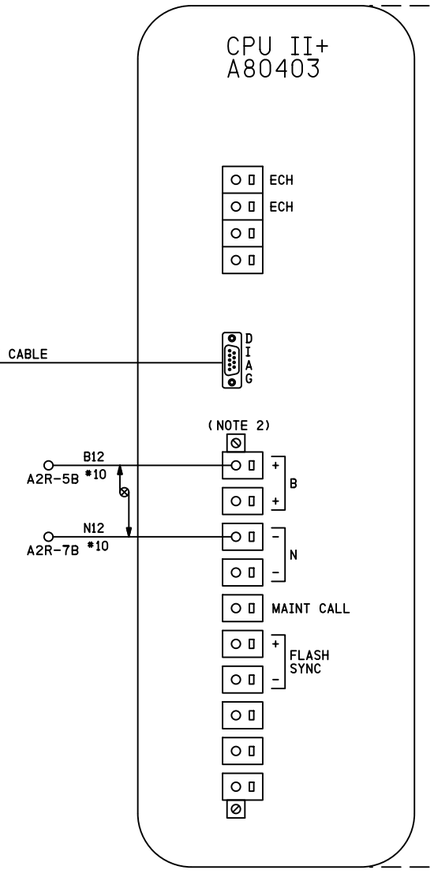

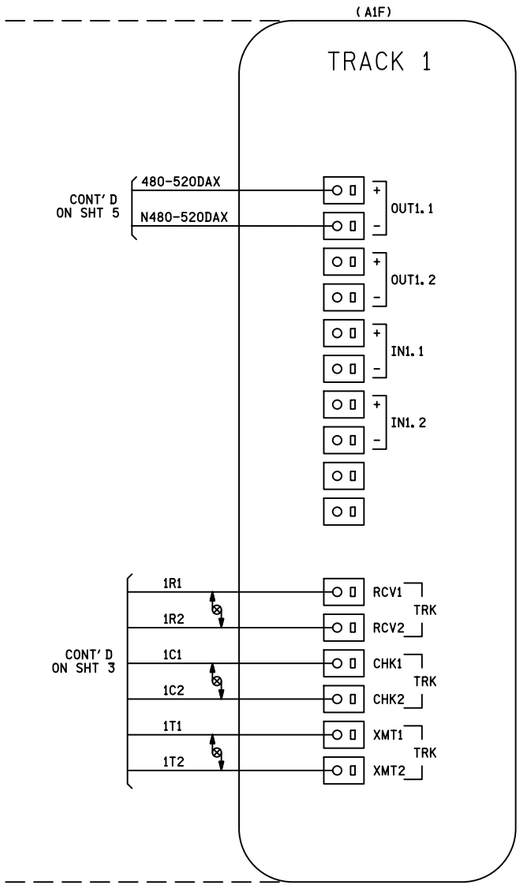

NOTES

1) DISABLE THE DISPLAY HEATER BY REMOVING JUMPER J-22 (LOCATED AT THE EDGE OF THE DISPLAY MODULE CARD THAT PLUGS INTO THE CHASSIS)

ATTENTION!

ENSURE THE DISPLAY MODULE HEATER IS DISABLED.
LEAVING THE DISPLAY HEATER ENABLE WILL REDUCE THE AMOUNT OF BATTERY STANDBY TIME IN THE EVENT OF AN AC POWER FAILURE

HEATER FUNCTION IS JUMPER SELECTABLE ON THE DISPLAY MODULE BOARD.
THREE OPTIONS ARE AVAILABLE
NORMAL LCD HTR (DEFAULT)
HI CURRENT
NO JUMPER (HEATER DISABLED)

IRC 22 OCT 2012

PROPOSED
DESIGN NO. 12-0163
RED-IN YELLOW-OUT

AS INSTALLED
DATE _____
BY _____
(PRINT NAME)

NOTES

1) ALL WIRING TO BE #16 AWG MINIMUM UNLESS OTHERWISE NOTED
2) ENSURE CONNECTIONS ARE SECURED IN PLACE BY SCREW LOCKING MECHANISM

DENOTES TWISTED PAIR

41" HIGH CASE

PROPOSED D	M	Y	REVISIONS	D	C	COMPLETED D	M	Y	C

REGION SOUTHERN
SUB. GILMAN 349

SIGNALS AND COMMUNICATIONS HOMEWOOD
DES. NAD
22 OCTOBER 2012
CH. BJW

GCP 4000 SINGLE 1-TRACK MODULE & DISPLAY UNIT MODULE
ROBERTS, IL
REMOTE GCP

GIL-094.80-02

INVENSYS RAIL CORPORATION		
DES.: NAD	DATE: 10/22/12	JOB NO.: PICA10374
CKD.: BJW	ISSUE DATE: N/A	EST. NO.: XP-6509
DRN.: NAD	PLAN NO.: N/A	SHEET 2 OF 7
P TIME: 09:42	P DATE: 30-JAN-2013	CAD ID.: GIL-094.80-02

INVENSYS RAIL CORP.
LOUISVILLE DIVISION, LOUISVILLE, KY

gil-094.80-02.dgn
30-JAN-2013

REVISIONS				
NO.	DATE	BY	DESCRIPTION	APP. BY
1				
2				
3				
4				
5				

Program Report

Location and SIN

DOT Number: 123456A
Milepost Number: 94.80
Site Name: 41 CASE

SIN: 762010010016

MCF and Template Selection

MCF Name: GCP-T6X-02-2.mcf
MCF Revision: 022
MCFCRC: 79225F13

Template = 4A:6 Remotes (OCCN)

Check Numbers

Office Check Number: 2DBA1D8E
Config. Check Number: 6218630F
(Based on MCF Revision 022)

Program

BASIC: module configuration
Track 1/PSO 1 Slot = Track (OCCN)
Track 2/RIO 1 Slot = Not Used (OCCN)
Track 3/PSO 2 Slot = Not Used (OCCN)
Track 4/PSO 3 Slot = Not Used (OCCN)
Track 5/RIO 2 Slot = Not Used (OCCN)
Track 6/RIO 3 Slot = Not Used (OCCN)
SSCC-1 Slot = Not Used (OCCN)
SSCC-2 Slot = Not Used (OCCN)
SEAR Used = No (OCCN)

BASIC: MS/GCP operation
Track 1 : MS/GCP Operation = Yes (OCCN)

BASIC: Island operation
Track 1 : Island Used = No (OCCN)

BASIC: radio Dax links
Radio DAX link A Used = No (OCCN)
Radio DAX link B Used = No (OCCN)

BASIC: Vital Comms links
Vital Comms link 1 Used = No (OCCN)
Vital Comms link 2 Used = No (OCCN)

PREDICTORS: track 1
Track 1 : Prime Used = No (OCCN)
Track 1 : Dax A Used = Yes (OCCN)
Track 1 : Dax B Used = No (OCCN)
Track 1 : Dax C Used = No (OCCN)
Track 1 : Dax D Used = No (OCCN)
Track 1 : Dax E Used = No (OCCN)
Track 1 : Dax F Used = No (OCCN)
Track 1 : Dax G Used = No (OCCN)

GCP: track 1
Track 1 : GCP Freq Category = Standard (Field)
Track 1 : GCP Frequency = 645 Hz (Field,TCN)
Track 1 : Approach Distance = 1000 ft (Field,TCN)
Track 1 : Uni/Bi/Sim-Bidirni = Unidirni(OCCN,TCN)
Track 1 : GCP Transmit Level = High (Field,TCN)
Track 1 : Island Connection = No Islands (OCCN)
Track 1 : Directionally Wired = No (OCCN)
Track 1 : Island Distance = 0 ft (Field,TCN)
Track 1 : Computed Distance = 9999 ft (Field,TCN)
Track 1 : Linearization Steps = 100 (Field,TCN)

GCP: track 1 enhanced det
Track 1 : Inbound PS Sensitivity = High (Field)
Track 1 : Speed Limiting Used = Yes (Field)
Track 1 : Outbound False Act Lvl = Normal(Field)
Track 1 : Outbound PS Timer = 20 sec (Field)
Track 1 : Trailing Switch Logic = On (Field)
Track 1 : Post Joint Detn Time = 15 sec (OCCN)
Track 1 : Adv Appr Predn = No (OCCN)
Track 1 : Cancel Pickup Delay = This Isl(OCCN)

GCP: track 1 BIDAX RX
Track 1 : BIDAX To RX Appr = Not Used (OCCN)

GCP: track 1 BIDAX TX
Track 1 : BIDAX To TX Appr = Not Used (OCCN)

GCP: track 1 Dax A
Track 1 : Dax A Warning Time = 31 sec (OCCN)
Track 1 : Dax A Offset Distance = 2273 ft (Field)
Track 1 : Switch MS EZ Level = 0 (OCCN)
Track 1 : Pickup Delay Mode = Auto (OCCN)
Track 1 : Dax A MS/GCP Mode = Pred (OCCN)
Track 1 : Dax A Pickup Delay = 8 sec (OCCN)
Track 1 : Dax A Enable = Not Used (OCCN)

GCP: track 1 pos start
Track 1 : Positive Start = Off (OCCN)
Track 1 : Sudden Shnt Det Used = No (OCCN)
Track 1 : Low EZ Detection Used = No (OCCN)

GCP: track 1 MS Control
Track 1 : MS/GCP CtrlIP Used = No (OCCN)
Track 1 : MS Sensitivity Level = 0 (Field)
Track 1 : Compensation Level = 1300 (Field,TCN)
Track 1 : Warn Time-Ballast Comp = Low (Field,TCN)
Track 1 : Low EX Adjustment = 39 (Field)
Track 1 : Bidirn Dax Passthru = No (OCCN)
Track 1 : False Act on Train Stop = No (Field)
Track 1 : EX Limiting Used = Yes (Field)
Track 1 : EZ Correction Used = Yes (Field)

AND: track Anding
AND 1 XR Used = No (OCCN)
AND 2 Used = No (OCCN)
AND 3 Used = No (OCCN)
AND 4 Used = No (OCCN)
AND 5 Used = No (OCCN)
AND 6 Used = No (OCCN)
AND 7 Used = No (OCCN)
AND 8 Used = No (OCCN)

ADVANCED: MS restart
MS/GCP Restart Used = No (OCCN)

ADVANCED: out of service
OOS Control = Display (OCCN)
OOS Timeout = Yes (OCCN)
OOS Timeout = 1 hrs (Field)

ADVANCED: track wrap circuits
Wrap LOS Timer = 5 sec (OCCN)
Track 1 Wrap Used = No (OCCN)

ADVANCED: trk 1 overrides
Track 1 : AllPredictors Override Used = No (OCCN)
Track 1 : Dax A Override Used = No (OCCN)

ADVANCED: OR logic
OR 1 Used = No (OCCN)
OR 2 Used = No (OCCN)
OR 3 Used = No (OCCN)
OR 4 Used = No (OCCN)

ADVANCED: Internal I/O 1
Pass Thrus = No (OCCN)
Int.1 Sets = Not Used (OCCN)
Int.1 Set by = Not Used (OCCN)
Int.2 Sets = Not Used (OCCN)
Int.2 Set by = Not Used (OCCN)
Int.3 Sets = Not Used (OCCN)
Int.3 Set by = Not Used (OCCN)
Int.4 Sets = Not Used (OCCN)
Int.4 Set by = Not Used (OCCN)

ADVANCED: Internal I/O 2
Int.5 Sets = Not Used (OCCN)
Int.5 Set by = Not Used (OCCN)
Int.6 Sets = Not Used (OCCN)
Int.6 Set by = Not Used (OCCN)
Int.7 Sets = Not Used (OCCN)
Int.7 Set by = Not Used (OCCN)
Int.8 Sets = Not Used (OCCN)
Int.8 Set by = Not Used (OCCN)

ADVANCED: Internal I/O 3
Int.9 Sets = Not Used (OCCN)
Int.9 Set by = Not Used (OCCN)
Int.10 Sets = Not Used (OCCN)
Int.10 Set by = Not Used (OCCN)
Int.11 Sets = Not Used (OCCN)
Int.11 Set by = Not Used (OCCN)
Int.12 Sets = Not Used (OCCN)
Int.12 Set by = Not Used (OCCN)

ADVANCED: Internal I/O 4
Int.13 Sets = Not Used (OCCN)
Int.13 Set by = Not Used (OCCN)
Int.14 Sets = Not Used (OCCN)
Int.14 Set by = Not Used (OCCN)
Int.15 Sets = Not Used (OCCN)
Int.15 Set by = Not Used (OCCN)
Int.16 Sets = Not Used (OCCN)
Int.16 Set by = Not Used (OCCN)

ADVANCED: site options
Daylight Savings = On (Field)
Units = Standard (OCCN)
Maint Call Rpt IP Used = No (OCCN)
Emergency Activate IP = No (OCCN)
EZ/EX Logging = Change (Field)
EZ/EX Point Change = 3 (Field)

OUTPUT: assignment page 1
OUT 1.1 = Ti Dax A (OCCN)
OUT 1.2 = Not Used (OCCN)

INPUT: assignment page 1
IN 1.1 = Not Used (OCCN)
IN 1.2 = Not Used (OCCN)

SITE: programming
Radio Subnode = 1 (Field)
Field Password = Off (OCCN)
Low Battery Enabled = Off (Field)

Configuration Package File

Filename: gll-094.80.pac
Date/Time: 1/04/2013 9:05:42

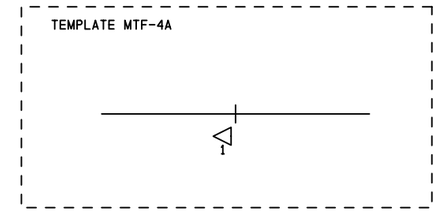

NOTES
1) DISTANCE(S) TO BE VERIFIED AT INSTALLATION
INDICATE SELECTED PROGRAMMED VALUE IF DIFFERENT THAN SHOWN
REFER TO 4000 GCP INSTRUCTION/INSTALLATION MANUAL
FOR PROGRAMMING PARAMETERS
2) PROGRAM TEXT HIGHLIGHTED IN RED INDICATES 4000 PROGRAM
MODIFICATIONS TO DEFAULT PROGRAM VALUES
3) EACH CONSTANT WARNING DEVICE SYSTEM TO BE PROGRAMMED TO
CONVERT TO A MOTION SENSOR 300 FEET FROM EDGE OF ROAD TRAVELLED WAY
SHUNT TRACK 300 FEET FROM EDGE OF ROAD TRAVELLED WAY
AND NOTE "EZ" VALUE
PROGRAM EACH SYSTEM WITH THE INDICATED "EZ" VALUE +2
4) VERIFY SET TIMER VALUE TO MATCH ACTUAL TRAIN MOVEMENT
WITHIN THE CROSSING APPROACH CIRCUITS

IRC 22 OCT 2012
PROPOSED
DESIGN NO. 12-0163
RED-IN YELLOW-OUT
AS INSTALLED
DATE _____
BY _____
(PRINT NAME)

PROPOSED			REVISIONS	D	C	COMPLETED			C
D	M	Y				D	M	Y	

REGION SOUTHERN
SUB. GILMAN 349
SIGNALS AND COMMUNICATIONS HOMEWOOD
DES. NAD
22 OCTOBER 2012
CH. BJW
GCP 4000
PROGRAM INFORMATION
ROBERTS, IL
REMOTE GCP
GIL-094.80-03

gll-094.80-03.dgn
30-JAN-2013

INVENSYS RAIL CORPORATION			
DES.: NAD	DATE: 10/22/12	JOB NO.: PICA10374	
CKD.: BJW	ISSUE DATE: N/A	EST. NO.: XP-6509	
DRN.: NAD	PLAN NO.: N/A	SHEET 3 OF 7	
P TIME: 09:42	P DATE: 30-JAN-2013	CAD ID.: GIL-094.80-03	

INVENSYS RAIL CORP.
LOUISVILLE DIVISION, LOUISVILLE, KY

REVISIONS				
NO.	DATE	BY	DESCRIPTION	APP. BY
1				
2				
3				
4				
5				

GCP 4000
CALIBRATION HISTORY

INITIAL SET UP BY: _____ DATE: _____

		APPROACH DISTANCE CALIBRATION										LINEARIZATION CALIBRATION	
		EZ/EX VALUES (TRACK UNOCCUPIED)				HARD WIRE SHUNT AT TERMINATION SHUNT				COMPUTED APPROACH DISTANCE		LINEARIZATION STEP VALUE	
		EZ		EX		EZ		EX					
		NRML	STBY	NRML	STBY	NRML	STBY	NRML	STBY	NRML	STBY	NRML	STBY
NORTH	TRACK 1												
SOUTH	TRACK 1	N/A	N/A	N/A	N/A	N/A	N/A	N/A	N/A	N/A	N/A	N/A	N/A

GCP 4000
CALIBRATION HISTORY

INITIAL SET UP BY: _____ DATE: _____

		APPROACH DISTANCE CALIBRATION										LINEARIZATION CALIBRATION	
		EZ/EX VALUES (TRACK UNOCCUPIED)				HARD WIRE SHUNT AT TERMINATION SHUNT				COMPUTED APPROACH DISTANCE		LINEARIZATION STEP VALUE	
		EZ		EX		EZ		EX					
		NRML	STBY	NRML	STBY	NRML	STBY	NRML	STBY	NRML	STBY	NRML	STBY
NORTH	TRACK 1												
SOUTH	TRACK 1	N/A	N/A	N/A	N/A	N/A	N/A	N/A	N/A	N/A	N/A	N/A	N/A

GCP 4000
CALIBRATION HISTORY

INITIAL SET UP BY: _____ DATE: _____

		APPROACH DISTANCE CALIBRATION										LINEARIZATION CALIBRATION	
		EZ/EX VALUES (TRACK UNOCCUPIED)				HARD WIRE SHUNT AT TERMINATION SHUNT				COMPUTED APPROACH DISTANCE		LINEARIZATION STEP VALUE	
		EZ		EX		EZ		EX					
		NRML	STBY	NRML	STBY	NRML	STBY	NRML	STBY	NRML	STBY	NRML	STBY
NORTH	TRACK 1												
SOUTH	TRACK 1	N/A	N/A	N/A	N/A	N/A	N/A	N/A	N/A	N/A	N/A	N/A	N/A

IRC 22 OCT 2012

PROPOSED
DESIGN NO. 12-0163
RED-IN YELLOW-OUT

AS INSTALLED
DATE _____
BY _____
(PRINT NAME)

41" HIGH CASE

PROPOSED			REVISIONS	D	C	COMPLETED			C
D	M	Y				D	M	Y	

REGION SOUTHERN
SUB. GILMAN 349

SIGNALS AND COMMUNICATIONS HOMEWOOD
22 OCTOBER 2012
DES. NAD
CH. BJW

GCP 4000
CALIBRATION HISTORY
ROBERTS, IL
REMOTE GCP

GIL-094.80-04

INVENSYS RAIL CORPORATION			
DES.: NAD	DATE: 10/22/12	JOB NO.: PICA10374	
CKD.: BJW	ISSUE DATE: N/A	EST. NO.: XP-6509	
DRN.: NAD	PLAN NO.: N/A	SHEET 4 OF 7	
P TIME: 09:42	P DATE: 30-JAN-2013	CAD ID.: GIL-094.80-04	

INVENSYS RAIL CORP.
LOUISVILLE DIVISION, LOUISVILLE, KY

gil-094.80-04.dgn
30-JAN-2013

REVISIONS				
NO.	DATE	BY	DESCRIPTION	APP. BY
1				
2				
3				
4				
5				

gil-094, 80-05, dgn
30-JAN-2013

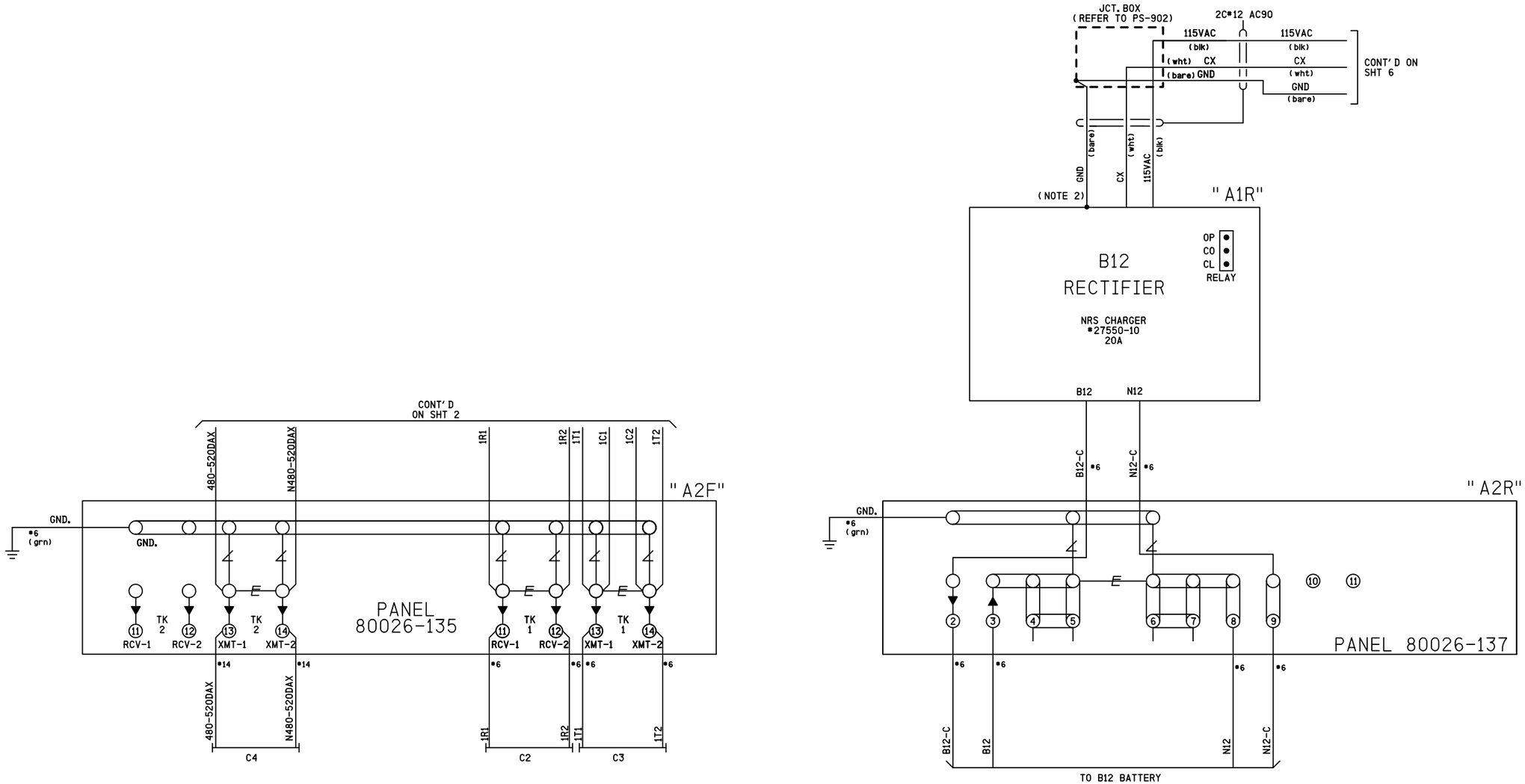

NOTES

1) ALL WIRING TO BE *16 AWG MINIMUM UNLESS OTHERWISE NOTED
2) GROUND LUG LOCATED ON CHARGER HOUSING

DENOTES HD EQUALIZER CN* 02-32-391
SAFETRAN * 022700-1X

DENOTES LOW VOLTAGE ARRESTOR CN*
ERICO * ETSP23050

IRC 22 OCT 2012

PROPOSED
DESIGN NO. 12-0163
RED-IN YELLOW-OUT

AS INSTALLED
DATE _____
BY _____
(PRINT NAME)

41" HIGH CASE

PROPOSED			REVISIONS	D	C	COMPLETED			C
D	M	Y				D	M	Y	

REGION SOUTHERN
SUB. GILMAN 349

SIGNALS AND COMMUNICATIONS HOMEWOOD
22 OCTOBER 2012
DES. NAD
CH. BJW

B12 RECTIFIER CIRCUITS AND SURGE PANEL
ROBERTS, IL
REMOTE GCP

GIL-094. 80-05

INVENSYS RAIL CORPORATION		
DES. : NAD	DATE: 10/22/12	JOB NO. : PICA10374
CKD. : BJW	ISSUE DATE: N/A	EST. NO. : XP-6509
DRN. : NAD	PLAN NO. : N/A	SHEET 5 OF 7
P TIME: 09:42	P DATE: 30-JAN-2013	CAD ID. : GIL-094. 80-05

INVENSYS RAIL CORP.
LOUISVILLE DIVISION, LOUISVILLE, KY

REVISIONS				
NO.	DATE	BY	DESCRIPTION	APP. BY
1				
2				
3				
4				
5				

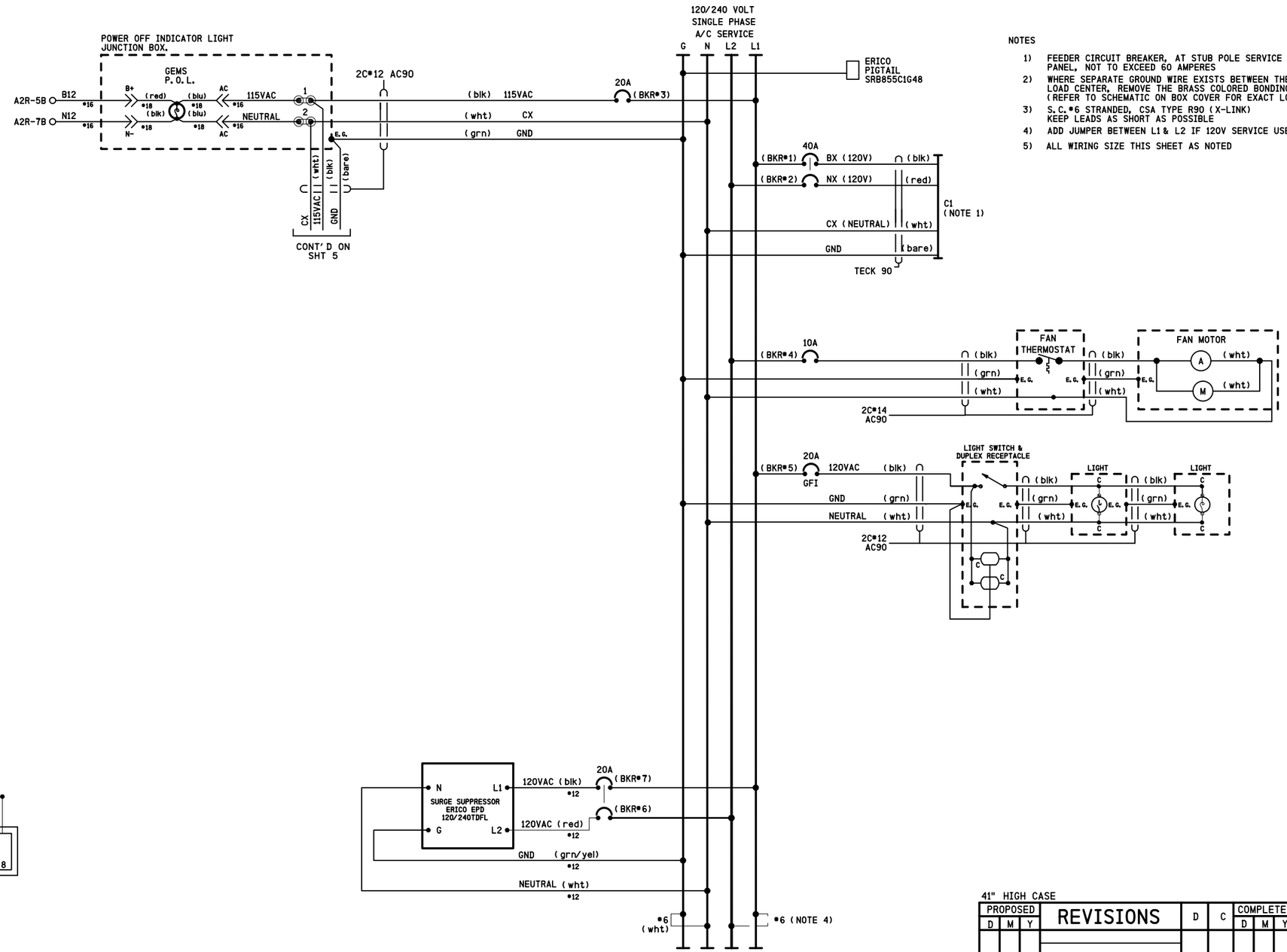

NOTES

1) FEEDER CIRCUIT BREAKER, AT STUB POLE SERVICE PANEL, NOT TO EXCEED 60 AMPERES
2) WHERE SEPARATE GROUND WIRE EXISTS BETWEEN THE SERVICE AND THE LOAD CENTER, REMOVE THE BRASS COLORED BONDING SCREW (REFER TO SCHEMATIC ON BOX COVER FOR EXACT LOCATION)
3) S.C.*6 STRANDED, CSA TYPE R90 (X-LINK) KEEP LEADS AS SHORT AS POSSIBLE
4) ADD JUMPER BETWEEN L1 & L2 IF 120V SERVICE USED.
5) ALL WIRING SIZE THIS SHEET AS NOTED

IRC 22 OCT 2012

PROPOSED
DESIGN NO. 12-0163
RED-IN YELLOW-OUT

AS INSTALLED
DATE _____
BY _____
(PRINT NAME)

41" HIGH CASE

PROPOSED			REVISIONS	D	C	COMPLETED			C
D	M	Y				D	M	Y	

REGION SOUTHERN
SUB. GILMAN 349

SIGNALS AND COMMUNICATIONS HOMEWOOD
22 OCTOBER 2012
DES. NAD
CH. BJW

AC DISTRIBUTION
ROBERTS, IL
REMOTE GCP

GIL-094.80-06

INVENSYS RAIL CORPORATION

DES. : NAD	DATE: 10/22/12	JOB NO.: PICA10374	
CKD. : BJW	ISSUE DATE: N/A	EST. NO. XP-6509	
DRN. : NAD	PLAN NO. :N/A	SHEET 6 OF 7	
P TIME: 09:43	P DATE: 30-JAN-2013	CAD ID.: GIL-094.80-06	

gil-094.80-06.dgn
30-JAN-2013

INVENSYS RAIL CORP.
LOUISVILLE DIVISION, LOUISVILLE, KY

REVISIONS				
NO.	DATE	BY	DESCRIPTION	APP. BY
1				
2				
3				
4				
5				

gll-094, 80-07. dgn
30-JAN-2013

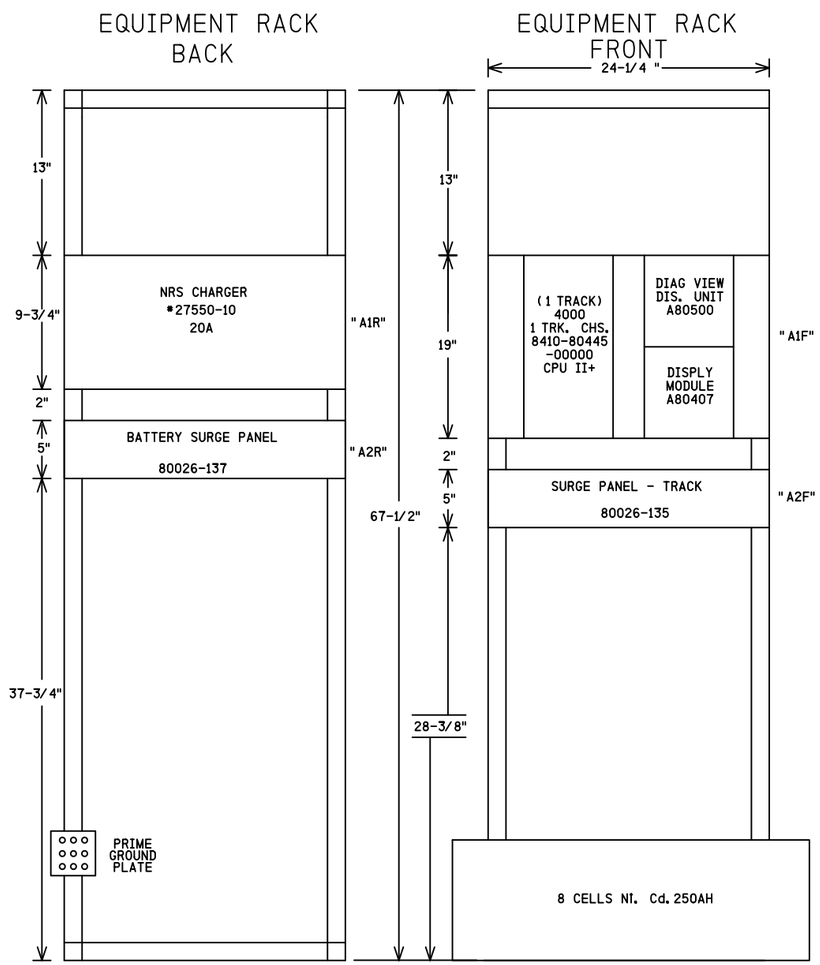

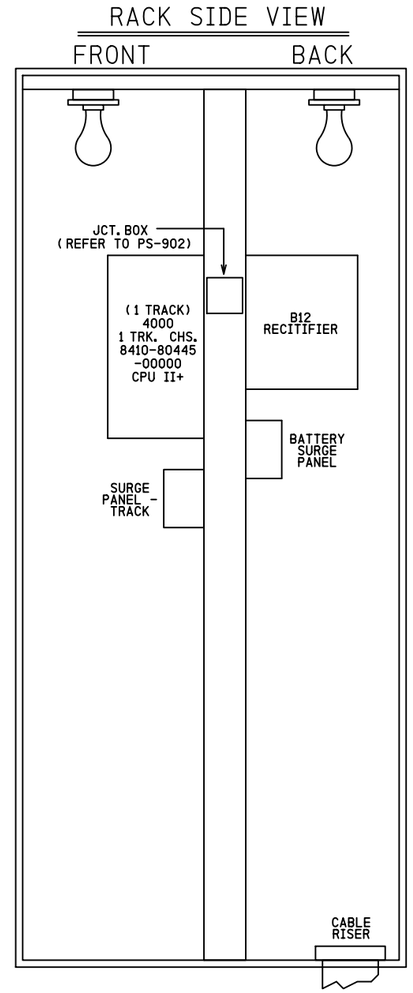

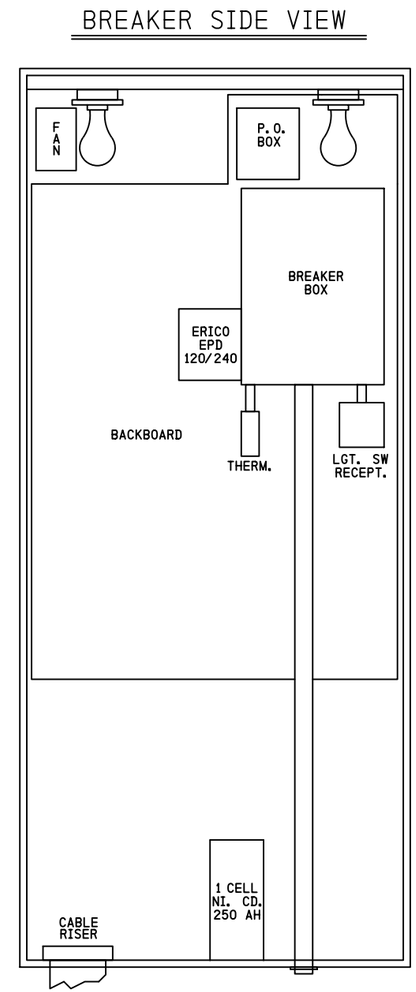

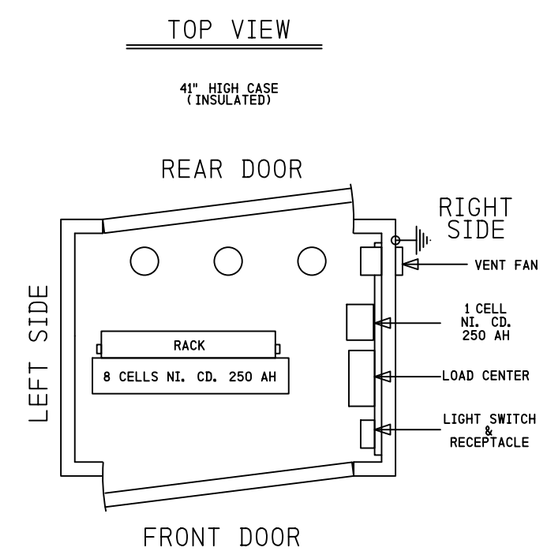

IRC 22 OCT 2012

PROPOSED
DESIGN NO. 12-0163
RED-IN YELLOW-OUT

AS INSTALLED
DATE _____
BY _____
(PRINT NAME)

NOTES
1) SURGE PROTECTION SHOULD BE BONDED TO THE CASE

41" HIGH CASE

PROPOSED D	M	Y	REVISIONS	D	C	COMPLETED D	M	Y	C

REGION SOUTHERN
SUB. GILMAN 349

SIGNALS AND COMMUNICATIONS HOMEWOOD
22 OCTOBER 2012
DES. NAD
CH. BJW

CASE LAYOUT
SIDE "A" & "B"
ROBERTS, IL
REMOTE GCP

GIL-094. 80-07

INVENSYS RAIL CORPORATION			
DES. : NAD	DATE: 10/22/12	JOB NO. : PICA10374	
CKD. : BJW	ISSUE DATE: N/A	EST. NO. : XP-6509	
DRN. : NAD	PLAN NO. : N/A	SHEET 7 OF 7	
P TIME: 09:43	P DATE: 30-JAN-2013	CAD ID. : GIL-094. 80-07	

INVENSYS RAIL CORP.
LOUISVILLE DIVISION, LOUISVILLE, KY