PLAN MUST NOT BE MODIFIED WITHOUT APPROVAL OF SIGNAL ENGINEERING

COPYRIGHT 2011 BNSF RAILWAY COMPANY. ALL RIGHTS RESERVED.

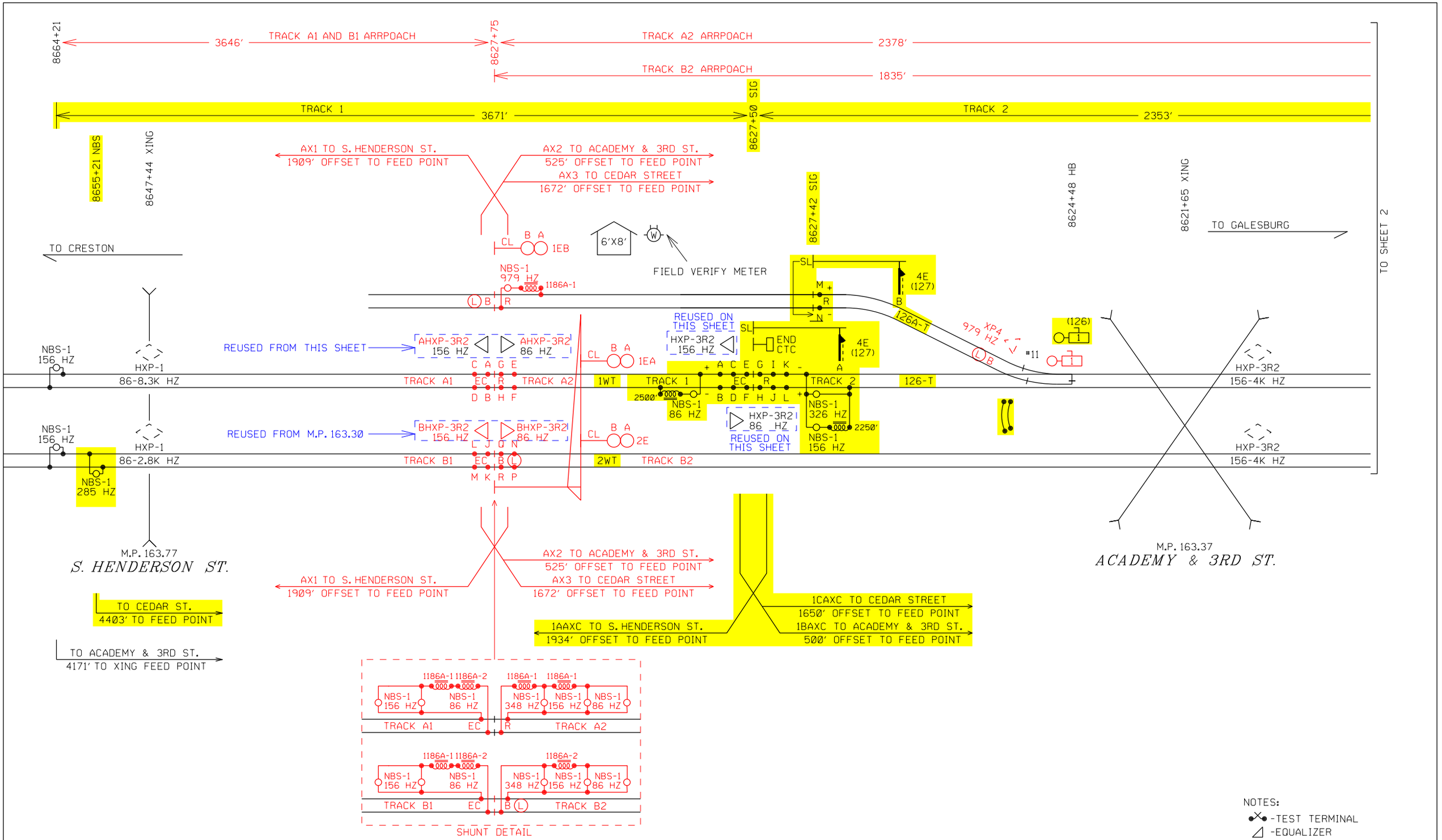

NOTES:

- -TEST TERMINAL
- -EQUALIZER
- -LINE ARRESTER
- -HEAVY DUTY ARRESTER
- -TWISTED WIRE 2 TURNS PER FOOT

ALL WIRES #16 AWG UNLESS OTHERWISE NOTED

NOTES:

EQUIPMENT IS DESIGNED FOR 20 SECONDS MINIMUM WARNING TIME AT 79 MPH.
APPROACHES WERE LENGTHENED 3 SECOND(S) FOR WIDE OR ANGLED CROSSING (CT) AT HENDERSON STREET.
APPROACHES WERE LENGTHENED 2 SECOND(S) FOR WIDE OR ANGLED CROSSING (CT) AT ACADEMY & 3RD STREET.
APPROACHES WERE LENGTHENED 4 SECOND(S) FOR WIDE OR ANGLED CROSSING (CT) AT CEDAR STREET.
APPROACHES WERE LENGTHENED 10 SECONDS FOR SPEED VARIANCE AND BALLAST CHANGES (BT).
APPROACHES WERE LENGTHENED 4 SECONDS FOR EQUIPMENT RESPONSE TIME (ERT).

NOTICE:
THERE ARE FIELD VERIFY NOTES
THAT HAVE NOT BEEN VERIFIED
DATE 06-15-11

TRACK LAYOUT
ACADEMY INTERFACE HOUSE

BURLINGTON NORTHERN SANTA FE RAILWAY

CROSSING CIRCUIT PLAN
REMOTE XING GALESBURG, IL.

IN SVC. 02-17-05 SEQ#30766 INSTALL CODED TRACK DES: DSD/HVT COR: DSD/RSK						DESIGNED 06-15-11 GALESBURG PTC 2011 TCS/JML SEQ.# 47149	LS 0001	MP 163.49	SH 01 OF 12

0001163_49x01c_.dgn June 15, 2011 BLUE = REUSED RED = IN YELLOW = OUT PRELIMINARY

PLAN MUST NOT BE MODIFIED WITHOUT APPROVAL OF SIGNAL ENGINEERING

COPYRIGHT 2011 BNSF RAILWAY COMPANY. ALL RIGHTS RESERVED.

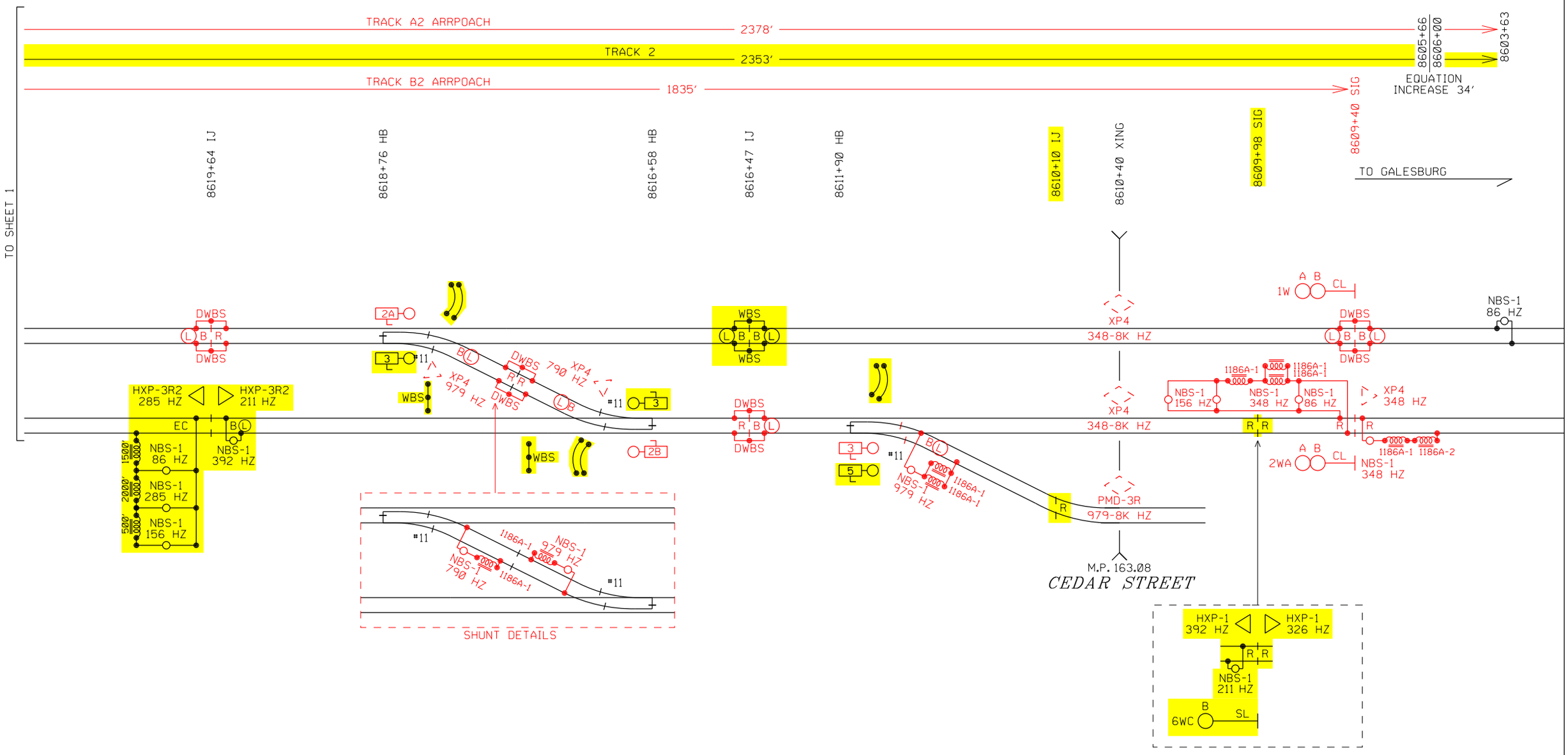

TRACK LAYOUT
ACADEMY INTERFACE HOUSE

BURLINGTON NORTHERN SANTA FE RAILWAY

CROSSING CIRCUIT PLAN
REMOTE XING GALESBURG, IL.

IN SVC. 02-17-05 SEQ#30766 INSTALL CODED TRACK DES: DSD/HVT COR: DSD/RSK						DESIGNED 06-15-11 GALESBURG PTC 2011 TCS/JML SEQ.# 47149	LS 0001	MP 163.49	SH 02 OF 12

0001163_49x02c_.dgn June 15, 2011

RED = IN YELLOW = OUT

PRELIMINARY

PLAN MUST NOT BE MODIFIED WITHOUT APPROVAL OF SIGNAL ENGINEERING
COPYRIGHT 2011 BNSF RAILWAY COMPANY. ALL RIGHTS RESERVED.

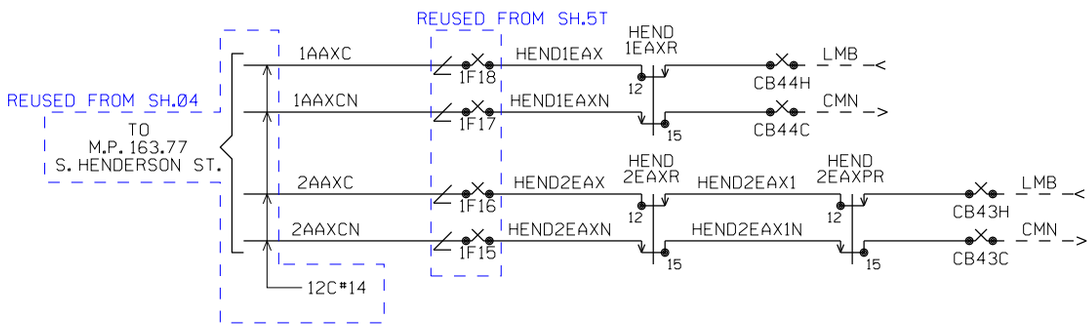

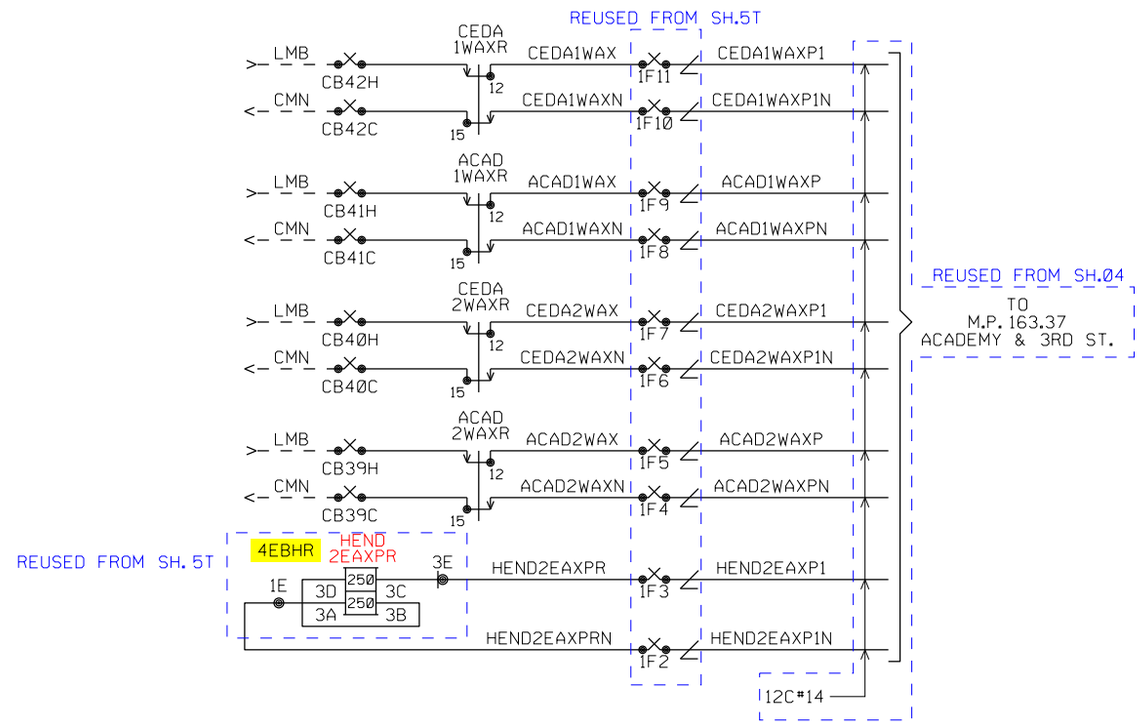

ALL NEW SHEET

BURLINGTON NORTHERN SANTA FE RAILWAY

DAX CABLE LAYOUT
REMOTE XING GALESBURG, IL.

DESIGNED 06-15-11
GALESBURG PTC 2011
TCS/JML SEQ.# 47149

LS 0001 | MP 163.49 | SH 03 OF 12

0001163_49x03c_.dgn June 15, 2011

BLUE = REUSED RED = IN YELLOW = OUT

PRELIMINARY

PLAN MUST NOT BE MODIFIED WITHOUT APPROVAL OF SIGNAL ENGINEERING COPYRIGHT 2011 BNSF RAILWAY COMPANY. ALL RIGHTS RESERVED.

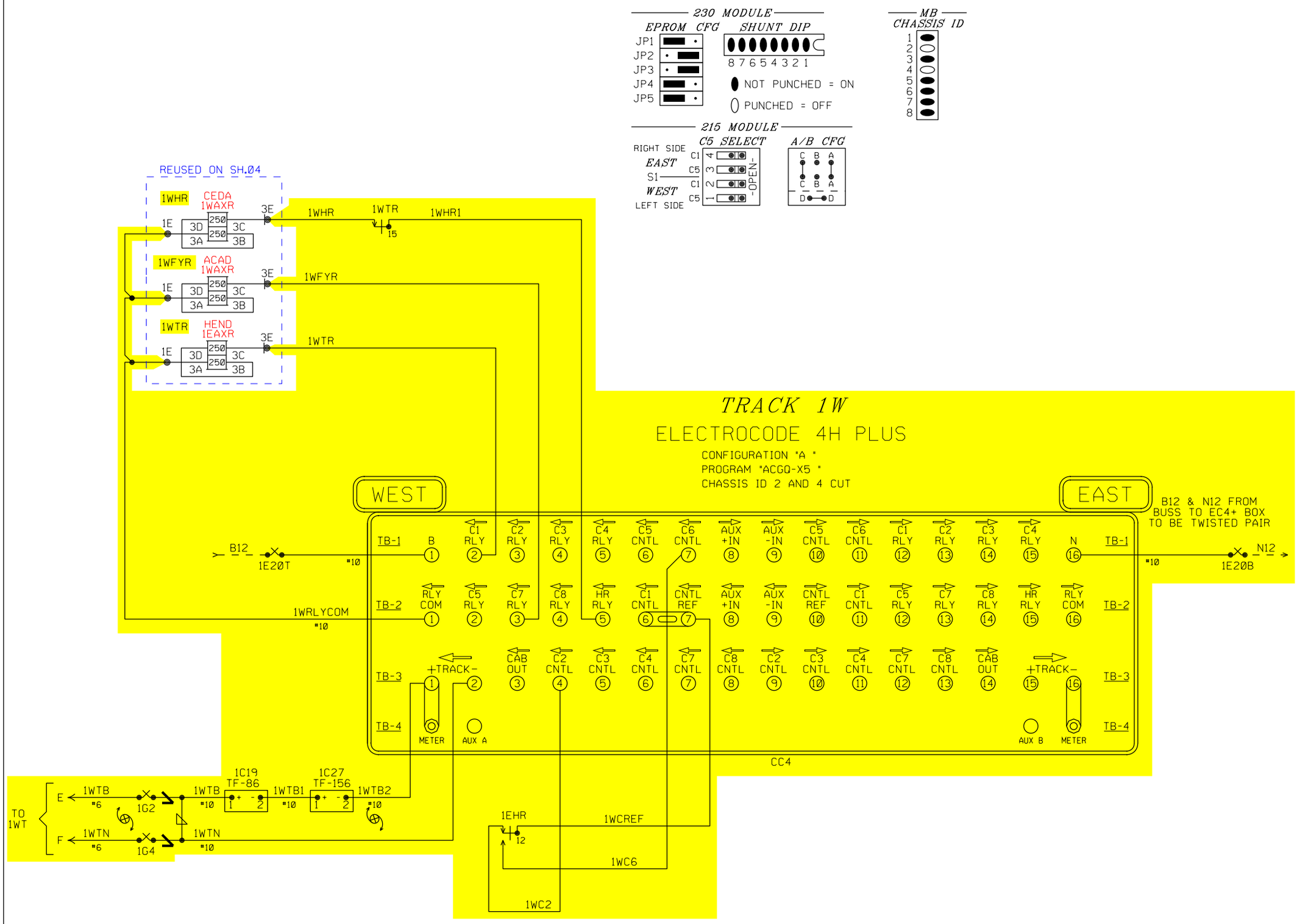

THIS SHEET TO BECOME
VOID
UPON COMPLETION OF CUTOVER

BURLINGTON NORTHERN SANTA FE RAILWAY

ELECTROCODE (1W) TRACK CIRCUITS
ACADEMY INTERFACE HOUSE

IN SVC. 02-17-05 SEQ#30766
INSTALL CODED TRACK
DES: DSD/HVT COR: DSD/RSK

DESIGNED 06-15-11
GALESBURG PTC 2011
TCS/JML SEQ.# 47149

LS 0001 | MP 163.49 | SH 03 OF 12

0001163_49x03t_.dgn June 15, 2011

BLUE = REUSED RED = IN YELLOW = OUT

PRELIMINARY

SH 3T

PLAN MUST NOT BE MODIFIED WITHOUT APPROVAL OF SIGNAL ENGINEERING

COPYRIGHT 2011 BNSF RAILWAY COMPANY. ALL RIGHTS RESERVED.

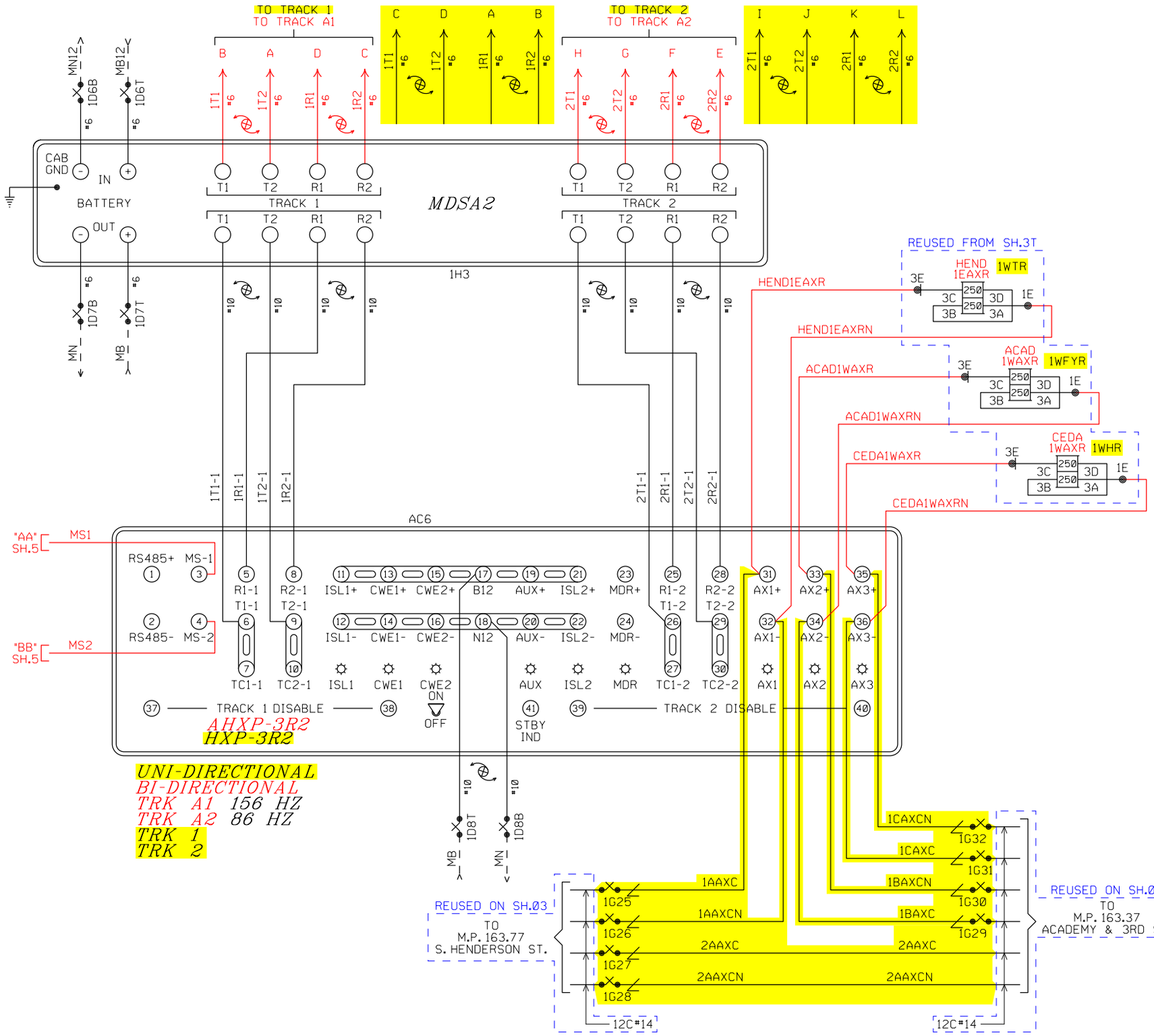

PROGRAM INFORMATION

PROGRAM VERSION 35.0 OR LATER

*=FIELD ADJUSTMENT TO BE MADE ACCORDING TO THE HXP-3 INSTRUCTION MANUAL AND SUPPLEMENTS.

HXP-3R2 ADJUSTMENTS

NO.	ADJUSTMENT NAME	TRACK 1	TRACK 2
1	APP. LENGTH	3671' 3646'	2353' 2378'
2	WARNING TIME	99 SEC.	99 SEC.
3	LIA	*	*
4	TC	*	*
5	MD RESTART	DL (99)	DL (99)

OPTION ADJUSTMENTS

NO.	ABBREVIATION	TRACK 1	TRACK 2
1	TK-ENA	"UP"	"UP"
2	TK FO	156 HZ	86 HZ
3	CW/MD	"C"	"C"
4	UNI-BI	"b" (BI) "u" (UNI)	"b" (BI) "u" (UNI)
5	NBS-C	*	*
6	CWEWT	DL (80 SEC.)	DL (80 SEC.)
7	LOS	DL (16 SEC.)	DL (16 SEC.)
8	IJ-LOS	DL (5 SEC.)	DL (5 SEC.)
9	BC	*	*
10	P-COMP	*	*
11	AX1	SEE AX ADJ.	SEE AX ADJ.
12	AX2	SEE AX ADJ.	SEE AX ADJ.
13	AX3	SEE AX ADJ.	SEE AX ADJ.
17	MDR-AX/OF-TK 1 OR 2	9999' 0	9999' 0
	CJ-LOS	DL (0)	DL (0)
	PJ-DET	DL (15 SEC.)	DL (15 SEC.)
	PJ-RX	DL (15)	DL (15)
18	MD-TMR	DL (10 MIN.)	DL (10 MIN.)
19	MIN-WT	DL (0)	DL (0)
20	FS-RX	DL (0)	DL (0)
	FS-TM	DL (10 MIN.)	DL (10 MIN.)
21	POS-RX	DL (0)	DL (0)
	POS-TM	DL (0)	DL (0)
22	AR-RX	DL (0)	DL (0)
	AR-TM	DL (10 MIN.)	DL (10 MIN.)
47	ATO-RX	UP	UP
48	PF-ENA	"dn"	"dn"

NO.	ABBREVIATION	AX 1	AX 2	AX 3
11	AX1	NA	2	
12	AX2	1	NA	
13	AX3	1	NA	

AX ADJUSTMENTS

NO.	ABBREVIATION	AX 1	AX 2	AX 3
1	TK-ASN	2	1	1
2	OF-TK1	NA	500' 525'	1650' 1672'
3	OF-TK2	1934' 1909'	NA	NA
4	WT	33 SEC.	32 SEC.	34 SEC.
5	MD-RST	"0" "1"	"0" "1"	"0" "1"
6	CW/MD	"C"	"C"	"C"
7	CJ-LOS	DL (0)	DL (0)	DL (0)
8	PJ-DET	DL (15 SEC.)	DL (15 SEC.)	DL (15 SEC.)
9	PJ-RX	DL (15)	DL (15)	DL (15)
10	POS-ST	"dn"	"dn"	"dn"

SWITCH INFORMATION

SWITCH	TRACK 1	TRACK 2
MASTER/SLAVE	MASTER	MASTER
RSI FAULT JUMPER	NA	NA
RSI-LOS JUMPER	NA	NA
TLM W1 JUMPER	PINS 1-2	
TLM W2 JUMPER	PINS 2-3	
TLM W3 JUMPER	PINS 2-3	
MINUTE TIMEOUT	5 MIN	
CW/MD	CW	
STANDBY/AUTO/NORMAL	AUTO	

NOTE: DL= DEFAULT LEVEL
NA= NON APPLICABLE

TRACK 1

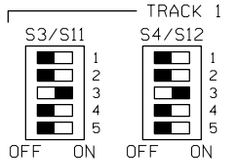

FREQ. = 156 HZ

TRACK 2

FREQ. = 86 HZ

NOTES: FOR S5/S13 AND S6/S14

*1.) ACTUATOR 1 SELECTS NORMAL APPROACH WHEN SET TO ON POSITION.

*2.) WITH ACTUATOR 1 IN OFF POSITION ACTUATOR 2 SELECTS SHORT APPROACH WHEN OFF AND SELECTS VERY SHORT WHEN ON.

3.) ACTUATOR 3 OFF SELECTS HXP OPERATION.

4.) ACTUATOR 4 RESERVED FOR FUTURE USE.

ACADEMY INTERFACE HOUSE

BURLINGTON NORTHERN SANTA FE RAILWAY

AHXP-3R2 TRACK CIRCUITS
REMOTE XING GALESBURG, IL.

IN SVC. 02-17-05 SEQ#30766
INSTALL CODED TRACK
DES: DSD/HVT COR: DSD/RSK

DESIGNED 06-15-11
GALESBURG PTC 2011
TCS/JML SEQ.# 47149

LS 0001 MP 163.49 SH 06 OF 12

0001163_49x04c_.dgn June 15, 2011

BLUE = REUSED RED = IN YELLOW = OUT

PRELIMINARY

SH 04

COPYRIGHT 2011 BNSF RAILWAY COMPANY. ALL RIGHTS RESERVED.

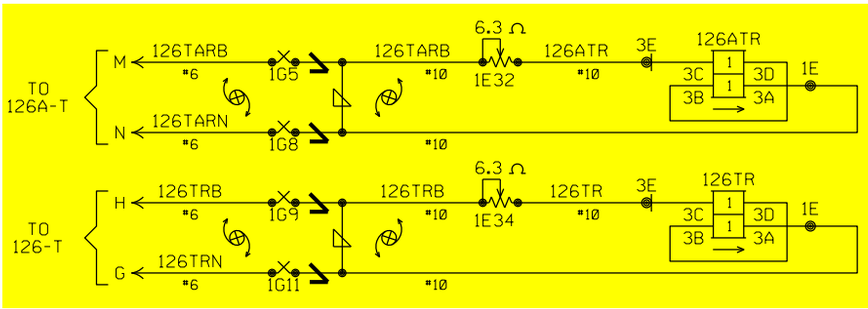

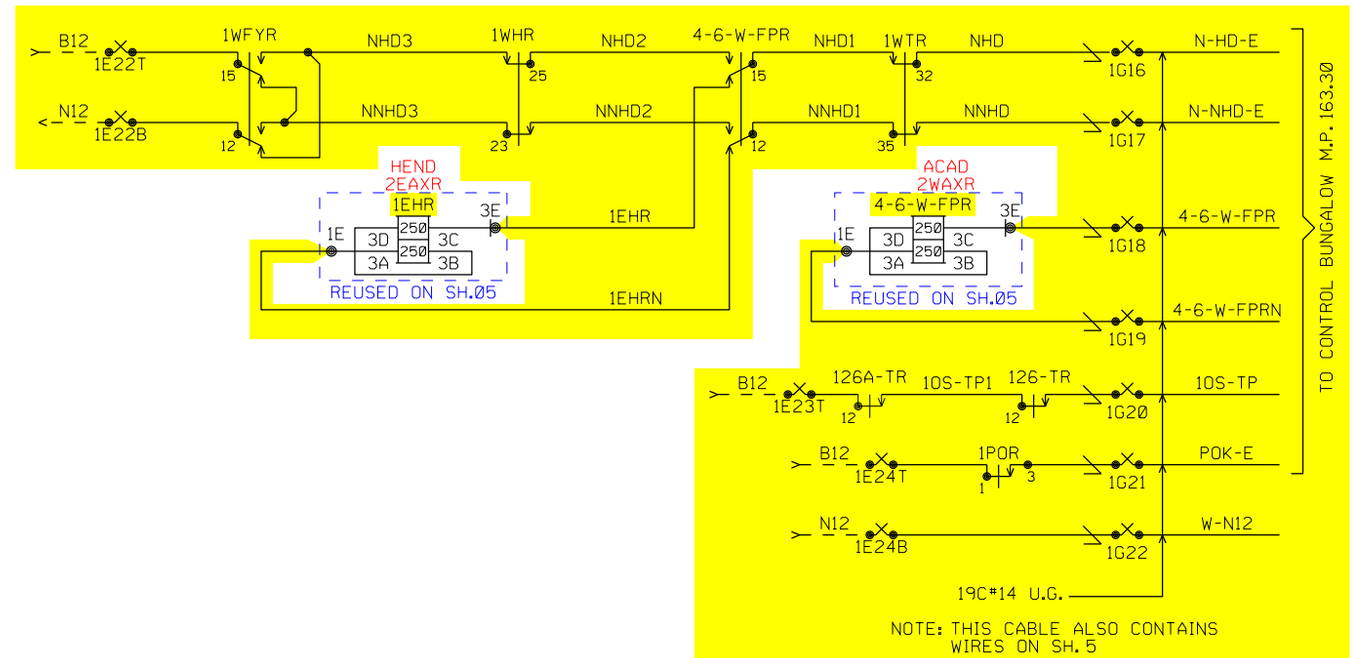

THIS SHEET TO BECOME

VOID

UPON COMPLETION OF CUTOVER

BURLINGTON NORTHERN SANTA FE RAILWAY

TRACK AND LINE CIRCUITS
ACADEMY INTERFACE HOUSE

IN SVC. 02-17-05 SEQ#30766 INSTALL CODED TRACK DES: DSD/HVT COR: DSD/RSK						DESIGNED 06-15-11 GALESBURG PTC 2011 TCS/JML SEQ.# 47149	LS 0001	MP 163.49	SH 04 OF 12

0001163_49x04t_.dgn June 15, 2011 BLUE = REUSED RED = IN YELLOW = OUT PRELIMINARY SH 4T

PLAN MUST NOT BE MODIFIED WITHOUT APPROVAL OF SIGNAL ENGINEERING COPYRIGHT 2011 BNSF RAILWAY COMPANY. ALL RIGHTS RESERVED.

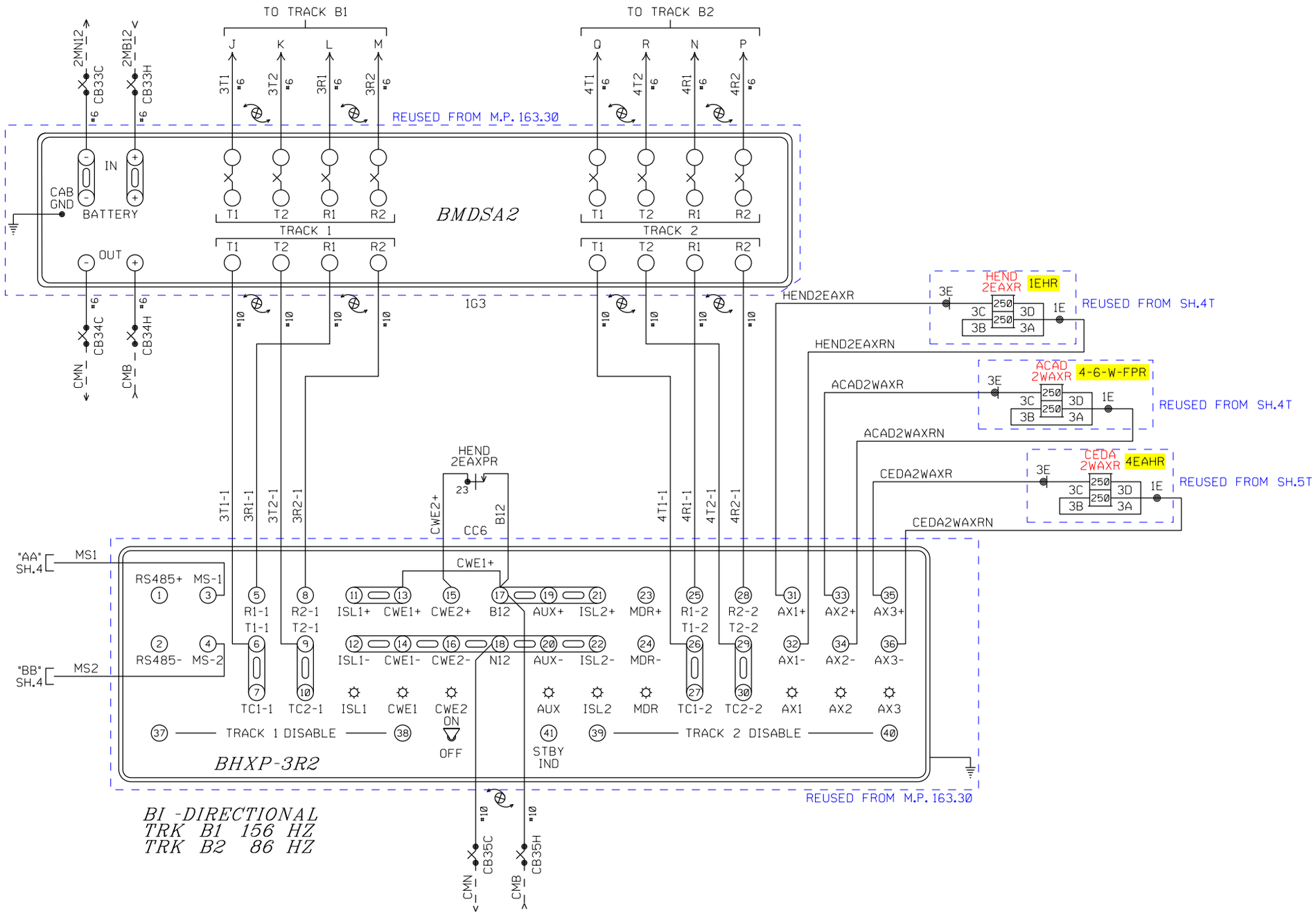

ALL NEW SHEET

BURLINGTON NORTHERN SANTA FE RAILWAY

BHXP-3R2 TRACK CIRCUITS
REMOTE XING GALESBURG, IL.

DESIGNED 06-15-11
GALESBURG PTC 2011
TCS/JML SEQ.# 47149

LS 0001 | MP 163.49 | SH 05 OF 12

0001163_49x05c_.dgn June 15, 2011

BLUE = REUSED RED = IN YELLOW = OUT

PRELIMINARY

PLAN MUST NOT BE MODIFIED WITHOUT APPROVAL OF SIGNAL ENGINEERING
COPYRIGHT 2011 BNSF RAILWAY COMPANY. ALL RIGHTS RESERVED.

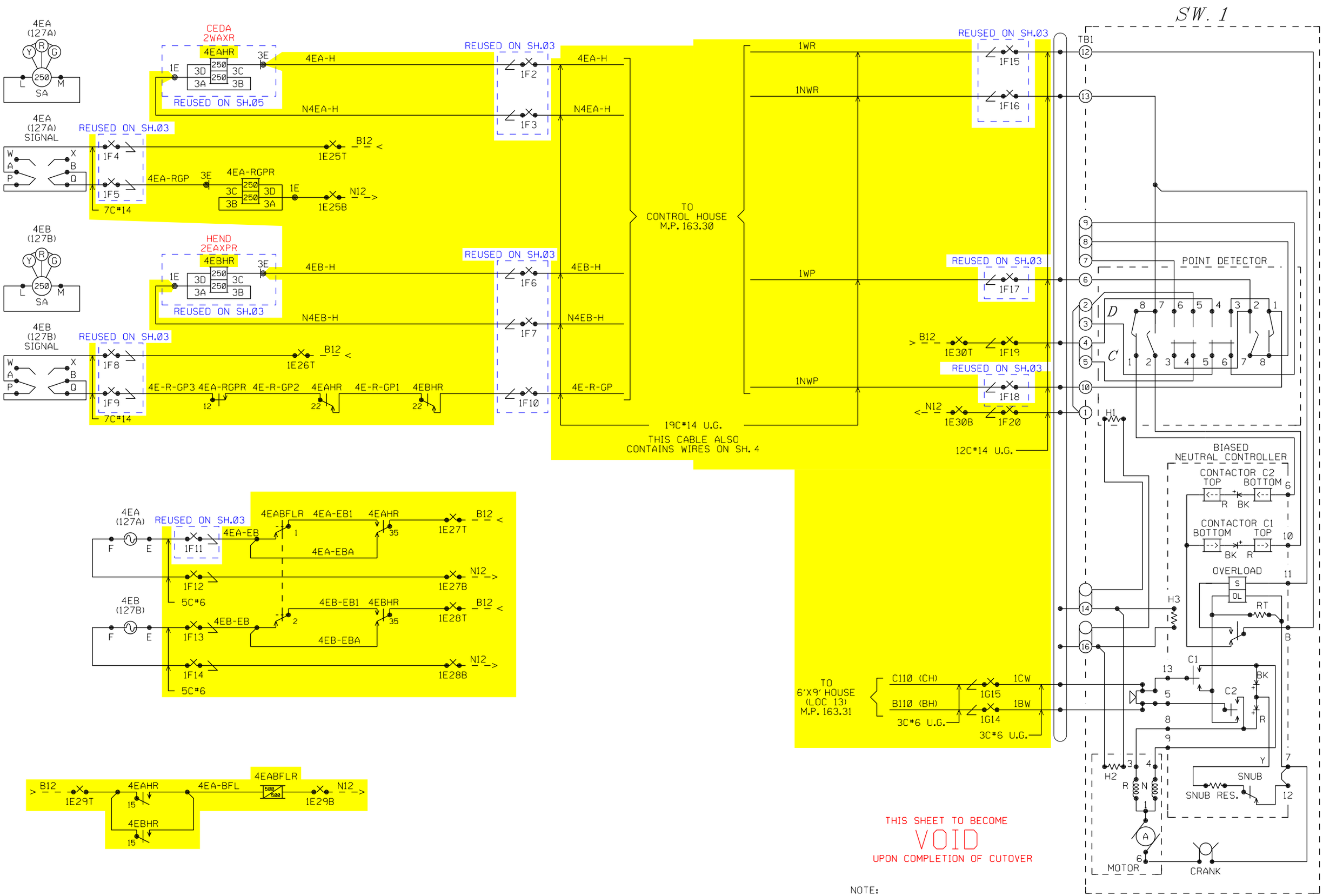

NOTE:

1) RIGHT-HAND SWITCH MACHINE
RIGHT HAND POINT NORMALLY CLOSED.

GRS MODEL 5G
RIGHT HAND

BURLINGTON NORTHERN SANTA FE RAILWAY

SWITCH & SIGNAL LIGHTING CIRCUITS
ACADEMY INTERFACE HOUSE

IN SVC. 02-17-05 SEQ#30766
INSTALL CODED TRACK
DES: DSD/HVT COR: DSD/RSK

DESIGNED 06-15-11
GALESBURG PTC 2011
TCS/JML SEQ.# 47149

LS 0001 | MP 163.49 | SH 05 OF 12

0001163_49x05t_.dgn June 15, 2011

BLUE = REUSED RED = IN YELLOW = OUT

PRELIMINARY

SH 5T

PLAN MUST NOT BE MODIFIED WITHOUT APPROVAL OF SIGNAL ENGINEERING COPYRIGHT 2011 BNSF RAILWAY COMPANY. ALL RIGHTS RESERVED.

PROGRAM INFORMATION

PROGRAM VERSION 42.0 OR LATER

*=FIELD ADJUSTMENT TO BE MADE ACCORDING TO THE HXP-3 INSTRUCTION MANUAL 100052-001 AD0 & SUPPLEMENTS.

HXP-3R2 ADJUST SELECT ADJUSTMENTS

NO.	ADJUSTMENT NAME	TRACK 1	TRACK 2
1	APPROACH LENGTH	3646'	1835'
2	WARNING TIME	99 SEC.	99 SEC.
3	LIA	*	*
4	TC	*	*
5	MD RESTART	*	*

NOTE:

BEFORE PROGRAMMING ANY PARAMETERS/OPTIONS FOR THE HXP GO TO 'OPTION 49' AND RESET ALL LOCAL PARAMETERS TO FACTORY DEFAULT VALUES. SEE HXP-3 MANUAL 100052-001 AD0 PAGE 4-14.

OPTION ADJUSTMENTS

NO.	ABBREVIATION	TRACK 1	TRACK 2
1	TK-ENA	"UP"	"UP"
2	TK FO	156 HZ	86 HZ
3	CW/MD	"C"	"C"
4	UNI-BI	"b" (BI)	"b" (BI)
5	NBS-C	* RX	* RX
		* FEET	* FEET
6	CWEWT	DL (80 SEC.)	DL (80 SEC.)
7	LOS	DL (16 SEC.)	DL (16 SEC.)
8	IJ-LOS	DL (5 SEC.)	DL (5 SEC.)
9	BC	*	*
10	P-COMP	*	*
11	AX1	SEE AX ADJ.	SEE AX ADJ.
12	AX2	SEE AX ADJ.	SEE AX ADJ.
13	AX3	SEE AX ADJ.	SEE AX ADJ.
17	MDR-AX/OF-TK	0'	0'
	CJ-LOS	DL (0)	DL (0)
	PJ-DET	DL (15 SEC.)	DL (15 SEC.)
	PJ-RX	DL (15)	DL (15)
18	MD-TMR	DL (10 MIN.)	DL (10 MIN.)
19	MIN-WT	DL (0)	DL (0)
20	FS-RX	DL (0)	DL (0)
	FS-TM	DL (10 MIN.)	DL (10 MIN.)
21	POS-RX	DL (0)	DL (0)
	POS-TM	DL (0)	DL (0)
22	AR-RX	DL (0)	DL (0)
	AR-TM	DL (10 MIN.)	DL (10 MIN.)
47	ATO-RX	UP	UP
48	PF-ENA	"dn"	"dn"

AX ADJUSTMENTS

NO.	ABBREVIATION	AX 1	AX 2	AX 3
1	TK-ASN	2	1	1
2	OF-TK1	NA	525'	1672'
3	OF-TK2	1909'	NA	NA
4	WT	33 SEC.	32 SEC.	34 SEC.
5	MD-RST	(1)	(0)	(0)
6	CW/MD	"C"	"C"	"C"
7	CJ-LOS	DL (0)	DL (0)	DL (0)
8	PJ-DET	DL (15 SEC.)	DL (15 SEC.)	DL (15 SEC.)
9	PJ-RX	DL (15)	DL (15)	DL (15)
10	POS-ST	"dn"	"dn"	"dn"

SWITCH INFORMATION

SWITCH	TRACK 1	TRACK 2
MASTER/SLAVE	SLAVE	SLAVE
RSI FAULT JUMPER	NA	NA
RSI-LOS JUMPER	NA	NA
TLM W1 JUMPER	PINS 1-2	
TLM W2 JUMPER	PINS 2-3	
TLM W3 JUMPER	PINS 2-3	
MINUTE TIMEOUT	5 MIN	
CW/MD	CW	
STANDBY/AUTO/NORMAL	AUTO	

NOTES: DL= DEFAULT LEVEL
NA= NON APPLICABLE

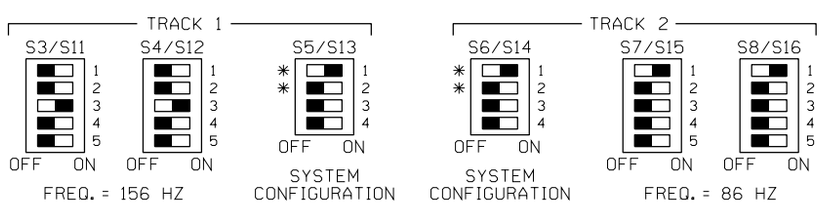

NOTES: FOR S5/S13 AND S6/S14

*1.) ACTUATOR 1 SELECTS NORMAL APPROACH WHEN SET TO ON POSITION.

*2.) WITH ACTUATOR 1 IN OFF POSITION ACTUATOR 2 SELECTS SHORT APPROACH WHEN OFF AND SELECTS VERY SHORT WHEN ON.

3.) ACTUATOR 3 OFF SELECTS HXP OPERATION.

4.) ACTUATOR 4 OFF = NORMAL MUX TABLE
ACTUATOR 4 ON = ALTERNATE MUX TABLE

ALL NEW SHEET

BURLINGTON NORTHERN SANTA FE RAILWAY

BHXP-3R2 PROGRAM INFORMATION
REMOTE XING GALESBURG, IL.

DESIGNED 06-15-11
GALESBURG PTC 2011
TCS/JML SEQ.# 47149

LS 0001 MP 163.49 SH 06 OF 12

PRELIMINARY

PLAN MUST NOT BE MODIFIED WITHOUT APPROVAL OF SIGNAL ENGINEERING
COPYRIGHT 2011 BNSF RAILWAY COMPANY. ALL RIGHTS RESERVED.

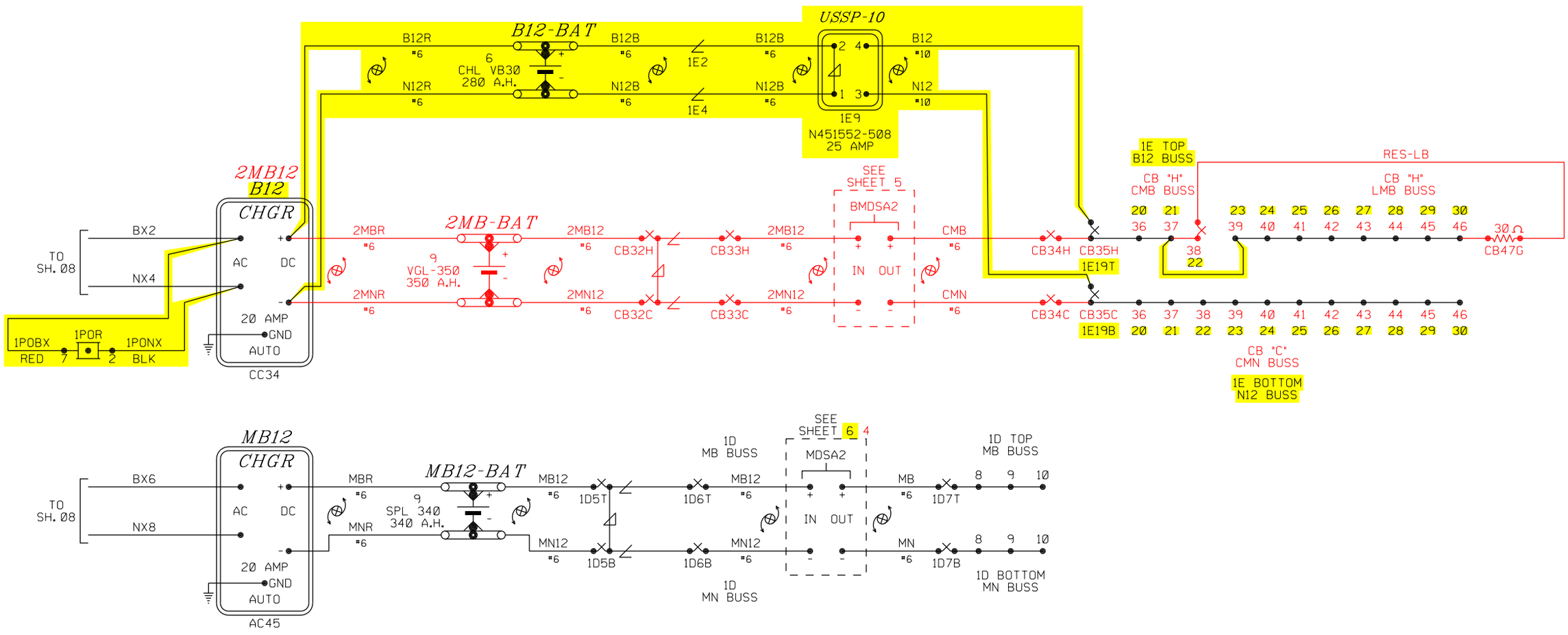

ACADEMY INTERFACE HOUSE

BURLINGTON NORTHERN SANTA FE RAILWAY

BATTERY CIRCUITS
REMOTE XING GALESBURG, IL.

IN SVC. 02-17-05 SEQ#30766
INSTALL CODED TRACK
DES: DSD/HVT COR: DSD/RSK

DESIGNED 06-15-11
GALESBURG PTC 2011
TCS/JML SEQ.# 47149

LS 0001 | MP 163.49 | SH 07 OF 12

0001163_49x07c_.dgn June 15, 2011

RED = IN YELLOW = OUT

PRELIMINARY

PLAN MUST NOT BE MODIFIED WITHOUT APPROVAL OF SIGNAL ENGINEERING

COPYRIGHT 2011 BNSF RAILWAY COMPANY. ALL RIGHTS RESERVED.

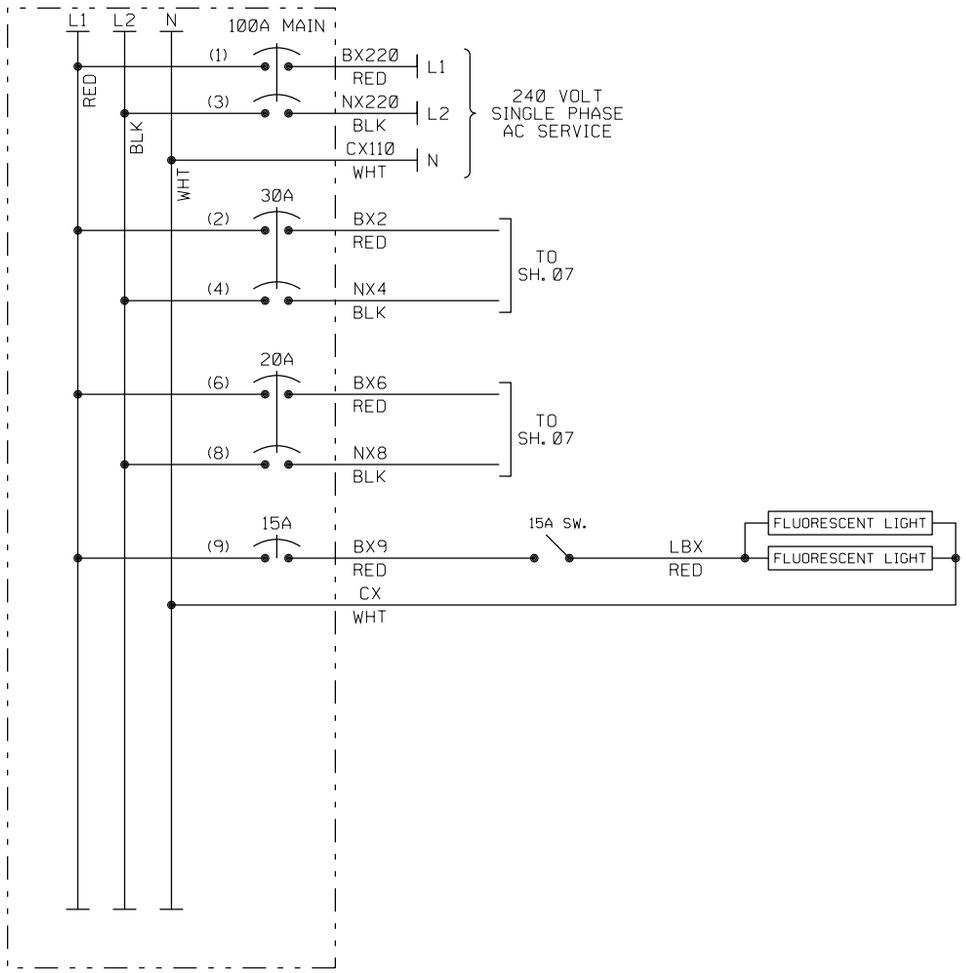

NOTES:

1. USE THE FOLLOWING COLOR CODE:
   GRN - GREEN - SAFETY EQUIPMENT GROUND
   WHT - WHITE - CX110 (NEUTRAL)
   BLK - BLACK - NX220 (L2)
   RED - RED - BX220 (L1)
   EXCEPTIONS TO THE ABOVE COLOR CODE ARE THE PRE-WIRED, SEALED ARRESTOR UNITS MOUNTED ON THE BREAKER BOX WHICH HAVE TWO BLACK AND ONE WHITE WIRE EACH.
2. = WIRE NUT
3. MINIMUM WIRE SIZE
   10 AMP - NO. 14 AWG THHN OR THWN SOLID
   20 AMP - NO. 12 AWG THHN OR THWN SOLID
   30 AMP - NO. 10 AWG THHN OR THWN SOLID
4. GROUND FAULT INTERRUPT (GFCI) MUST BE USED ON ALL CIRCUITS SERVING CONVENIENCE OUTLETS AND ANY EQUIPMENT OUTSIDE THE BUNGALOW. RECEPTACLE MOUNTED GFCI MAY BE USED INSTEAD OF BREAKER TYPE.
5. ISOLATION TRANSFORMER
   JUMPER WIRES BLK/YEL TO BLK/GRN WITH CX (WHT)
   JUMPER WIRES BLK TO BLK/RED WITH NX7 (BLK)
6. ALL GROUND WIRES RUN TO BREAKER BOX GROUND BUSS

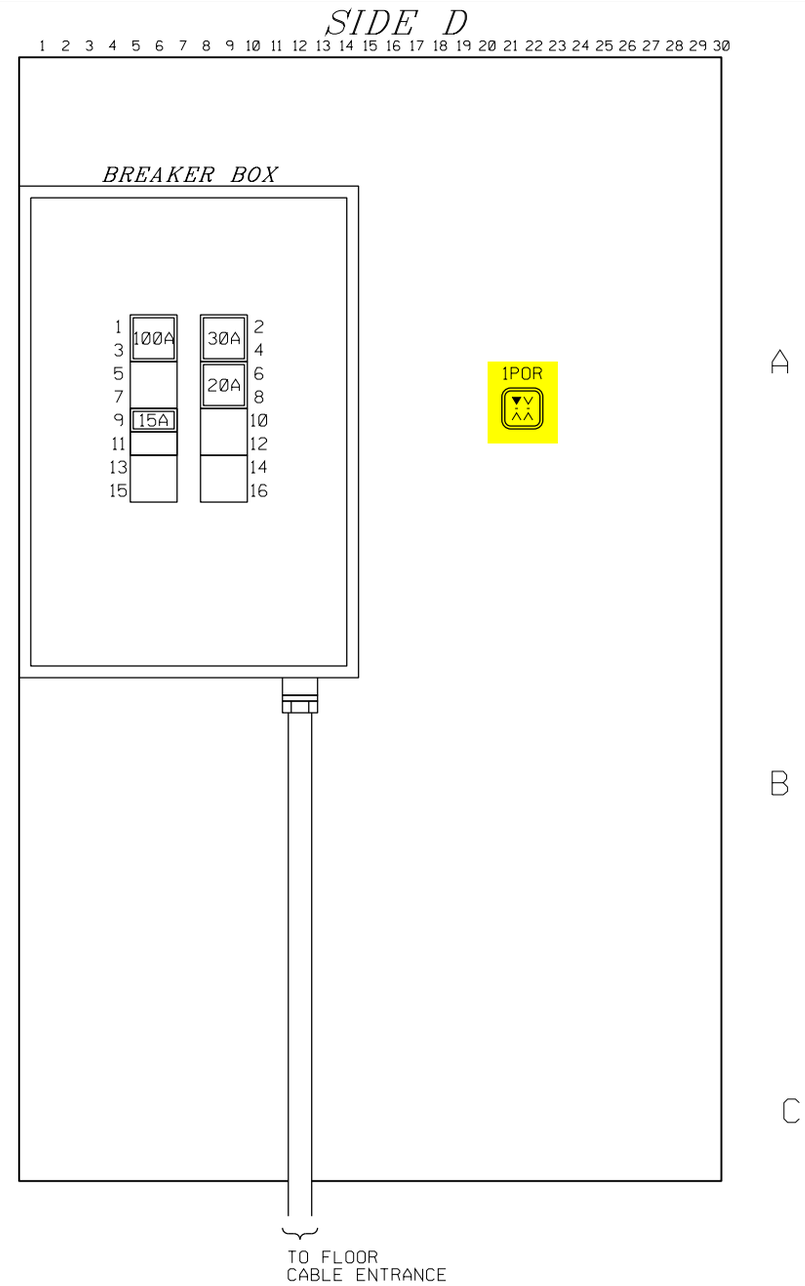

ACADEMY INTERFACE HOUSE

BURLINGTON NORTHERN SANTA FE RAILWAY

POWER DISTRIBUTION
REMOTE XING GALESBURG, IL.

IN SVC. 02-17-05 SEQ#30766 INSTALL CODED TRACK DES: DSD/HVT COR: DSD/RSK							DESIGNED 06-15-11 GALESBURG PTC 2011 TCS/JML SEQ.# 47149	LS 0001	MP 163.49	SH 08 OF 12

0001163_49x08c_.dgn June 15, 2011

RED = IN YELLOW = OUT

PRELIMINARY

PLAN MUST NOT BE MODIFIED WITHOUT APPROVAL OF SIGNAL ENGINEERING

COPYRIGHT 2011 BNSF RAILWAY COMPANY. ALL RIGHTS RESERVED.

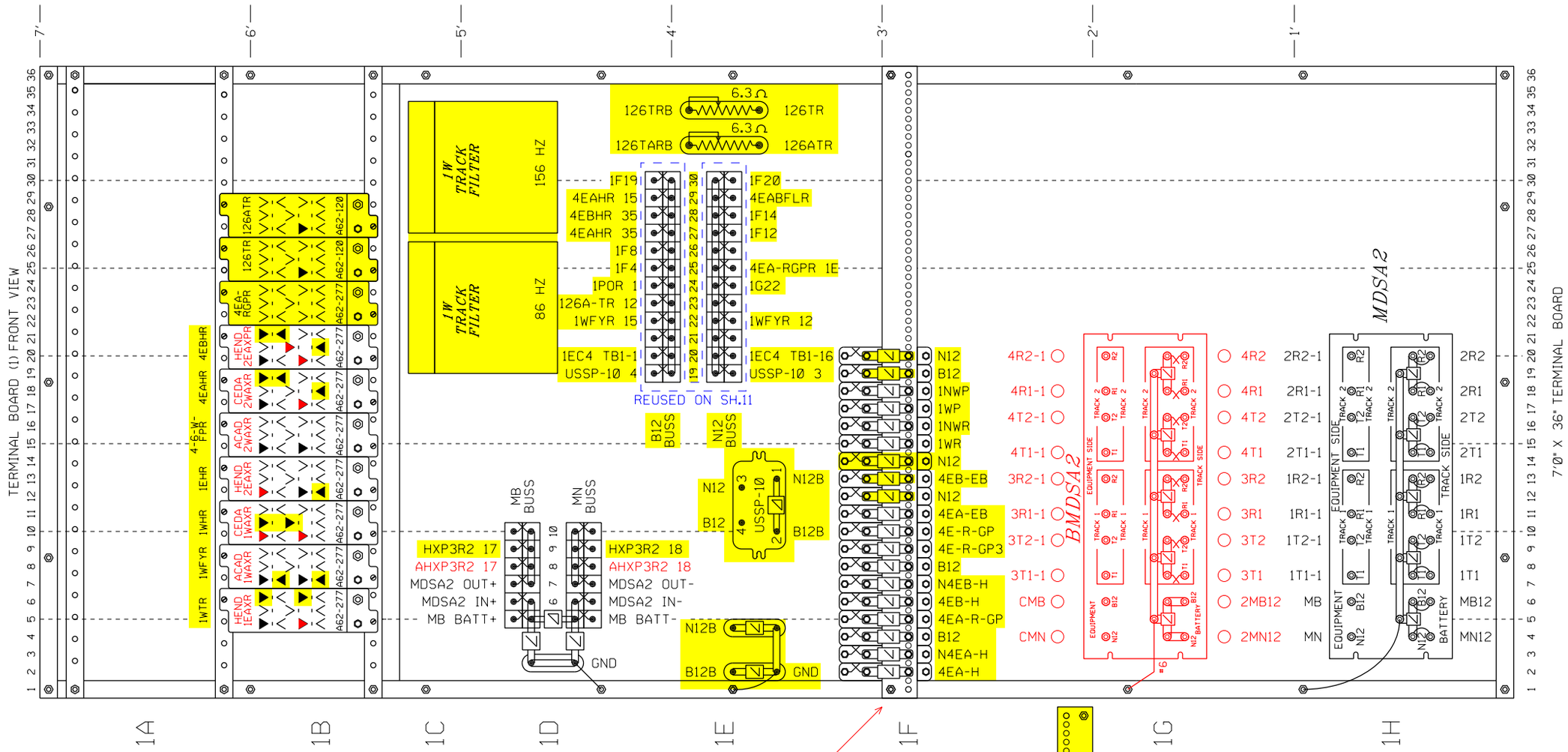

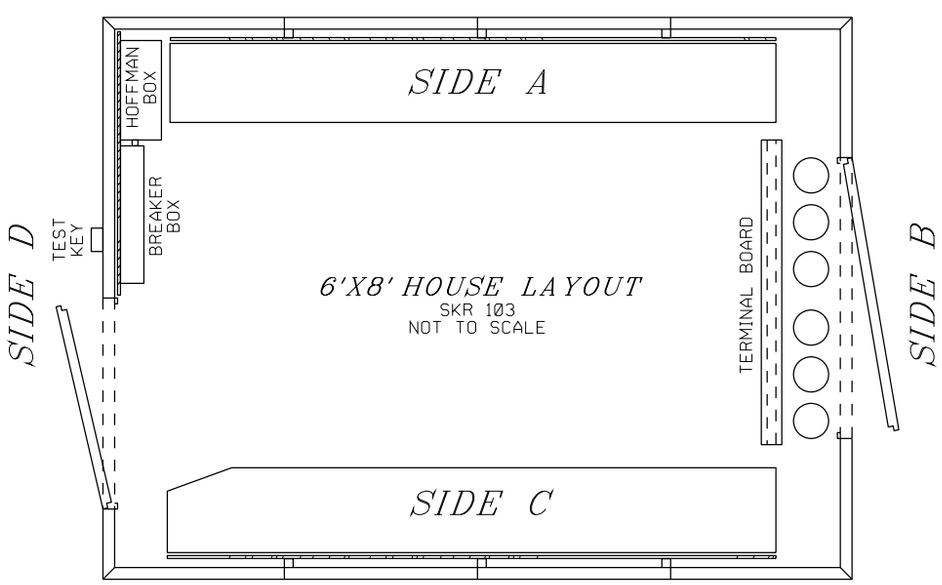

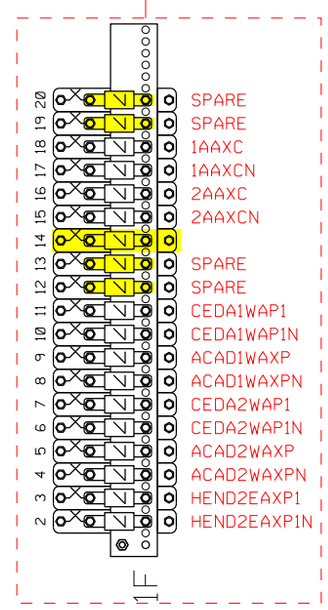

CONSTRUCTION NOTE:
RECABLE EXISING (2) 12C#14 U.G.
TO LOCATION 1F.

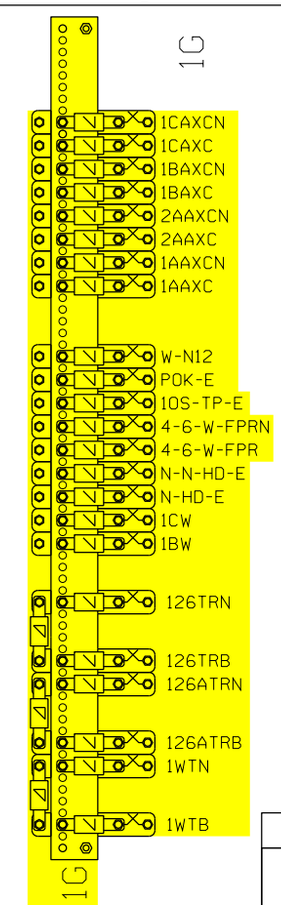

RELAY CROSS REFERENCE

GRS	SAFETRAN
A62-120	400510
A62-277	400004

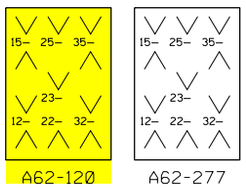

▼ = CONTACT USED

▽ = CONTACT NOT USED

ACADEMY INTERFACE HOUSE

BURLINGTON NORTHERN SANTA FE RAILWAY

TERMINAL BOARD 1 LAYOUT

REMOTE XING GALESBURG, IL.

IN SVC. 02-17-05 SEQ#30766
INSTALL CODED TRACK
DES: DSD/HVT COR: DSD/RSK

DESIGNED 06-15-11
GALESBURG PTC 2011
TCS/JML SEQ.# 47149

LS 0001 | MP 163.49 | SH 09 OF 12

0001163_49x09c_.dgn June 15, 2011

BLUE = REUSED RED = IN YELLOW = OUT

PRELIMINARY

PLAN MUST NOT BE MODIFIED WITHOUT APPROVAL OF SIGNAL ENGINEERING COPYRIGHT 2011 BNSF RAILWAY COMPANY. ALL RIGHTS RESERVED.

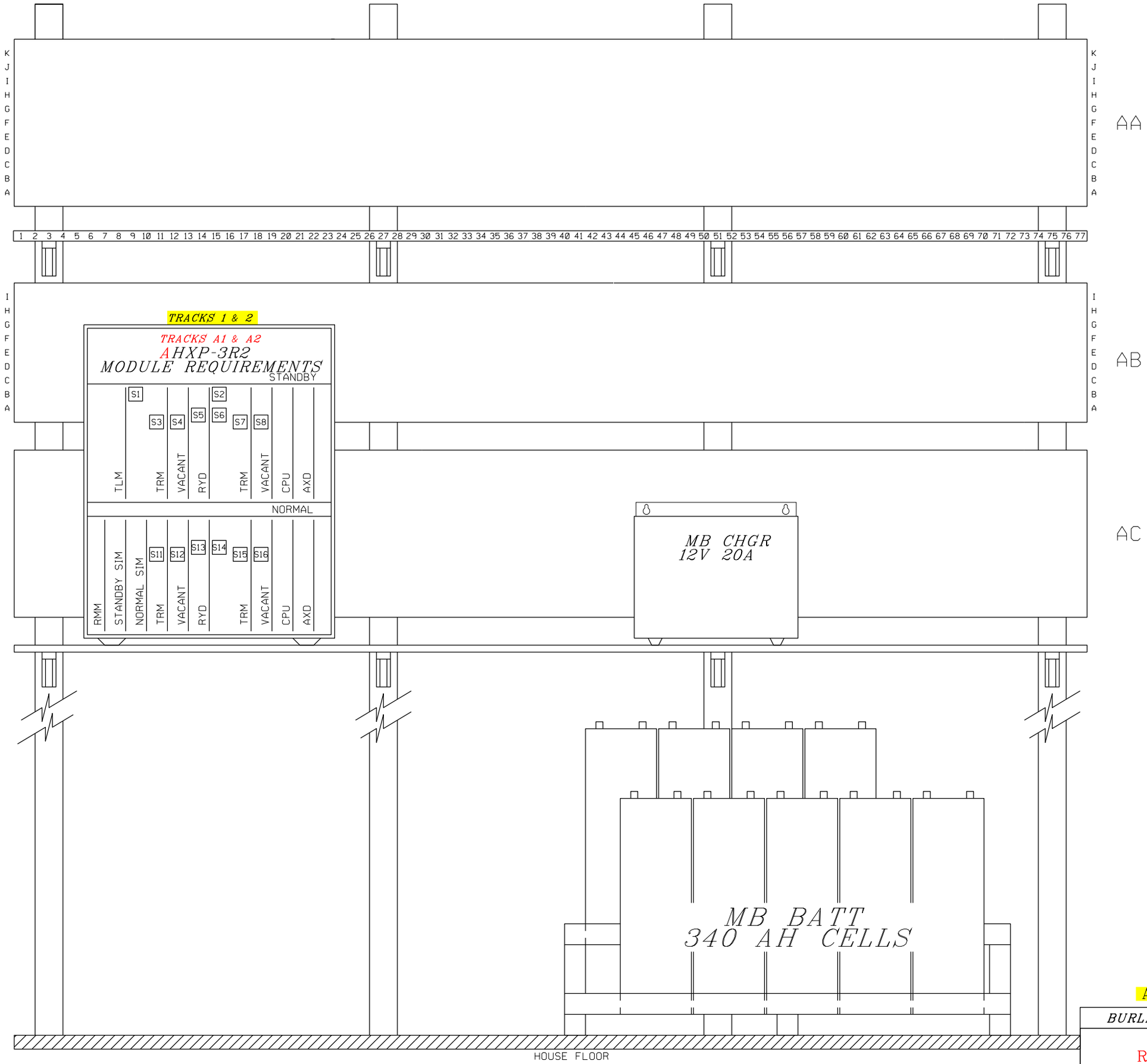

SIDE A

ACADEMY INTERFACE HOUSE

BURLINGTON NORTHERN SANTA FE RAILWAY

SIDE "A" SHELF LAYOUT

REMOTE XING GALESBURG, IL.

IN SVC. 02-17-05 SEQ#30766
INSTALL CODED TRACK
DES: DSD/HVT COR: DSD/RSK

DESIGNED 06-15-11
GALESBURG PTC 2011
TCS/JML SEQ.# 47149

LS 0001 | MP 163.49 | SH 10 OF 12

0001163_49x10c_.dgn June 15, 2011

RED = IN YELLOW = OUT

PRELIMINARY

PLAN MUST NOT BE MODIFIED WITHOUT APPROVAL OF SIGNAL ENGINEERING

COPYRIGHT 2011 BNSF RAILWAY COMPANY. ALL RIGHTS RESERVED.

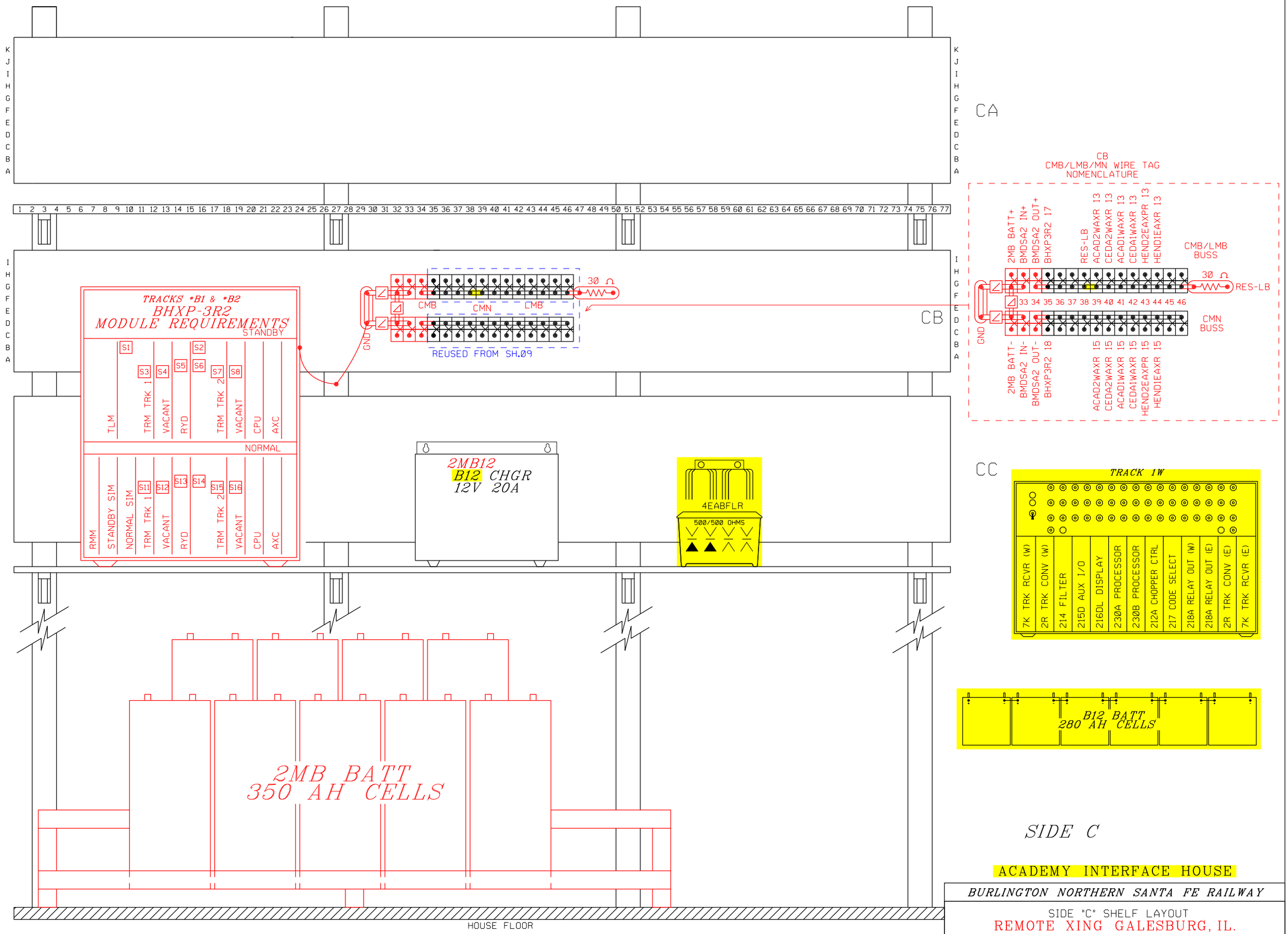

SIDE C

ACADEMY INTERFACE HOUSE

BURLINGTON NORTHERN SANTA FE RAILWAY

SIDE "C" SHELF LAYOUT

REMOTE XING GALESBURG, IL.

IN SVC. 02-17-05 SEQ#30766 INSTALL CODED TRACK DES: DSD/HVT COR: DSD/RSK						DESIGNED 06-15-11 GALESBURG PTC 2011 TCS/JML SEQ.# 47149	LS 0001	MP 163.49	SH 11 OF 12

0001163_49x11c_.dgn June 15, 2011

BLUE = REUSED RED = IN YELLOW = OUT

PRELIMINARY

PLAN MUST NOT BE MODIFIED WITHOUT APPROVAL OF SIGNAL ENGINEERING

COPYRIGHT 2011 BNSF RAILWAY COMPANY. ALL RIGHTS RESERVED.

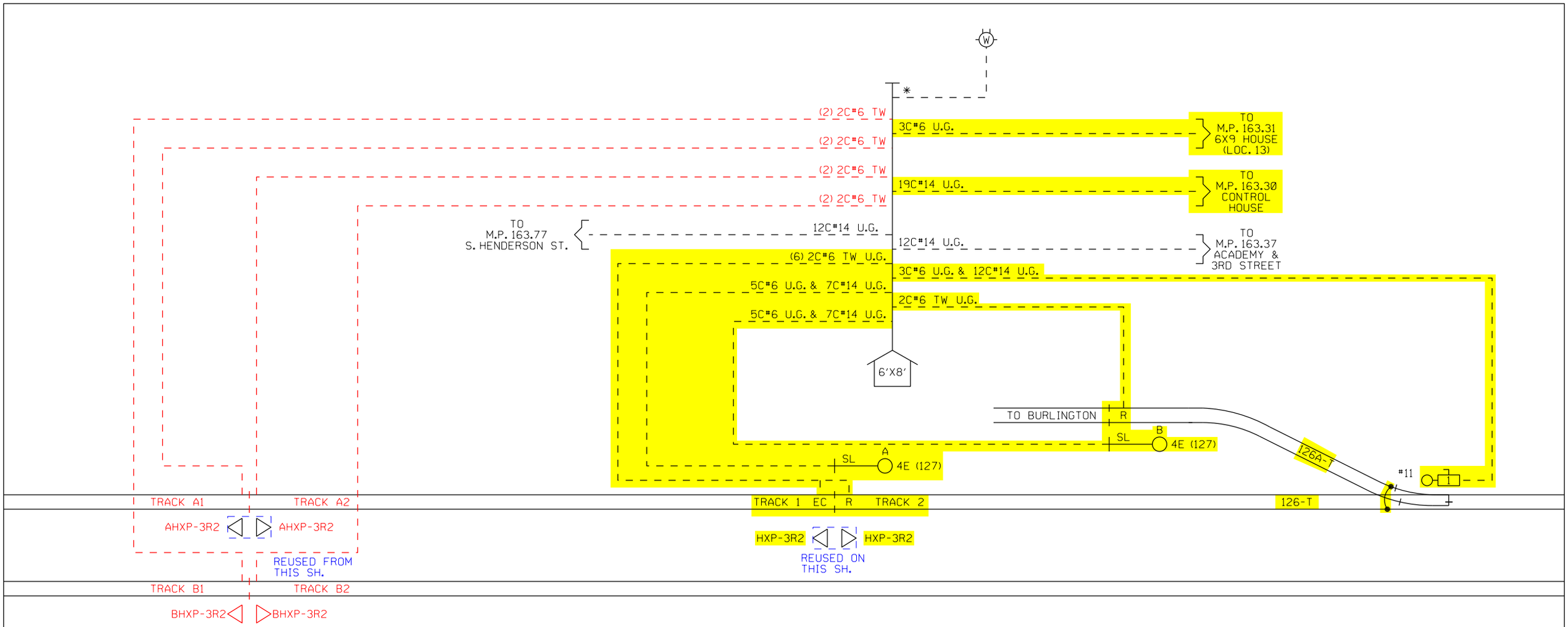

*FIELD VERIFY METER SERVICE

NOTICE:
THERE ARE FIELD VERIFY NOTES
THAT HAVE NOT BEEN VERIFIED
DATE 06-15-11

ACADEMY INTERFACE HOUSE

BURLINGTON NORTHERN SANTA FE RAILWAY

CABLE LAYOUT
REMOTE XING GALESBURG, IL.

IN SVC. 02-17-05 SEQ#30766 INSTALL CODED TRACK DES: DSD/HVT COR: DSD/							DESIGNED 06-15-11 GALESBURG PTC 2011 TCS/JML SEQ.# 47149	LS 0001	MP 163.49	SH 12 OF 12

0001163_49x12c_.dgn June 15, 2011

BLUE=REUSED RED = IN YELLOW = OUT

PRELIMINARY