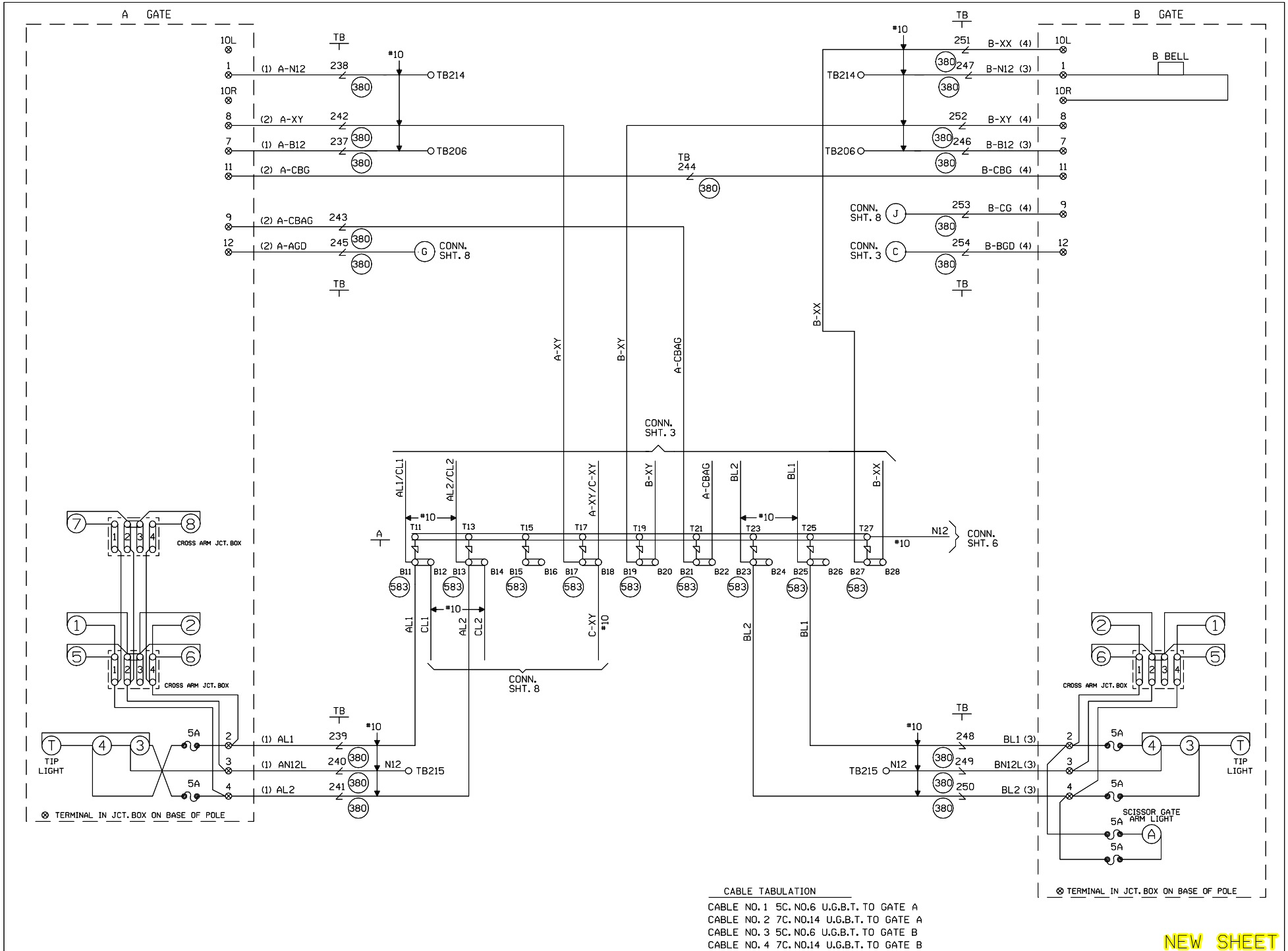

CABLE TABULATION

CABLE NO. 1 5C. NO.6 U.G.B.T. TO GATE A
CABLE NO. 2 7C. NO.14 U.G.B.T. TO GATE A
CABLE NO. 3 5C. NO.6 U.G.B.T. TO GATE B
CABLE NO. 4 7C. NO.14 U.G.B.T. TO GATE B

NEW SHEET

Designed: 03/08/13
NAGLE CORRIDOR PROJECT. REPLACE DC CIRCUITS W/ CWT FROM M.P. 9.68 TO M.P. 12.45
Rec#: WO#: 11289
IS: DLD/JPW / /PRS/JTB

MODIFICATION LEVEL	
O. A. LAST LEVEL CHECKED	DU
LAST LEVEL MOD THIS TYPICAL	DU
LAST LEVEL BY DESIGNER	DU
CHANGED FROM TYPICAL?	Y

REV 01.24.11 4K 4GFTYP.5

CIRCUIT MODIFICATIONS ARE NOT TO BE MADE WITHOUT AUTHORITY FROM THE OFFICE OF SIGNAL DESIGN

Date: 03/08/13
Des: PRS
Chk: DLD/JPW
AFE: 11289

UNION PACIFIC RAILROAD

CHICAGO, ILLINOIS
OZARK AVENUE
HARVARD SUBDIVISION

Office of Sr AVP Engineering - Signal/TCO Omaha, Nebraska

Sh.: 7
DOT 173898U
MP: 12.45
ID: HAR1245.7X

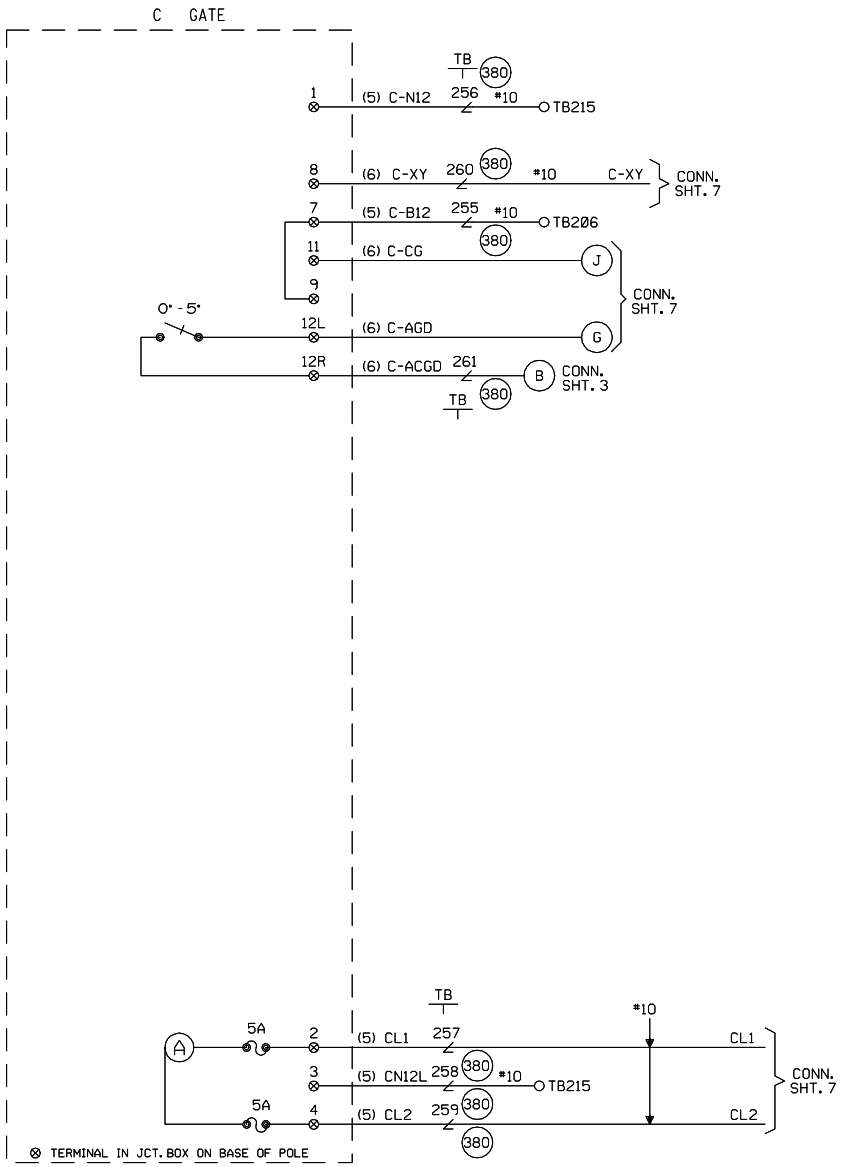

CABLE TABULATION

CABLE NO. 5 5C. NO.6 U.G.B.T. TO GATE C
CABLE NO. 6 7C. NO.14 U.G.B.T. TO GATE C

NEW SHEET

Designed: 03/08/13 NAGLE CORRIDOR PROJECT. REPLACE DC CIRCUITS W/ CWT FROM M.P. 9.68 TO M.P. 12.45 Rec#: WO#: 11289 IS: DLD/JPW / /PRS/JTB	MODIFICATION LEVEL		CIRCUIT MODIFICATIONS ARE NOT TO BE MADE WITHOUT AUTHORITY FROM THE OFFICE OF SIGNAL DESIGN	Date: 03/08/13	UNION PACIFIC RAILROAD
	O. A. LAST LEVEL CHECKED	DU		Des: PRS	CHICAGO, ILLINOIS OZARK AVENUE HARVARD SUBDIVISION
	LAST LEVEL MOD THIS TYPICAL	DU		Chk: DLD/JPW	
	LAST LEVEL BY DESIGNER	DU		AFE: 11289	Office of Sr AVP Engineering - Signal/TCO Omaha, Nebraska
	CHANGED FROM TYPICAL?	Y			
	REV 01.24.11 4K 4GFTYP.6				

Sh.:	8
DOT	173898U
MP:	12.45
ID:	HAR1245.8X

SAFETRAN PRODUCTS MODEL "S" MECHANISM

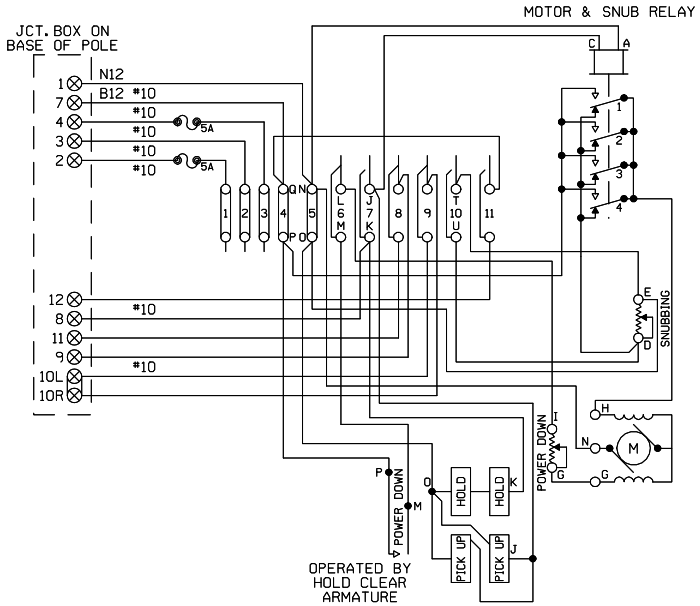

MECHANISM SHOWN IN CLEAR POSITION.

INSTALLED

CONT. SPACE NO.	CLEARING (UP)		RETURNING (DN.)		FUNCTION OF CONTACT
	CLOSES	OPENS	CLOSES	OPENS	
6	45°	—	—	45°	DOWN MOTOR CUTOUT
7	—	89°	89°	—	UP MOTOR CUTOUT
8	85°	—	—	85°	GATE NORMAL
9	3°	—	—	3°	BELL CONTROL
10	—	3°	3°	—	SNUBBING
11	—	5°	5°	—	GATE DOWN

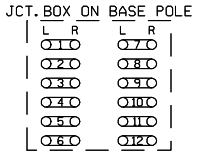

FIELD PLEASE
VERIFY GATE MECH.
WIRING AND AC
PLAN ACCORDINGLY.

FOR WIRING GATES "A" AND "B"

SAFETRAN PRODUCTS MODEL "S" MECHANISM

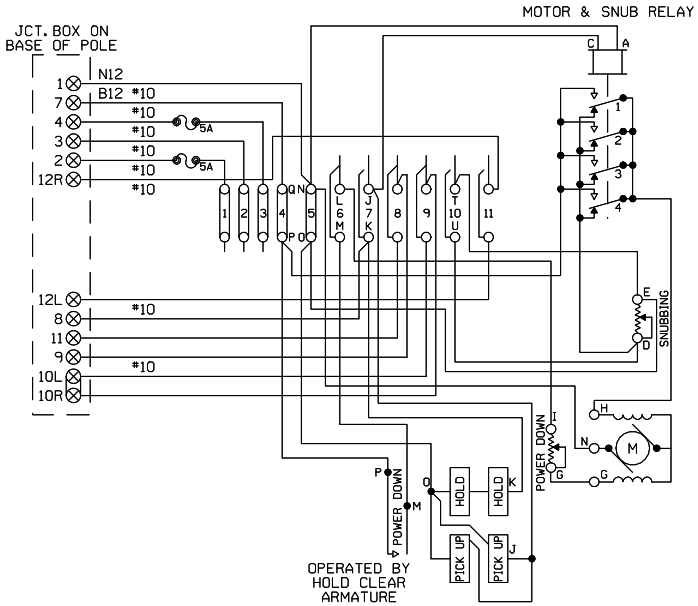

MECHANISM SHOWN IN CLEAR POSITION.

INSTALLED

CONT. SPACE NO.	CLEARING (UP)		RETURNING (DN.)		FUNCTION OF CONTACT
	CLOSES	OPENS	CLOSES	OPENS	
6	45°	—	—	45°	DOWN MOTOR CUTOUT
7	—	89°	89°	—	UP MOTOR CUTOUT
8	85°	—	—	85°	GATE NORMAL
9	3°	—	—	3°	BELL CONTROL
10	—	3°	3°	—	SNUBBING
11	—	5°	5°	—	GATE DOWN

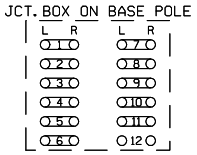

FIELD PLEASE
VERIFY GATE MECH.
WIRING AND AC
PLAN ACCORDINGLY.

FOR WIRING GATE "C"

NEW SHEET

Designed: 03/08/13
NAGLE CORRIDOR PROJECT. REPLACE DC CIRCUITS W/ CWT FROM M.P. 9.68 TO M.P. 12.45
Rec'd: WO#: 11289
ISS: DLD/JPW / /PRS/JTB

MODIFICATION LEVEL	
O. A. LAST LEVEL CHECKED	DD
LAST LEVEL MOD THIS TYPICAL	DB
LAST LEVEL BY DESIGNER	DU
CHANGED FROM TYPICAL?	Y

REV 01.02.21 GWIRING.DGN

CIRCUIT MODIFICATIONS ARE NOT TO BE MADE WITHOUT AUTHORITY FROM THE OFFICE OF SIGNAL DESIGN

Date: 03/08/13
Des: PRS
Chk: DLD/JPW
AFE: 11289

UNION PACIFIC RAILROAD
CHICAGO, ILLINOIS
OZARK AVENUE
HARVARD SUBDIVISION
Office of Sr AVP Engineering - Signal/TCO Omaha, Nebraska

Sh.: 9
DOT 173898U
MP: 12.45
ID: HAR1245.9X

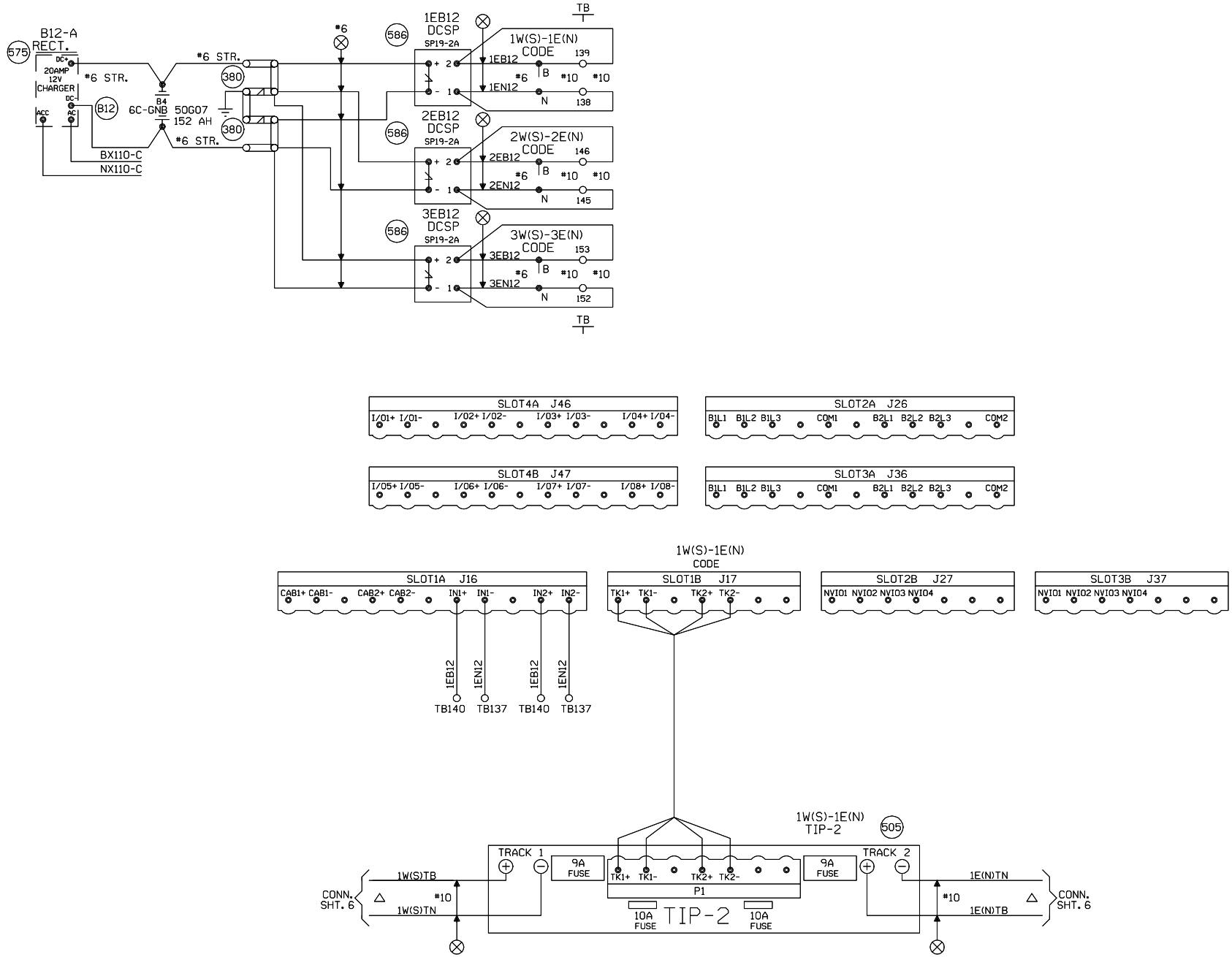

NEW SHEET

Designed: 03/08/13
NAGLE CORRIDOR
PROJECT. REPLACE DC
CIRCUITS W/ CWT FROM
M.P. 9.68 TO
M.P. 12.45
Rec#: WO#: 11289
IS: DLD/JPW
/ /PRS/JTB

MODIFICATION LEVEL	
Q. A. LAST LEVEL CHECKED	DQ
LAST LEVEL MOD THIS TYPICAL	DQ
LAST LEVEL BY DESIGNER	DU
CHANGED FROM TYPICAL?	Y

REV 02/01/08 1TE5INTC.1

CIRCUIT MODIFICATIONS ARE NOT TO BE MADE WITHOUT AUTHORITY FROM THE OFFICE OF SIGNAL DESIGN

Date: 03/08/13
Des: PRS
Chk: DLD/JPW
AFE: 11289

UNION PACIFIC RAILROAD

REGENERATIVE REPEATER
HARVARD SUBDIVISION

Office of Sr AVP Engineering - Signal/TCO Omaha, Nebraska

Sh.: 10
MP: 12.45
ID: HAR1245.10S

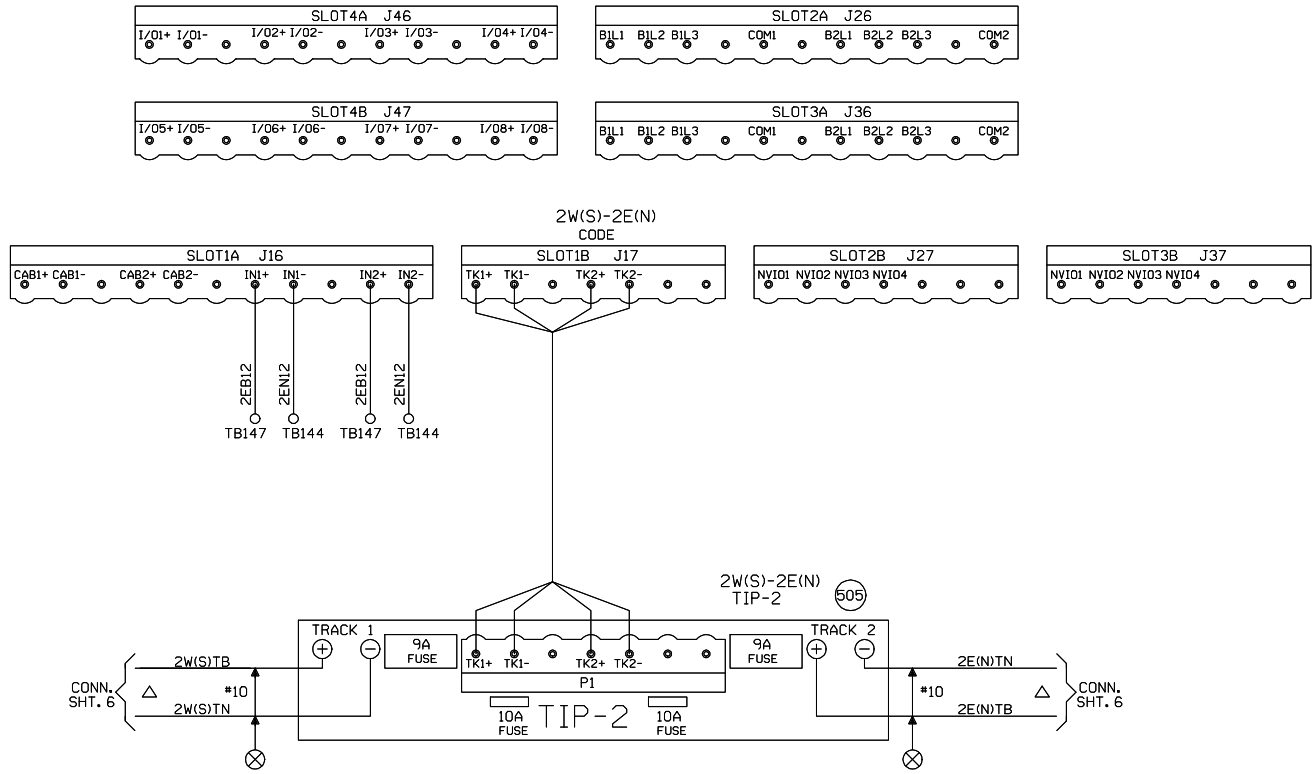

NEW SHEET

Designed: 03/08/13
NAGLE CORRIDOR
PROJECT. REPLACE DC
CIRCUITS W/ CWT FROM
M.P. 9.68 TO
M.P. 12.45
Rec#: WO#: 11289
IS: DLD/JPW
/ /PRS/JTB

MODIFICATION LEVEL	
Q. A. LAST LEVEL CHECKED	DQ
LAST LEVEL MOD THIS TYPICAL	DQ
LAST LEVEL BY DESIGNER	DU
CHANGED FROM TYPICAL?	Y

REV 02/01/08 1TE5INTC.1

CIRCUIT MODIFICATIONS ARE NOT TO BE MADE WITHOUT AUTHORITY FROM THE OFFICE OF SIGNAL DESIGN

Date: 03/08/13
Des: PRS
Chk: DLD/JPW
AFE: 11289

UNION PACIFIC RAILROAD

REGENERATIVE REPEATER
HARVARD SUBDIVISION

Office of Sr AVP Engineering - Signal/TCO Omaha, Nebraska

Sh.: 11
MP: 12.45
ID: HAR1245.11S

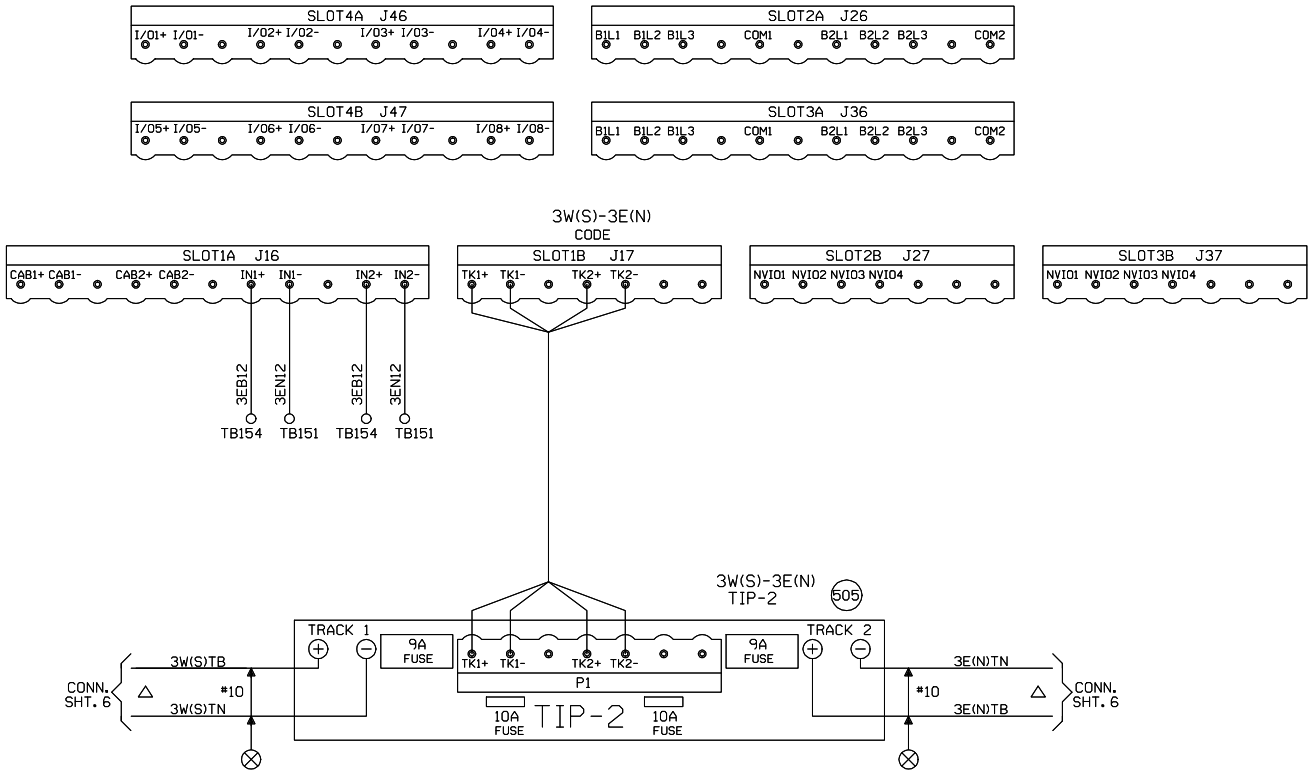

NEW SHEET

Designed: 03/08/13
NAGLE CORRIDOR
PROJECT. REPLACE DC
CIRCUITS W/ CWT FROM
M.P. 9.68 TO
M.P. 12.45
Rec#: WO#: 11289
IS: DLD/JPW
/ /PRS/JTB

MODIFICATION LEVEL	
Q. A. LAST LEVEL CHECKED	DQ
LAST LEVEL MOD THIS TYPICAL	DQ
LAST LEVEL BY DESIGNER	DU
CHANGED FROM TYPICAL?	Y

REV 02/01/08 1TE5INTC.1

CIRCUIT MODIFICATIONS ARE NOT TO BE MADE WITHOUT AUTHORITY FROM THE OFFICE OF SIGNAL DESIGN

Date: 03/08/13
Des: PRS
Chk: DLD/JPW
AFE: 11289

UNION PACIFIC RAILROAD

REGENERATIVE REPEATER
HARVARD SUBDIVISION

Office of Sr AVP Engineering - Signal/TCO Omaha, Nebraska

Sh.: 12
MP: 12.45
ID: HAR1245.12S

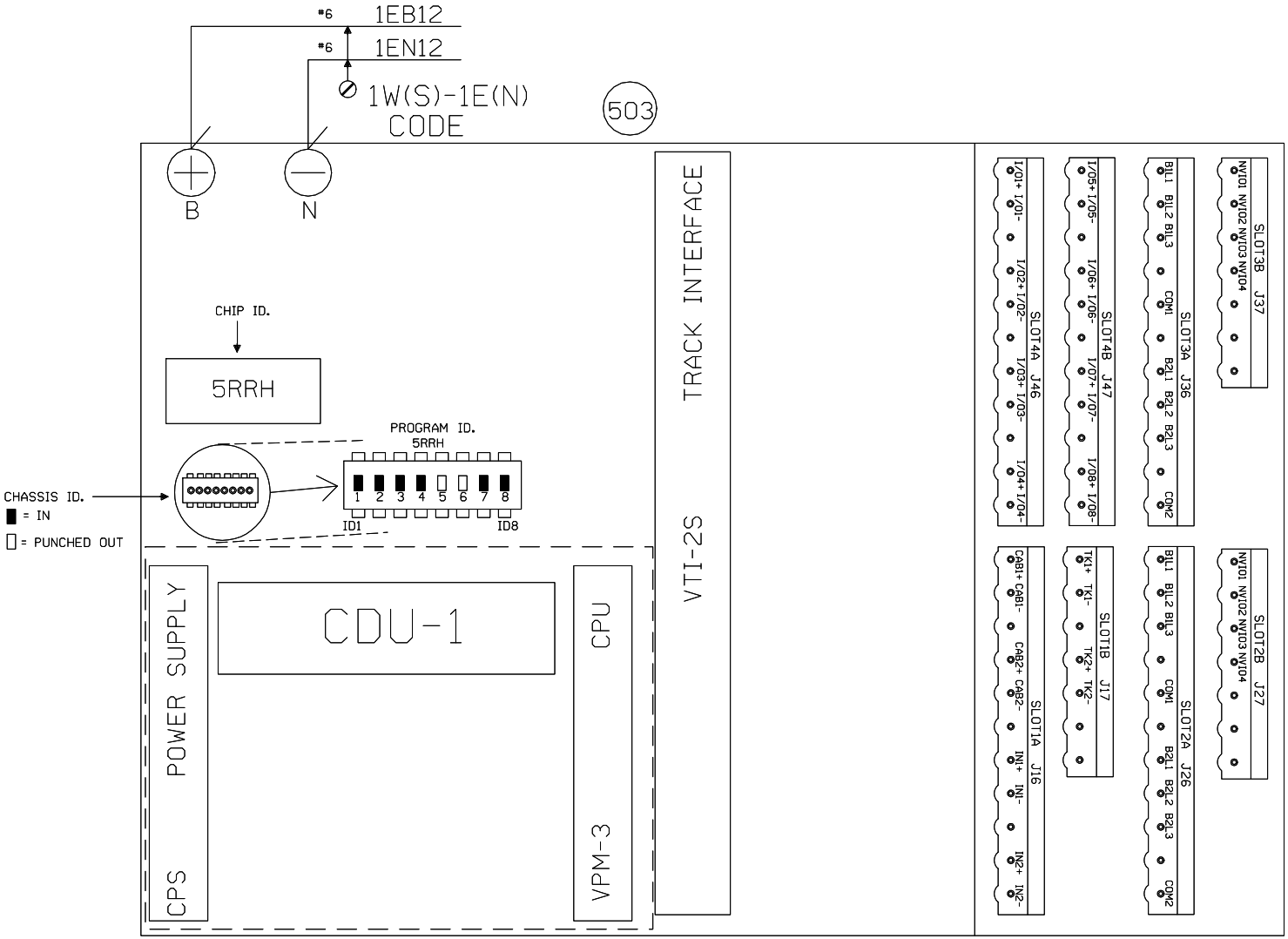

CODE 5
OPERATION SETTINGS

L ALT-5	FALSE
R ALT-5	FALSE

NEW SHEET

Designed: 03/08/13
NAGLE CORRIDOR PROJECT. REPLACE DC CIRCUITS W/ CWT FROM M.P. 9.68 TO M.P. 12.45
Rec#: WO#: 11289
IS: DLD/JPW
/ /PRS/JTB

MODIFICATION LEVEL	
Q. A. LAST LEVEL CHECKED	DQ
LAST LEVEL MOD THIS TYPICAL	DQ
LAST LEVEL BY DESIGNER	DU
CHANGED FROM TYPICAL?	Y

REV 02/01/08 1TE5INTC.3

CIRCUIT MODIFICATIONS ARE NOT TO BE MADE WITHOUT AUTHORITY FROM THE OFFICE OF SIGNAL DESIGN

Date: 03/08/13
Des: PRS
Chk: DLD/JPW
AFE: 11289

UNION PACIFIC RAILROAD

REGENERATIVE REPEATER
HARVARD SUBDIVISION

Office of Sr AVP Engineering - Signal/TCO Omaha, Nebraska

Sh.: 13
MP: 12.45
ID: HAR1245.13S

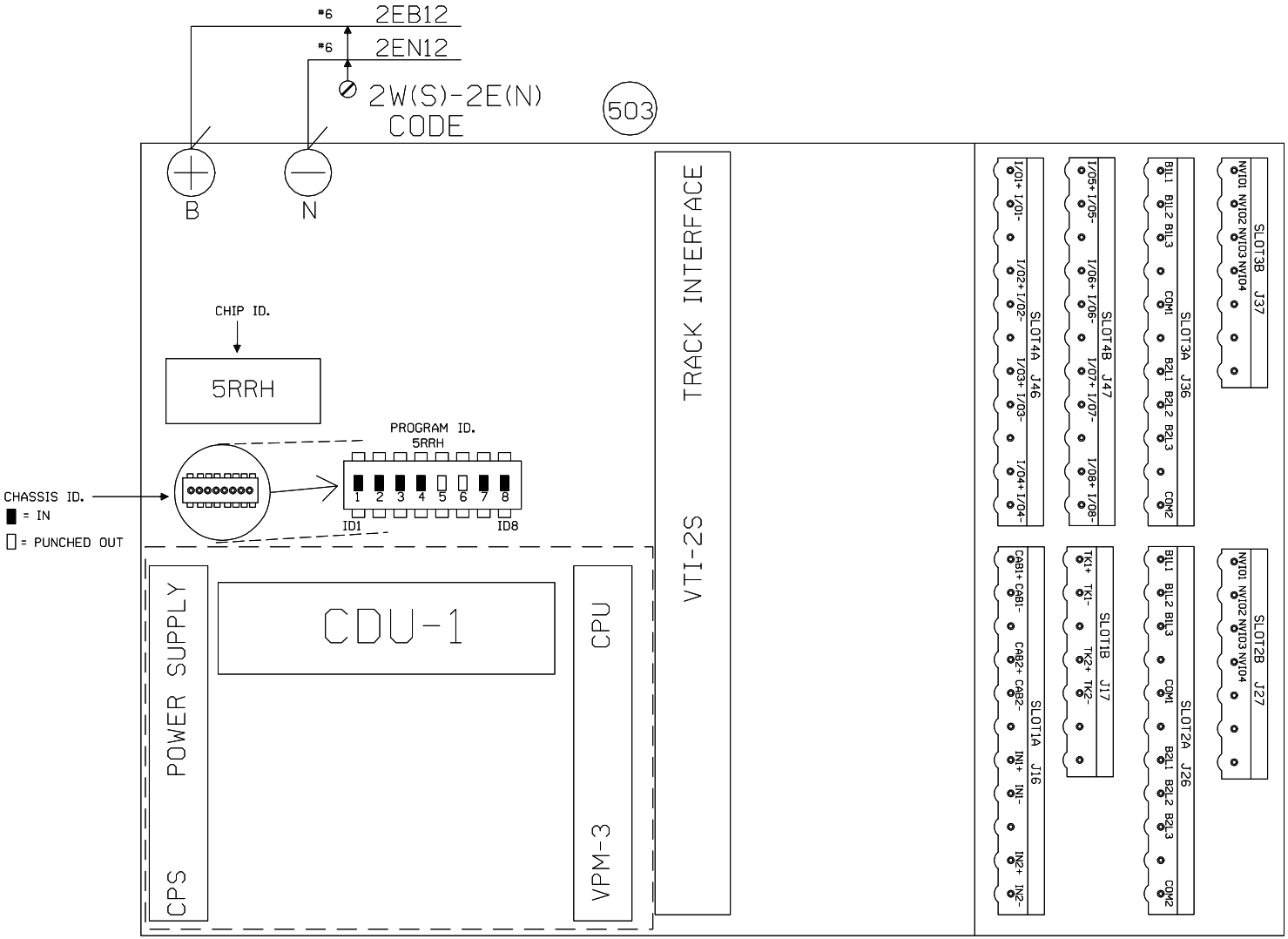

CODE 5
OPERATION SETTINGS

L ALT-5	FALSE
R ALT-5	FALSE

NEW SHEET

Designed: 03/08/13
NAGLE CORRIDOR PROJECT. REPLACE DC CIRCUITS W/ CWT FROM M.P. 9.68 TO M.P. 12.45
Rec#: WO#: 11289
IS: DLD/JPW
/ /PRS/JTB

MODIFICATION LEVEL	
Q. A. LAST LEVEL CHECKED	DQ
LAST LEVEL MOD THIS TYPICAL	DQ
LAST LEVEL BY DESIGNER	DU
CHANGED FROM TYPICAL?	Y

REV 02/01/08 1TE5INTC.3

CIRCUIT MODIFICATIONS ARE NOT TO BE MADE WITHOUT AUTHORITY FROM THE OFFICE OF SIGNAL DESIGN

Date: 03/08/13
Des: PRS
Chk: DLD/JPW
AFE: 11289

UNION PACIFIC RAILROAD

REGENERATIVE REPEATER
HARVARD SUBDIVISION

Office of Sr AVP Engineering - Signal/TCO Omaha, Nebraska

Sh.: 14
MP: 12.45
ID: HAR1245.14S

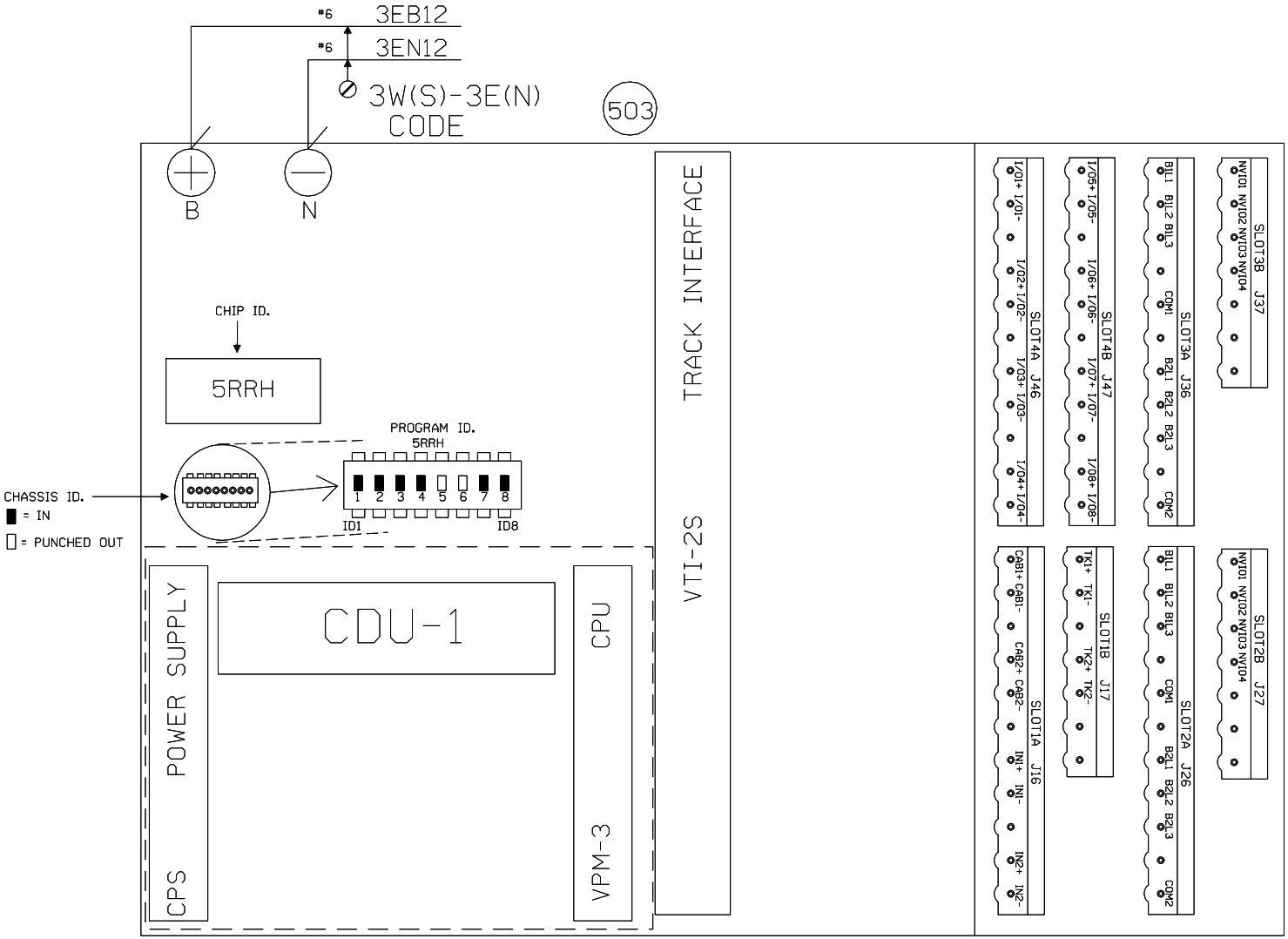

CODE 5
OPERATION SETTINGS

L ALT-5	FALSE
R ALT-5	FALSE

NEW SHEET

Designed: 03/08/13
NAGLE CORRIDOR PROJECT. REPLACE DC CIRCUITS W/ CWT FROM M.P. 9.68 TO M.P. 12.45
Rec#: WO#: 11289
IS: DLD/JPW
/ /PRS/JTB

MODIFICATION LEVEL	
Q. A. LAST LEVEL CHECKED	DQ
LAST LEVEL MOD THIS TYPICAL	DQ
LAST LEVEL BY DESIGNER	DU
CHANGED FROM TYPICAL?	Y

REV 02/01/08 1TE5INTC.3

CIRCUIT MODIFICATIONS ARE NOT TO BE MADE WITHOUT AUTHORITY FROM THE OFFICE OF SIGNAL DESIGN

Date: 03/08/13
Des: PRS
Chk: DLD/JPW
AFE: 11289

UNION PACIFIC RAILROAD

REGENERATIVE REPEATER
HARVARD SUBDIVISION

Office of Sr AVP Engineering - Signal/TCO Omaha, Nebraska

Sh.: 15
MP: 12.45
ID: HAR1245.15S

TYPICAL CONTACT CONFIGURATIONS
FOR PLUG-IN RELAYS

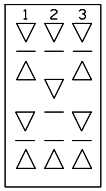

LEGEND

— = CONTACT HEEL

▽ = CONTACT FRONT

△ = CONTACT BACK

PLAN VIEW
8'x10' HOUSE
—NO SCALE—

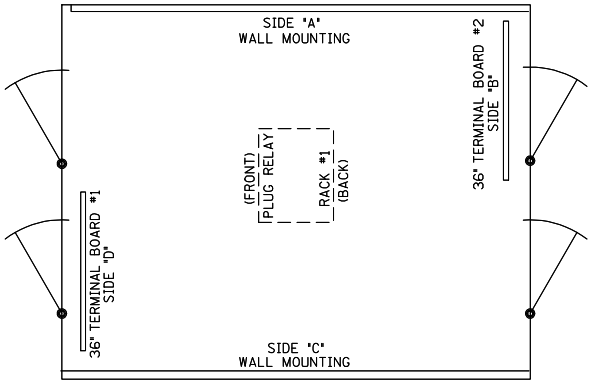

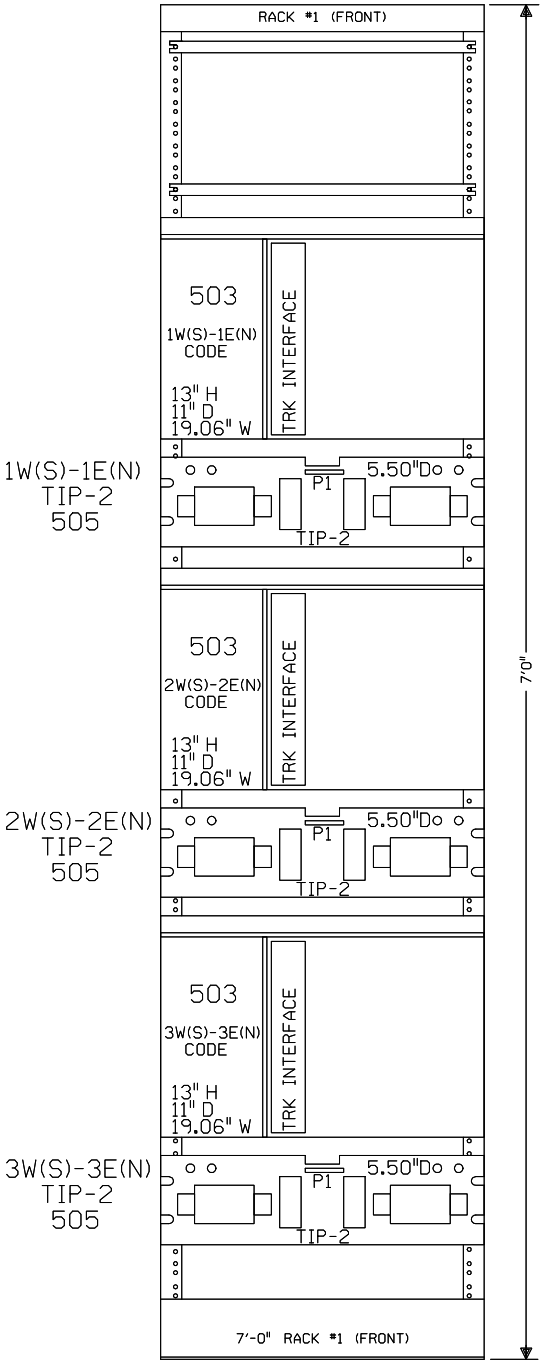

NEW SHEET

Designed: 03/08/13 NAGLE CORRIDOR PROJECT. REPLACE DC CIRCUITS W/ CWT FROM M.P. 9.68 TO M.P. 12.45 Rec#: WO#: 11289 ISs: DLD/JPW / /PRS/JTB	MODIFICATION LEVEL		CIRCUIT MODIFICATIONS ARE NOT TO BE MADE WITHOUT AUTHORITY FROM THE OFFICE OF SIGNAL DESIGN	Date: 03/08/13	UNION PACIFIC RAILROAD
	Q. A. LAST LEVEL CHECKED	DS		Des: PRS	REGENERATIVE REPEATER HARVARD SUBDIVISION
	LAST LEVEL MOD THIS TYPICAL	DS		Chk: DLD/JPW	
	LAST LEVEL BY DESIGNER	DU		AFE: 11289	Office of Sr AVP Engineering - Signal/TCO Omaha, Nebraska
	CHANGED FROM TYPICAL?	Y			
	REV 12/18/10 MCROWEOSPTC6X8.15				

Sh.: 16

MP: 12.45

ID: HAR1245.16S

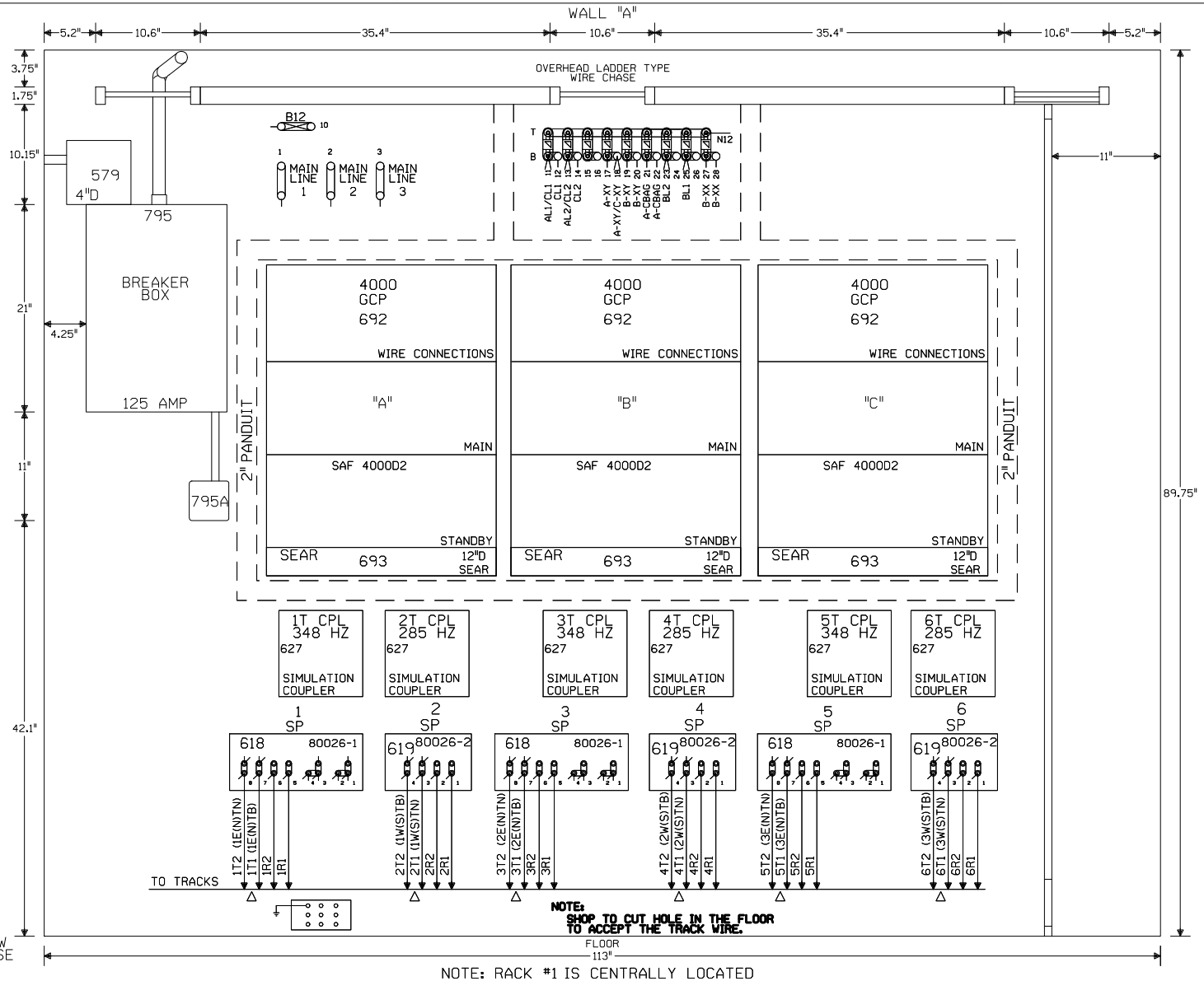

NOTE: RACK #1 IS CENTRALLY LOCATED

PLAN VIEW
8'X10' HOUSE
-NO SCALE-

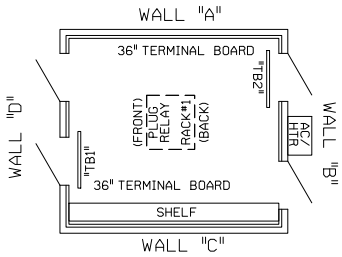

△ FIELD ENSURE PROPER TRACK POLARITY AND "AC" ACCORDINGLY

NEW SHEET

Designed: 03/08/13
NAGLE CORRIDOR PROJECT. REPLACE DC CIRCUITS W/ CWT FROM M.P. 9.68 TO M.P. 12.45
Rec#: WO#: 11289
IS: DLD/JPW
/ /PRS/JTB

MODIFICATION LEVEL	
Q. A. LAST LEVEL CHECKED	DU
LAST LEVEL MOD THIS TYPICAL	DU
LAST LEVEL BY DESIGNER	DU
CHANGED FROM TYPICAL?	Y

REV 07/01/11 MICROWEOS.14

CIRCUIT MODIFICATIONS ARE NOT TO BE MADE WITHOUT AUTHORITY FROM THE OFFICE OF SIGNAL DESIGN

Date:	03/08/13
Des:	PRS
Chk:	DLD/JPW
AFE:	11289

UNION PACIFIC RAILROAD
CHICAGO, ILLINOIS
OZARK AVENUE
HARVARD SUBDIVISION
Office of Sr AVP Engineering - Signal/TCO Omaha, Nebraska

Sh.:	17
DOT	173898U
MP:	12.45
ID:	HAR1245.17X

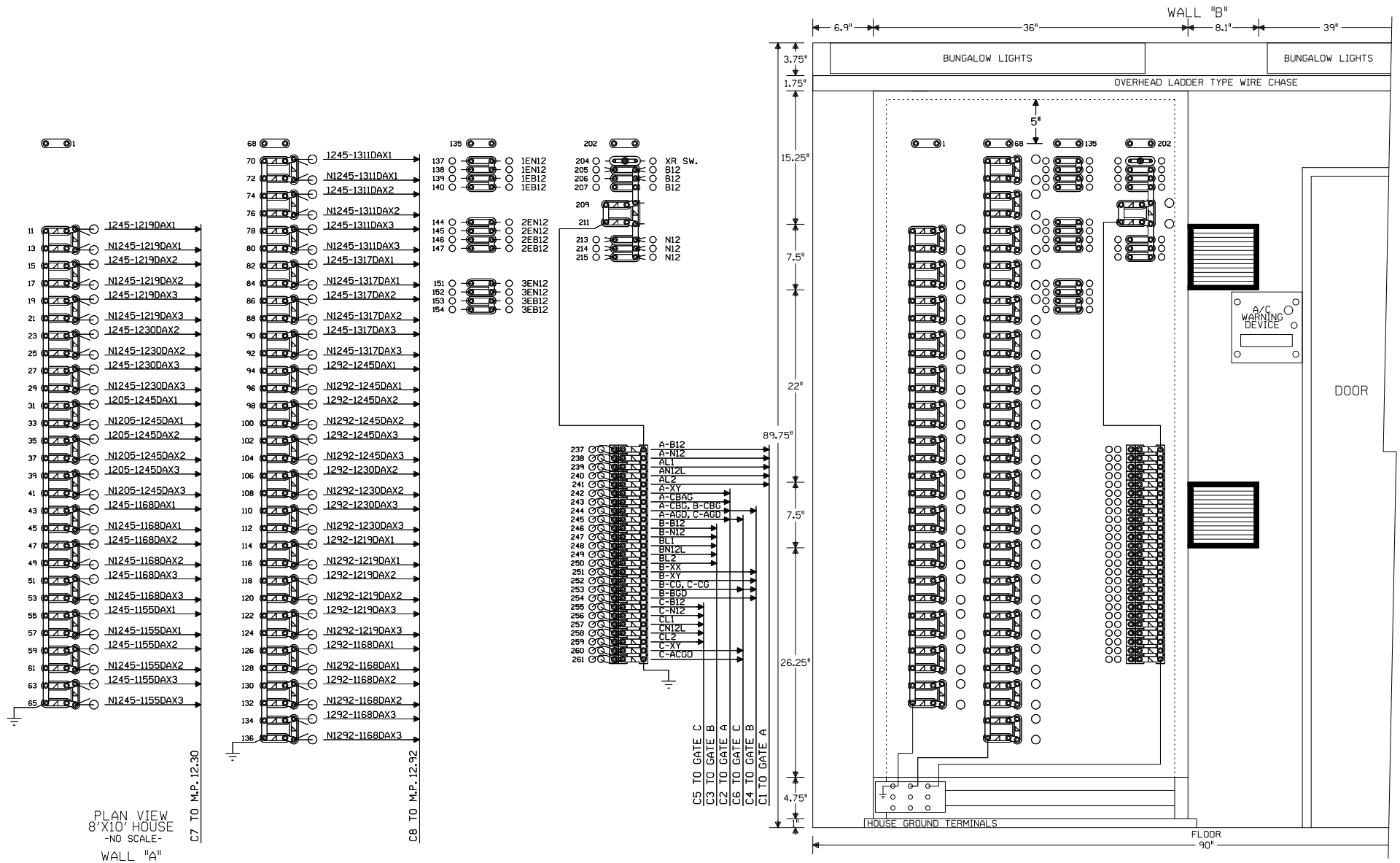

PLAN VIEW
8'X10' HOUSE
-NO SCALE-

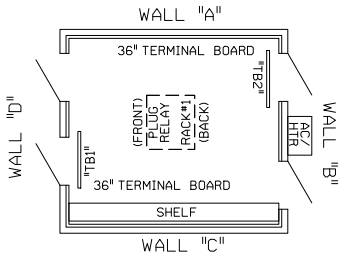

NOTE: ALL DIMENSIONS SHOWN ARE APPROXIMATE.

0 1 2 3 4 FEET

SCALE: 1.5 INCHES = 1 FOOT

NOTE: NO TEST LINKS TO BE INSTALLED WITH CROSSING LIGHTING OR GATE MECH CIRCUITRY

NEW SHEET

Designed: 03/08/13
NAGLE CORRIDOR PROJECT. REPLACE DC CIRCUITS W/ CWT FROM M.P. 9.68 TO M.P. 12.45
Rec#: WO#: 11289
IS: DLD/JPW
/ /PRS/JTB

MODIFICATION LEVEL	
Q. A. LAST LEVEL CHECKED	DU
LAST LEVEL MOD THIS TYPICAL	DU
LAST LEVEL BY DESIGNER	DU
CHANGED FROM TYPICAL?	Y

REV 07/01/11 MICROWEOS.15

CIRCUIT MODIFICATIONS ARE NOT TO BE MADE WITHOUT AUTHORITY FROM THE OFFICE OF SIGNAL DESIGN

Date:	03/08/13
Des:	PRS
Chk:	DLD/JPW
AFE:	11289

UNION PACIFIC RAILROAD
CHICAGO, ILLINOIS
OZARK AVENUE
HARVARD SUBDIVISION
Office of Sr AVP Engineering - Signal/TCO Omaha, Nebraska

Sh.:	18
DOT	173898U
MP:	12.45
ID:	HAR1245.18X

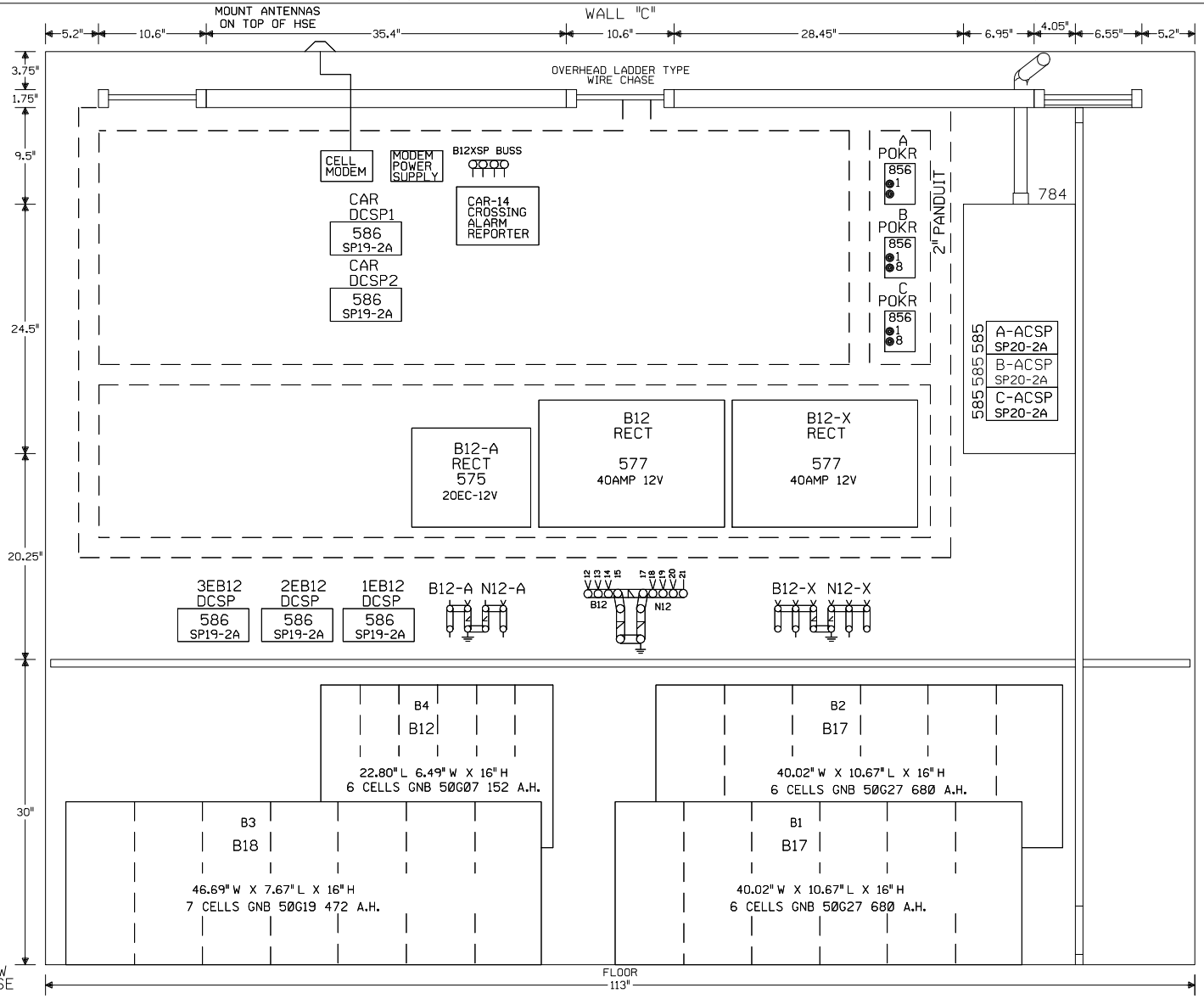

PLAN VIEW
8'X10' HOUSE
-NO SCALE-

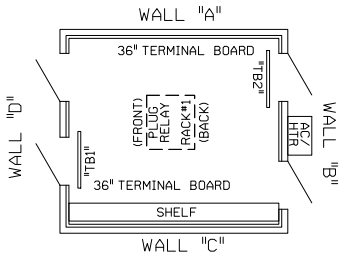

NOTE: ALL DIMENSIONS SHOWN ARE APPROXIMATE.

NEW SHEET

Designed: 03/08/13
NAGLE CORRIDOR PROJECT. REPLACE DC CIRCUITS W/ CWT FROM M.P. 9.68 TO M.P. 12.45
Rec#: WO#: 11289
IS: DLD/JPW / /PRS/JTB

MODIFICATION LEVEL	
Q. A. LAST LEVEL CHECKED	DU
LAST LEVEL MOD THIS TYPICAL	DU
LAST LEVEL BY DESIGNER	DU
CHANGED FROM TYPICAL?	Y

REV 07/01/11 MICROWEOS.16

CIRCUIT MODIFICATIONS ARE NOT TO BE MADE WITHOUT AUTHORITY FROM THE OFFICE OF SIGNAL DESIGN

Date: 03/08/13
Des: PRS
Chk: DLD/JPW
AFE: 11289

UNION PACIFIC RAILROAD
CHICAGO, ILLINOIS
OZARK AVENUE
HARVARD SUBDIVISION
Office of Sr AVP Engineering - Signal/TCO Omaha, Nebraska

Sh.: 19
DOT 173898U
MP: 12.45
ID: HAR1245.19X