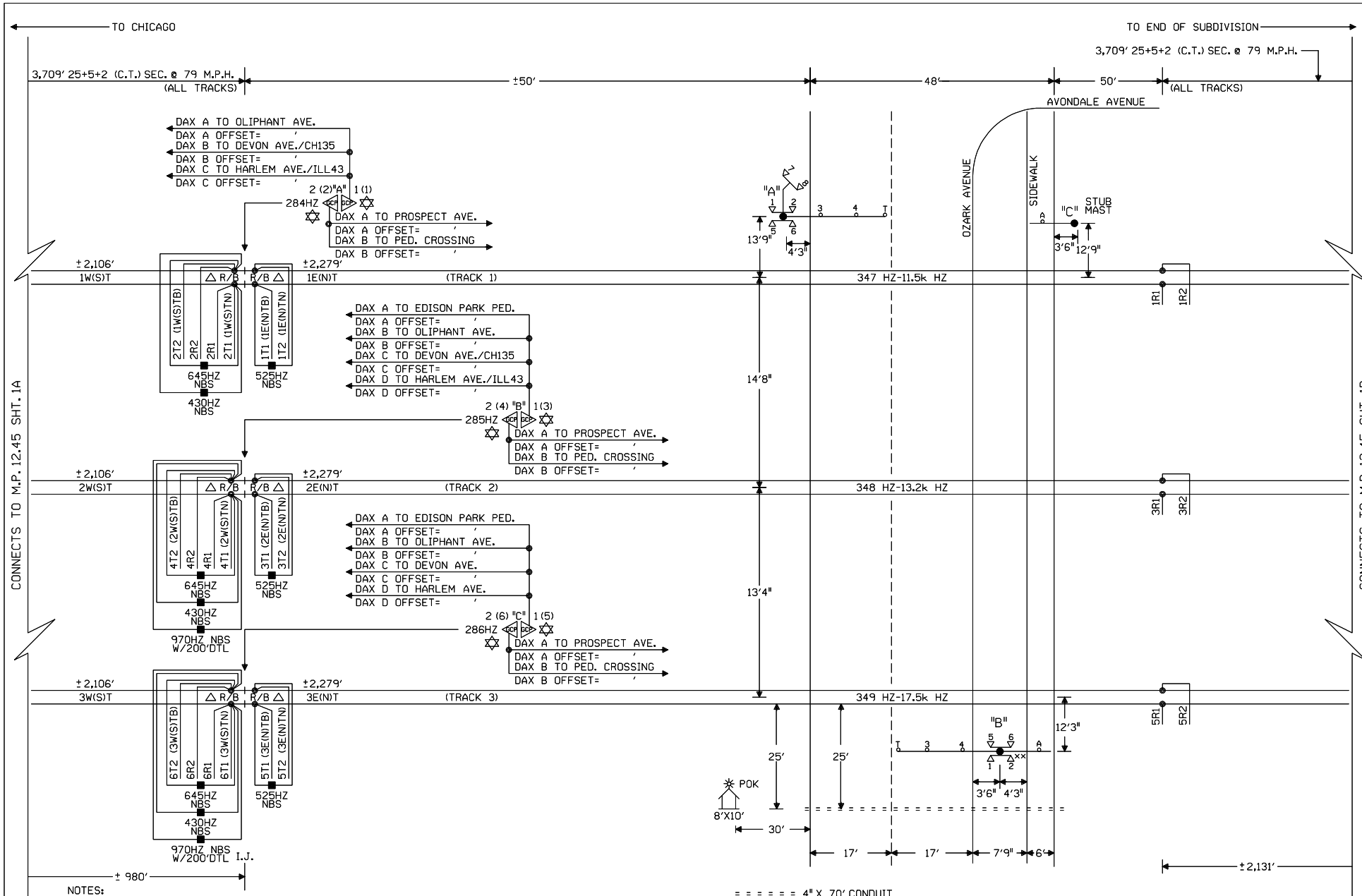


NOTES:

⊗ = TWISTED WIRES INSULATED 1 TWIST PER FT. ALL TRACK WIRES 2C. #6

TRANSMITTER AND RECEIVER LEADS TO BE SEPARATED BY AT LEAST 12" IN TRENCH, LENGTHS SHOULD NOT EXCEED MANUFACTURER'S RECOMMENDATION.

TOP OF FOUNDATION TO BE AT SAME ELEVATION AS THE SURFACE OF THE TRAVELED WAY & NO MORE THAN 4" ABOVE THE SURFACE OF THE GROUND.

ALL BUNGALOW WIRING TO BE #16 AWG FLEX UNLESS OTHERWISE SPECIFIED EXCEPT ALL GROUND WIRE TO BE #6 AWG FLEX OR LARGER.

ALL WIRING IN GATE MECHANISM TO BE #10 "AWG FLEX".

REFER TO UP STANDARD DWG FOR BUNGALOW GROUNDING.

PORTABLE GENERATOR EXTENSION CORD FOR 240V TO 240V IS PROVIDED AS WELL AS A 120V TO 240V ADAPTER.

ALL LIGHTS TO BE 12" ROUNDELS.

= = = = = = 4" X 70' CONDUIT

LIGHTS: LED LIGHTS ← EXISTING
xx = BELL

GATE A: 23'
GATE B: 19'4"
SCISSOR GATE B: 8'7" ← EXISTING
PED GATE C: 7'10"

✡ = GCP TO OPERATE IN SEMI-BI DIRECTIONAL MODE. USE TAB 627 COUPLER.

△ = ENSURE TRACK POLARITY IS TRANSPOSED ACROSS ALL INSULATED JOINTS.

W(S) ←—○—→ E(N)

NEW SHEET

| | | | | | | | | | | | |
|---|---|---|---|---|---|---|---|---|---|---|---|
| | | | | | Designed: 03/08/13 NAGLE CORRIDOR PROJECT. REPLACE DC CIRCUITS W/ CWT FROM M.P. 9.68 TO M.P. 12.45 Rec#: 11289 ISs DLD/JPW / /PRS/JTB | MODIFICATION LEVEL | | CIRCUIT MODIFICATIONS ARE NOT TO BE MADE WITHOUT AUTHORITY FROM THE OFFICE OF SIGNAL DESIGN | Date: 03/08/13 | UNION PACIFIC RAILROAD | Sh.: 1 |
| | | | | | | Q. A. LAST LEVEL CHECKED | DU | | Des: PRS | CHICAGO, ILLINOIS | DOT 173898U |
| | | | | | | LAST LEVEL MOD THIS TYPICAL | DU | | Chk: DLD/JPW | OZARK AVENUE | MP: 12.45 |
| | | | | | | LAST LEVEL BY DESIGNER | DU | | AFE: 11289 | HARVARD SUBDIVISION | ID: HAR1245.1X |
| | | | | | | CHANGED FROM TYPICAL? | Y | | | Office of Sr AVP Engineering - Signal/TCO Omaha, Nebraska | |
| | | | | | | REV 01.24.11 4K 2TKUGTYP.1 | | | | | |

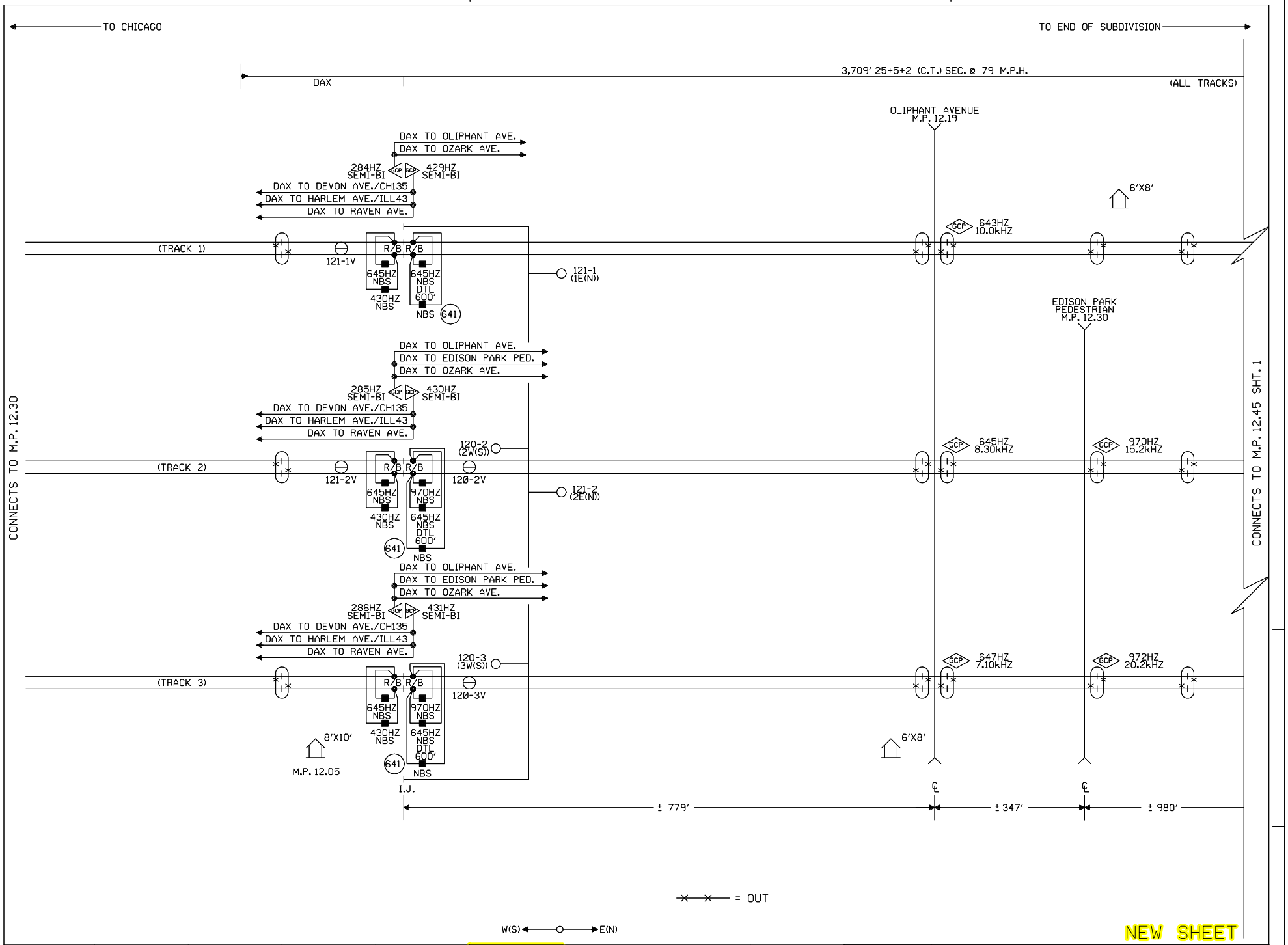


Designed: 03/08/13
NAGLE CORRIDOR PROJECT. REPLACE DC CIRCUITS W/ CWT FROM M.P. 9.68 TO M.P. 12.45
Rec#: 151 WO#: 11289 DLD/JPW / /PRS/JTB

| MODIFICATION LEVEL | |
|---|---|
| O. A. LAST LEVEL CHECKED | DU |
| LAST LEVEL MOD THIS TYPICAL | DU |
| LAST LEVEL BY DESIGNER | DU |
| CHANGED FROM TYPICAL? | Y |

REV 01.24.11 4K 2TKUGTYP.1

CIRCUIT MODIFICATIONS ARE NOT TO BE MADE WITHOUT AUTHORITY FROM THE OFFICE OF SIGNAL DESIGN

Date: 03/08/13
Des: PRS
Chk: DLD/JPW
AFE: 11289

**UNION PACIFIC RAILROAD**
CHICAGO, ILLINOIS
OZARK AVENUE
HARVARD SUBDIVISION
Office of Sr AVP Engineering - Signal/TCO Omaha, Nebraska

Sh.: 1A
DOT 173898U
MP: 12.45
ID: HAR1245.1AX

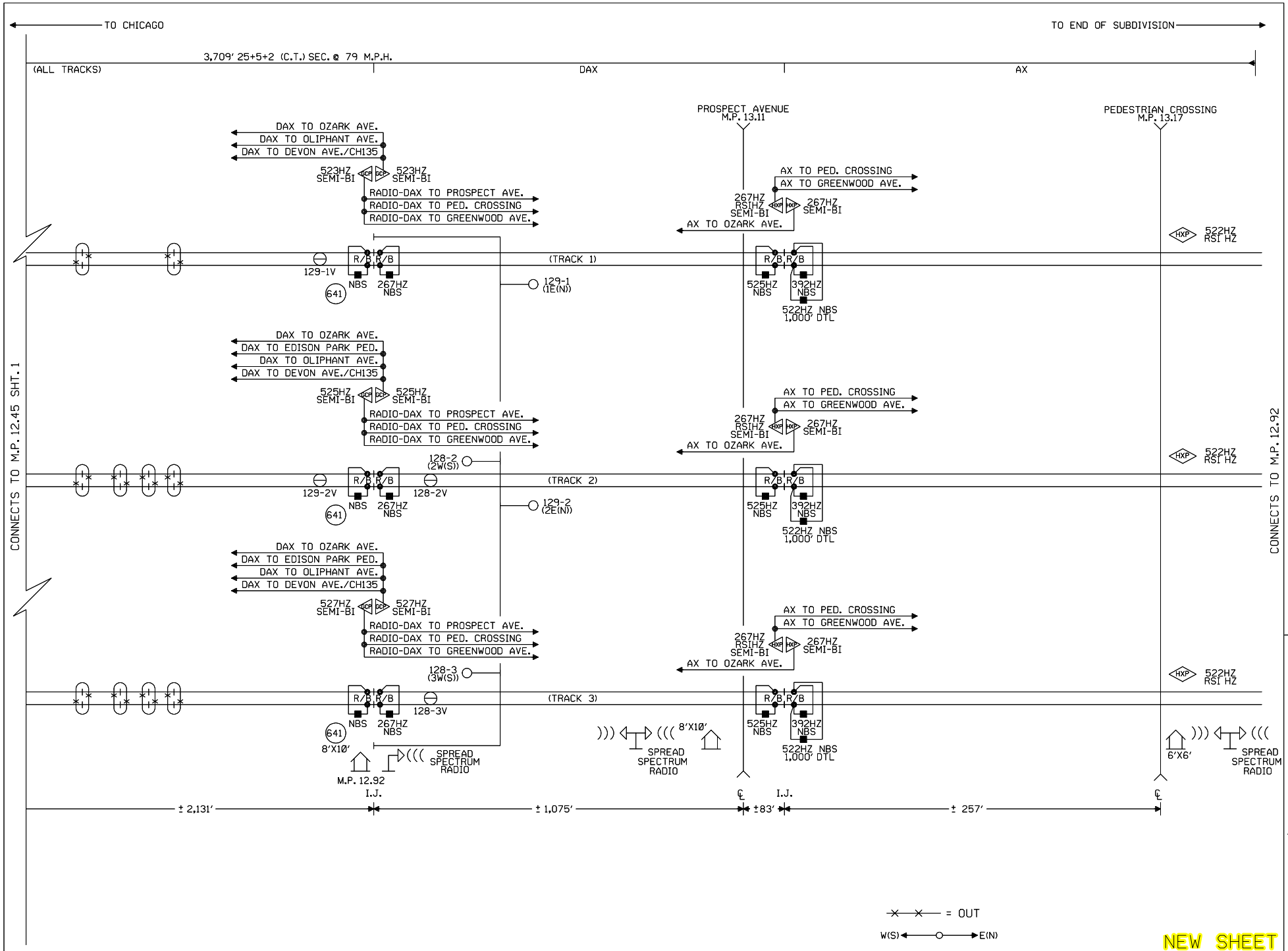


NEW SHEET

Designed: 03/08/13
NAGLE CORRIDOR PROJECT. REPLACE DC CIRCUITS W/ CWT FROM M.P. 9.68 TO M.P. 12.45
Rec#: WO#: 11289
IS: DLD/JPW / /PRS/JTB

| MODIFICATION LEVEL | |
|---|---|
| Q. A. LAST LEVEL CHECKED | DU |
| LAST LEVEL MOD THIS TYPICAL | DU |
| LAST LEVEL BY DESIGNER | DU |
| CHANGED FROM TYPICAL? | Y |

REV 01.24.11 4K 2TKUGTYP.1

CIRCUIT MODIFICATIONS ARE NOT TO BE MADE WITHOUT AUTHORITY FROM THE OFFICE OF SIGNAL DESIGN

| | |
|---|---|
| Date: | 03/08/13 |
| Des: | PRS |
| Chk: | DLD/JPW |
| AFE: | 11289 |

**UNION PACIFIC RAILROAD**

CHICAGO, ILLINOIS
OZARK AVENUE
HARVARD SUBDIVISION

Office of Sr AVP Engineering - Signal/TCO Omaha, Nebraska

| | |
|---|---|
| Sh.: | 1B |
| DOT | 173898U |
| MP: | 12.45 |
| ID: | HAR1245.1BX |

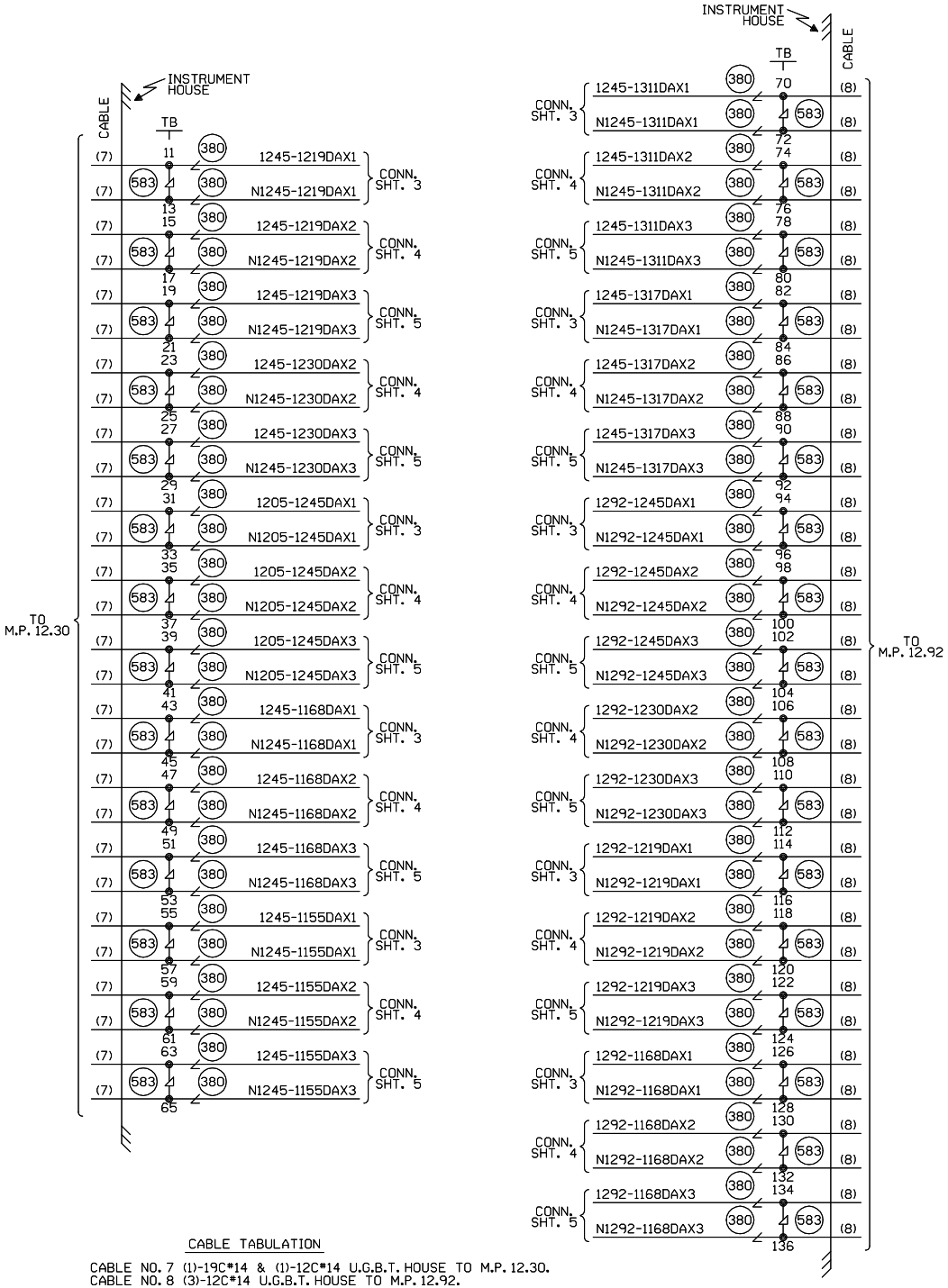


CONSTRUCTION NOTES:

1. PTMW BUNGALOW 8'X10' (P/N: 520-2721).
2. REUSE EXISTING GATES "A" & "B", AND PED GATE "C".
3. REUSE INSULATED JOINTS APPROXIMATELY 50' FROM EDGE OF SIDEWALK.

CABLE TABULATION

CABLE NO. 7 (1)-19C#14 & (1)-12C#14 U.G.B.T. HOUSE TO M.P. 12.30.
CABLE NO. 8 (3)-12C#14 U.G.B.T. HOUSE TO M.P. 12.92.

NEW SHEET

Designed: 03/08/13
NAGLE CORRIDOR PROJECT. REPLACE DC CIRCUITS W/ CWT FROM M.P. 9.68 TO M.P. 12.45
Rec#: WO#: 11289
IS: DLD/JPW
/ /PRS/JTB

| MODIFICATION LEVEL | |
|---|---|
| Q. A. LAST LEVEL CHECKED | DU |
| LAST LEVEL MOD THIS TYPICAL | DU |
| LAST LEVEL BY DESIGNER | DU |
| CHANGED FROM TYPICAL? | Y |

REV 01.24.11 4K 2TKUGTYP.1

CIRCUIT MODIFICATIONS ARE NOT TO BE MADE WITHOUT AUTHORITY FROM THE OFFICE OF SIGNAL DESIGN

Date: 03/08/13
Des: PRS
Chk: DLD/JPW
AFE: 11289

**UNION PACIFIC RAILROAD**
CHICAGO, ILLINOIS
OZARK AVENUE
HARVARD SUBDIVISION
Office of Sr AVP Engineering - Signal/TCO Omaha, Nebraska

Sh.: 1C
DOT 173898U
MP: 12.45
ID: HAR1245.1CX

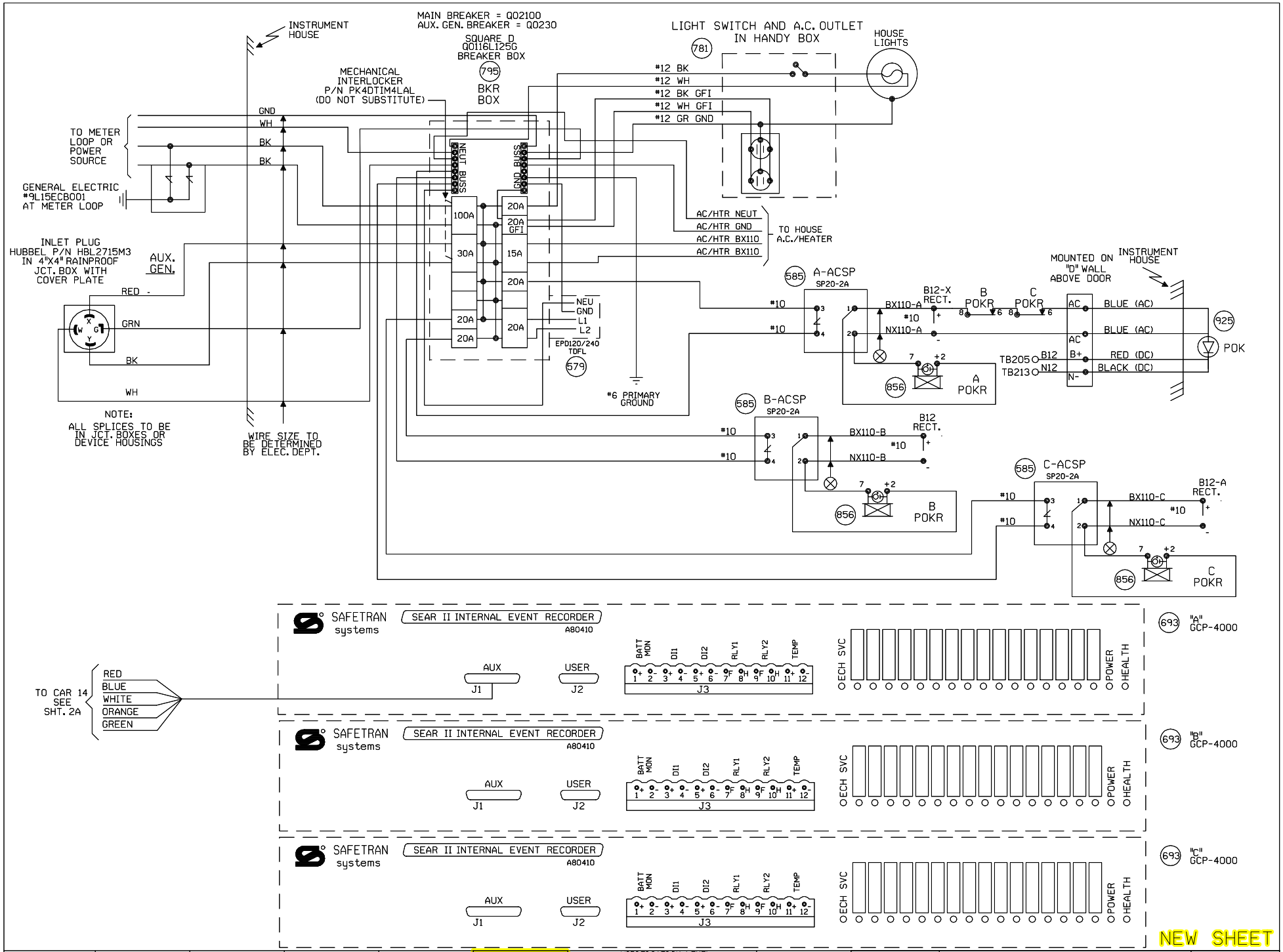


Designed: 03/08/13
NAGLE CORRIDOR PROJECT. REPLACE DC CIRCUITS W/ CWT FROM M.P. 9.68 TO M.P. 12.45
Rec#: 151 WO#: 11289 DLD/JPW /PRS/JTB
REV 01.24.11 4K SEARAC.2

| MODIFICATION LEVEL | |
|---|---|
| Q. A. LAST LEVEL CHECKED | DU |
| LAST LEVEL MOD THIS TYPICAL | DU |
| LAST LEVEL BY DESIGNER | DU |
| CHANGED FROM TYPICAL? | Y |

CIRCUIT MODIFICATIONS ARE NOT TO BE MADE WITHOUT AUTHORITY FROM THE OFFICE OF SIGNAL DESIGN

Date: 03/08/13
Des: PRS
Chk: DLD/JPW
AFE: 11289

**UNION PACIFIC RAILROAD**
CHICAGO, ILLINOIS
OZARK AVENUE
HARVARD SUBDIVISION
Office of Sr AVP Engineering - Signal/TCO Omaha, Nebraska

Sh.: 2
DOT 173898U
MP: 12.45
ID: HAR1245.2X

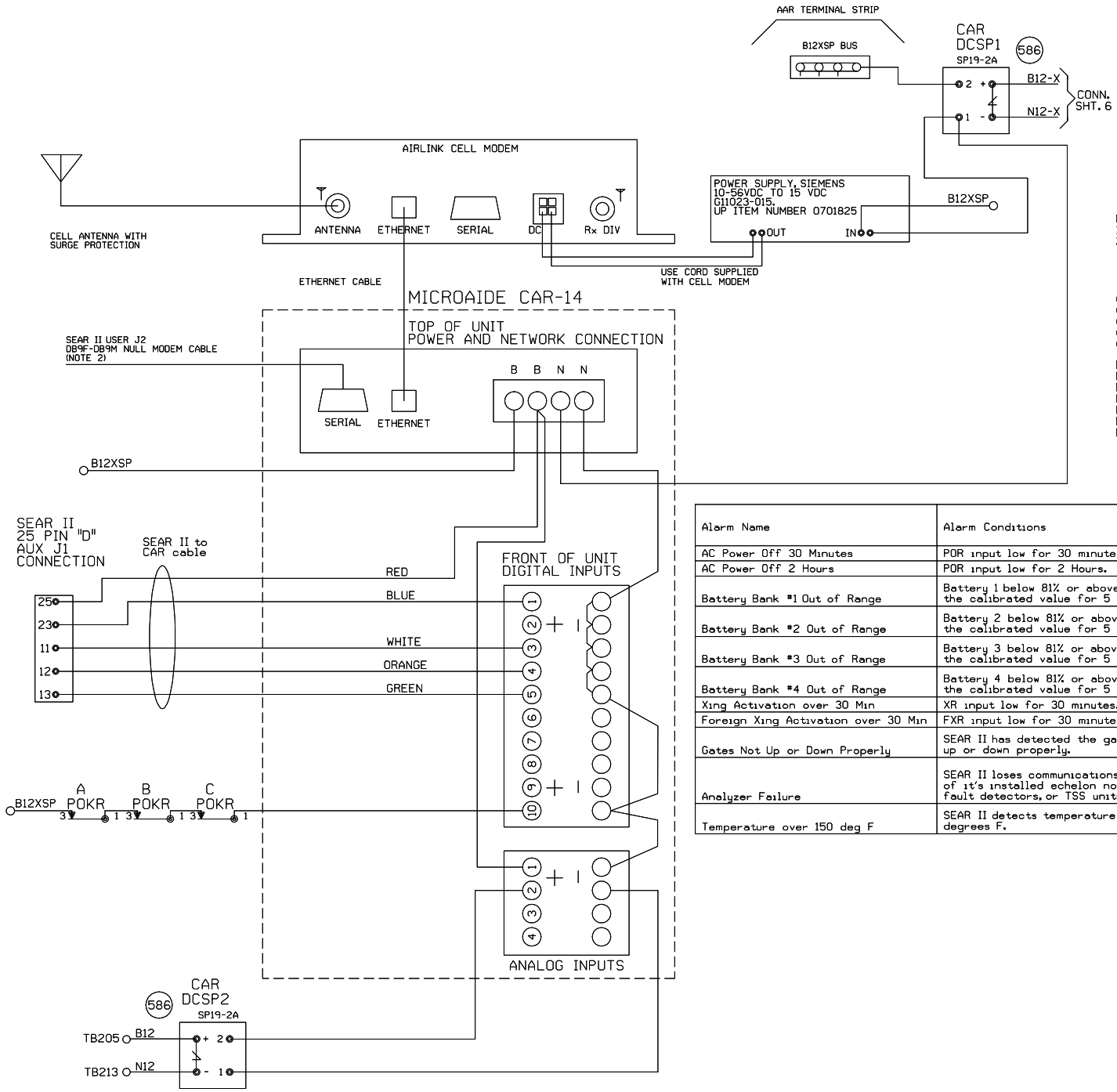


NOTE:
1) DO NOT JUMPER UNUSED INPUTS
2) THE CAR14 SERIAL PORT IS AVAILABLE TO ADD REMOTE CONNECTIVITY TO EXISTING LOGGING EQUIPMENT. USE NULL MODEM CABLE WITH SHIELDING DISCONNECTED AT ONE OR BOTH SIDES.

ANALOG INPUTS:
A1) B12X BATTERY BANK
A2) B12 BATTERY BANK
A3) BATTERY BANK 3
A4) BATTERY BANK 4

DIGITAL INPUTS
D1) XR (BLUE WIRE)
D2) FOREIGN XR
D3) ANALYZER FAILURE (WHITE WIRE)
D4) HIGH TEMPERATURE (ORANGE WIRE)
D5) GATES NOT UP OR DOWN PROPERLY (GREEN WIRE)
D10) POWER OFF INDICATION

| Alarm Name | Alarm Conditions | Alarm Clearing Conditions | Cleared by Maintainer Mode? |
|---|---|---|---|
| AC Power Off 30 Minutes | POR input low for 30 minutes. | POR input high for 5 minutes. | No |
| AC Power Off 2 Hours | POR input low for 2 Hours. | POR input high for 5 minutes. | No |
| Battery Bank #1 Out of Range | Battery 1 below 81% or above 120% of the calibrated value for 5 minutes. | Battery 1 within acceptable range for 5 minutes. | No |
| Battery Bank #2 Out of Range | Battery 2 below 81% or above 120% of the calibrated value for 5 minutes. | Battery 2 within acceptable range for 5 minutes. | No |
| Battery Bank #3 Out of Range | Battery 3 below 81% or above 120% of the calibrated value for 5 minutes. | Battery 3 within acceptable range for 5 minutes. | No |
| Battery Bank #4 Out of Range | Battery 4 below 81% or above 120% of the calibrated value for 5 minutes. | Battery 4 within acceptable range for 5 minutes. | No |
| Xing Activation over 30 Min | XR input low for 30 minutes. | XR input high for 10 seconds. | Yes |
| Foreign Xing Activation over 30 Min | FXR input low for 30 minutes. | FXR input high for 10 seconds. | Yes |
| Gates Not Up or Down Properly | SEAR II has detected the gates are not up or down properly. | SEAR II has detected the gates are up or down properly. | No |
| Analyzer Failure | SEAR II loses communications with any of it's installed echelon nodes, ground fault detectors, or TSS units. | SEAR II has recovered after an analyzer failure alarm. | No |
| Temperature over 150 deg F | SEAR II detects temperature over 150 degrees F. | SEAR II sensor detects temperature is OK after a High-Temp alarm. | No |

NEW SHEET

Designed: 03/08/13
NAGLE CORRIDOR PROJECT. REPLACE DC CIRCUITS W/ CWT FROM M.P. 9.68 TO M.P. 12.45
Rec#: 154 WO#: 11289 DLD/JPW / /PRS/JTB

| MODIFICATION LEVEL | |
|---|---|
| Q. A. LAST LEVEL CHECKED | DU |
| LAST LEVEL MOD THIS TYPICAL | DU |
| LAST LEVEL BY DESIGNER | DU |
| CHANGED FROM TYPICAL? | Y |

REV 01.24.11 4K ACDCCAR14SII.3

CIRCUIT MODIFICATIONS ARE NOT TO BE MADE WITHOUT AUTHORITY FROM THE OFFICE OF SIGNAL DESIGN

Date: 03/08/13
Des: PRS
Chk: DLD/JPW
AFE: 11289

**UNION PACIFIC RAILROAD**
CHICAGO, ILLINOIS
OZARK AVENUE
HARVARD SUBDIVISION
Office of Sr AVP Engineering - Signal/TCO Omaha, Nebraska

Sh.: 2A
DOT 173898U
MP: 12.45
ID: HAR1245.2AX

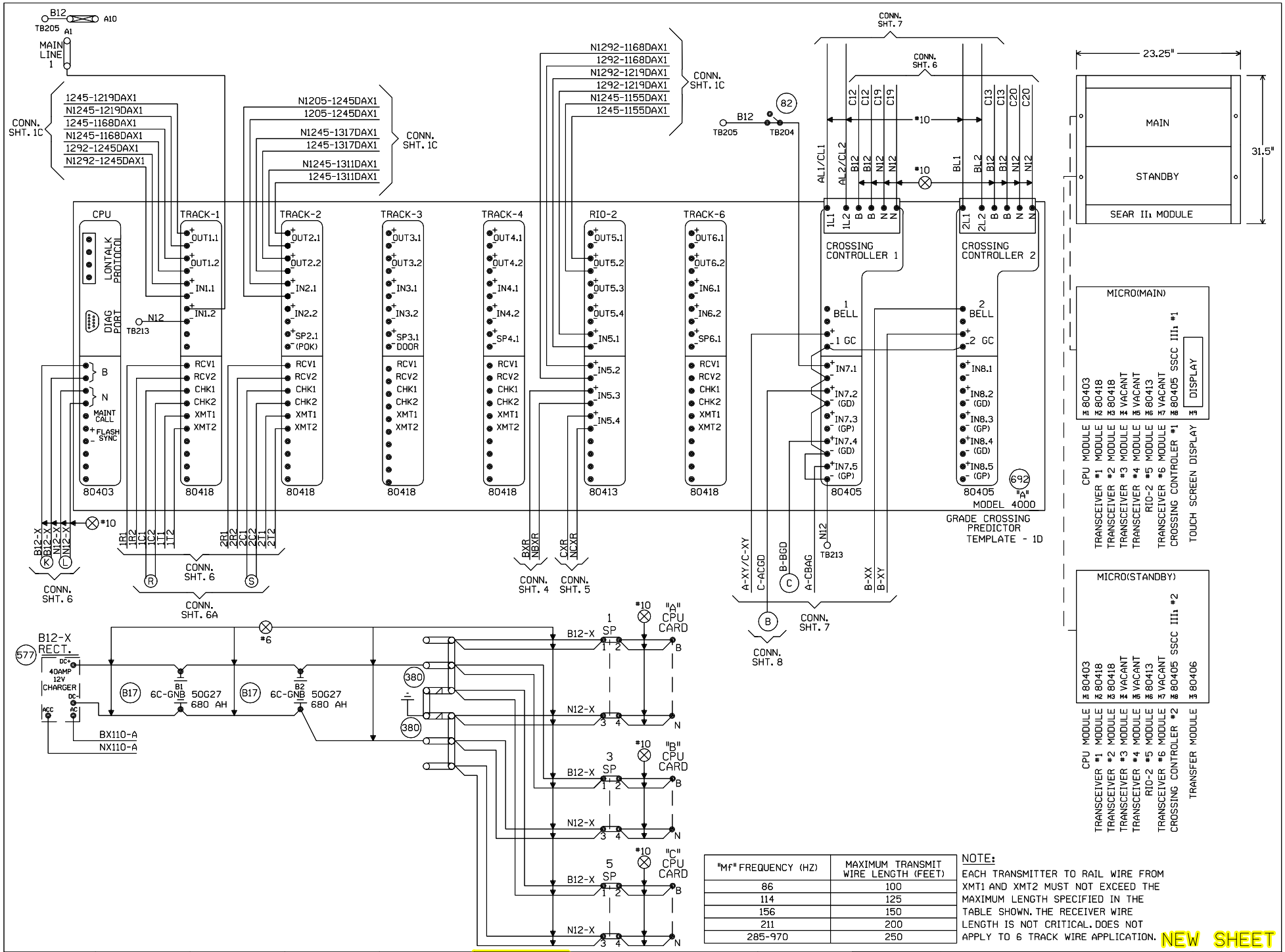


| "Mf" FREQUENCY (HZ) | MAXIMUM TRANSMIT WIRE LENGTH (FEET) |
|---|---|
| 86 | 100 |
| 114 | 125 |
| 156 | 150 |
| 211 | 200 |
| 285-970 | 250 |

NOTE:
EACH TRANSMITTER TO RAIL WIRE FROM XMT1 AND XMT2 MUST NOT EXCEED THE MAXIMUM LENGTH SPECIFIED IN THE TABLE SHOWN. THE RECEIVER WIRE LENGTH IS NOT CRITICAL. DOES NOT APPLY TO 6 TRACK WIRE APPLICATION.

NEW SHEET

Designed: 03/08/13
NAGLE CORRIDOR PROJECT. REPLACE DC CIRCUITS W/ CWT FROM M.P. 9.68 TO M.P. 12.45
Rec#: WO#: 11289
IS: DLD/JPW
/ /PRS/JTB

| MODIFICATION LEVEL | |
|---|---|
| Q. A. LAST LEVEL CHECKED | DU |
| LAST LEVEL MOD THIS TYPICAL | DU |
| LAST LEVEL BY DESIGNER | DU |
| CHANGED FROM TYPICAL? | Y |

REV 01.24.11 4K 4TKB4GF.3

CIRCUIT MODIFICATIONS ARE NOT TO BE MADE WITHOUT AUTHORITY FROM THE OFFICE OF SIGNAL DESIGN

Date: 03/08/13
Des: PRS
Chk: DLD/JPW
AFE: 11289

# UNION PACIFIC RAILROAD

CHICAGO, ILLINOIS
OZARK AVENUE
HARVARD SUBDIVISION

Office of Sr AVP Engineering - Signal/TCO Omaha, Nebraska

Sh.: 3
DOT 173898U
MP: 12.45
ID: HAR1245.3X

## Minimum Program Steps Report

### Location and SIN

DOT Number: 173898U
Milepost Number: M.P.12.45
Site Name: CHICAGO, ILLINOIS

SIN: 762010010016 *

* Parameter is part of office check number calculation.

### MCF and Template Selection

MCF Name: GCP-T6X-02-4.mcf
MCF Revision: 24
MCFCRC: 09FC363B

Template = 1D:3 Uni pairs (OCCN) *

* Parameter is part of office check number calculation.

### Minimum Program Steps

TEMPLATE: module configuration
Track 5/RIO 2 Slot = RIO (OCCN) *

TEMPLATE: track 1-Uni, Island
Track 1 : GCP Frequency = 347 Hz (Field,TCN)
Track 1 : Approach Distance = 2131 ft (Set in Field,TCN)
Track 1 : Prime Warning Time = 27 sec (OCCN) *
Track 1 : Prime UAX = IP (OCCN) *
Track 1 : Prime UAX Pickup = 15 sec (OCCN) *
Track 1 : GCP Transmit Level = Medium (Set in Field,TCN)
Track 1 : Uni/Bi/Sim-Bidirnl = Sim. Bidirnl (OCCN) *
Track 1 : Isl Frequency = 11.5 kHz (Set in Field)
Track 1 : Island Distance = 148 ft (Set in Field,TCN)

TEMPLATE: track 1 Daxes
Track 1 : Dax A Used = Yes (OCCN) *
Track 1 : Dax A Warning Time = 28 sec (OCCN) *
Track 1 : Dax A Offset Distance = 1393 ft (Set in Field)
Track 1 : Dax B Used = Yes (OCCN) *
Track 1 : Dax B Warning Time = 54 sec (OCCN) *
Track 1 : Dax B Offset Distance = 4145 ft (Set in Field)
Track 1 : Dax C Used = Yes (OCCN) *
Track 1 : Dax C Warning Time = 55 sec (OCCN) *
Track 1 : Dax C Offset Distance = 4883 ft (Set in Field)

TEMPLATE: track 2-Uni,No Island
Track 2 : GCP Frequency = 284 Hz (Field,TCN)
Track 2 : Approach Distance = 2106 ft (Set in Field,TCN)
Track 2 : Prime Warning Time = 27 sec (OCCN) *
Track 2 : Prime UAX = IP (OCCN) *
Track 2 : Prime UAX Pickup = 15 sec (OCCN) *
Track 2 : GCP Transmit Level = Medium (Set in Field,TCN)
Track 2 : Uni/Bi/Sim-Bidirnl = Sim. Bidirnl (OCCN) *

TEMPLATE: track 2 Daxes
Track 2 : Dax A Used = Yes (OCCN) *
Track 2 : Dax A Warning Time = 31 sec (OCCN) *
Track 2 : Dax A Offset Distance = 3271 ft (Set in Field)
Track 2 : Dax B Used = Yes (OCCN) *
Track 2 : Dax B Warning Time = 29 sec (OCCN) *
Track 2 : Dax B Offset Distance = 3639 ft (Set in Field)

TEMPLATE: track Anding
AND 2 Used = Yes (OCCN) *
AND 3 Used = Yes (OCCN) *

TEMPLATE: AND 1 XR
AND 1 Enable Used = Yes (OCCN) *

TEMPLATE: AND 2
AND 2 Track 1 = Dax A (OCCN) *
AND 2 Enable Used = Yes (OCCN) *

TEMPLATE: AND 3
AND 3 Track 1 = Dax B (OCCN) *
AND 3 Enable Used = Yes (OCCN) *

TEMPLATE: SSCC
SSCC 1 : Lamp Neutral Test = Off (Set in Field)
SSCC 2 : Lamp Neutral Test = Off (Set in Field)

TEMPLATE: OOS
OOS Control = OOS IPs (OCCN) *
T2 OOS Control = OOS Input 1 (OCCN) *

TEMPLATE: OP assignment 1
OUT 1.1 = AND 2 (OCCN) *
OUT 1.2 = AND 3 (OCCN) *
OUT 2.1 = T2 Dax A (OCCN) *
OUT 2.2 = T2 Dax B (OCCN) *

TEMPLATE: OP assignment 2
OUT 5.2 = T1 Dax C (OCCN) *

TEMPLATE: IP assignment 1
IN 1.1 = T1 Prime UAX (OCCN) *
IN 1.2 = Out Of Service IP 1 (OCCN) *
IN 2.1 = T2 Prime UAX (OCCN) *

TEMPLATE: IP assignment 2
IN 5.1 = AND 2 Enable (OCCN) *
IN 5.2 = AND 3 Enable (OCCN) *
IN 5.3 = AND 1 XR Enable (OCCN) *
IN 5.4 = AND 1 XR Enable (OCCN) *

TEMPLATE: IP assignment SSCC
IN 7.1 = AND 1 XR Enable (OCCN) *

GCP: track 1
Track 1 : GCP Freq Category = Offset (Set in Field)

GCP: track 2
Track 2 : GCP Freq Category = Offset (Set in Field)

ADVANCED: site options
Daylight Savings = On (Set in Field)

* Parameter is part of office check number calculation.

### Check Numbers

Office Check Number: 32B7B109
Config. Check Number: 71D7A8FA
(Based on MCF Revision 24)

Parameters not part of office check number calculation:

Track 1 : GCP Frequency = 347 Hz
Track 1 : Approach Distance = 2131 ft (Set in Field)
Track 1 : GCP Transmit Level = Medium (Set in Field)
Track 1 : Isl Frequency = 11.5 kHz
Track 1 : Island Distance = 148 ft (Set in Field)
Track 1 : Dax A Offset Distance = 1393 ft (Set in Field)
Track 1 : Dax B Offset Distance = 4145 ft (Set in Field)
Track 1 : Dax C Offset Distance = 4883 ft (Set in Field)
Track 2 : GCP Frequency = 284 Hz
Track 2 : Approach Distance = 2106 ft (Set in Field)
Track 2 : GCP Transmit Level = Medium (Set in Field)
Track 2 : Dax A Offset Distance = 3271 ft (Set in Field)
Track 2 : Dax B Offset Distance = 3639 ft (Set in Field)
SSCC 1 : Lamp Neutral Test = Off (Set in Field)
SSCC 2 : Lamp Neutral Test = Off (Set in Field)
Track 1 : GCP Freq Category = Offset (Set in Field)
Track 2 : GCP Freq Category = Offset (Set in Field)
Daylight Savings = On (Set in Field)

### Comments

<none>

### Configuration Package File

Filename: HAR1245_173898U_A.pac
Path: H:\01-Xing\up110143\GCP Programs\M.P. 12.45\
Date/Time: 10/26/2012 19:00:07

NEW SHEET

Designed: 03/08/13
NAGLE CORRIDOR PROJECT. REPLACE DC CIRCUITS W/ CWT FROM M.P. 9.68 TO M.P. 12.45
Rec*: WO#: 11289
IS: DLD/JPW
/ /PRS/JTB

NOTE: Actual OFFSET and ISLAND distances must be verified by field personnel.

CIRCUIT MODIFICATIONS ARE NOT TO BE MADE WITHOUT AUTHORITY FROM THE OFFICE OF SIGNAL DESIGN

| | |
|---|---|
| Date: | 03/08/13 |
| Des: | PRS |
| Chk: | DLD/JPW |
| AFE: | 11289 |

UNION PACIFIC RAILROAD
CHICAGO, ILLINOIS
OZARK AVENUE
HARVARD SUBDIVISION
Office of Sr AVP Engineering - Signal/TCO Omaha, Nebraska

| | |
|---|---|
| Sh.: | 3A |
| DOT | 173898U |
| MP: | 12.45 |
| ID: | HAR1245.3AX |