Minimum Program Steps Report

Location and SIN

DOT Number: 173894S
Milepost Number: M.P. 11.68
Site Name: CHICAGO, ILLINOIS

SIN: 762010010016 *

* Parameter is part of office check number calculation.

MCF and Template Selection

MCF Name: GCP-T6X-02-4.mcf
MCF Revision: 24
MCFCRC: 09FC363B

Template = 1A:6 Trk Bi (OCCN) *

* Parameter is part of office check number calculation.

Minimum Program Steps

TEMPLATE: module configuration
Track 2/RIO 1 Slot = RIO (OCCN) *
Track 5/RIO 2 Slot = RIO (OCCN) *

TEMPLATE: preemption
Preempt Logic = Simult (OCCN) *

TEMPLATE: track 1-Bi, Island
Track 1 : GCP Frequency = 643 Hz (Field,TCN)
Track 1 : Approach Distance = 1891 ft (Set in Field,TCN)
Track 1 : Prime Warning Time = 53 sec (OCCN) *
Track 1 : Prime UAX = IP (OCCN) *
Track 1 : Prime UAX Pickup = 15 sec (OCCN) *
Track 1 : GCP Transmit Level = Medium (Set in Field,TCN)
Track 1 : Isl Frequency = 4.0 kHz (Set in Field)

TEMPLATE: AND 1 XR
AND 1 Enable Used = Yes (OCCN) *

TEMPLATE: SSCC
SSCC 1 : Lamp Neutral Test = Off (Set in Field)
SSCC 2 : Lamp Neutral Test = Off (Set in Field)

TEMPLATE: OOS
OOS Control = OOS IPs (OCCN) *

TEMPLATE: OP assignment 1
OUT 1.2 = Sim Preempt (OCCN) *

TEMPLATE: IP assignment 1
IN 1.1 = Preempt Health (OCCN) *
IN 1.2 = Out Of Service IP 1 (OCCN) *
IN 2.1 = T1 Prime UAX (OCCN) *
IN 2.2 = T1 Prime UAX (OCCN) *
IN 2.3 = AND 1 XR Enable (OCCN) *
IN 2.4 = AND 1 XR Enable (OCCN) *

TEMPLATE: IP assignment 2
IN 5.1 = AND 1 XR Enable (OCCN) *

TEMPLATE: IP assignment SSCC
IN 7.1 = AND 1 XR Enable (OCCN) *

GCP: track 1
Track 1 : GCP Freq Category = Offset (Set in Field)
Track 1 : Island Distance = 202 ft (Set in Field,TCN)

ADVANCED: site options
Daylight Savings = On (Set in Field)

* Parameter is part of office check number calculation.

Check Numbers

Office Check Number: 3FB9B00E
Config. Check Number: 6AAD0E57
(Based on MCF Revision 24)

Parameters not part of office check number calculation:

Track 1 : GCP Frequency = 643 Hz
Track 1 : Approach Distance = 1891 ft (Set in Field)
Track 1 : GCP Transmit Level = Medium (Set in Field)
Track 1 : Isl Frequency = 4.0 kHz
SSCC 1 : Lamp Neutral Test = Off (Set in Field)
SSCC 2 : Lamp Neutral Test = Off (Set in Field)
Track 1 : GCP Freq Category = Offset (Set in Field)
Track 1 : Island Distance = 202 ft (Set in Field)
Daylight Savings = On (Set in Field)

Comments

<none>

Configuration Package File

Filename: HAR1168_173894S_A.pac
Path: H:\01-Xing\up130034TM-NagleChanges\GCP Programs\M.P.11.68\
Date/Time: 3/21/2013 16:25:03

NEW SHEET

Designed: 03/08/13
NAGLE CORRIDOR PROJECT. REPLACE DC CIRCUITS W/ CWT FROM M.P. 9.68 TO M.P. 12.45
Rec*: WO#: 11289
IS: DLD/JPW
/ /PRS/JTB

NOTE: Actual OFFSET and ISLAND distances must be verified by field personnel.

CIRCUIT MODIFICATIONS ARE NOT TO BE MADE WITHOUT AUTHORITY FROM THE OFFICE OF SIGNAL DESIGN

Date:	03/08/13
Des:	PRS
Chk:	DLD/JPW
AFE:	11289

UNION PACIFIC RAILROAD
CHICAGO, ILLINOIS
DEVON AVENUE/ CH135
HARVARD SUBDIVISION
Office of Sr AVP Engineering - Signal/TCO Omaha, Nebraska

Sh.:	3A
DOT	173894S
MP:	11.68
ID:	HAR1168.3AX

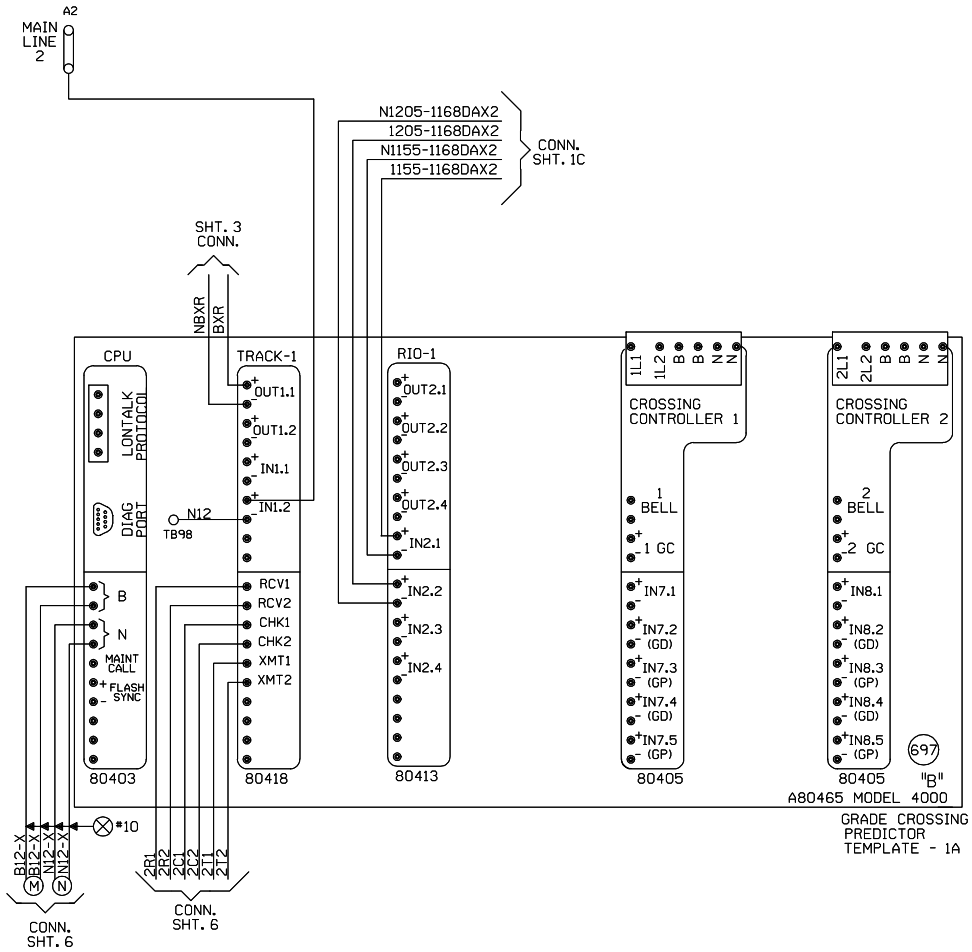

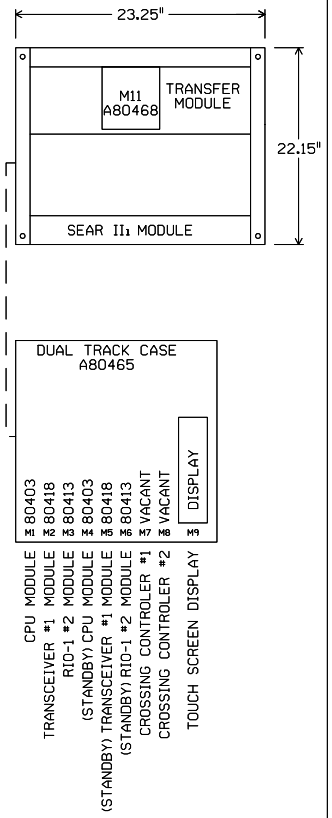

"Mf" FREQUENCY (HZ)	MAXIMUM TRANSMIT WIRE LENGTH (FEET)
86	100
114	125
156	150
211	200
285-970	250

NOTE:
EACH TRANSMITTER TO RAIL WIRE FROM XMT1 AND XMT2 MUST NOT EXCEED THE MAXIMUM LENGTH SPECIFIED IN THE TABLE SHOWN. THE RECEIVER WIRE LENGTH IS NOT CRITICAL. DOES NOT APPLY TO 6 TRACK WIRE APPLICATION.

NEW SHEET

Designed: 03/08/13
NAGLE CORRIDOR PROJECT. REPLACE DC CIRCUITS W/ CWT FROM M.P. 9.68 TO M.P. 12.45
Rec#: 151 WO#: 11289 DLD/JPW / /PRS/JTB

MODIFICATION LEVEL	
Q. A. LAST LEVEL CHECKED	DU
LAST LEVEL MOD THIS TYPICAL	DU
LAST LEVEL BY DESIGNER	DU
CHANGED FROM TYPICAL?	Y

REV 01.24.11 4K 2TKGF.3

CIRCUIT MODIFICATIONS ARE NOT TO BE MADE WITHOUT AUTHORITY FROM THE OFFICE OF SIGNAL DESIGN

Date: 03/08/13
Des: PRS
Chk: DLD/JPW
AFE: 11289

UNION PACIFIC RAILROAD
CHICAGO, ILLINOIS
DEVON AVENUE/ CH135
HARVARD SUBDIVISION
Office of Sr AVP Engineering - Signal/TCO Omaha, Nebraska

Sh.: 4
DOT 173894S
MP: 11.68
ID: HAR1168.4X

Minimum Program Steps Report

Location and SIN

DOT Number: 173894S
Milepost Number: 11.68
Site Name: CHICAGO, ILLINOIS

SIN: 762010010016 *

* Parameter is part of office check number calculation.

MCF and Template Selection

MCF Name: GCP-T6X-02-4.mcf
MCF Revision: 24
MCFCRC: 09FC363B

Template = 1A:6 Trk Bi (OCCN) *

* Parameter is part of office check number calculation.

Minimum Program Steps

TEMPLATE: module configuration
Track 2/RIO 1 Slot = RIO (OCCN) *
SSCC 1 Slot = Not Used (OCCN) *
SSCC 2 Slot = Not Used (OCCN) *

TEMPLATE: track 1-Bi, Island
Track 1 : GCP Frequency = 645 Hz (Field,TCN)
Track 1 : Approach Distance = 1891 ft (Set in Field,TCN)
Track 1 : Prime Warning Time = 53 sec (OCCN) *
Track 1 : Prime UAX = IP (OCCN) *
Track 1 : Prime UAX Pickup = 15 sec (OCCN) *
Track 1 : GCP Transmit Level = Medium (Set in Field,TCN)
Track 1 : Isl Frequency = 4.9 kHz (Set in Field)

TEMPLATE: OOS
OOS Control = OOS IPs (OCCN) *

TEMPLATE: OP assignment 1
OUT 1.1 = AND 1 XR (OCCN) *

TEMPLATE: IP assignment 1
IN 1.2 = Out Of Service IP 1 (OCCN) *
IN 2.1 = T1 Prime UAX (OCCN) *
IN 2.2 = T1 Prime UAX (OCCN) *

GCP: track 1
Track 1 : Island Distance = 202 ft (Set in Field,TCN)

ADVANCED: site options
Daylight Savings = On (Set in Field)

* Parameter is part of office check number calculation.

Check Numbers

Office Check Number: 5331ACC2
Config. Check Number: 5F72709C
(Based on MCF Revision 24)

Parameters not part of office check number calculation:

Track 1 : GCP Frequency = 645 Hz
Track 1 : Approach Distance = 1891 ft (Set in Field)
Track 1 : GCP Transmit Level = Medium (Set in Field)
Track 1 : Isl Frequency = 4.9 kHz
Track 1 : Island Distance = 202 ft (Set in Field)
Daylight Savings = On (Set in Field)

Comments

<none>

Configuration Package File

Filename: HAR1168_173894S_B.pac
Path: H:\01-Xing\up110143\GCP Programs\M.P. 11.68\
Date/Time: 10/26/2012 19:11:25

NEW SHEET

Designed: 03/08/13
NAGLE CORRIDOR PROJECT. REPLACE DC CIRCUITS W/ CWT FROM M.P. 9.68 TO M.P. 12.45
Rec*: WO#: 11289
IS: DLD/JPW
/ /PRS/JTB

NOTE: Actual OFFSET and ISLAND distances must be verified by field personnel.

CIRCUIT MODIFICATIONS ARE NOT TO BE MADE WITHOUT AUTHORITY FROM THE OFFICE OF SIGNAL DESIGN

Date:	03/08/13
Des:	PRS
Chk:	DLD/JPW
AFE:	11289

UNION PACIFIC RAILROAD
CHICAGO, ILLINOIS
DEVON AVENUE/ CH135
HARVARD SUBDIVISION
Office of Sr AVP Engineering - Signal/TCO Omaha, Nebraska

Sh.:	4A
DOT	173894S
MP:	11.68
ID:	HAR1168.4AX

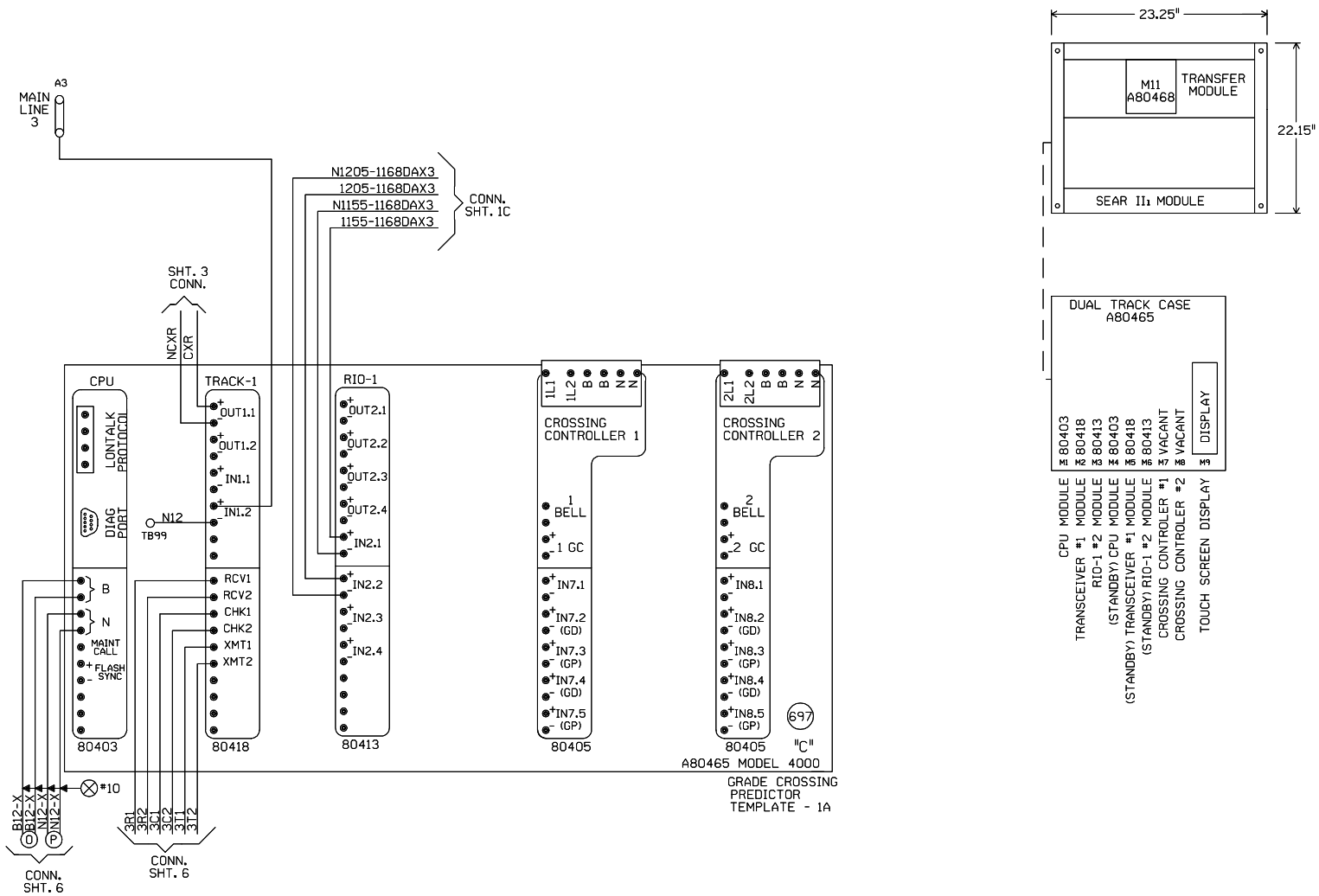

"Mf" FREQUENCY (HZ)	MAXIMUM TRANSMIT WIRE LENGTH (FEET)
86	100
114	125
156	150
211	200
285-970	250

NOTE:
EACH TRANSMITTER TO RAIL WIRE FROM XMT1 AND XMT2 MUST NOT EXCEED THE MAXIMUM LENGTH SPECIFIED IN THE TABLE SHOWN. THE RECEIVER WIRE LENGTH IS NOT CRITICAL. DOES NOT APPLY TO 6 TRACK WIRE APPLICATION.

NEW SHEET

Designed: 03/08/13
NAGLE CORRIDOR PROJECT. REPLACE DC CIRCUITS W/ CWT FROM M.P. 9.68 TO M.P. 12.45
Rec#: WO#: 11289
IS: DLD/JPW
/ /PRS/JTB

MODIFICATION LEVEL	
Q.A. LAST LEVEL CHECKED	DU
LAST LEVEL MOD THIS TYPICAL	DU
LAST LEVEL BY DESIGNER	DU
CHANGED FROM TYPICAL?	Y

REV 01.24.11 4K 2TKGF.3

CIRCUIT MODIFICATIONS ARE NOT TO BE MADE WITHOUT AUTHORITY FROM THE OFFICE OF SIGNAL DESIGN

Date: 03/08/13
Des: PRS
Chk: DLD/JPW
AFE: 11289

UNION PACIFIC RAILROAD
CHICAGO, ILLINOIS
DEVON AVENUE/ CH135
HARVARD SUBDIVISION
Office of Sr AVP Engineering - Signal/TCO Omaha, Nebraska

Sh.: 5
DOT 173894S
MP: 11.68
ID: HAR1168.5X