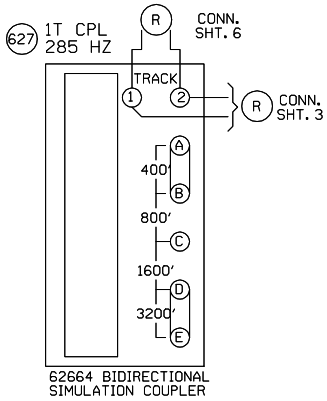

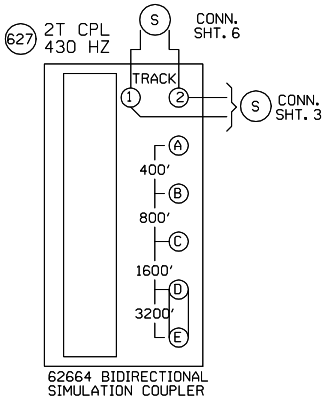

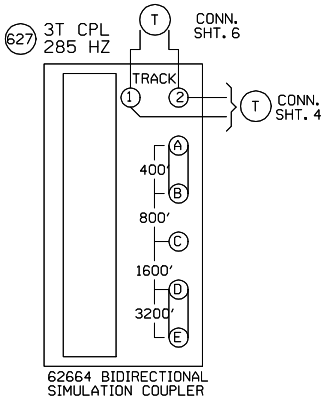

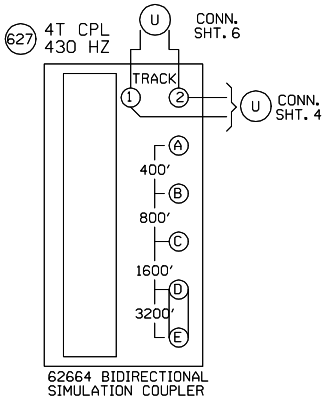

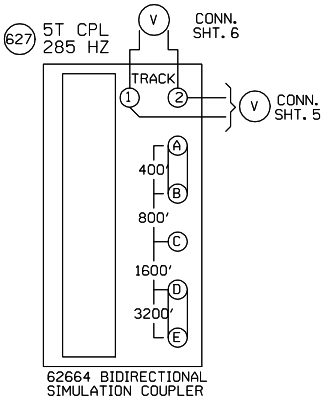

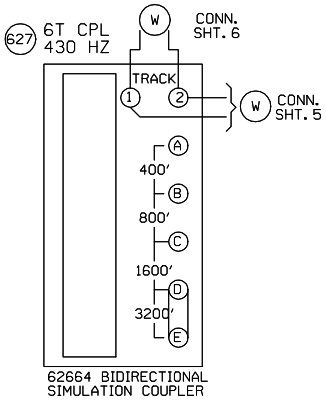

NEW SHEET

					Designed: 03/08/13 NAGLE CORRIDOR PROJECT. REPLACE DC CIRCUITS W/ CWT FROM M.P. 9.68 TO M.P. 12.45 Rec#: WO#: 11289 ISs: DLD/JPW / /PRS/JTB	MODIFICATION LEVEL		CIRCUIT MODIFICATIONS ARE NOT TO BE MADE WITHOUT AUTHORITY FROM THE OFFICE OF SIGNAL DESIGN	Date: 03/08/13	UNION PACIFIC RAILROAD	Sh.: 6A
						O. A. LAST LEVEL CHECKED	DU		Des: PRS	CHICAGO, ILLINOIS HARLEM AVENUE/ILL43 HARVARD SUBDIVISION	DOT 173893K
						LAST LEVEL MOD THIS TYPICAL	DU		Chk: DLD/JPW		MP: 11.55
						LAST LEVEL BY DESIGNER	DU		AFE: 11289		ID: HAR1155.6AX
						CHANGED FROM TYPICAL?	Y			Office of Sr AVP Engineering - Signal/TCO Omaha, Nebraska	
						REV 01.24.11 4K 4TKSPGFC.4					

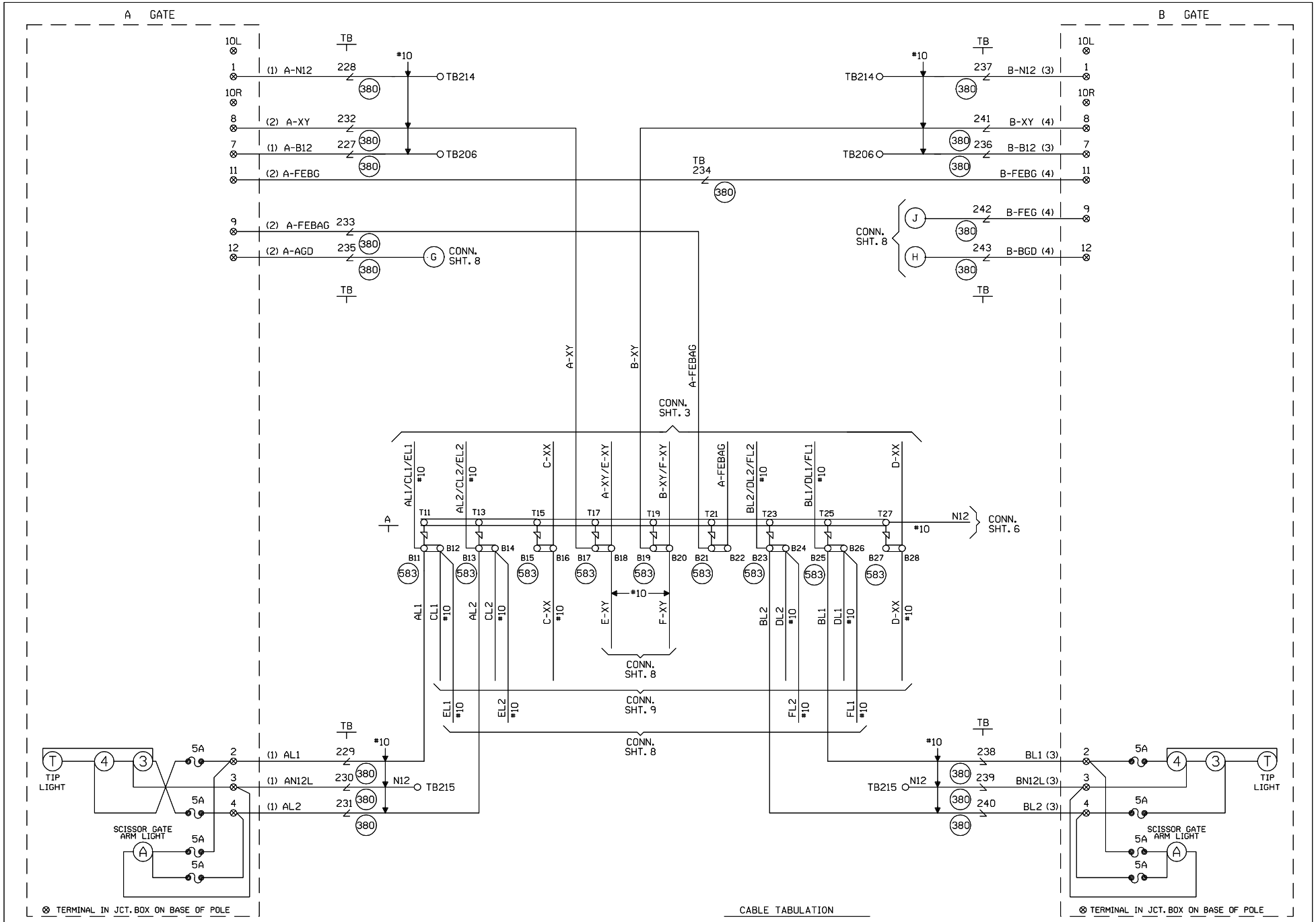

CABLE TABULATION

CABLE NO. 1 5C. NO.6 U.G.B.T. TO GATE A
CABLE NO. 2 7C. NO.14 U.G.B.T. TO GATE A
CABLE NO. 3 5C. NO.6 U.G.B.T. TO GATE B
CABLE NO. 4 7C. NO.14 U.G.B.T. TO GATE B

NEW SHEET

Designed: 03/08/13
NAGLE CORRIDOR PROJECT. REPLACE DC CIRCUITS W/ CWT FROM M.P. 9.68 TO M.P. 12.45
Rec#: WO#: 11289
IS: DLD/JPW / /PRS/JTB

MODIFICATION LEVEL	
Q. A. LAST LEVEL CHECKED	DU
LAST LEVEL MOD THIS TYPICAL	DU
LAST LEVEL BY DESIGNER	DU
CHANGED FROM TYPICAL?	Y

REV 01.24.11 4K 4GFTYP.5

CIRCUIT MODIFICATIONS ARE NOT TO BE MADE WITHOUT AUTHORITY FROM THE OFFICE OF SIGNAL DESIGN

Date: 03/08/13
Des: PRS
Chk: DLD/JPW
AFE: 11289

UNION PACIFIC RAILROAD

CHICAGO, ILLINOIS
HARLEM AVENUE/ILL43
HARVARD SUBDIVISION

Office of Sr AVP Engineering - Signal/TCO Omaha, Nebraska

Sh.: 7
DOT 173893K
MP: 11.55
ID: HAR1155.7X

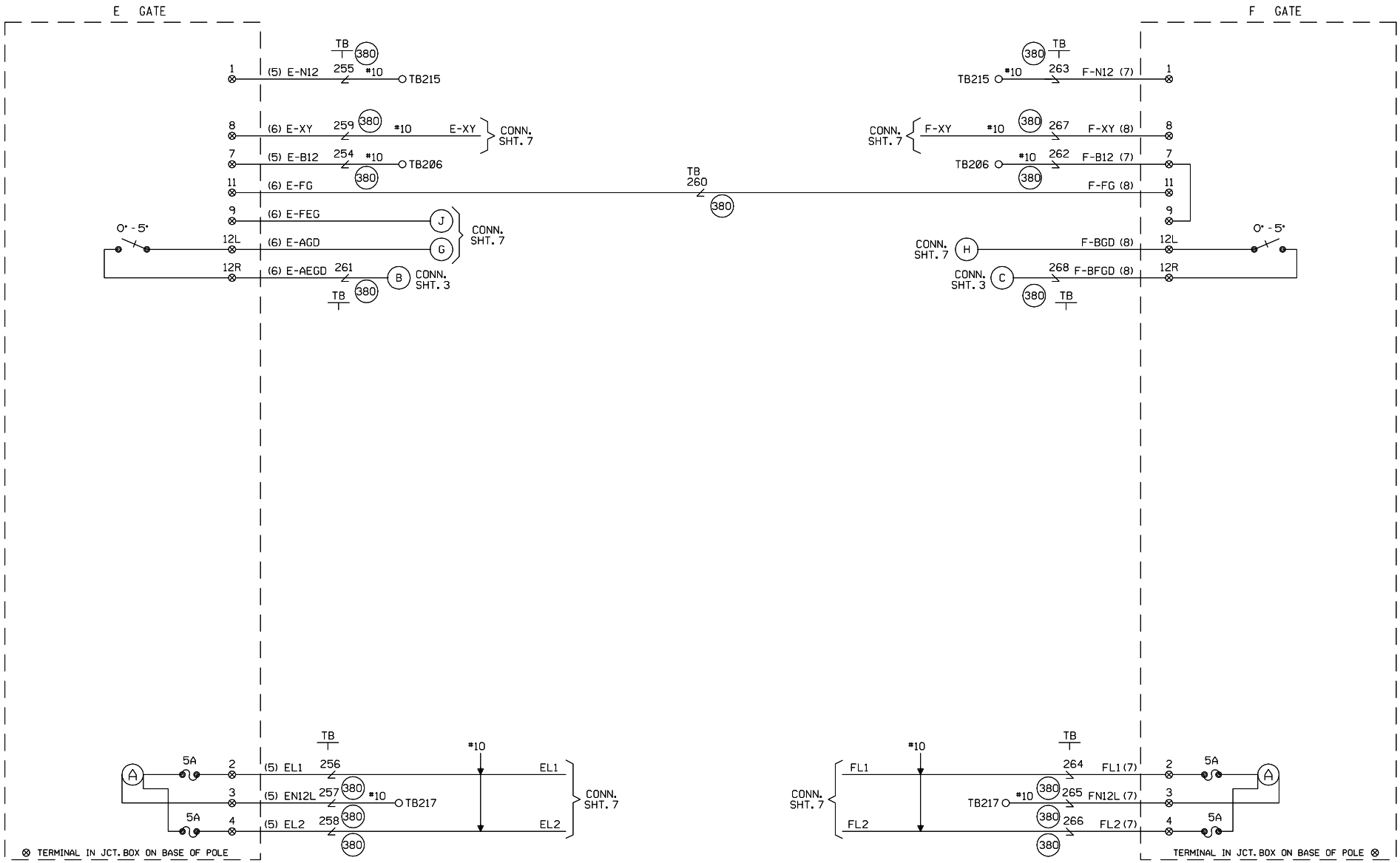

CABLE TABULATION

CABLE NO. 5 5C. NO.6 U.G.B.T. TO GATE E
CABLE NO. 6 7C. NO.14 U.G.B.T. TO GATE E
CABLE NO. 7 5C. NO.6 U.G.B.T. TO GATE F
CABLE NO. 8 7C. NO.14 U.G.B.T. TO GATE F

NEW SHEET

Designed: 03/08/13
NAGLE CORRIDOR PROJECT. REPLACE DC CIRCUITS W/ CWT FROM M.P. 9.68 TO M.P. 12.45
Rec#: WO#: 11289
IS: DLD/JPW /PRS/JTB

MODIFICATION LEVEL	
Q. A. LAST LEVEL CHECKED	DU
LAST LEVEL MOD THIS TYPICAL	DU
LAST LEVEL BY DESIGNER	DU
CHANGED FROM TYPICAL?	Y

REV 01.24.11 4K 4GFTYP.6

CIRCUIT MODIFICATIONS ARE NOT TO BE MADE WITHOUT AUTHORITY FROM THE OFFICE OF SIGNAL DESIGN

Date: 03/08/13
Des: PRS
Chk: DLD/JPW
AFE: 11289

UNION PACIFIC RAILROAD
CHICAGO, ILLINOIS
HARLEM AVENUE/ILL43
HARVARD SUBDIVISION
Office of Sr AVP Engineering - Signal/TCO Omaha, Nebraska

Sh.: 8
DOT 173893K
MP: 11.55
ID: HAR1155.8X

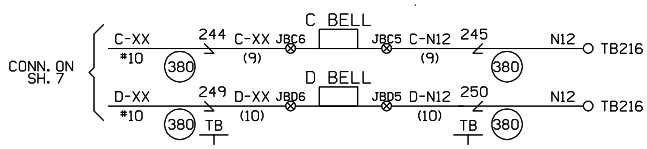

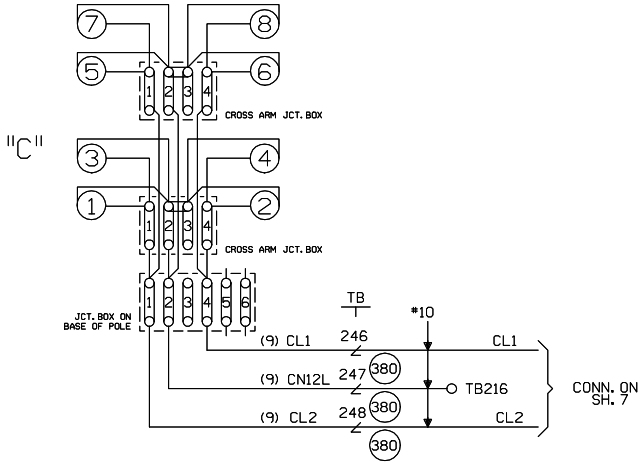

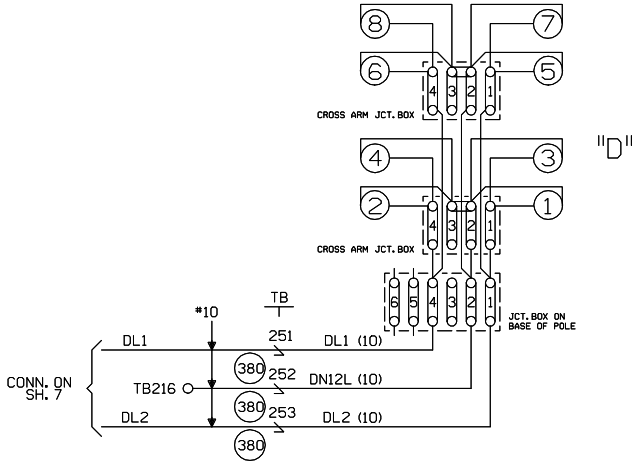

CABLE TABULATION

CABLE NO. 9 5C. NO. 6 U.G.B.T. TO CANT C
CABLE NO. 10 5C. NO. 6 U.G.B.T. TO CANT D

NEW SHEET

Designed: 03/08/13
NAGLE CORRIDOR PROJECT. REPLACE DC CIRCUITS W/ CWT FROM M.P. 9.68 TO M.P. 12.45
Rec#: WO#: 11289
IS: DLD/JPW / /PRS/JTB

MODIFICATION LEVEL	
O. A. LAST LEVEL CHECKED	DU
LAST LEVEL MOD THIS TYPICAL	DU
LAST LEVEL BY DESIGNER	DU
CHANGED FROM TYPICAL?	Y

REV 01.24.11 4K CGTYP.6

CIRCUIT MODIFICATIONS ARE NOT TO BE MADE WITHOUT AUTHORITY FROM THE OFFICE OF SIGNAL DESIGN

Date: 03/08/13
Des: PRS
Chk: DLD/JPW
AFE: 11289

UNION PACIFIC RAILROAD
CHICAGO, ILLINOIS
HARLEM AVENUE/ILL43
HARVARD SUBDIVISION
Office of Sr AVP Engineering - Signal/TCO Omaha, Nebraska

Sh.: 9
DOT 173893K
MP: 11.55
ID: HAR1155.9X

SAFETRAN PRODUCTS MODEL "S" MECHANISM

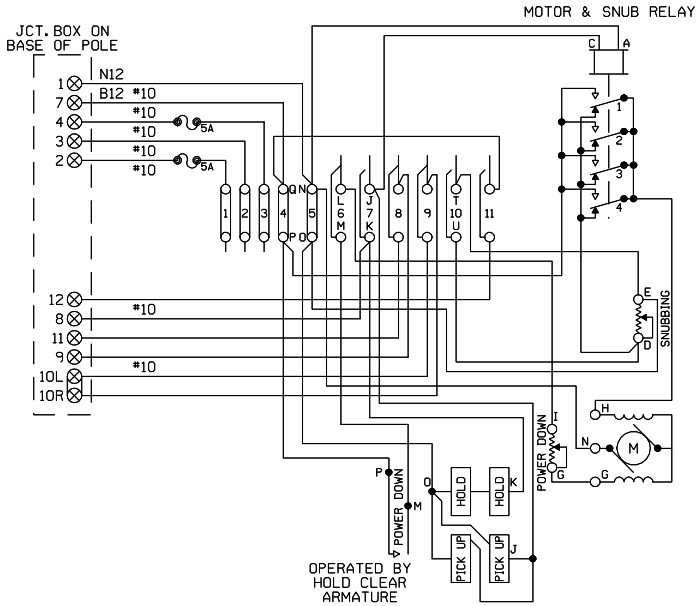

MECHANISM SHOWN IN CLEAR POSITION.

INSTALLED

CONT. SPACE NO.	CLEARING (UP)		RETURNING (DN.)		FUNCTION OF CONTACT
	CLOSES	OPENS	CLOSES	OPENS	
6	45°	—	—	45°	DOWN MOTOR CUTOUT
7	—	89°	89°	—	UP MOTOR CUTOUT
8	85°	—	—	85°	GATE NORMAL
9	3°	—	—	3°	BELL CONTROL
10	—	3°	3°	—	SNUBBING
11	—	5°	5°	—	GATE DOWN

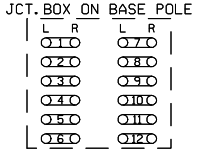

FIELD PLEASE
VERIFY GATE MECH.
WIRING AND AC
PLAN ACCORDINGLY.

FOR WIRING GATES "A" AND "B"

SAFETRAN PRODUCTS MODEL "S" MECHANISM

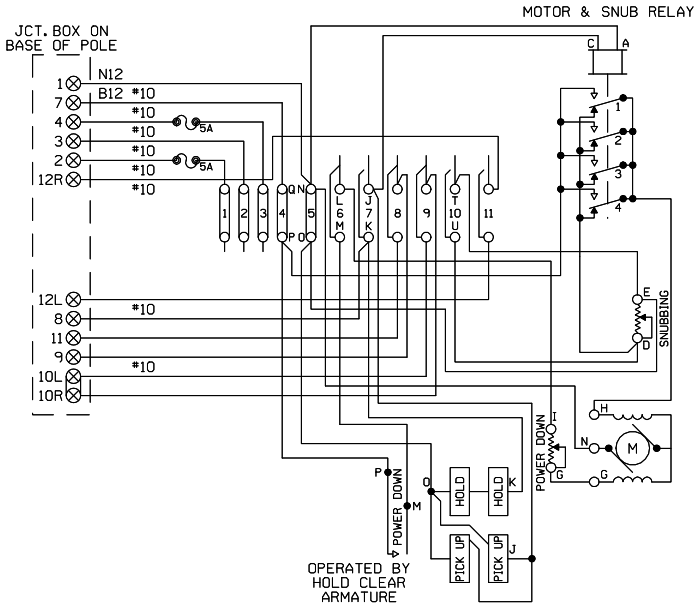

MECHANISM SHOWN IN CLEAR POSITION.

INSTALLED

CONT. SPACE NO.	CLEARING (UP)		RETURNING (DN.)		FUNCTION OF CONTACT
	CLOSES	OPENS	CLOSES	OPENS	
6	45°	—	—	45°	DOWN MOTOR CUTOUT
7	—	89°	89°	—	UP MOTOR CUTOUT
8	85°	—	—	85°	GATE NORMAL
9	3°	—	—	3°	BELL CONTROL
10	—	3°	3°	—	SNUBBING
11	—	5°	5°	—	GATE DOWN

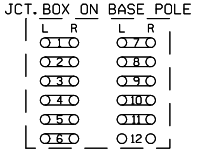

FIELD PLEASE
VERIFY GATE MECH.
WIRING AND AC
PLAN ACCORDINGLY.

FOR WIRING GATES "E" AND "F"

NEW SHEET

Designed: 03/08/13
NAGLE CORRIDOR PROJECT. REPLACE DC CIRCUITS W/ CWT FROM M.P. 9.68 TO M.P. 12.45
Rec#: WO#: 11289
ISS: DLD/JPW
/ /PRS/JTB

MODIFICATION LEVEL	
Q. A. LAST LEVEL CHECKED	DD
LAST LEVEL MOD THIS TYPICAL	DB
LAST LEVEL BY DESIGNER	DU
CHANGED FROM TYPICAL?	Y

REV 01.02.21 GWIRING.DGN

CIRCUIT MODIFICATIONS ARE NOT TO BE MADE WITHOUT AUTHORITY FROM THE OFFICE OF SIGNAL DESIGN

Date: 03/08/13
Des: PRS
Chk: DLD/JPW
AFE: 11289

UNION PACIFIC RAILROAD
CHICAGO, ILLINOIS
HARLEM AVENUE/ILL43
HARVARD SUBDIVISION
Office of Sr AVP Engineering - Signal/TCO Omaha, Nebraska

Sh.: 10
DOT 173893K
MP: 11.55
ID: HAR1155.10X

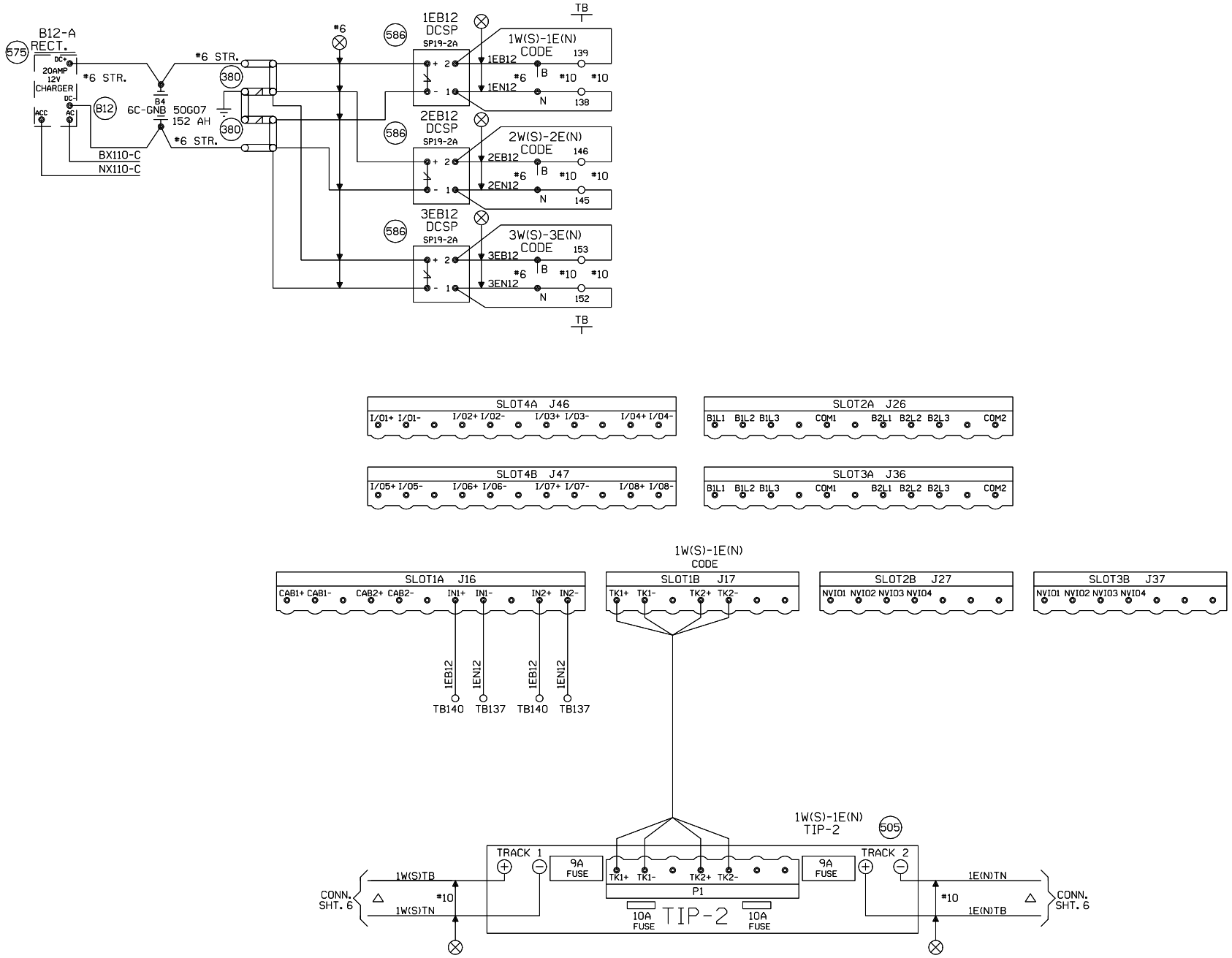

NEW SHEET

					Designed: 03/08/13 NAGLE CORRIDOR PROJECT. REPLACE DC CIRCUITS W/ CWT FROM M.P. 9.68 TO M.P. 12.45 Rec*: WO*: 11289 ISs: DLD/JPW / /PRS/JTB	MODIFICATION LEVEL		CIRCUIT MODIFICATIONS ARE NOT TO BE MADE WITHOUT AUTHORITY FROM THE OFFICE OF SIGNAL DESIGN	Date: 03/08/13	UNION PACIFIC RAILROAD	Sh.: 11
						Q. A. LAST LEVEL CHECKED	DQ		Des: PRS	REGENERATIVE REPEATER HARVARD SUBDIVISION	
						LAST LEVEL MOD THIS TYPICAL	DQ		Chk: DLD/JPW		MP: 11.55
						LAST LEVEL BY DESIGNER	DU		AFE: 11289	Office of Sr AVP Engineering - Signal/TCO Omaha, Nebraska	ID: HAR1155.11S
						CHANGED FROM TYPICAL?	Y				
						REV 02/01/00 ITESINTC.1					

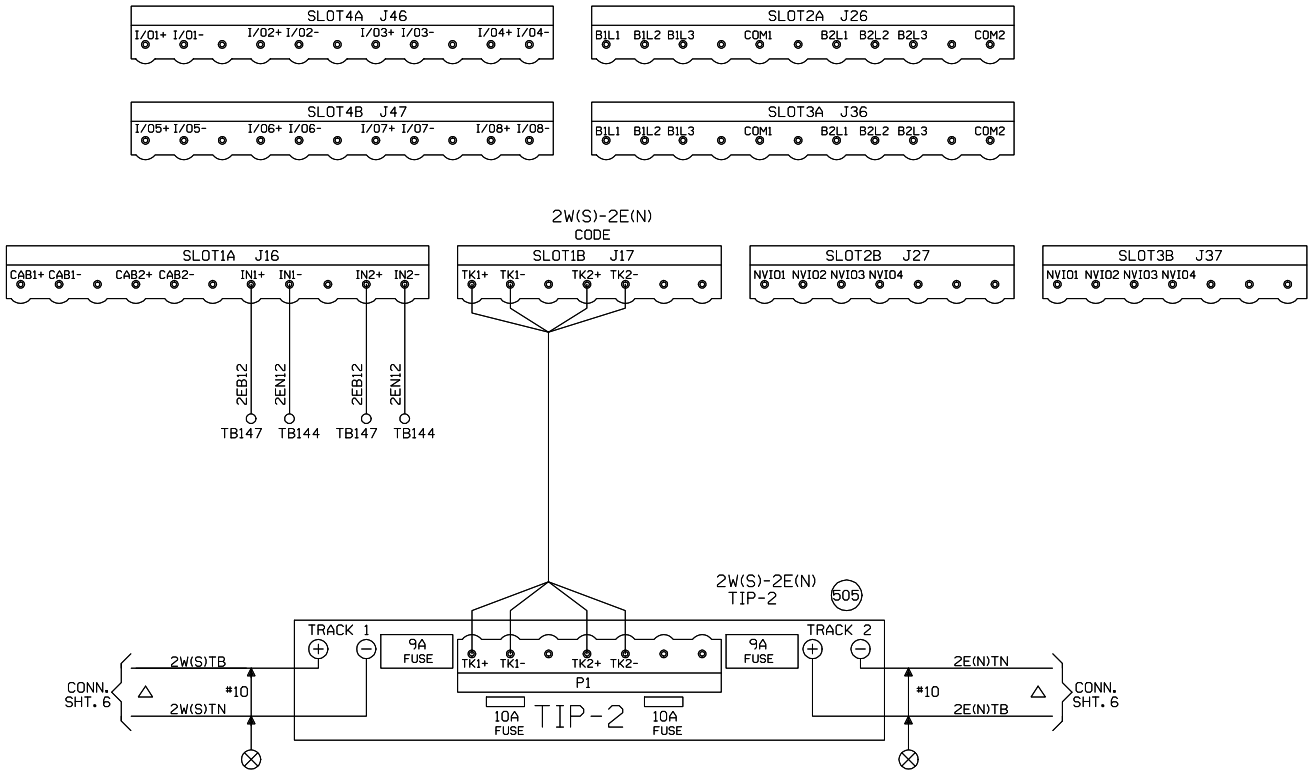

NEW SHEET

					Designed: 03/08/13 NAGLE CORRIDOR PROJECT. REPLACE DC CIRCUITS W/ CWT FROM M.P. 9.68 TO M.P. 12.45 Rec'd: WO#. 11289 ISs: DLD/JPW / /PRS/JTB	MODIFICATION LEVEL Q. A. LAST LEVEL CHECKED DQ LAST LEVEL MOD THIS TYPICAL DQ LAST LEVEL BY DESIGNER DU CHANGED FROM TYPICAL? Y REV 02/01/00 ITESINTC.1	CIRCUIT MODIFICATIONS ARE NOT TO BE MADE WITHOUT AUTHORITY FROM THE OFFICE OF SIGNAL DESIGN	Date: 03/08/13 Des: PRS Chk: DLD/JPW AFE: 11289	UNION PACIFIC RAILROAD REGENERATIVE REPEATER HARVARD SUBDIVISION Office of Sr AVP Engineering - Signal/TCO Omaha, Nebraska	Sh.: 12 MP: 11.55 ID: HAR1155.12S

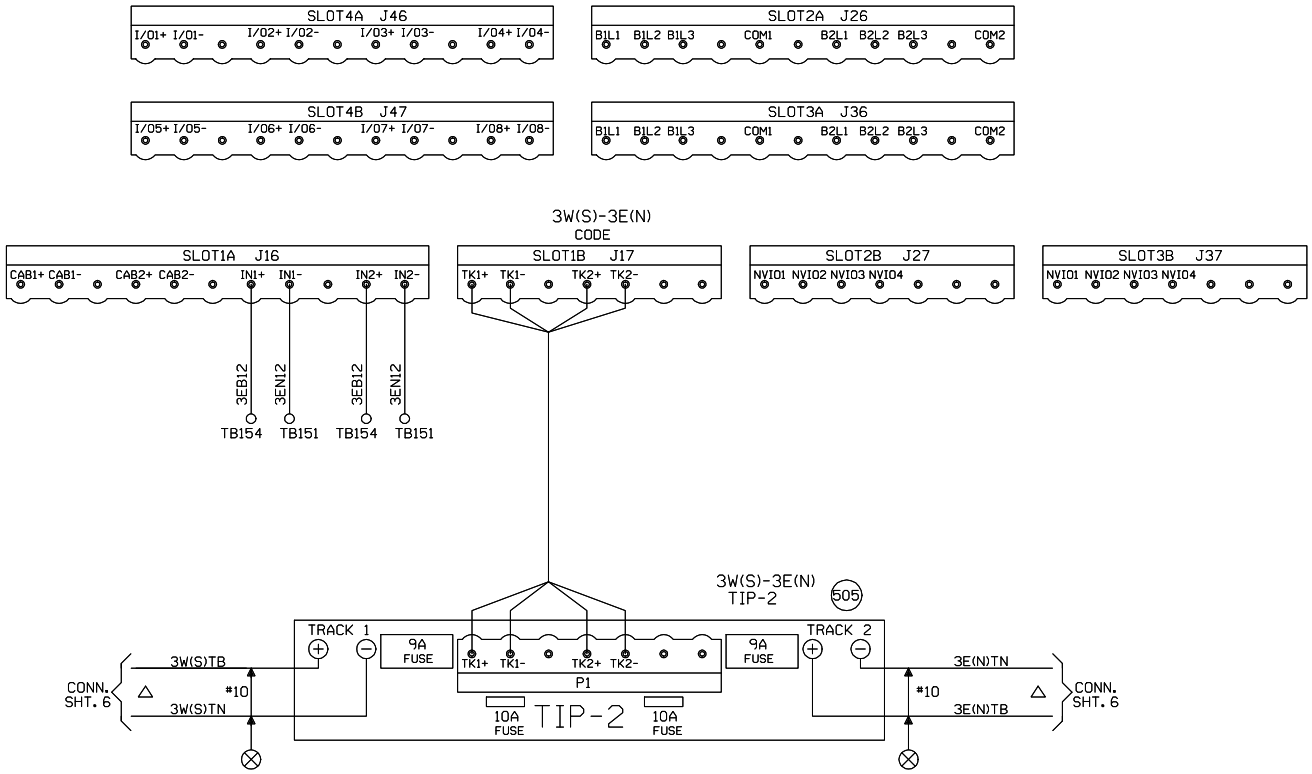

NEW SHEET

					Designed: 03/08/13 NAGLE CORRIDOR PROJECT. REPLACE DC CIRCUITS W/ CWT FROM M.P. 9.68 TO M.P. 12.45 Rec'd: WO#: 11289 ISs: DLD/JPW / /PRS/JTB	MODIFICATION LEVEL Q. A. LAST LEVEL CHECKED DQ LAST LEVEL MOD THIS TYPICAL DQ LAST LEVEL BY DESIGNER DU CHANGED FROM TYPICAL? Y REV 02/01/00 ITESINTC.1	CIRCUIT MODIFICATIONS ARE NOT TO BE MADE WITHOUT AUTHORITY FROM THE OFFICE OF SIGNAL DESIGN	Date: 03/08/13 Des: PRS Chk: DLD/JPW AFE: 11289	UNION PACIFIC RAILROAD REGENERATIVE REPEATER HARVARD SUBDIVISION Office of Sr AVP Engineering - Signal/TCO Omaha, Nebraska	Sh.: 13 MP: 11.55 ID: HAR1155.13S

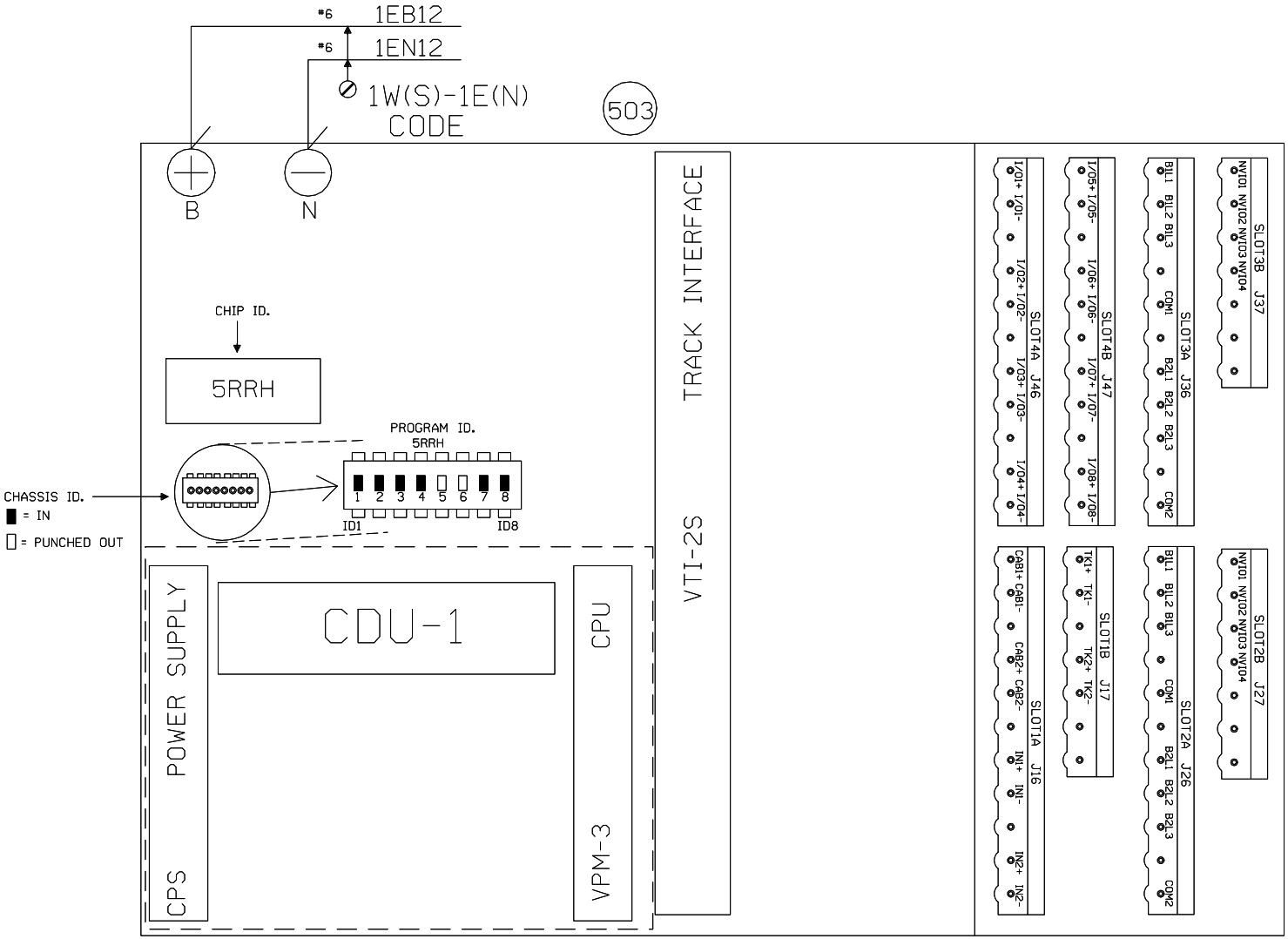

CODE 5
OPERATION SETTINGS

L	ALT-5	FALSE
R	ALT-5	FALSE

NEW SHEET

Designed: 03/08/13
NAGLE CORRIDOR PROJECT. REPLACE DC CIRCUITS W/ CWT FROM M.P. 9.68 TO M.P. 12.45
Rec'd: WO#: 11289
ISS: DLD/JPW / /PRS/JTB

MODIFICATION LEVEL	
Q. A. LAST LEVEL CHECKED	DQ
LAST LEVEL MOD THIS TYPICAL	DQ
LAST LEVEL BY DESIGNER	DU
CHANGED FROM TYPICAL?	Y

REV 02/01/00 ITESINTC.3

CIRCUIT MODIFICATIONS ARE NOT TO BE MADE WITHOUT AUTHORITY FROM THE OFFICE OF SIGNAL DESIGN

Date: 03/08/13
Des: PRS
Chk: DLD/JPW
AFE: 11289

UNION PACIFIC RAILROAD

REGENERATIVE REPEATER
HARVARD SUBDIVISION

Office of Sr AVP Engineering - Signal/TCO Omaha, Nebraska

Sh.: 14
MP: 11.55
ID: HAR1155.14S

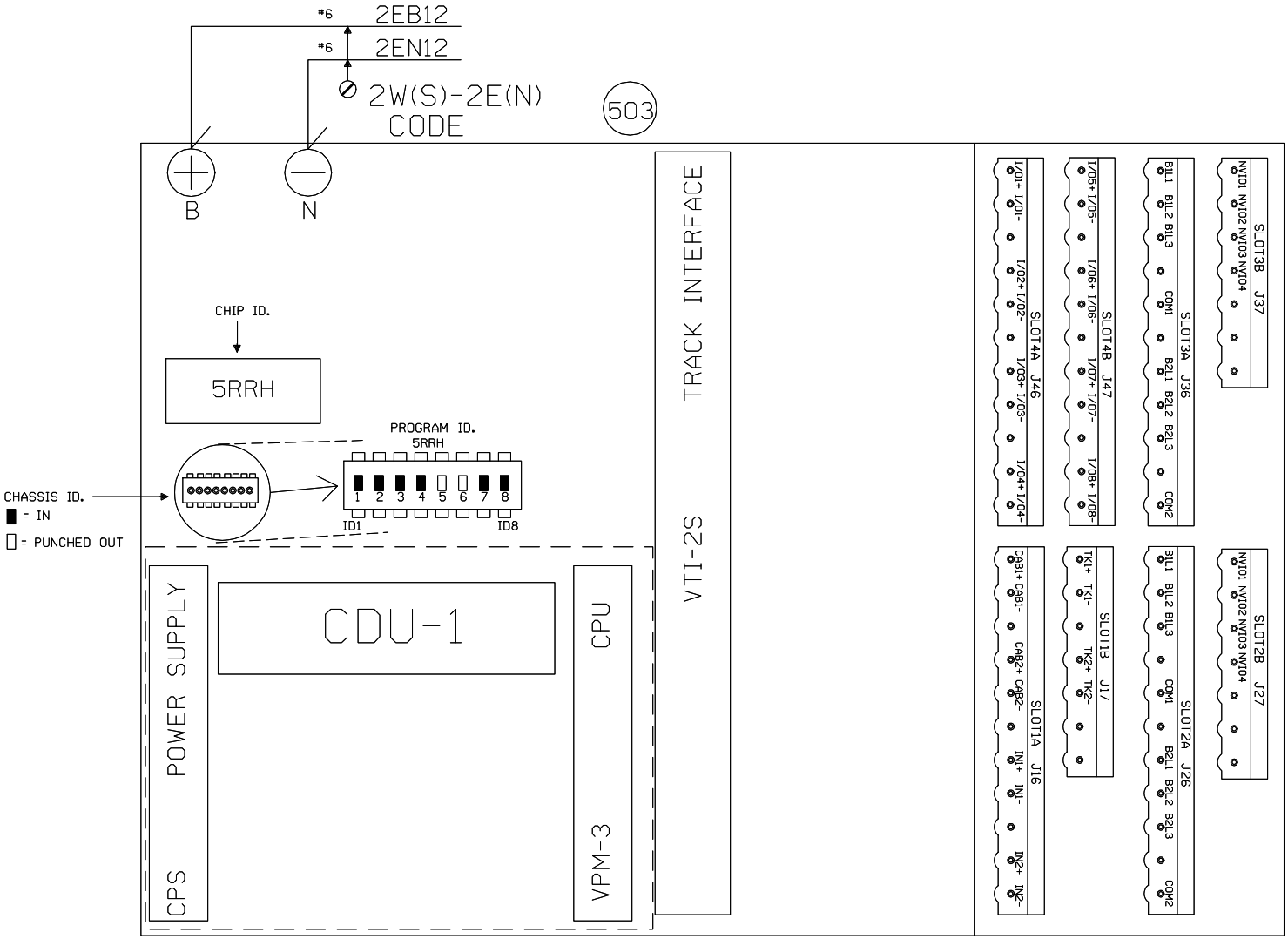

CODE 5
OPERATION SETTINGS

L	ALT-5	FALSE
R	ALT-5	FALSE

NEW SHEET

Designed: 03/08/13
NAGLE CORRIDOR PROJECT. REPLACE DC CIRCUITS W/ CWT FROM M.P. 9.68 TO M.P. 12.45
Rec#: 15: WO#: 11289 DLD/JPW / /PRS/JTB

MODIFICATION LEVEL	
Q. A. LAST LEVEL CHECKED	DQ
LAST LEVEL MOD THIS TYPICAL	DQ
LAST LEVEL BY DESIGNER	DU
CHANGED FROM TYPICAL?	Y

REV 02/01/00 ITESINTC.3

CIRCUIT MODIFICATIONS ARE NOT TO BE MADE WITHOUT AUTHORITY FROM THE OFFICE OF SIGNAL DESIGN

Date: 03/08/13
Des: PRS
Chk: DLD/JPW
AFE: 11289

UNION PACIFIC RAILROAD

REGENERATIVE REPEATER
HARVARD SUBDIVISION

Office of Sr AVP Engineering - Signal/TCO Omaha, Nebraska

Sh.: 15
MP: 11.55
ID: HAR1155.15S

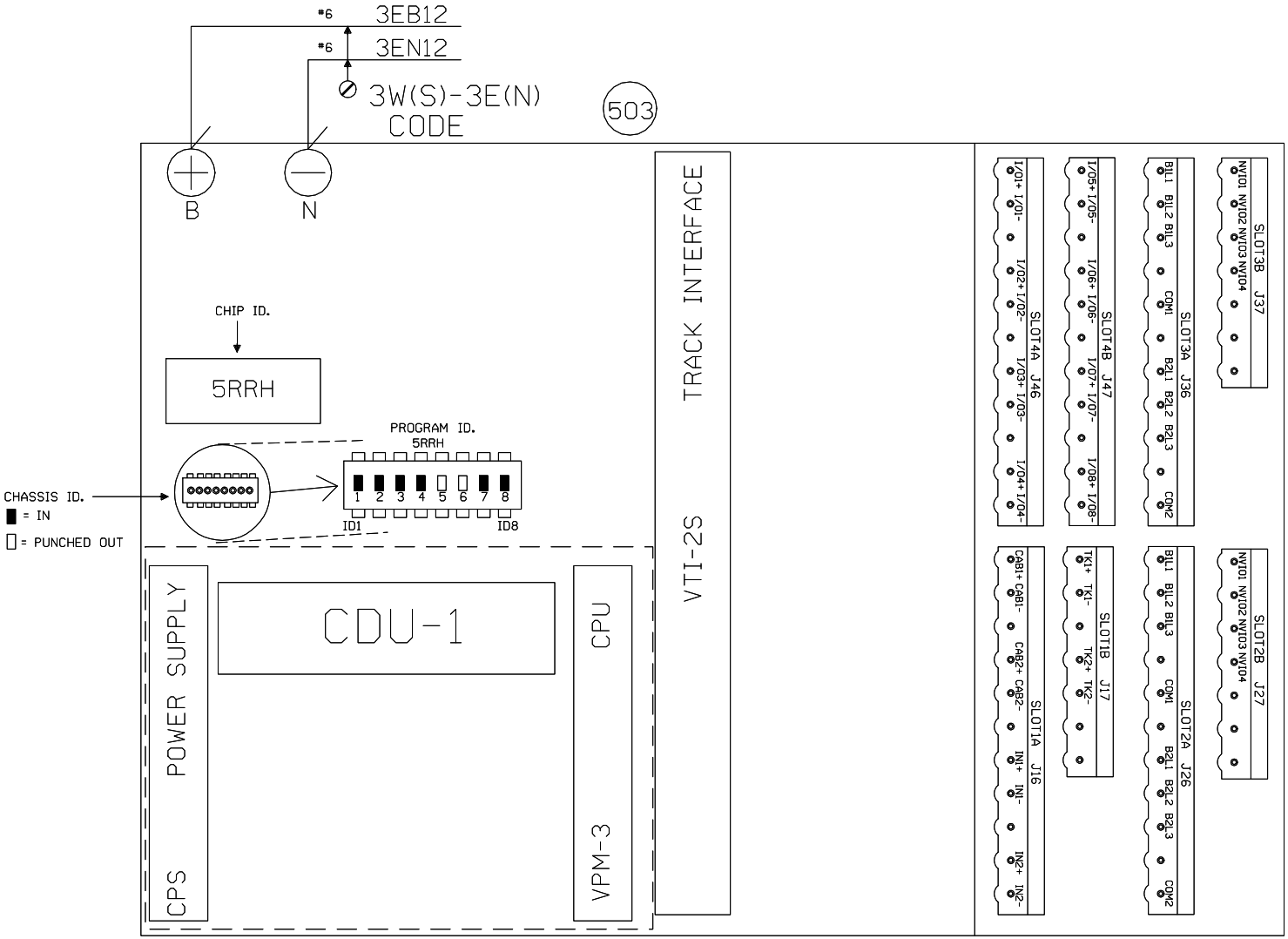

CODE 5
OPERATION SETTINGS

L	ALT-5	FALSE
R	ALT-5	FALSE

NEW SHEET

Designed: 03/08/13
NAGLE CORRIDOR PROJECT. REPLACE DC CIRCUITS W/ CWT FROM M.P. 9.68 TO M.P. 12.45
Rec'd: WO#. 11289
ISS: DLD/JPW / /PRS/JTB

MODIFICATION LEVEL	
Q. A. LAST LEVEL CHECKED	DQ
LAST LEVEL MOD THIS TYPICAL	DQ
LAST LEVEL BY DESIGNER	DU
CHANGED FROM TYPICAL?	Y

REV 02/01/00 ITESINTC.3

CIRCUIT MODIFICATIONS ARE NOT TO BE MADE WITHOUT AUTHORITY FROM THE OFFICE OF SIGNAL DESIGN

Date: 03/08/13
Des: PRS
Chk: DLD/JPW
AFE: 11289

UNION PACIFIC RAILROAD

REGENERATIVE REPEATER
HARVARD SUBDIVISION

Office of Sr AVP Engineering - Signal/TCO Omaha, Nebraska

Sh.: 16
MP: 11.55
ID: HAR1155.16S

TYPICAL CONTACT CONFIGURATIONS
FOR PLUG-IN RELAYS

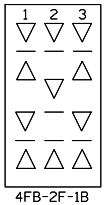

LEGEND

— = CONTACT HEEL

▽ = CONTACT FRONT

△ = CONTACT BACK

PLAN VIEW
8'x10' HOUSE
—NO SCALE—

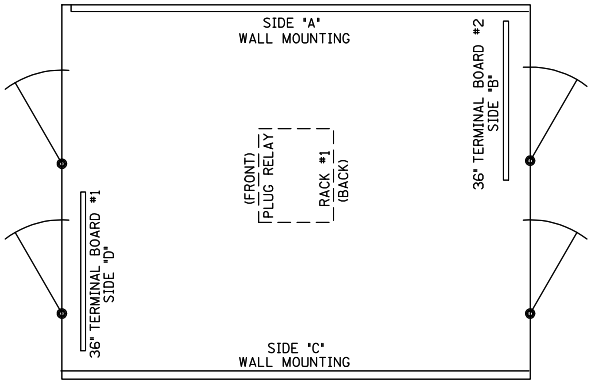

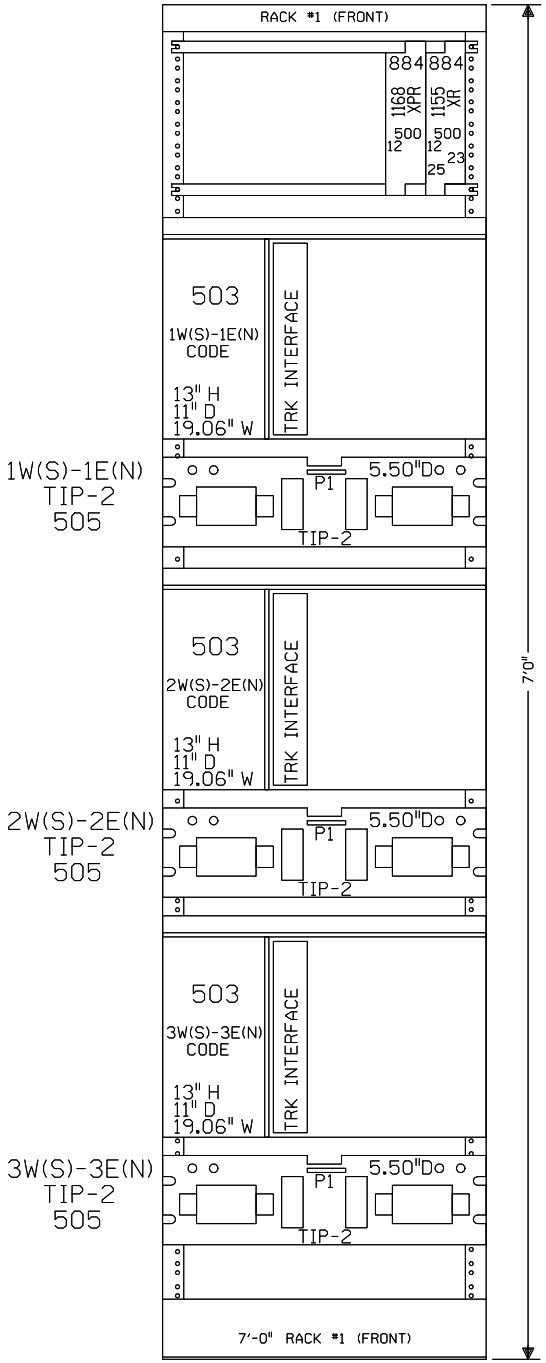

NEW SHEET

					Designed: 03/08/13 NAGLE CORRIDOR PROJECT. REPLACE DC CIRCUITS W/ CWT FROM M.P. 9.68 TO M.P. 12.45 Rec#: WO#: 11289 ISs: DLD/JPW / /PRS/JTB	MODIFICATION LEVEL		CIRCUIT MODIFICATIONS ARE NOT TO BE MADE WITHOUT AUTHORITY FROM THE OFFICE OF SIGNAL DESIGN	Date: 03/08/13	UNION PACIFIC RAILROAD	Sh.: 17
						Q. A. LAST LEVEL CHECKED	DS		Des: PRS	REGENERATIVE REPEATER HARVARD SUBDIVISION	
						LAST LEVEL MOD THIS TYPICAL	DS		Chk: DLD/JPW		MP: 11.55
						LAST LEVEL BY DESIGNER	DU		AFE: 11289	Office of Sr AVP Engineering - Signal/TCO Omaha, Nebraska	ID: HAR1155.17S
						CHANGED FROM TYPICAL?	Y				
						REV 12/18/10 MCROWEOSPTC6X8.15					

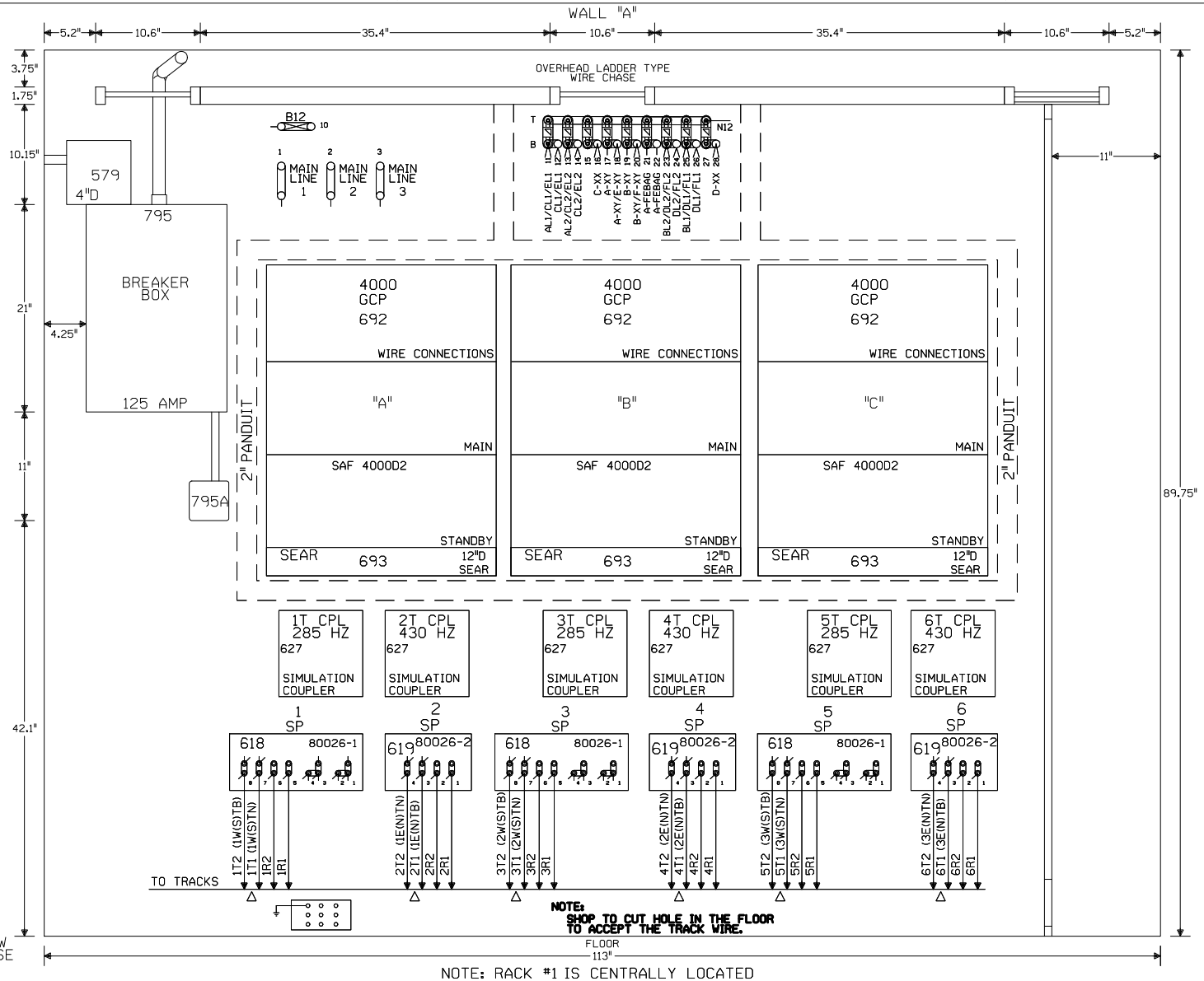

NOTE: RACK #1 IS CENTRALLY LOCATED

PLAN VIEW
8'X10' HOUSE
-NO SCALE-

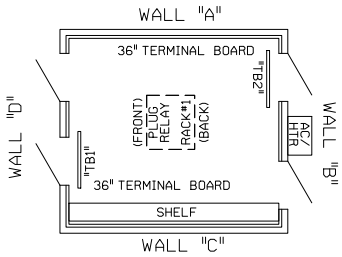

△ FIELD ENSURE PROPER TRACK POLARITY AND "AC" ACCORDINGLY

NEW SHEET

Designed: 03/08/13	NAGLE CORRIDOR PROJECT. REPLACE DC CIRCUITS W/ CWT FROM M.P. 9.68 TO M.P. 12.45
Rec#:	WO#: 11289
IS:	DLD/JPW / /PRS/JTB

MODIFICATION LEVEL	
Q. A. LAST LEVEL CHECKED	DU
LAST LEVEL MOD THIS TYPICAL	DU
LAST LEVEL BY DESIGNER	DU
CHANGED FROM TYPICAL?	Y

REV 07/01/11 MICROWEOS.14

CIRCUIT MODIFICATIONS ARE NOT TO BE MADE WITHOUT AUTHORITY FROM THE OFFICE OF SIGNAL DESIGN

Date:	03/08/13
Des:	PRS
Chk:	DLD/JPW
AFE:	11289

UNION PACIFIC RAILROAD

CHICAGO, ILLINOIS
HARLEM AVENUE/ILL43
HARVARD SUBDIVISION

Office of Sr AVP Engineering - Signal/TCO Omaha, Nebraska

Sh.:	18
DOT	173893K
MP:	11.55
ID:	HAR1155.18X

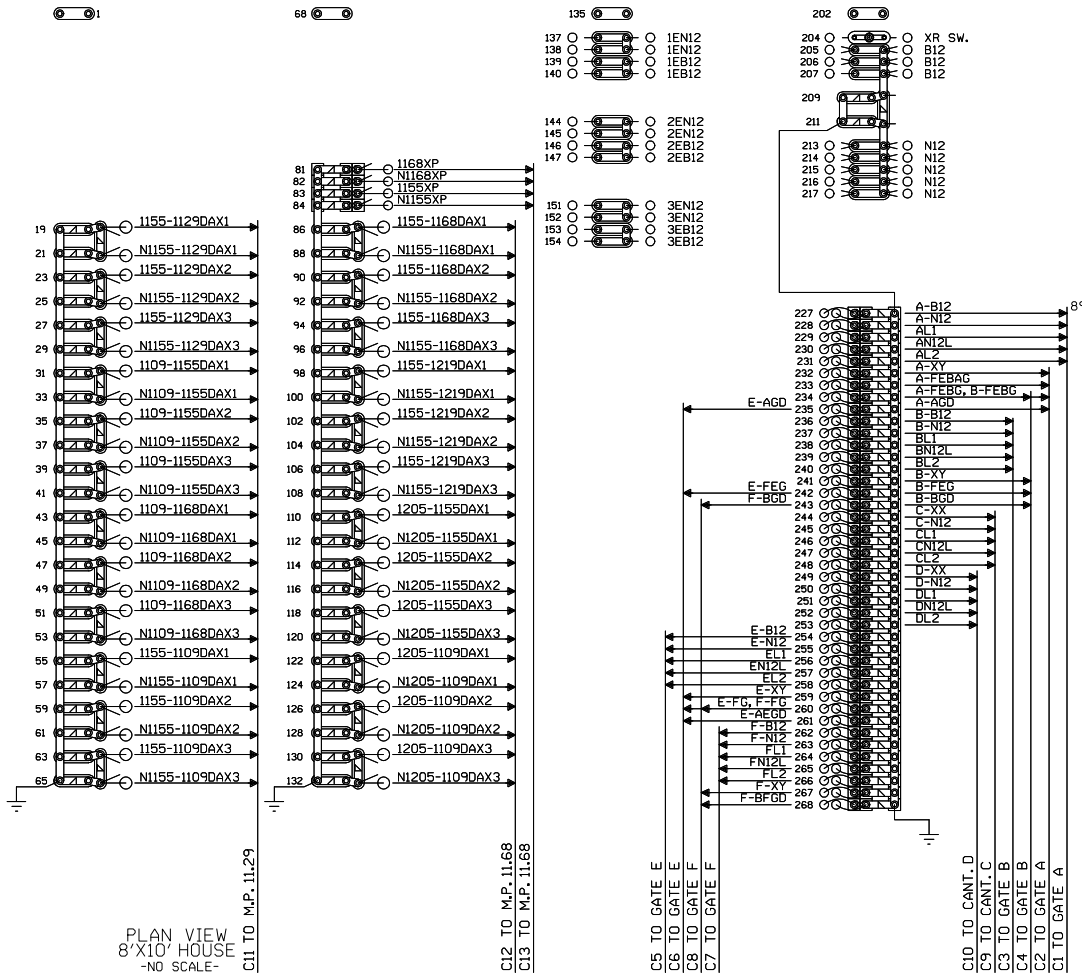

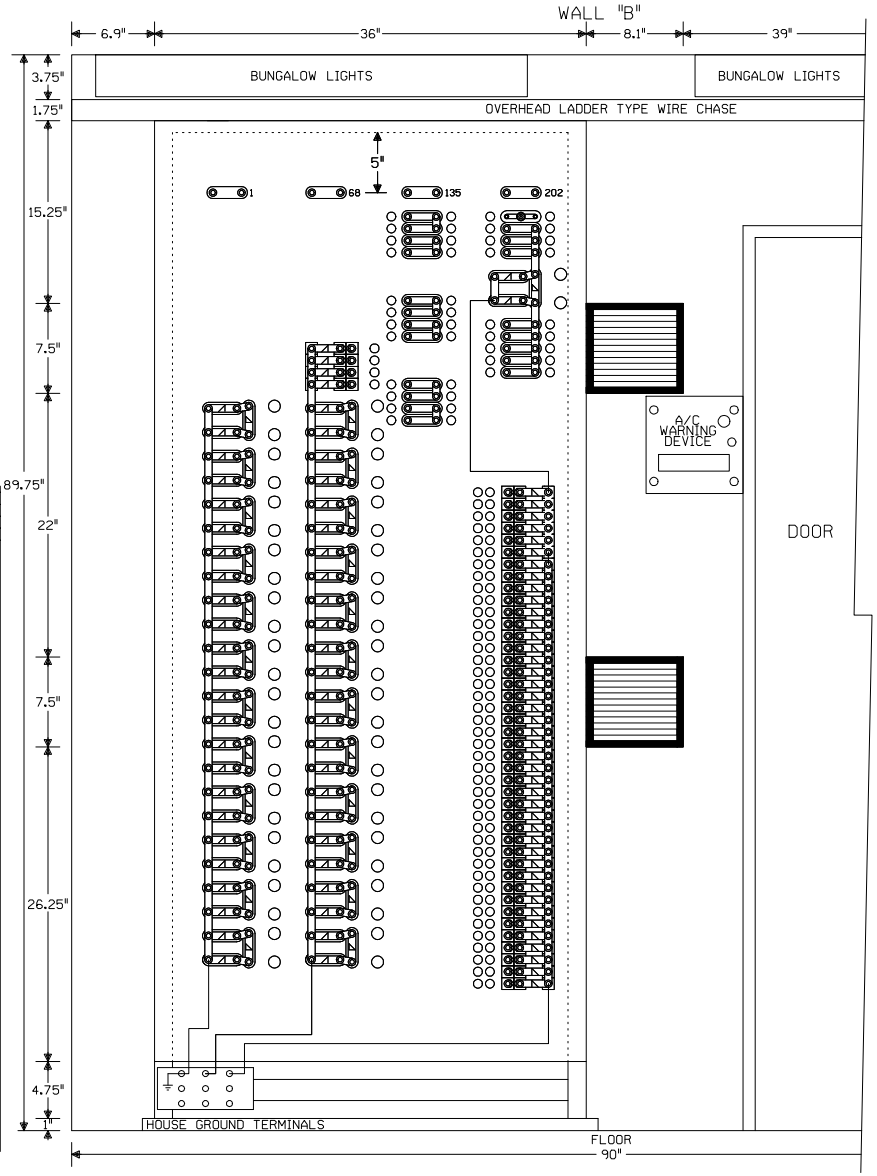

PLAN VIEW
8'X10' HOUSE
-NO SCALE-

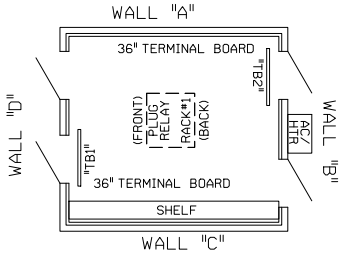

NOTE: ALL DIMENSIONS SHOWN ARE APPROXIMATE.

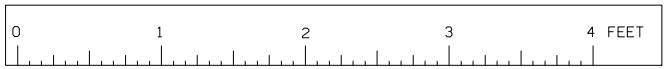

SCALE: 1.5 INCHES = 1 FOOT

NOTE: NO TEST LINKS TO BE INSTALLED WITH CROSSING LIGHTING OR GATE MECH CIRCUITRY

NEW SHEET

				Designed: 03/08/13 NAGLE CORRIDOR PROJECT. REPLACE DC CIRCUITS W/ CWT FROM M.P. 9.68 TO M.P. 12.45 Rec#: WO#: 11289 IS: DLD/JPW / /PRS/JTB	MODIFICATION LEVEL Q. A. LAST LEVEL CHECKED DU LAST LEVEL MOD THIS TYPICAL DU LAST LEVEL BY DESIGNER DU CHANGED FROM TYPICAL? Y REV 07/01/11 MICROVEOS.15	CIRCUIT MODIFICATIONS ARE NOT TO BE MADE WITHOUT AUTHORITY FROM THE OFFICE OF SIGNAL DESIGN	Date: 03/08/13 Des: PRS Chk: DLD/JPW AFE: 11289	UNION PACIFIC RAILROAD CHICAGO, ILLINOIS HARLEM AVENUE/ILL43 HARVARD SUBDIVISION Office of Sr AVP Engineering - Signal/TCO Omaha, Nebraska	Sh.: 19 DOT 173893K MP: 11.55 ID: HAR1155.19X

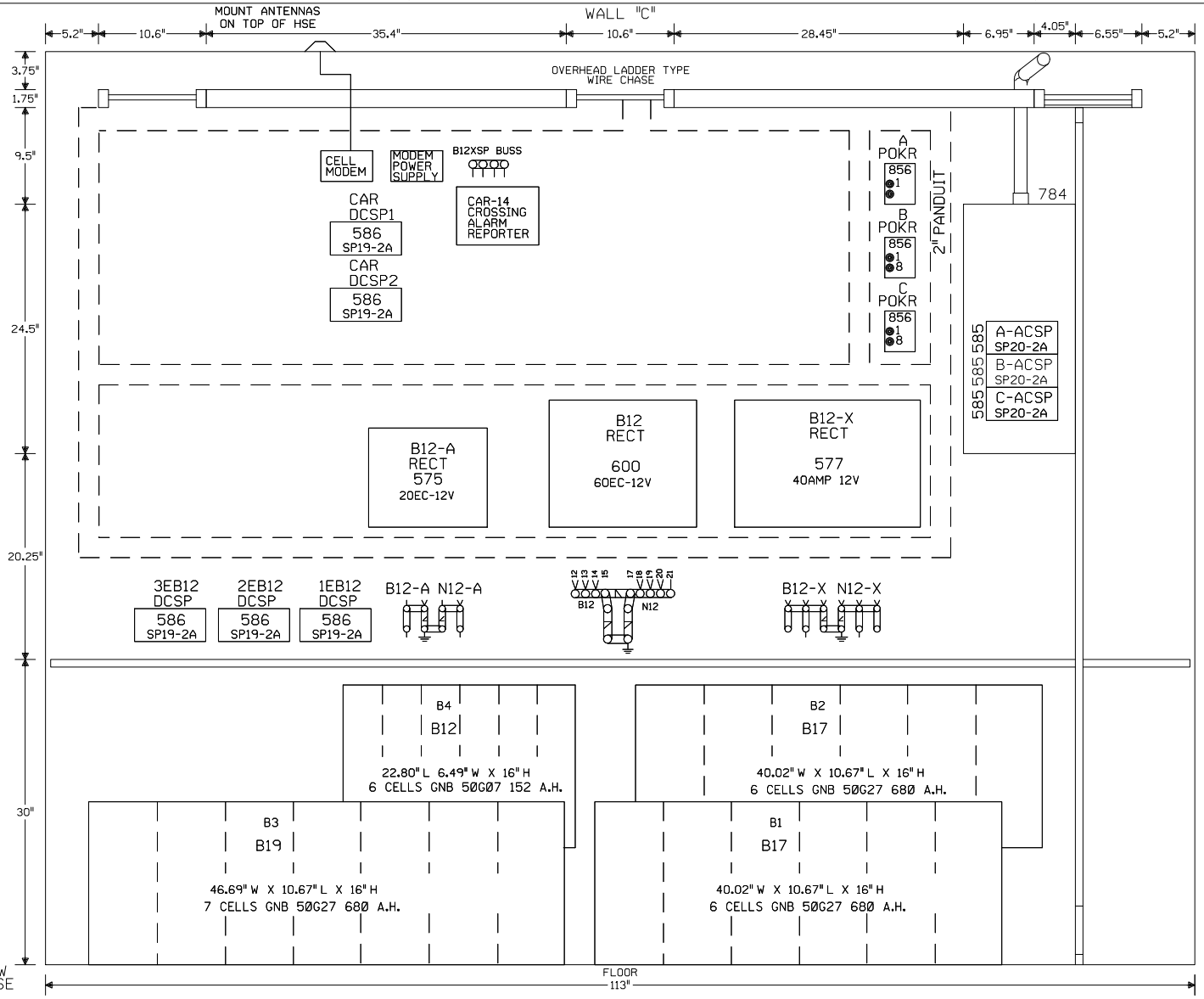

PLAN VIEW
8'X10' HOUSE
-NO SCALE-

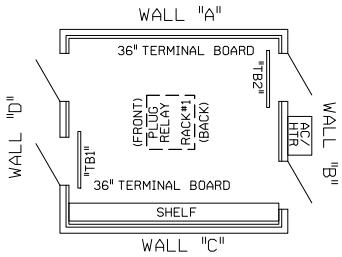

NOTE: ALL DIMENSIONS SHOWN ARE APPROXIMATE.

NEW SHEET

Designed: 03/08/13
NAGLE CORRIDOR PROJECT. REPLACE DC CIRCUITS W/ CWT FROM M.P. 9.68 TO M.P. 12.45
Req#: WO#: 11289
IS: DLD/JPW / /PRS/JTB

MODIFICATION LEVEL	
Q. A. LAST LEVEL CHECKED	DU
LAST LEVEL MOD THIS TYPICAL	DU
LAST LEVEL BY DESIGNER	DU
CHANGED FROM TYPICAL?	Y

REV 07/01/11 MICROWEOS.16

CIRCUIT MODIFICATIONS ARE NOT TO BE MADE WITHOUT AUTHORITY FROM THE OFFICE OF SIGNAL DESIGN

Date: 03/08/13
Des: PRS
Chk: DLD/JPW
AFE: 11289

UNION PACIFIC RAILROAD
CHICAGO, ILLINOIS
HARLEM AVENUE/ILL43
HARVARD SUBDIVISION
Office of Sr AVP Engineering - Signal/TCO Omaha, Nebraska

Sh.: 20
DOT 173893K
MP: 11.55
ID: HAR1155.20X