```
Minimum Program Steps Report
----------------------------

Location and SIN
----------------
DOT Number: 173893K
Milepost Number: M.P. 11.55
Site Name: CHICAGO, ILLINOIS

SIN: 762010010016 *

* Parameter is part of office check number calculation.

MCF and Template Selection
--------------------------
MCF Name: GCP-T6X-02-4.mcf
MCF Revision: 24
MCFCRC: 09FC363B

Template = 1D:3 Uni pairs (OCCN) *

* Parameter is part of office check number calculation.

Minimum Program Steps
---------------------
TEMPLATE:  module configuration
Track 5/RIO 2 Slot = RIO (OCCN) *
SSCC 1 Slot = Not Used (OCCN) *
SSCC 2 Slot = Not Used (OCCN) *

TEMPLATE:  track 1-Uni, Island
Track 1 : GCP Frequency = 286 Hz (Field,TCN)
Track 1 : Approach Distance = 2434 ft (Set in Field,TCN)
Track 1 : Prime Warning Time = 54 sec (OCCN) *
Track 1 : Prime UAX = IP (OCCN) *
Track 1 : Prime UAX Pickup = 15 sec (OCCN) *
Track 1 : GCP Transmit Level = Medium (Set in Field,TCN)
Track 1 : Uni/Bi/Sim-Bidirnl = Sim. Bidirnl (OCCN) *
Track 1 : Isl Frequency = 7.1 kHz (Set in Field)
Track 1 : Island Distance = 203 ft (Set in Field,TCN)

TEMPLATE:  track 1 Daxes
Track 1 : Dax A Used = Yes (OCCN) *
Track 1 : Dax A Warning Time = 53 sec (OCCN) *
Track 1 : Dax A Offset Distance = 739 ft (Set in Field)
Track 1 : Dax B Used = Yes (OCCN) *
Track 1 : Dax B Warning Time = 29 sec (OCCN) *
Track 1 : Dax B Offset Distance = 3529 ft (Set in Field)

TEMPLATE:  track 2-Uni,No Island
Track 2 : GCP Frequency = 431 Hz (Field,TCN)
Track 2 : Approach Distance = 2629 ft (Set in Field,TCN)
Track 2 : Prime Warning Time = 54 sec (OCCN) *
Track 2 : Prime UAX = IP (OCCN) *
Track 2 : Prime UAX Pickup = 15 sec (OCCN) *
Track 2 : GCP Transmit Level = Medium (Set in Field,TCN)
Track 2 : Uni/Bi/Sim-Bidirnl = Sim. Bidirnl (OCCN) *

TEMPLATE:  track 2 Daxes
Track 2 : Dax A Used = Yes (OCCN) *
Track 2 : Dax A Warning Time = 27 sec (OCCN) *
Track 2 : Dax A Offset Distance = 1306 ft (Set in Field)
Track 2 : Dax B Used = Yes (OCCN) *
Track 2 : Dax B Warning Time = 41 sec (OCCN) *
Track 2 : Dax B Offset Distance = 2480 ft (Set in Field)

TEMPLATE:  track Anding
AND 2 Used = Yes (OCCN) *
AND 3 Used = Yes (OCCN) *

TEMPLATE:  AND 2
AND 2 Track 1 = Dax A (OCCN) *
AND 2 Enable Used = Yes (OCCN) *

TEMPLATE:  AND 3
AND 3 Track 2 = Dax B (OCCN) *
AND 3 Enable Used = Yes (OCCN) *

TEMPLATE:  OOS
OOS Control = OOS IPs (OCCN) *
T2 OOS Control = OOS Input 1 (OCCN) *

TEMPLATE:  OP assignment 1
OUT 1.1 = AND 2 (OCCN) *
OUT 1.2 = T1 Dax B (OCCN) *
OUT 2.1 = T2 Dax A (OCCN) *
OUT 2.2 = AND 3 (OCCN) *

TEMPLATE:  OP assignment 2
OUT 5.1 = AND 1 XR (OCCN) *

TEMPLATE:  IP assignment 1
IN 1.1 = T1 Prime UAX (OCCN) *
IN 1.2 = Out Of Service IP 1 (OCCN) *
IN 2.1 = T2 Prime UAX (OCCN) *
IN 2.2 = AND 3 Enable (OCCN) *

TEMPLATE:  IP assignment 2
IN 5.1 = AND 2 Enable (OCCN) *

GCP:  track 1
Track 1 : GCP Freq Category = Offset (Set in Field)

GCP:  track 2
Track 2 : GCP Freq Category = Offset (Set in Field)

ADVANCED:  site options
Daylight Savings = On (Set in Field)

* Parameter is part of office check number calculation.

Check Numbers
-------------
Office Check Number: 4AA5A1B9
Config. Check Number: 219FE377
(Based on MCF Revision 24)

Parameters not part of office check number calculation:

Track 1 : GCP Frequency = 286 Hz
Track 1 : Approach Distance = 2434 ft (Set in Field)
Track 1 : GCP Transmit Level = Medium (Set in Field)
Track 1 : Isl Frequency = 7.1 kHz
Track 1 : Island Distance = 203 ft (Set in Field)
Track 1 : Dax A Offset Distance = 739 ft (Set in Field)
Track 1 : Dax B Offset Distance = 3529 ft (Set in Field)
Track 2 : GCP Frequency = 431 Hz
Track 2 : Approach Distance = 2629 ft (Set in Field)
Track 2 : GCP Transmit Level = Medium (Set in Field)
Track 2 : Dax A Offset Distance = 1306 ft (Set in Field)
Track 2 : Dax B Offset Distance = 2480 ft (Set in Field)
Track 1 : GCP Freq Category = Offset (Set in Field)
Track 2 : GCP Freq Category = Offset (Set in Field)
Daylight Savings = On (Set in Field)

Comments
--------
<none>

Configuration Package File
--------------------------
Filename: HAR1155_173893K_C.pac
Path: H:\01-Xing\up110143\GCP Programs\M.P. 11.55\
Date/Time: 10/26/2012 19:15:40
```

NEW SHEET

Designed: 03/08/13
NAGLE CORRIDOR PROJECT. REPLACE DC CIRCUITS W/ CWT FROM M.P. 9.68 TO M.P. 12.45
Rec*: WO*: 11289
IS: DLD/JPW
/ /PRS/JTB

NOTE: Actual OFFSET and ISLAND distances must be verified by field personnel.

CIRCUIT MODIFICATIONS ARE NOT TO BE MADE WITHOUT AUTHORITY FROM THE OFFICE OF SIGNAL DESIGN

Date:	03/08/13
Des:	PRS
Chk:	DLD/JPW
AFE:	11289

UNION PACIFIC RAILROAD

CHICAGO, ILLINOIS
HARLEM AVENUE/ILL43
HARVARD SUBDIVISION

Office of Sr AVP Engineering - Signal/TCO Omaha, Nebraska

Sh.:	5A
DOT	173893K
MP:	11.55
ID:	HAR1155.5AX

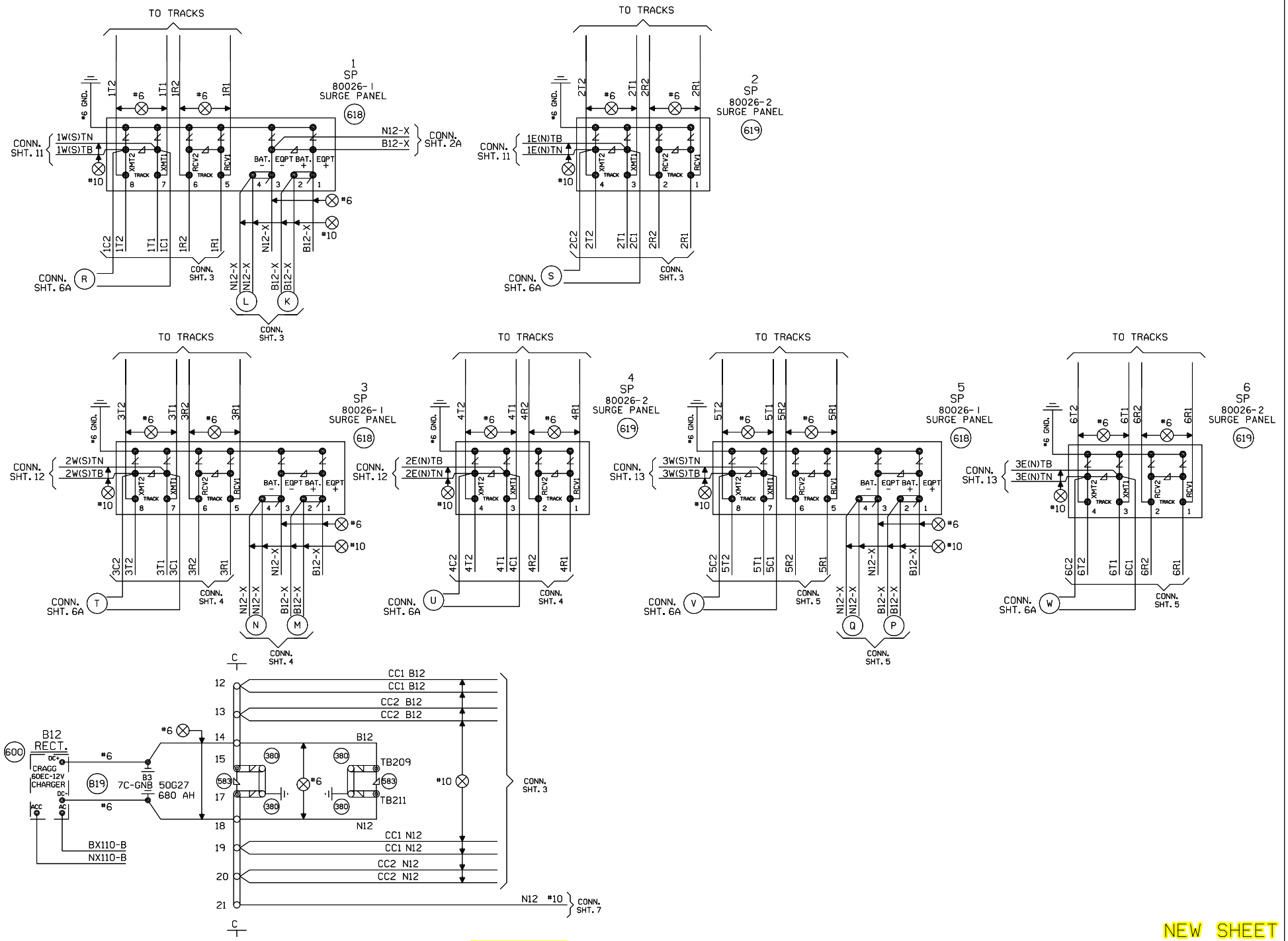

NEW SHEET

Designed: 03/08/13 NAGLE CORRIDOR PROJECT. REPLACE DC CIRCUITS W/ CWT FROM M.P. 9.68 TO M.P. 12.45 Rec#: WO#: 11289 IS: DLD/JPW / /PRS/JTB	MODIFICATION LEVEL		CIRCUIT MODIFICATIONS ARE NOT TO BE MADE WITHOUT AUTHORITY FROM THE OFFICE OF SIGNAL DESIGN	Date: 03/08/13 Des: PRS Chk: DLD/JPW AFE: 11289	UNION PACIFIC RAILROAD CHICAGO, ILLINOIS HARLEM AVENUE/ILL43 HARVARD SUBDIVISION Office of Sr AVP Engineering - Signal/TCO Omaha, Nebraska	Sh.: 6 DOT 173893K MP: 11.55 ID: HAR1155.6X
	Q. A. LAST LEVEL CHECKED	DU				
	LAST LEVEL MOD THIS TYPICAL	DU				
	LAST LEVEL BY DESIGNER	DU				
	CHANGED FROM TYPICAL?	Y				
	REV 01.24.11 4K 4TKSPGFC.4					