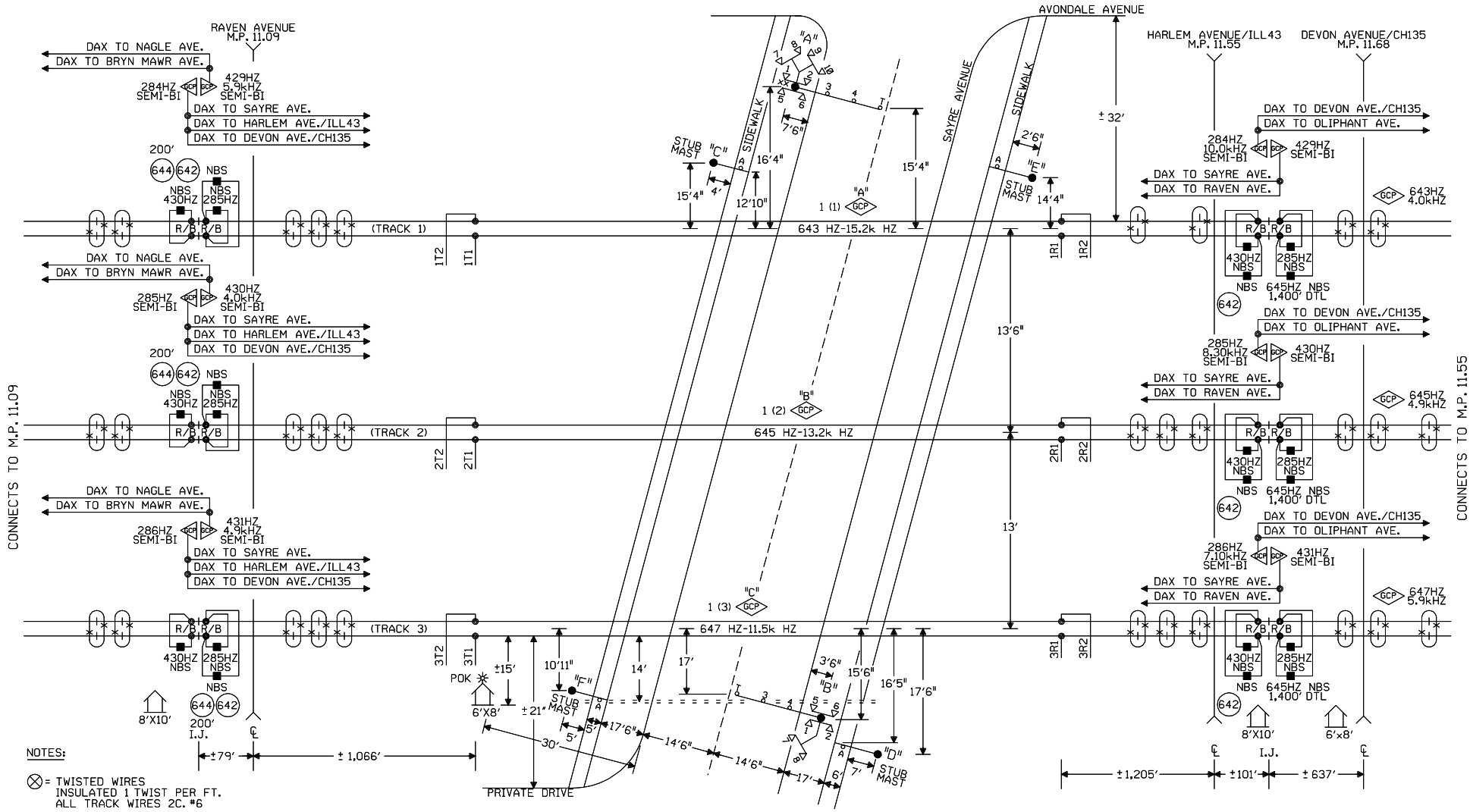

NOTES:

⊗ = TWISTED WIRES
INSULATED 1 TWIST PER FT.
ALL TRACK WIRES 2C. #6

TRANSMITTER AND RECEIVER LEADS TO BE SEPARATED BY AT LEAST 12" IN TRENCH, LENGTHS SHOULD NOT EXCEED MANUFACTURER'S RECOMMENDATION.

TOP OF FOUNDATION TO BE AT SAME ELEVATION AS THE SURFACE OF THE TRAVELED WAY & NO MORE THAN 4" ABOVE THE SURFACE OF THE GROUND.

ALL BUNGALOW WIRING TO BE #16 AWG FLEX UNLESS OTHERWISE SPECIFIED EXCEPT ALL GROUND WIRE TO BE #6 AWG FLEX OR LARGER.

ALL WIRING IN GATE MECHANISM TO BE #10 "AWG FLEX".

REFER TO UP STANDARD DWG FOR BUNGALOW GROUNDING.

PORTABLE GENERATOR EXTENSION CORD FOR 240V TO 240V IS PROVIDED AS WELL AS A 120V TO 240V ADAPTER.

ALL LIGHTS TO BE 12" ROUNDELS.
= = = = = = 4" X 100' CONDUIT

LIGHTS: LED LIGHTS ← EXISTING
xx = BELL

GATE A: 21'
GATE B: 16'
PED GATE C: 16' ← EXISTING
PED GATE D: 16'
PED GATE E: 10'5"
PED GATE F: 7'10"

= OUT

W(S) ← → E(N)

NEW SHEET

Designed: 03/08/13
NAGLE CORRIDOR PROJECT. REPLACE DC CIRCUITS W/ CWT FROM M.P. 9.68 TO M.P. 12.45
Rec#: WO#: 11289
ISs: DLD/JPW /PRS/JTB

MODIFICATION LEVEL	
Q. A. LAST LEVEL CHECKED	DU
LAST LEVEL MOD THIS TYPICAL	DU
LAST LEVEL BY DESIGNER	DU
CHANGED FROM TYPICAL?	Y

REV 01.24.11 4K 2TKUGTYP.1

CIRCUIT MODIFICATIONS ARE NOT TO BE MADE WITHOUT AUTHORITY FROM THE OFFICE OF SIGNAL DESIGN

Date: 03/08/13
Des: PRS
Chk: DLD/JPW
AFE: 11289

UNION PACIFIC RAILROAD
CHICAGO, ILLINOIS
SAYRE AVENUE
HARVARD SUBDIVISON
Office of Sr AVP Engineering - Signal/TCO Omaha, Nebraska

Sh.: 1
DOT 173892D
MP: 11.29
ID: HAR1129.1X

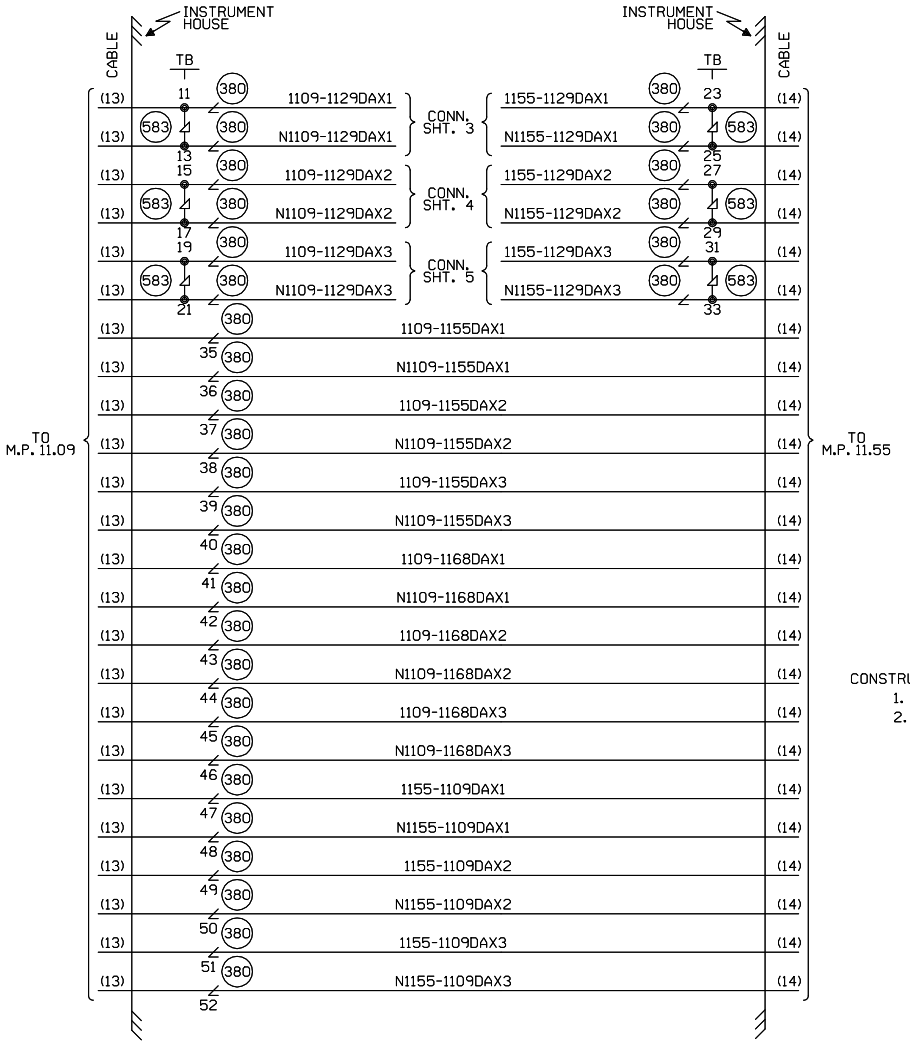

CONSTRUCTION NOTES:

1. PTMW BUNGALOW 6'X8' (P/N: 520-2724).
2. REUSE EXISTING GATES "A" & "B" AND PED GATES "C", "D", "E", & "F".

CABLE TABULATION

CABLE NO. 13 (2)-12C#14 U.G.B.T. HOUSE TO M.P. 11.09.
CABLE NO. 14 (2)-12C#14 U.G.B.T. HOUSE TO M.P. 11.55.

NEW SHEET

Designed: 03/08/13
NAGLE CORRIDOR PROJECT. REPLACE DC CIRCUITS W/ CWT FROM M.P. 9.68 TO M.P. 12.45
Rec#: WO#: 11289
IS: DLD/JPW
/ /PRS/JTB

MODIFICATION LEVEL	
Q. A. LAST LEVEL CHECKED	DU
LAST LEVEL MOD THIS TYPICAL	DU
LAST LEVEL BY DESIGNER	DU
CHANGED FROM TYPICAL?	Y

REV 01.24.11 4K 2TKUGTYP.1

CIRCUIT MODIFICATIONS ARE NOT TO BE MADE WITHOUT AUTHORITY FROM THE OFFICE OF SIGNAL DESIGN

Date: 03/08/13
Des: PRS
Chk: DLD/JPW
AFE: 11289

UNION PACIFIC RAILROAD
CHICAGO, ILLINOIS
SAYRE AVENUE
HARVARD SUBDIVISON
Office of Sr AVP Engineering - Signal/TCO Omaha, Nebraska

Sh.: 1A
DOT 173892D
MP: 11.29
ID: HAR1129.1AX

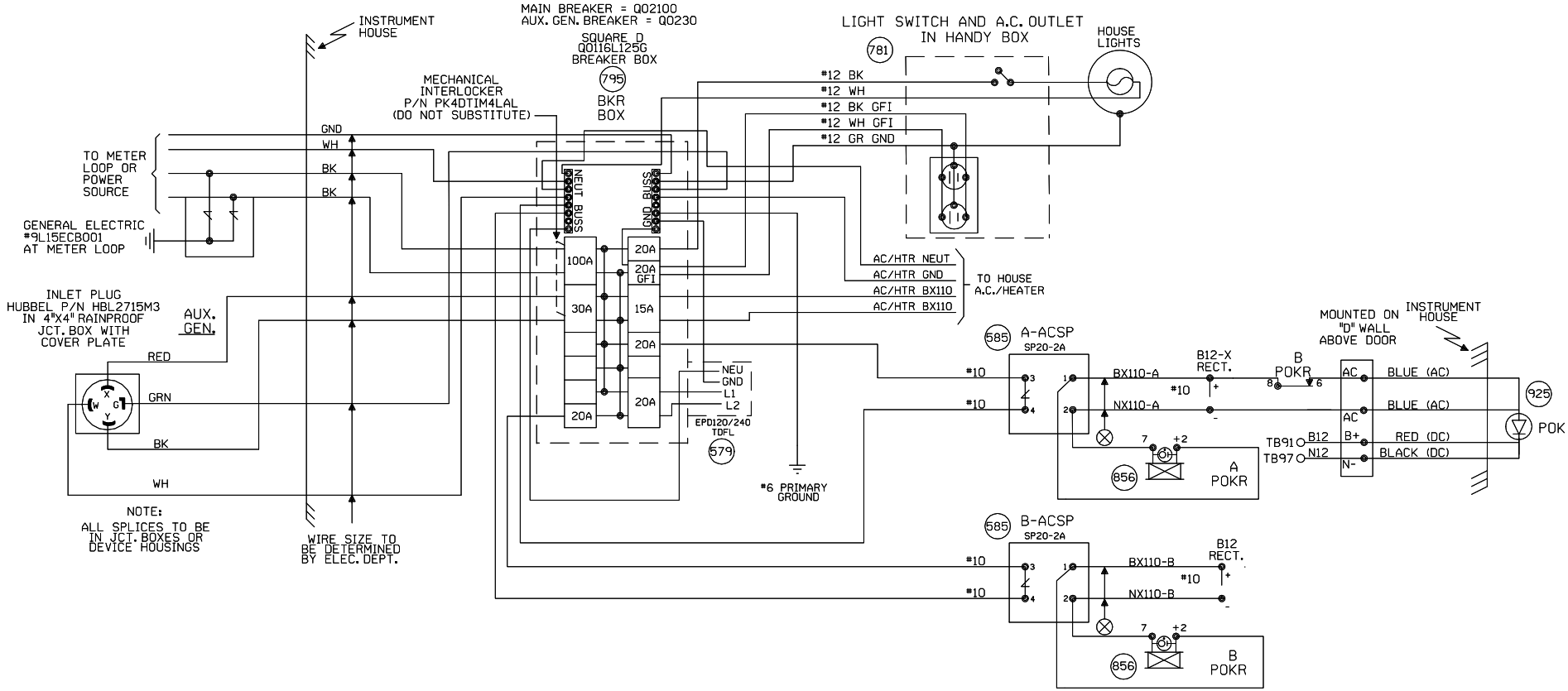
INSTRUMENT HOUSE
MAIN BREAKER = Q0210O
AUX. GEN. BREAKER = Q0230
SQUARE D
Q0116L125G
BREAKER BOX
795
BKR BOX
MECHANICAL INTERLOCKER
P/N PK4DTIM4LAL
(DO NOT SUBSTITUTE)
LIGHT SWITCH AND A.C. OUTLET IN HANDY BOX
781
HOUSE LIGHTS
#12 BK
#12 WH
#12 BK GFI
#12 WH GFI
#12 GR GND
TO METER LOOP OR POWER SOURCE
GND
WH
BK
BK
GENERAL ELECTRIC
#9L15ECB001
AT METER LOOP
NEUT BUSS
GND BUSS
100A
30A
20A
20A
GFI
15A
20A
20A
20A
AC/HTR NEUT
AC/HTR GND
AC/HTR BX110
AC/HTR BX110
TO HOUSE A.C./HEATER
INLET PLUG
HUBBEL P/N HBL2715M3
IN 4"X4" RAINPROOF
JCT. BOX WITH
COVER PLATE
AUX. GEN.
RED
GRN
BK
WH
NEU
GND
L1
L2
EPD120/240
TDFL
579
#6 PRIMARY GROUND
585
A-ACSP
SP20-2A
#10
#10
BX110-A
NX110-A
B12-X RECT.
#10
B POKR
856
A POKR
MOUNTED ON "D" WALL ABOVE DOOR
INSTRUMENT HOUSE
AC
AC
B+
N-
BLUE (AC)
BLUE (AC)
RED (DC)
BLACK (DC)
TB91
TB97
B12
N12
925
POK
585
B-ACSP
SP20-2A
#10
#10
BX110-B
NX110-B
B12 RECT.
#10
856
B POKR
NOTE:
ALL SPLICES TO BE IN JCT. BOXES OR DEVICE HOUSINGS
WIRE SIZE TO BE DETERMINED BY ELEC. DEPT.

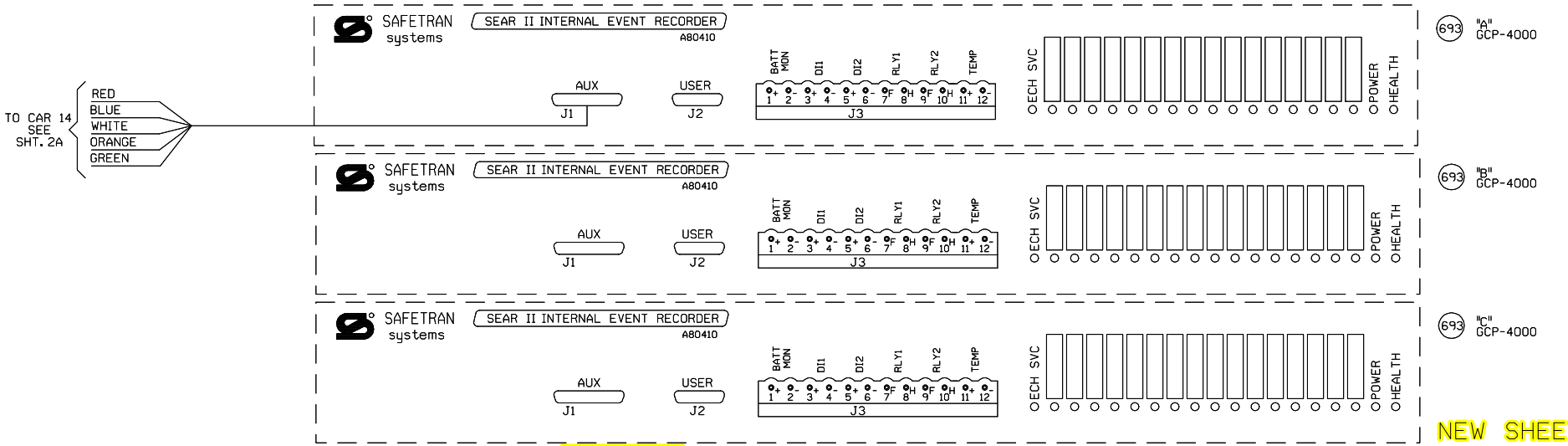
TO CAR 14 SEE SHT. 2A
RED
BLUE
WHITE
ORANGE
GREEN
SAFETRAN systems
SEAR II INTERNAL EVENT RECORDER
A80410
AUX
J1
USER
J2
BATT MON
DI1
DI2
RLY1
RLY2
TEMP
J3
ECH SVC
POWER
HEALTH
693
"A"
GCP-4000
SAFETRAN systems
SEAR II INTERNAL EVENT RECORDER
A80410
AUX
J1
USER
J2
BATT MON
DI1
DI2
RLY1
RLY2
TEMP
J3
ECH SVC
POWER
HEALTH
693
"B"
GCP-4000
SAFETRAN systems
SEAR II INTERNAL EVENT RECORDER
A80410
AUX
J1
USER
J2
BATT MON
DI1
DI2
RLY1
RLY2
TEMP
J3
ECH SVC
POWER
HEALTH
693
"C"
GCP-4000

NEW SHEET

| | | |

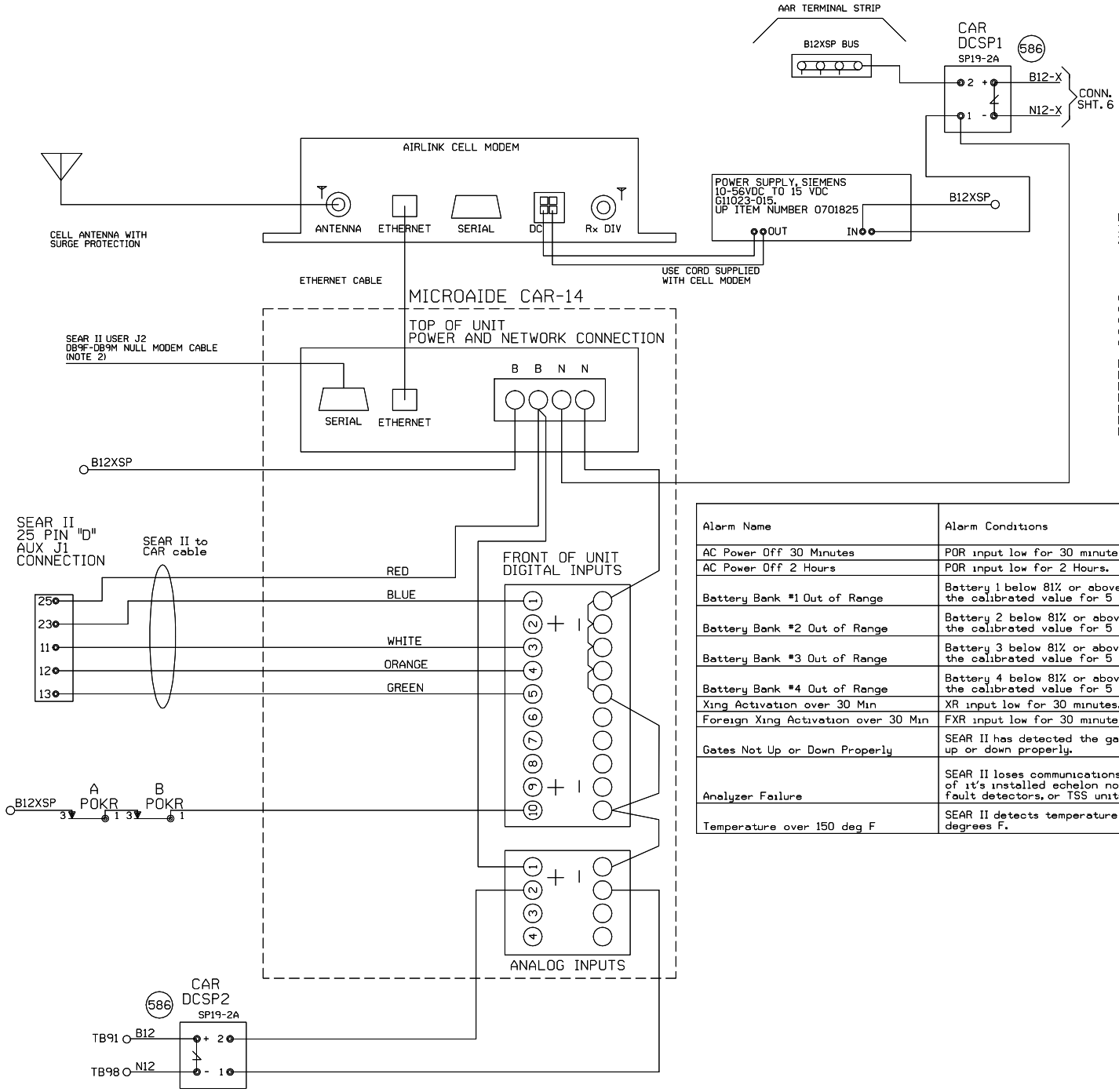

NOTE:
1) DO NOT JUMPER UNUSED INPUTS
2) THE CAR14 SERIAL PORT IS AVAILABLE TO ADD REMOTE CONNECTIVITY TO EXISTING LOGGING EQUIPMENT. USE NULL MODEM CABLE WITH SHIELDING DISCONNECTED AT ONE OR BOTH SIDES.

ANALOG INPUTS:
A1) B12X BATTERY BANK
A2) B12 BATTERY BANK
A3) BATTERY BANK 3
A4) BATTERY BANK 4

DIGITAL INPUTS
D1) XR (BLUE WIRE)
D2) FOREIGN XR
D3) ANALYZER FAILURE (WHITE WIRE)
D4) HIGH TEMPERATURE (ORANGE WIRE)
D5) GATES NOT UP OR DOWN PROPERLY (GREEN WIRE)
D10) POWER OFF INDICATION

Alarm Name	Alarm Conditions	Alarm Clearing Conditions	Cleared by Maintainer Mode?
AC Power Off 30 Minutes	POR input low for 30 minutes.	POR input high for 5 minutes.	No
AC Power Off 2 Hours	POR input low for 2 Hours.	POR input high for 5 minutes.	No
Battery Bank #1 Out of Range	Battery 1 below 81% or above 120% of the calibrated value for 5 minutes.	Battery 1 within acceptable range for 5 minutes.	No
Battery Bank #2 Out of Range	Battery 2 below 81% or above 120% of the calibrated value for 5 minutes.	Battery 2 within acceptable range for 5 minutes.	No
Battery Bank #3 Out of Range	Battery 3 below 81% or above 120% of the calibrated value for 5 minutes.	Battery 3 within acceptable range for 5 minutes.	No
Battery Bank #4 Out of Range	Battery 4 below 81% or above 120% of the calibrated value for 5 minutes.	Battery 4 within acceptable range for 5 minutes.	No
Xing Activation over 30 Min	XR input low for 30 minutes.	XR input high for 10 seconds.	Yes
Foreign Xing Activation over 30 Min	FXR input low for 30 minutes.	FXR input high for 10 seconds.	Yes
Gates Not Up or Down Properly	SEAR II has detected the gates are not up or down properly.	SEAR II has detected the gates are up or down properly.	No
Analyzer Failure	SEAR II loses communications with any of it's installed echelon nodes, ground fault detectors, or TSS units.	SEAR II has recovered after an analyzer failure alarm.	No
Temperature over 150 deg F	SEAR II detects temperature over 150 degrees F.	SEAR II sensor detects temperature is OK after a High-Temp alarm.	No

NEW SHEET

Designed: 03/08/13
NAGLE CORRIDOR PROJECT. REPLACE DC CIRCUITS W/ CWT FROM M.P. 9.68 TO M.P. 12.45
Rec#: 151 WO#: 11289 DLD/JPW / /PRS/JTB

MODIFICATION LEVEL	
Q. A. LAST LEVEL CHECKED	DU
LAST LEVEL MOD THIS TYPICAL	DU
LAST LEVEL BY DESIGNER	DU
CHANGED FROM TYPICAL?	Y

REV 01.24.11 4K ACDCCAR14SII.3

CIRCUIT MODIFICATIONS ARE NOT TO BE MADE WITHOUT AUTHORITY FROM THE OFFICE OF SIGNAL DESIGN

Date: 03/08/13
Des: PRS
Chk: DLD/JPW
AFE: 11289

UNION PACIFIC RAILROAD
CHICAGO, ILLINOIS
SAYRE AVENUE
HARVARD SUBDIVISION
Office of Sr AVP Engineering - Signal/TCO Omaha, Nebraska

Sh.: 2A
DOT 173892D
MP: 11.29
ID: HAR1129.2AX

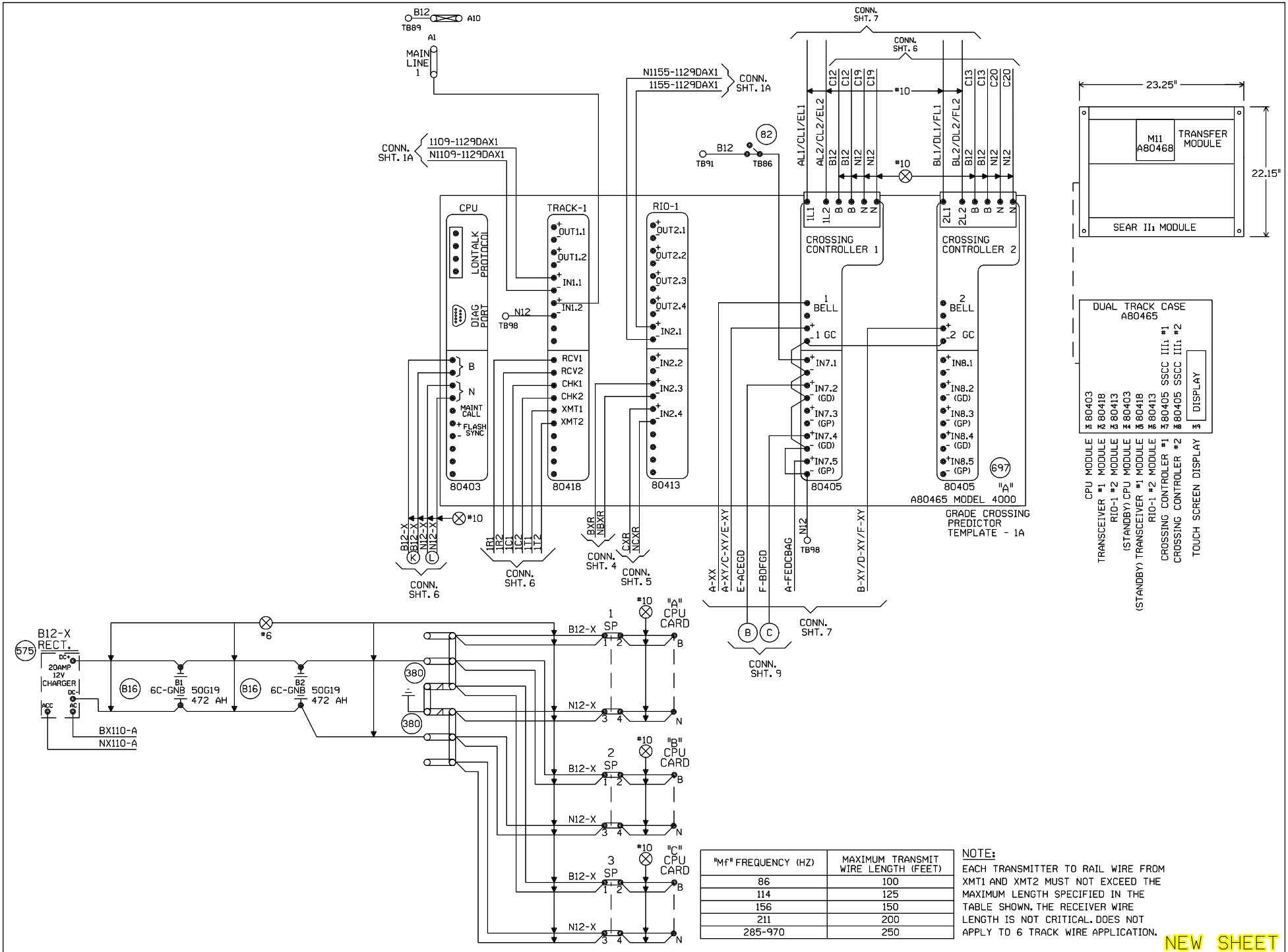

"Mf" FREQUENCY (HZ)	MAXIMUM TRANSMIT WIRE LENGTH (FEET)
86	100
114	125
156	150
211	200
285-970	250

NOTE:
EACH TRANSMITTER TO RAIL WIRE FROM XMT1 AND XMT2 MUST NOT EXCEED THE MAXIMUM LENGTH SPECIFIED IN THE TABLE SHOWN. THE RECEIVER WIRE LENGTH IS NOT CRITICAL. DOES NOT APPLY TO 6 TRACK WIRE APPLICATION.

NEW SHEET

Designed: 03/08/13
NAGLE CORRIDOR PROJECT. REPLACE DC CIRCUITS W/ CWT FROM M.P. 9.68 TO M.P. 12.45
Rec#: 151 WO#: 11289 DLD/JPW /PRS/JTB

MODIFICATION LEVEL	
Q. A. LAST LEVEL CHECKED	DU
LAST LEVEL MOD THIS TYPICAL	DU
LAST LEVEL BY DESIGNER	DU
CHANGED FROM TYPICAL?	Y

REV 01.24.11 4K 2TKGF.3

CIRCUIT MODIFICATIONS ARE NOT TO BE MADE WITHOUT AUTHORITY FROM THE OFFICE OF SIGNAL DESIGN

Date: 03/08/13
Des: PRS
Chk: DLD/JPW
AFE: 11289

UNION PACIFIC RAILROAD
CHICAGO, ILLINOIS
SAYRE AVENUE
HARVARD SUBDIVISION
Office of Sr AVP Engineering - Signal/TCO Omaha, Nebraska

Sh.: 3
DOT 173892D
MP: 11.29
ID: HAR1129.3X

Minimum Program Steps Report

Location and SIN

DOT Number: 173892D
Milepost Number: M.P. 11.29
Site Name: CHICAGO, ILLINOIS

SIN: 762010010016 *

* Parameter is part of office check number calculation.

MCF and Template Selection

MCF Name: GCP-T6X-02-4.mcf
MCF Revision: 24
MCFCRC: 09FC363B

Template = 1A:6 Trk Bi (OCCN) *

* Parameter is part of office check number calculation.

Minimum Program Steps

TEMPLATE: module configuration
Track 2/RIO 1 Slot = RIO (OCCN) *

TEMPLATE: track 1-Bi, Island
Track 1 : GCP Frequency = 643 Hz (Field,TCN)
Track 1 : Approach Distance = 1306 ft (Set in Field,TCN)
Track 1 : Prime Warning Time = 27 sec (OCCN) *
Track 1 : Prime UAX = IP (OCCN) *
Track 1 : Prime UAX Pickup = 15 sec (OCCN) *
Track 1 : GCP Transmit Level = Medium (Set in Field,TCN)
Track 1 : Isl Frequency = 15.2 kHz (Set in Field)

TEMPLATE: AND 1 XR
AND 1 Enable Used = Yes (OCCN) *

TEMPLATE: SSCC
SSCC 1 : Lamp Neutral Test = Off (Set in Field)
SSCC 2 : Lamp Neutral Test = Off (Set in Field)

TEMPLATE: OOS
OOS Control = OOS IPs (OCCN) *

TEMPLATE: IP assignment 1
IN 1.1 = T1 Prime UAX (OCCN) *
IN 1.2 = Out Of Service IP 1 (OCCN) *
IN 2.1 = T1 Prime UAX (OCCN) *
IN 2.3 = AND 1 XR Enable (OCCN) *
IN 2.4 = AND 1 XR Enable (OCCN) *

TEMPLATE: IP assignment SSCC
IN 7.1 = AND 1 XR Enable (OCCN) *

GCP: track 1
Track 1 : GCP Freq Category = Offset (Set in Field)
Track 1 : Island Distance = 186 ft (Set in Field,TCN)

ADVANCED: site options
Daylight Savings = On (Set in Field)

* Parameter is part of office check number calculation.

Check Numbers

Office Check Number: 67D8D6BF
Config. Check Number: 44FBE0EC
(Based on MCF Revision 24)

Parameters not part of office check number calculation:

Track 1 : GCP Frequency = 643 Hz
Track 1 : Approach Distance = 1306 ft (Set in Field)
Track 1 : GCP Transmit Level = Medium (Set in Field)
Track 1 : Isl Frequency = 15.2 kHz
SSCC 1 : Lamp Neutral Test = Off (Set in Field)
SSCC 2 : Lamp Neutral Test = Off (Set in Field)
Track 1 : GCP Freq Category = Offset (Set in Field)
Track 1 : Island Distance = 186 ft (Set in Field)
Daylight Savings = On (Set in Field)

Comments

<none>

Configuration Package File

Filename: HAR1129_173892D_A.pac
Path: H:\01-Xing\up110143\GCP Programs\M.P. 11.29\
Date/Time: 10/26/2012 19:16:52

NEW SHEET

				Designed: 03/08/13 NAGLE CORRIDOR PROJECT. REPLACE DC CIRCUITS W/ CWT FROM M.P. 9.68 TO M.P. 12.45 Rec*: WO#: 11289 IS: DLD/JPW / /PRS/JTB	NOTE: Actual OFFSET and ISLAND distances must be verified by field personnel.	CIRCUIT MODIFICATIONS ARE NOT TO BE MADE WITHOUT AUTHORITY FROM THE OFFICE OF SIGNAL DESIGN	Date: 03/08/13 Des: PRS Chk: DLD/JPW AFE: 11289	UNION PACIFIC RAILROAD CHICAGO, ILLINOIS SAYRE AVENUE HARVARD SUBDIVISION Office of Sr AVP Engineering - Signal/TCO Omaha, Nebraska	Sh.: 3A DOT 173892D MP: 11.29 ID: HAR1129.3AX

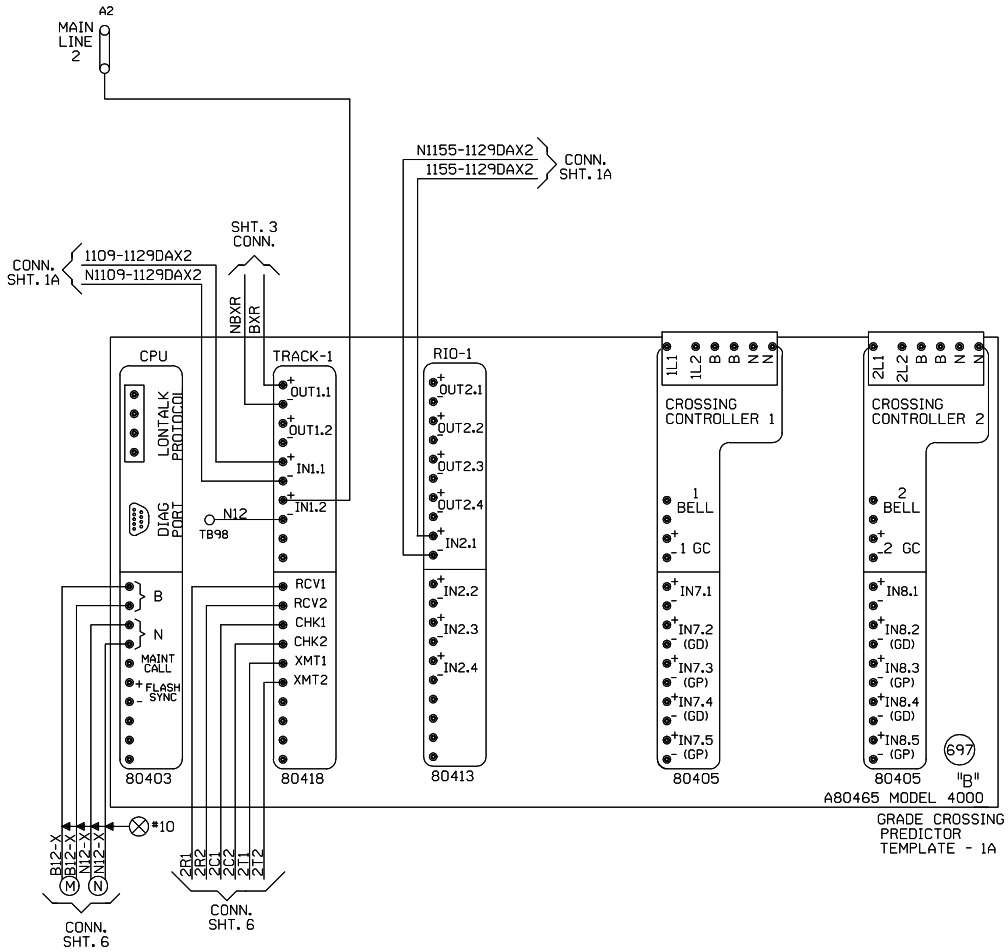

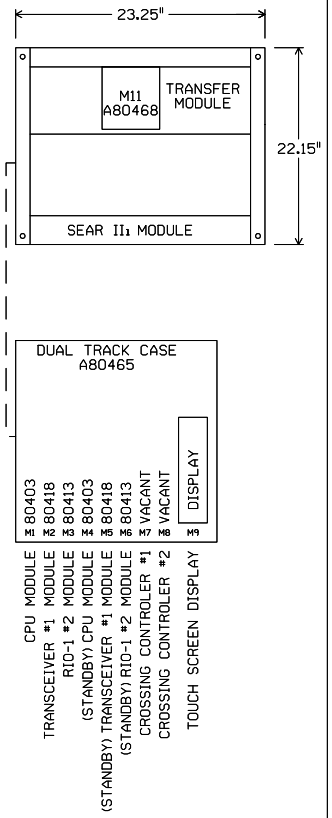

"Mf" FREQUENCY (HZ)	MAXIMUM TRANSMIT WIRE LENGTH (FEET)
86	100
114	125
156	150
211	200
285-970	250

NOTE:
EACH TRANSMITTER TO RAIL WIRE FROM XMT1 AND XMT2 MUST NOT EXCEED THE MAXIMUM LENGTH SPECIFIED IN THE TABLE SHOWN. THE RECEIVER WIRE LENGTH IS NOT CRITICAL. DOES NOT APPLY TO 6 TRACK WIRE APPLICATION.

NEW SHEET

Designed: 03/08/13
NAGLE CORRIDOR PROJECT. REPLACE DC CIRCUITS W/ CWT FROM M.P. 9.68 TO M.P. 12.45
Rec#: 154 WO#: 11289 DLD/JPW /PRS/JTB

MODIFICATION LEVEL	
Q. A. LAST LEVEL CHECKED	DU
LAST LEVEL MOD THIS TYPICAL	DU
LAST LEVEL BY DESIGNER	DU
CHANGED FROM TYPICAL?	Y

REV 01.24.11 4K 2TKGF.3

CIRCUIT MODIFICATIONS ARE NOT TO BE MADE WITHOUT AUTHORITY FROM THE OFFICE OF SIGNAL DESIGN

Date: 03/08/13
Des: PRS
Chk: DLD/JPW
AFE: 11289

UNION PACIFIC RAILROAD
CHICAGO, ILLINOIS
SAYRE AVENUE
HARVARD SUBDIVISION
Office of Sr AVP Engineering - Signal/TCO Omaha, Nebraska

Sh.: 4
DOT 173892D
MP: 11.29
ID: HAR1129.4X