Minimum Program Steps Report

Location and SIN

DOT Number: 173891W
Milepost Number: M.P. 11.09
Site Name: CHICAGO, ILLINOIS

SIN: 762010010016 *

* Parameter is part of office check number calculation.

MCF and Template Selection

MCF Name: GCP-T6X-02-4.mcf
MCF Revision: 24
MCFCRC: 09FC363B

Template = 1D:3 Uni pairs (OCCN) *

* Parameter is part of office check number calculation.

Minimum Program Steps

TEMPLATE: module configuration
Track 5/RIO 2 Slot = RIO (OCCN) *
SSCC 1 Slot = Not Used (OCCN) *
SSCC 2 Slot = Not Used (OCCN) *

TEMPLATE: track 1-Uni, Island
Track 1 : GCP Frequency = 431 Hz (Field,TCN)
Track 1 : Approach Distance = 2480 ft (Set in Field,TCN)
Track 1 : Prime Warning Time = 41 sec (OCCN) *
Track 1 : Prime UAX = IP (OCCN) *
Track 1 : Prime UAX Pickup = 15 sec (OCCN) *
Track 1 : GCP Transmit Level = Medium (Set in Field,TCN)
Track 1 : Uni/Bi/Sim-Bidirnl = Sim. Bidirnl (OCCN) *
Track 1 : Isl Frequency = 4.9 kHz (Set in Field)
Track 1 : Island Distance = 157 ft (Set in Field,TCN)

TEMPLATE: track 1 Daxes
Track 1 : Dax A Used = Yes (OCCN) *
Track 1 : Dax A Warning Time = 48 sec (OCCN) *
Track 1 : Dax A Offset Distance = 4040 ft (Set in Field)
Track 1 : Dax B Used = Yes (OCCN) *
Track 1 : Dax B Warning Time = 55 sec (OCCN) *
Track 1 : Dax B Offset Distance = 5411 ft (Set in Field)

TEMPLATE: track 2-Uni,No Island
Track 2 : GCP Frequency = 286 Hz (Field,TCN)
Track 2 : Approach Distance = 2628 ft (Set in Field,TCN)
Track 2 : Prime Warning Time = 41 sec (OCCN) *
Track 2 : Prime UAX = IP (OCCN) *
Track 2 : Prime UAX Pickup = 15 sec (OCCN) *
Track 2 : GCP Transmit Level = Medium (Set in Field,TCN)
Track 2 : Uni/Bi/Sim-Bidirnl = Sim. Bidirnl (OCCN) *

TEMPLATE: track 2 Daxes
Track 2 : Dax A Used = Yes (OCCN) *
Track 2 : Dax A Warning Time = 27 sec (OCCN) *
Track 2 : Dax A Offset Distance = 1145 ft (Set in Field)
Track 2 : Dax B Used = Yes (OCCN) *
Track 2 : Dax B Warning Time = 54 sec (OCCN) *
Track 2 : Dax B Offset Distance = 2434 ft (Set in Field)
Track 2 : Dax C Used = Yes (OCCN) *
Track 2 : Dax C Warning Time = 54 sec (OCCN) *
Track 2 : Dax C Offset Distance = 3173 ft (Set in Field)

TEMPLATE: track Anding
AND 2 Used = Yes (OCCN) *
AND 3 Used = Yes (OCCN) *

TEMPLATE: AND 2
AND 2 Track 2 = Dax B (OCCN) *
AND 2 Enable Used = Yes (OCCN) *

TEMPLATE: AND 3
AND 3 Track 2 = Dax C (OCCN) *
AND 3 Enable Used = Yes (OCCN) *

TEMPLATE: OOS
OOS Control = OOS IPs (OCCN) *
T2 OOS Control = OOS Input 1 (OCCN) *

TEMPLATE: OP assignment 1
OUT 1.1 = T1 Dax A (OCCN) *
OUT 2.1 = T2 Dax A (OCCN) *
OUT 2.2 = AND 2 (OCCN) *

TEMPLATE: OP assignment 2
OUT 5.1 = T1 Dax B (OCCN) *
OUT 5.2 = AND 3 (OCCN) *
OUT 5.3 = AND 1 XR (OCCN) *

TEMPLATE: IP assignment 1
IN 1.2 = Out Of Service IP 1 (OCCN) *
IN 2.1 = T2 Prime UAX (OCCN) *
IN 2.2 = AND 2 Enable (OCCN) *

TEMPLATE: IP assignment 2
IN 5.1 = T1 Prime UAX (OCCN) *
IN 5.2 = AND 3 Enable (OCCN) *

GCP: track 1
Track 1 : GCP Freq Category = Offset (Set in Field)

GCP: track 2
Track 2 : GCP Freq Category = Offset (Set in Field)

ADVANCED: site options
Daylight Savings = On (Set in Field)

* Parameter is part of office check number calculation.

Check Numbers

Office Check Number: 0C0007A1
Config. Check Number: 71ABCDAF
(Based on MCF Revision 24)

Parameters not part of office check number calculation:

Track 1 : GCP Frequency = 431 Hz
Track 1 : Approach Distance = 2480 ft (Set in Field)
Track 1 : GCP Transmit Level = Medium (Set in Field)
Track 1 : Isl Frequency = 4.9 kHz
Track 1 : Island Distance = 157 ft (Set in Field)
Track 1 : Dax A Offset Distance = 4040 ft (Set in Field)
Track 1 : Dax B Offset Distance = 5411 ft (Set in Field)
Track 2 : GCP Frequency = 286 Hz
Track 2 : Approach Distance = 2628 ft (Set in Field)
Track 2 : GCP Transmit Level = Medium (Set in Field)
Track 2 : Dax A Offset Distance = 1145 ft (Set in Field)
Track 2 : Dax B Offset Distance = 2434 ft (Set in Field)
Track 2 : Dax C Offset Distance = 3173 ft (Set in Field)
Track 1 : GCP Freq Category = Offset (Set in Field)
Track 2 : GCP Freq Category = Offset (Set in Field)
Daylight Savings = On (Set in Field)

Comments

<none>

Configuration Package File

Filename: HAR1109_173891W_C.pac
Path: H:\01-Xing\up110143\GCP Programs\M.P. 11.09\
Date/Time: 11/03/2012 8:35:35

NEW SHEET

Designed: 03/08/13
NAGLE CORRIDOR PROJECT. REPLACE DC CIRCUITS W/ CWT FROM M.P. 9.68 TO M.P. 12.45
Rec*: WO#: 11289
IS: DLD/JPW
/ /PRS/JTB

NOTE: Actual OFFSET and ISLAND distances must be verified by field personnel.

CIRCUIT MODIFICATIONS ARE NOT TO BE MADE WITHOUT AUTHORITY FROM THE OFFICE OF SIGNAL DESIGN

Date: 03/08/13	UNION PACIFIC RAILROAD	Sh.: 5A	
Des: PRS	CHICAGO, ILLINOIS RAVEN AVENUE HARVARD SUBDIVISION	DOT 173891W	
Chk: DLD/JPW		MP: 11.09	
AFE: 11289	Office of Sr AVP Engineering - Signal/TCO Omaha, Nebraska	ID: HAR1109.5AX	

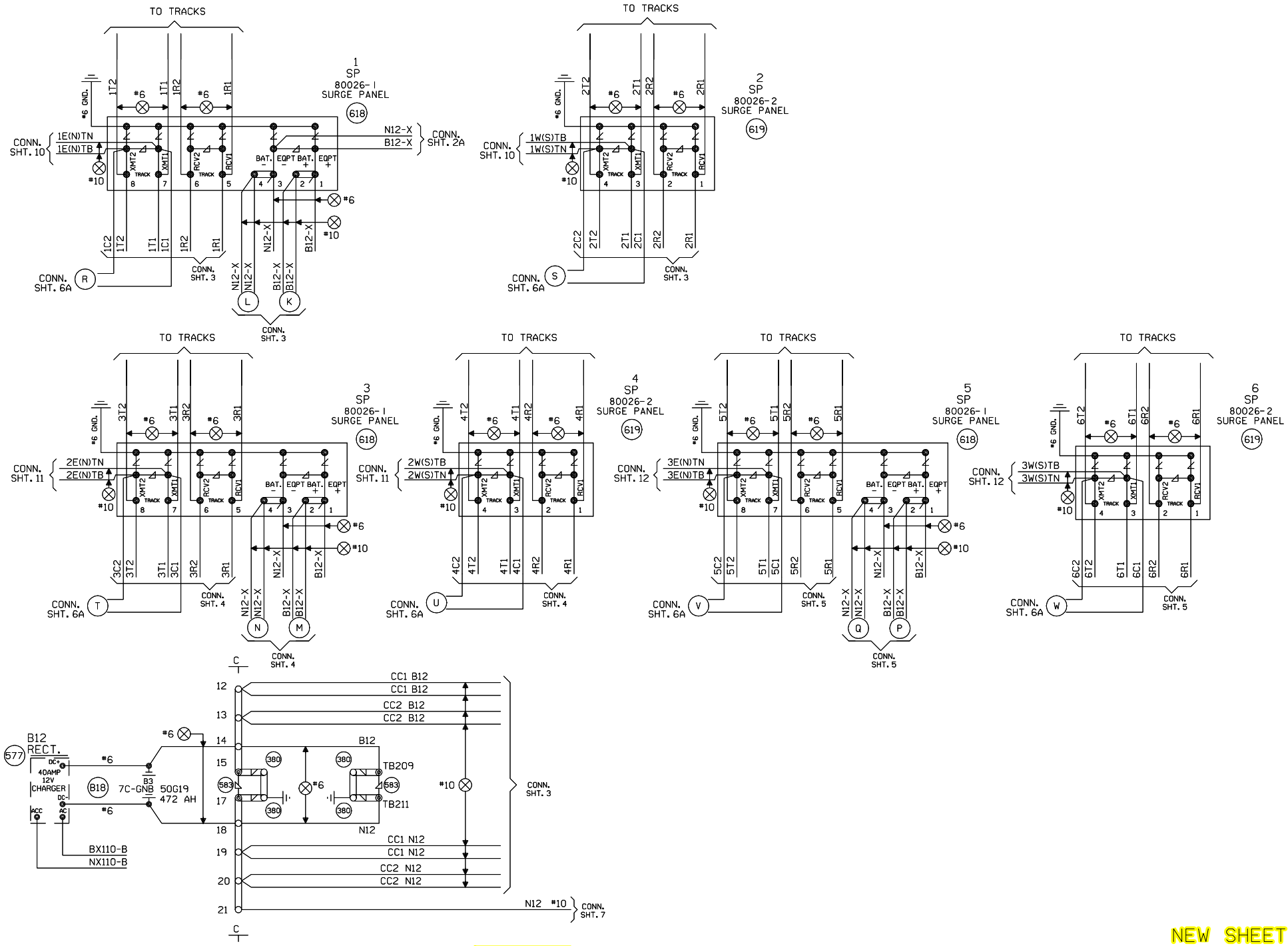

NEW SHEET

Designed: 03/08/13
NAGLE CORRIDOR PROJECT. REPLACE DC CIRCUITS W/ CWT FROM M.P. 9.68 TO M.P. 12.45
Rec#: WO#: 11289
IS: DLD/JPW
/ /PRS/JTB

MODIFICATION LEVEL	
Q. A. LAST LEVEL CHECKED	DU
LAST LEVEL MOD THIS TYPICAL	DU
LAST LEVEL BY DESIGNER	DU
CHANGED FROM TYPICAL?	Y

REV 01.24.11 4K 4TKSPGFC.4

CIRCUIT MODIFICATIONS ARE NOT TO BE MADE WITHOUT AUTHORITY FROM THE OFFICE OF SIGNAL DESIGN

Date: 03/08/13
Des: PRS
Chk: DLD/JPW
AFE: 11289

UNION PACIFIC RAILROAD

CHICAGO, ILLINOIS
RAVEN AVENUE
HARVARD SUBDIVISION

Office of Sr AVP Engineering - Signal/TCO Omaha, Nebraska

Sh.: 6
DOT 173891W
MP: 11.09
ID: HAR1109.6X