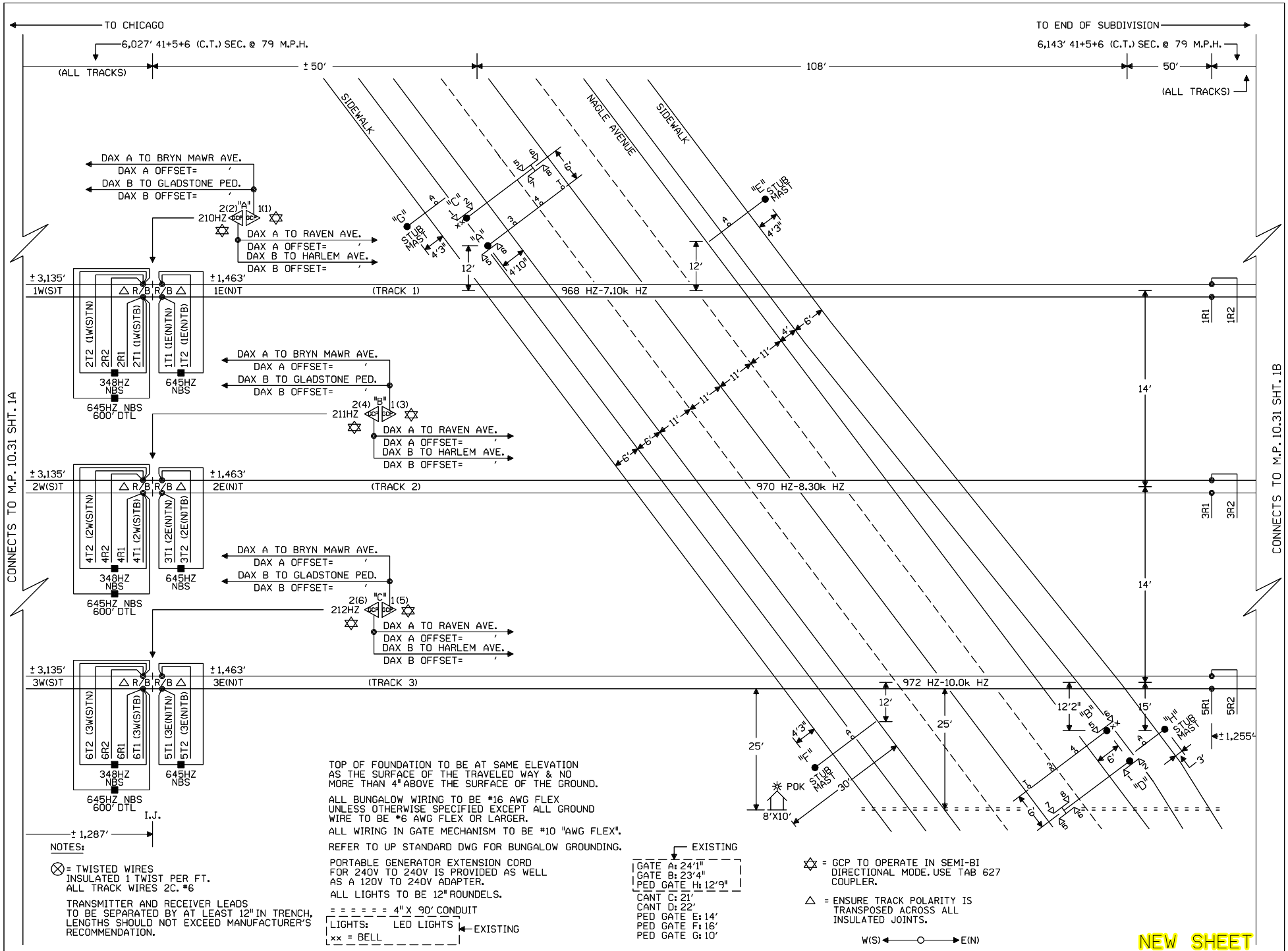

NOTES:

⊗ = TWISTED WIRES INSULATED 1 TWIST PER FT. ALL TRACK WIRES 2C. #6

TRANSMITTER AND RECEIVER LEADS TO BE SEPARATED BY AT LEAST 12" IN TRENCH. LENGTHS SHOULD NOT EXCEED MANUFACTURER'S RECOMMENDATION.

TOP OF FOUNDATION TO BE AT SAME ELEVATION AS THE SURFACE OF THE TRAVELED WAY & NO MORE THAN 4" ABOVE THE SURFACE OF THE GROUND.

ALL BUNGALOW WIRING TO BE #16 AWG FLEX UNLESS OTHERWISE SPECIFIED EXCEPT ALL GROUND WIRE TO BE #6 AWG FLEX OR LARGER.

ALL WIRING IN GATE MECHANISM TO BE #10 "AWG FLEX".

REFER TO UP STANDARD DWG FOR BUNGALOW GROUNDING.

PORTABLE GENERATOR EXTENSION CORD FOR 240V TO 240V IS PROVIDED AS WELL AS A 120V TO 240V ADAPTER.

ALL LIGHTS TO BE 12" ROUNDELS.

= = = = = = 4" X 90' CONDUIT

LIGHTS: LED LIGHTS ← EXISTING
xx = BELL

EXISTING
GATE A: 24'1"
GATE B: 23'4"
PED GATE H: 12'9"

CANT C: 21'
CANT D: 22'
PED GATE E: 14'
PED GATE F: 16'
PED GATE G: 10'

✡ = GCP TO OPERATE IN SEMI-BI DIRECTIONAL MODE. USE TAB 627 COUPLER.

△ = ENSURE TRACK POLARITY IS TRANSPOSED ACROSS ALL INSULATED JOINTS.

W(S) ← ○ → E(N)

NEW SHEET

Designed: 03/08/13
NAGLE CORRIDOR PROJECT. REPLACE DC CIRCUITS W/ CWT FROM M.P. 9.68 TO M.P. 12.45
Rec#: WO#: 11289
ISs: DLD/JPW
/ /PRS/JTB

MODIFICATION LEVEL	
Q. A. LAST LEVEL CHECKED	DU
LAST LEVEL MOD THIS TYPICAL	DU
LAST LEVEL BY DESIGNER	DU
CHANGED FROM TYPICAL?	Y

REV 01.24.11 4K 2TUCGTYP.1

CIRCUIT MODIFICATIONS ARE NOT TO BE MADE WITHOUT AUTHORITY FROM THE OFFICE OF SIGNAL DESIGN

Date: 03/08/13
Des: PRS
Chk: DLD/JPW
AFE: 11289

UNION PACIFIC RAILROAD

CHICAGO, ILLINOIS
NAGLE AVENUE
HARVARD SUBDIVISION

Office of Sr AVP Engineering - Signal/TCO Omaha, Nebraska

Sh.: 1
DOT 173887G
MP: 10.31
ID: HAR1031.1X

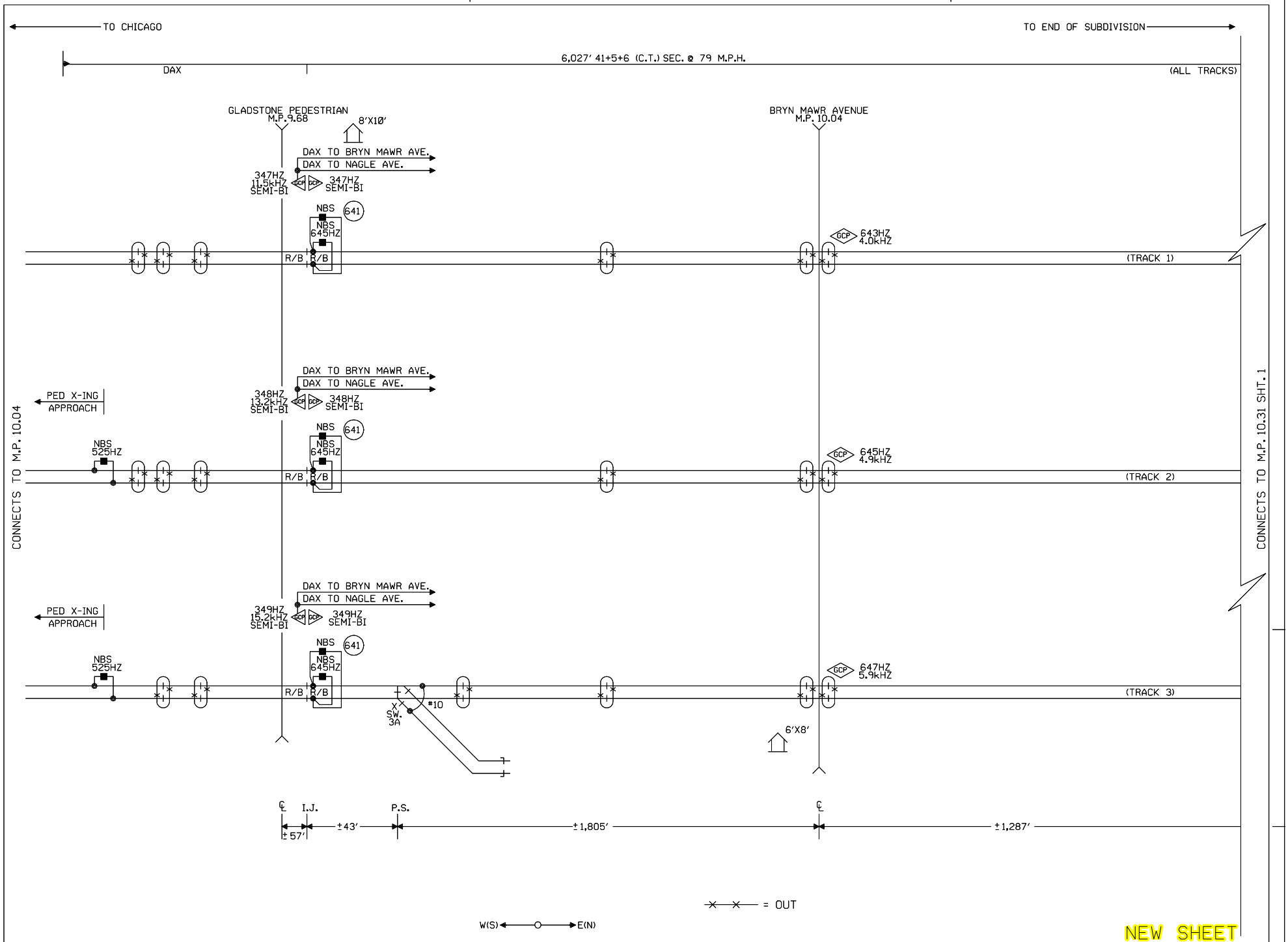

Designed: 03/08/13
NAGLE CORRIDOR
PROJECT. REPLACE DC
CIRCUITS W/ CWT FROM
M.P. 9.68 TO
M.P. 12.45
Rec#: WO#: 11289
IS: DLD/JPW
/ /PRS/JTB

MODIFICATION LEVEL	
Q. A. LAST LEVEL CHECKED	DU
LAST LEVEL MOD THIS TYPICAL	DU
LAST LEVEL BY DESIGNER	DU
CHANGED FROM TYPICAL?	Y

REV 01.24.11 4K 2TUCGTYP.1

CIRCUIT MODIFICATIONS ARE NOT TO BE MADE WITHOUT AUTHORITY FROM THE OFFICE OF SIGNAL DESIGN

Date:	03/08/13
Des:	PRS
Chk:	DLD/JPW
AFE:	11289

UNION PACIFIC RAILROAD

CHICAGO, ILLINOIS
NAGLE AVENUE
HARVARD SUBDIVISION

Office of Sr AVP Engineering - Signal/TCO Omaha, Nebraska

Sh.:	1A
DOT	173887G
MP:	10.31
ID:	HAR1031.1AX

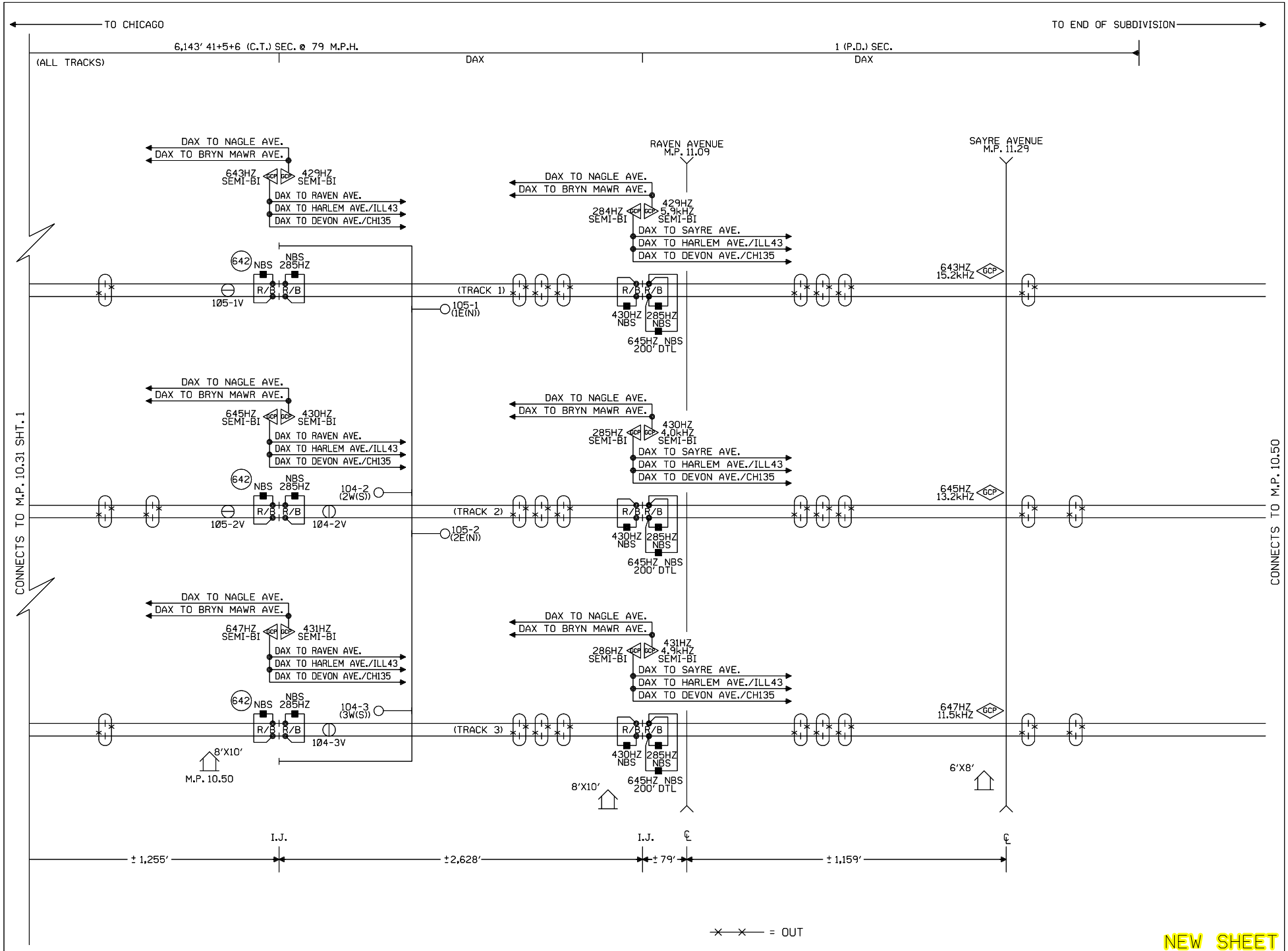

NEW SHEET

Designed: 03/08/13 NAGLE CORRIDOR PROJECT. REPLACE DC CIRCUITS W/ CWT FROM M.P. 9.68 TO M.P. 12.45 Rec#: WO#: 11289 IS: DLD/JPW / /PRS/JTB	MODIFICATION LEVEL		CIRCUIT MODIFICATIONS ARE NOT TO BE MADE WITHOUT AUTHORITY FROM THE OFFICE OF SIGNAL DESIGN	Date: 03/08/13	UNION PACIFIC RAILROAD	Sh.: 1B
	Q. A. LAST LEVEL CHECKED	DU		Des: PRS	CHICAGO, ILLINOIS	DOT 173887G
	LAST LEVEL MOD THIS TYPICAL	DU		Chk: DLD/JPW	NAGLE AVENUE	MP: 10.31
	LAST LEVEL BY DESIGNER	DU		AFE: 11289	HARVARD SUBDIVISION	ID: HAR1031.1BX
	CHANGED FROM TYPICAL?	Y			Office of Sr AVP Engineering - Signal/TCO Omaha, Nebraska	
	REV 01.24.11 4K 2TUCGTYP.1					

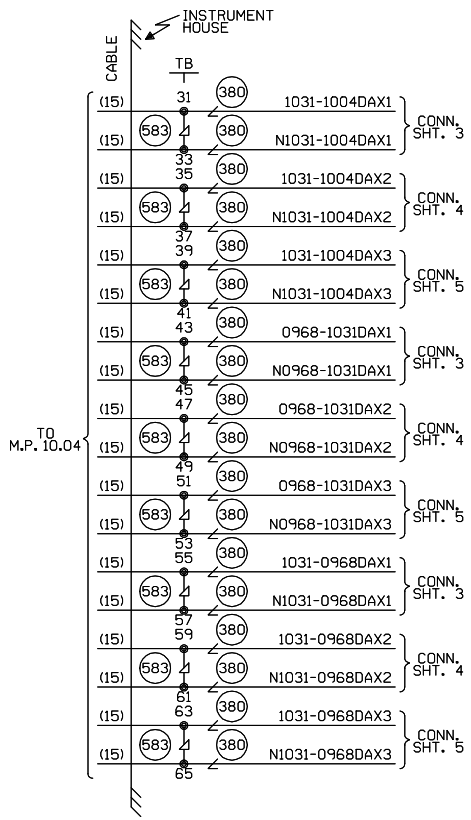

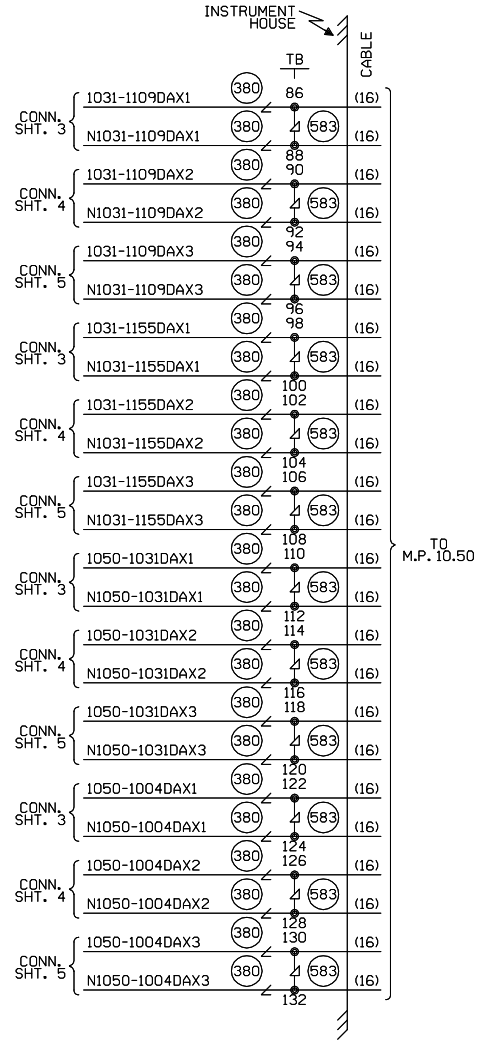

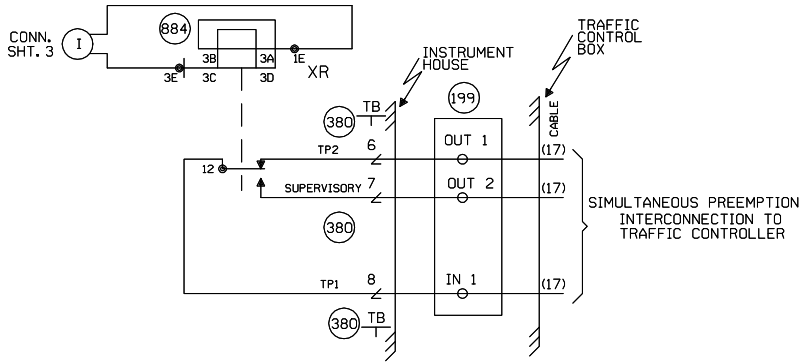

CONSTRUCTION NOTES:

1. PTMW BUNGALOW 8'X10' (P/N: 520-2721). ORDER TIB BOX (TAB 199).
2. REUSE EXISTING GATES "A" & "B", AND PED GATE "H".
3. CANTS "C" & "D" AND PED GATES "E", "F", & "G" ARE NEW.
4. REUSE INSULATED JOINTS APPROXIMATELY 50' FROM EDGE OF SIDEWALK.

CABLE TABULATION

CABLE NO. 15 19C#14 U.G.B.T. HOUSE TO M.P. 10.04.
CABLE NO. 16 (2)-12C#14 U.G.B.T. HOUSE TO M.P. 10.50.
CABLE NO. 17 U.G.B.T. HOUSE TO TRAFFIC CONTROLLER.

NEW SHEET

Designed: 03/08/13
NAGLE CORRIDOR PROJECT. REPLACE DC CIRCUITS W/ CWT FROM M.P. 9.68 TO M.P. 12.45
Rec#: WO#: 11289
IS: DLD/JPW
/ /PRS/JTB

MODIFICATION LEVEL	
Q. A. LAST LEVEL CHECKED	DU
LAST LEVEL MOD THIS TYPICAL	DU
LAST LEVEL BY DESIGNER	DU
CHANGED FROM TYPICAL?	Y

REV 01.24.11 4K 2TUCGTYP.1

CIRCUIT MODIFICATIONS ARE NOT TO BE MADE WITHOUT AUTHORITY FROM THE OFFICE OF SIGNAL DESIGN

Date: 03/08/13
Des: PRS
Chk: DLD/JPW
AFE: 11289

UNION PACIFIC RAILROAD
CHICAGO, ILLINOIS
NAGLE AVENUE
HARVARD SUBDIVISION
Office of Sr AVP Engineering - Signal/TCO Omaha, Nebraska

Sh.: 1C
DOT 173887G
MP: 10.31
ID: HAR1031.1CX

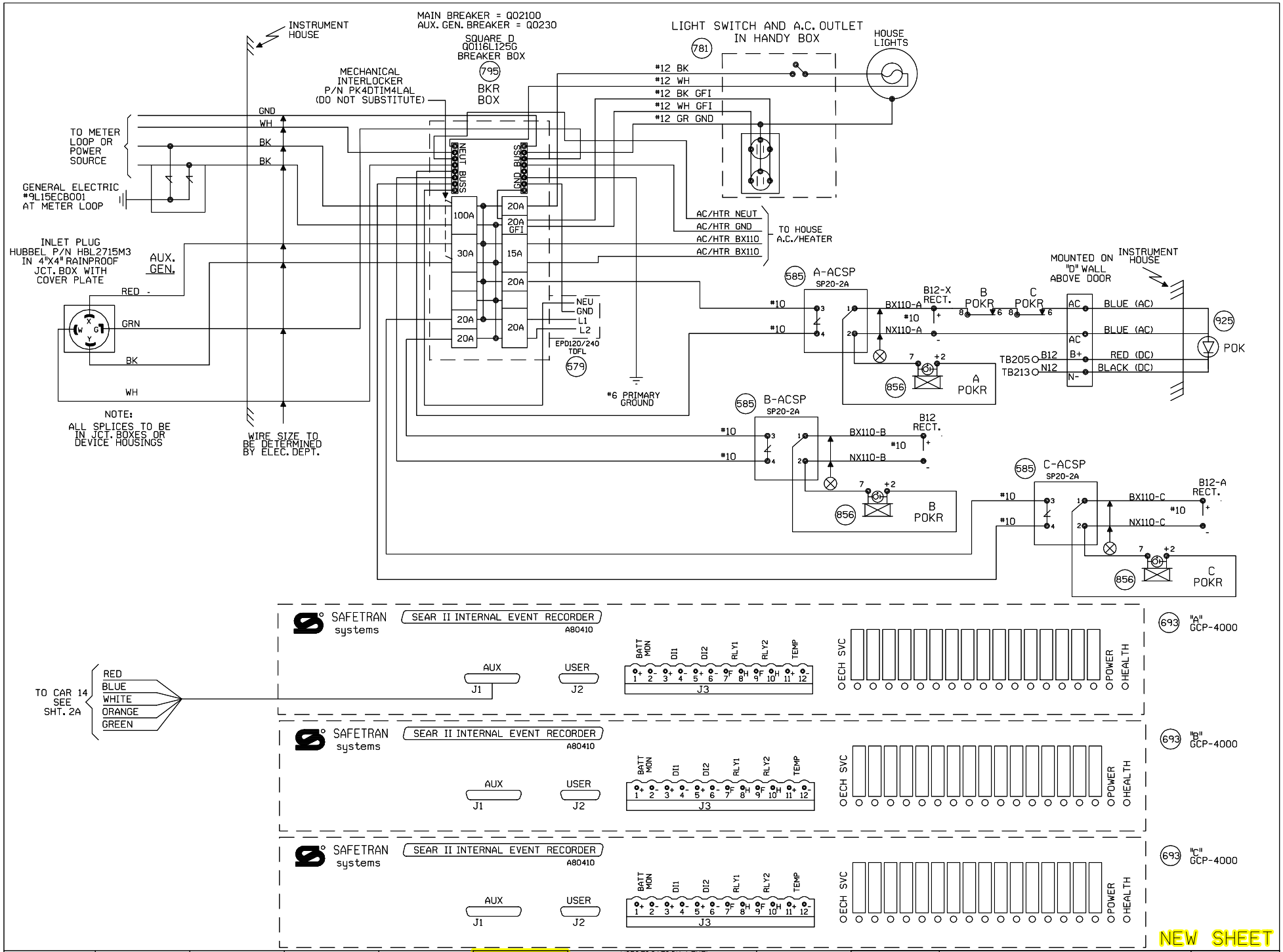

Designed: 03/08/13
NAGLE CORRIDOR PROJECT. REPLACE DC CIRCUITS W/ CWT FROM M.P. 9.68 TO M.P. 12.45
Rec#: WO#: 11289
IS: DLD/JPW
/ /PRS/JTB

MODIFICATION LEVEL	
Q. A. LAST LEVEL CHECKED	DU
LAST LEVEL MOD THIS TYPICAL	DU
LAST LEVEL BY DESIGNER	DU
CHANGED FROM TYPICAL?	Y

REV 01.24.11 4K SEARAC.2

CIRCUIT MODIFICATIONS ARE NOT TO BE MADE WITHOUT AUTHORITY FROM THE OFFICE OF SIGNAL DESIGN

Date: 03/08/13
Des: PRS
Chk: DLD/JPW
AFE: 11289

UNION PACIFIC RAILROAD

CHICAGO, ILLINOIS
NAGLE AVENUE
HARVARD SUBDIVISION

Office of Sr AVP Engineering - Signal/TCO Omaha, Nebraska

Sh.: 2
DOT 173887G
MP: 10.31
ID: HAR1031.2X

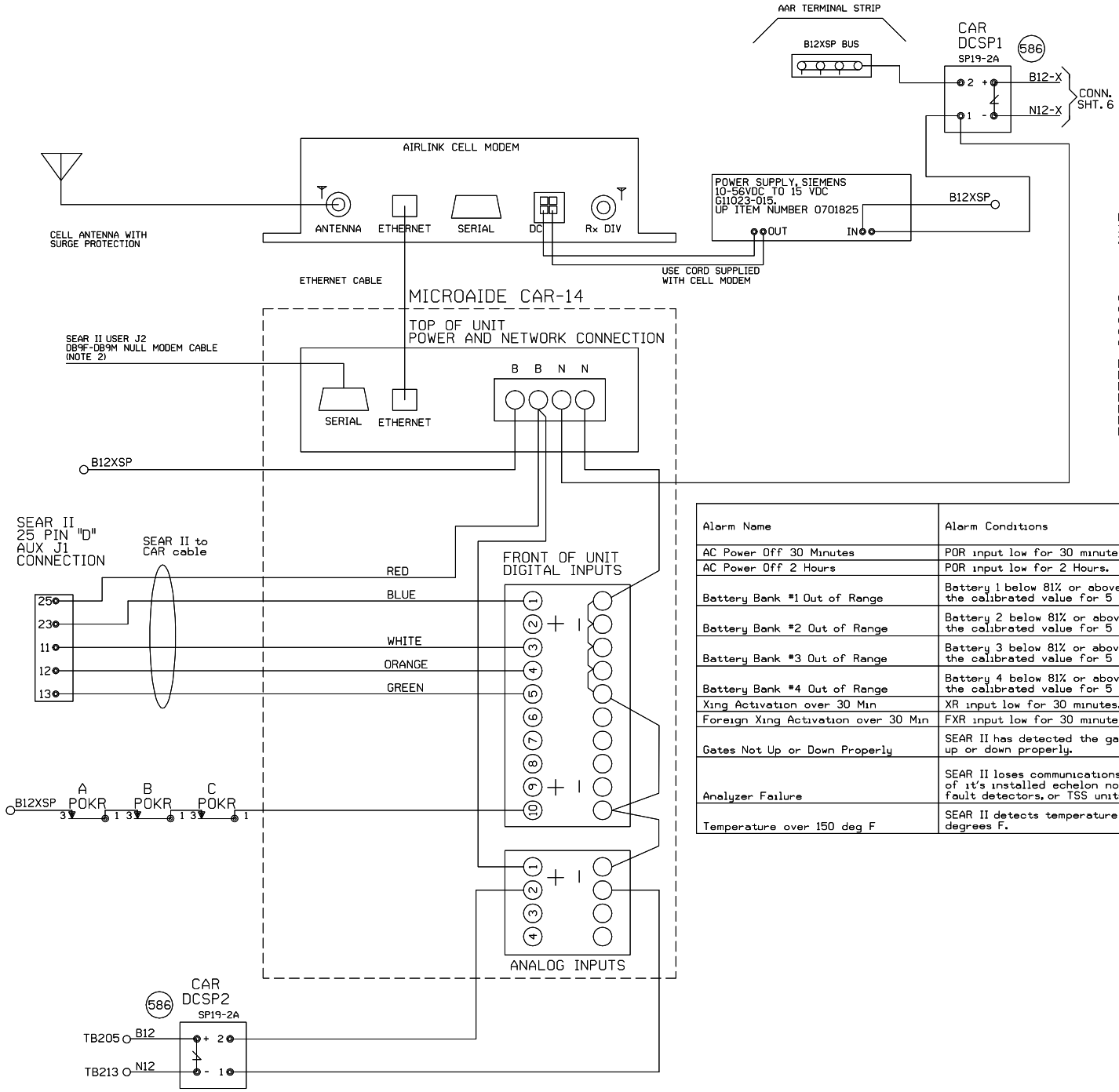

NOTE:
1) DO NOT JUMPER UNUSED INPUTS
2) THE CAR14 SERIAL PORT IS AVAILABLE TO ADD REMOTE CONNECTIVITY TO EXISTING LOGGING EQUIPMENT. USE NULL MODEM CABLE WITH SHIELDING DISCONNECTED AT ONE OR BOTH SIDES.

ANALOG INPUTS:
A1) B12X BATTERY BANK
A2) B12 BATTERY BANK
A3) BATTERY BANK 3
A4) BATTERY BANK 4

DIGITAL INPUTS
D1) XR (BLUE WIRE)
D2) FOREIGN XR
D3) ANALYZER FAILURE (WHITE WIRE)
D4) HIGH TEMPERATURE (ORANGE WIRE)
D5) GATES NOT UP OR DOWN PROPERLY (GREEN WIRE)
D10) POWER OFF INDICATION

Alarm Name	Alarm Conditions	Alarm Clearing Conditions	Cleared by Maintainer Mode?
AC Power Off 30 Minutes	POR input low for 30 minutes.	POR input high for 5 minutes.	No
AC Power Off 2 Hours	POR input low for 2 Hours.	POR input high for 5 minutes.	No
Battery Bank #1 Out of Range	Battery 1 below 81% or above 120% of the calibrated value for 5 minutes.	Battery 1 within acceptable range for 5 minutes.	No
Battery Bank #2 Out of Range	Battery 2 below 81% or above 120% of the calibrated value for 5 minutes.	Battery 2 within acceptable range for 5 minutes.	No
Battery Bank #3 Out of Range	Battery 3 below 81% or above 120% of the calibrated value for 5 minutes.	Battery 3 within acceptable range for 5 minutes.	No
Battery Bank #4 Out of Range	Battery 4 below 81% or above 120% of the calibrated value for 5 minutes.	Battery 4 within acceptable range for 5 minutes.	No
Xing Activation over 30 Min	XR input low for 30 minutes.	XR input high for 10 seconds.	Yes
Foreign Xing Activation over 30 Min	FXR input low for 30 minutes.	FXR input high for 10 seconds.	Yes
Gates Not Up or Down Properly	SEAR II has detected the gates are not up or down properly.	SEAR II has detected the gates are up or down properly.	No
Analyzer Failure	SEAR II loses communications with any of it's installed echelon nodes, ground fault detectors, or TSS units.	SEAR II has recovered after an analyzer failure alarm.	No
Temperature over 150 deg F	SEAR II detects temperature over 150 degrees F.	SEAR II sensor detects temperature is OK after a High-Temp alarm.	No

NEW SHEET

Designed: 03/08/13
NAGLE CORRIDOR PROJECT. REPLACE DC CIRCUITS W/ CWT FROM M.P. 9.68 TO M.P. 12.45
Rec#: 154 WO#: 11289 DLD/JPW /PRS/JTB

MODIFICATION LEVEL	
Q. A. LAST LEVEL CHECKED	DU
LAST LEVEL MOD THIS TYPICAL	DU
LAST LEVEL BY DESIGNER	DU
CHANGED FROM TYPICAL?	Y

REV 01.24.11 4K ACDCCAR14SII.3

CIRCUIT MODIFICATIONS ARE NOT TO BE MADE WITHOUT AUTHORITY FROM THE OFFICE OF SIGNAL DESIGN

Date: 03/08/13
Des: PRS
Chk: DLD/JPW
AFE: 11289

UNION PACIFIC RAILROAD
CHICAGO, ILLINOIS
NAGLE AVENUE
HARVARD SUBDIVISION
Office of Sr AVP Engineering - Signal/TCO Omaha, Nebraska

Sh.: 2A
DOT 173887G
MP: 10.31
ID: HAR1031.2AX

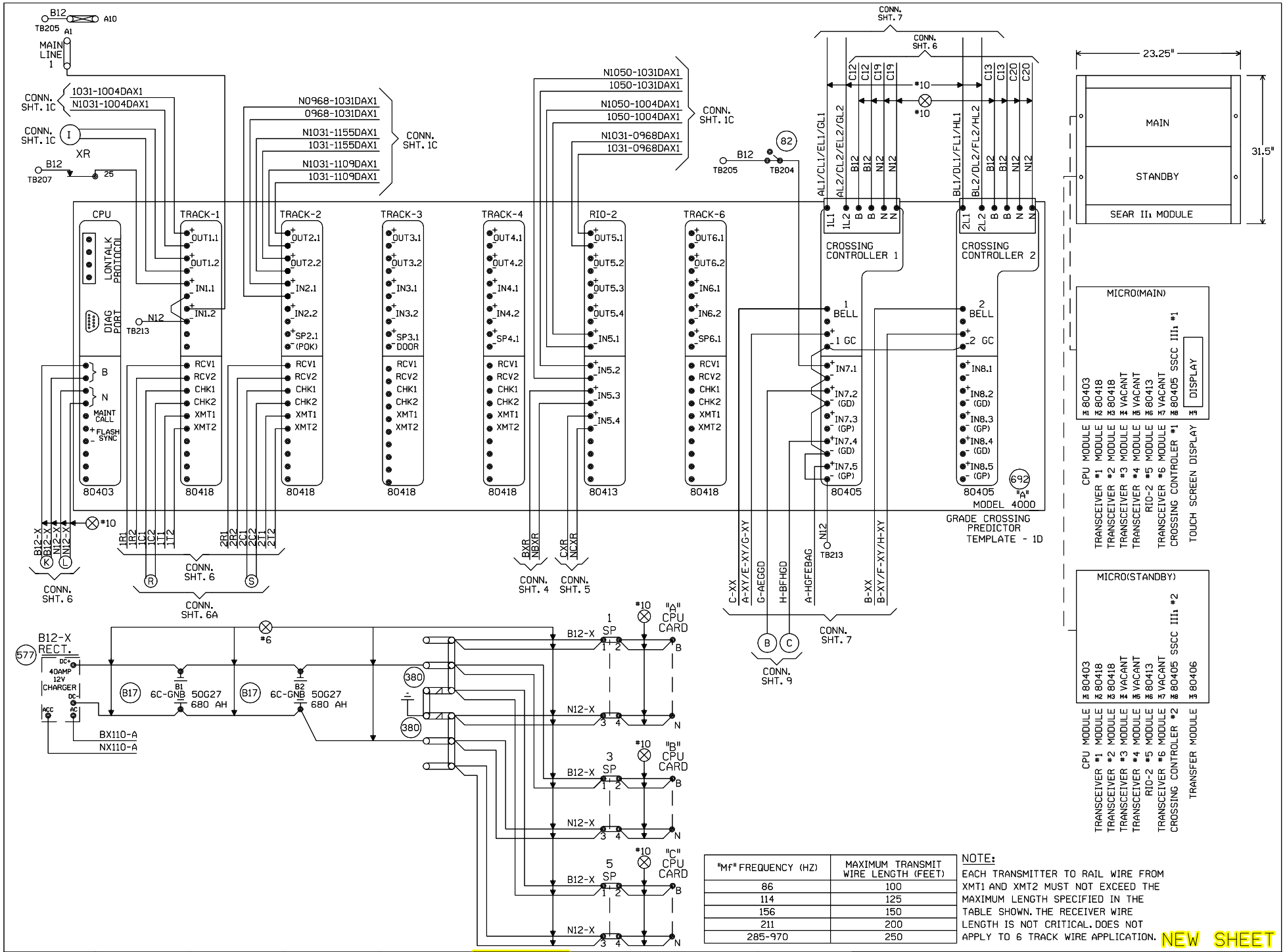

"Mf" FREQUENCY (HZ)	MAXIMUM TRANSMIT WIRE LENGTH (FEET)
86	100
114	125
156	150
211	200
285-970	250

NOTE:
EACH TRANSMITTER TO RAIL WIRE FROM XMT1 AND XMT2 MUST NOT EXCEED THE MAXIMUM LENGTH SPECIFIED IN THE TABLE SHOWN. THE RECEIVER WIRE LENGTH IS NOT CRITICAL. DOES NOT APPLY TO 6 TRACK WIRE APPLICATION.

NEW SHEET

Designed: 03/08/13
NAGLE CORRIDOR PROJECT. REPLACE DC CIRCUITS W/ CWT FROM M.P. 9.68 TO M.P. 12.45
Rec#: WO#: 11289
ISS: DLD/JPW
/ /PRS/JTB

MODIFICATION LEVEL		
Q. A. LAST LEVEL CHECKED	DU	
LAST LEVEL MOD THIS TYPICAL	DU	
LAST LEVEL BY DESIGNER	DU	
CHANGED FROM TYPICAL?	Y	

REV 01.24.11 4K 4TKB4GF.3

CIRCUIT MODIFICATIONS ARE NOT TO BE MADE WITHOUT AUTHORITY FROM THE OFFICE OF SIGNAL DESIGN

Date: 03/08/13
Des: PRS
Chk: DLD/JPW
AFE: 11289

UNION PACIFIC RAILROAD
CHICAGO, ILLINOIS
NAGLE AVENUE
HARVARD SUBDIVISION
Office of Sr AVP Engineering - Signal/TCO Omaha, Nebraska

Sh.: 3
DOT 173887G
MP: 10.31
ID: HAR1031.3X

```
Minimum Program Steps Report
----------------------------

Location and SIN
----------------
DOT Number: 173887G
Milepost Number: M.P. 10.31
Site Name: CHICAGO, ILLINOIS

SIN: 762010010016 *

* Parameter is part of office check number calculation.

MCF and Template Selection
--------------------------
MCF Name: GCP-T6X-02-4.mcf
MCF Revision: 24
MCFCRC: 09FC363B

Template = 1D:3 Uni pairs (OCCN) *

* Parameter is part of office check number calculation.

Minimum Program Steps
---------------------
TEMPLATE:  module configuration
Track 5/RIO 2 Slot = RIO (OCCN) *

TEMPLATE:  preemption
Preempt Logic = Simult (OCCN) *

TEMPLATE:  track 1-Uni, Island
Track 1 : GCP Frequency = 968 Hz (Field,TCN)
Track 1 : Approach Distance = 1255 ft (Set in Field,TCN)
Track 1 : Prime Warning Time = 47 sec (OCCN) *
Track 1 : Prime UAX = IP (OCCN) *
Track 1 : Prime UAX Pickup = 15 sec (OCCN) *
Track 1 : GCP Transmit Level = Medium (Set in Field,TCN)
Track 1 : Uni/Bi/Sim-Bidirnl = Sim. Bidirnl (OCCN) *
Track 1 : Isl Frequency = 7.1 kHz (Set in Field)
Track 1 : Island Distance = 208 ft (Set in Field,TCN)

TEMPLATE:  track 1 Daxes
Track 1 : Dax A Used = Yes (OCCN) *
Track 1 : Dax A Warning Time = 53 sec (OCCN) *
Track 1 : Dax A Offset Distance = 1371 ft (Set in Field)
Track 1 : Dax B Used = Yes (OCCN) *
Track 1 : Dax B Warning Time = 25 sec (OCCN) *
Track 1 : Dax B Offset Distance = 3343 ft (Set in Field)

TEMPLATE:  track 2-Uni,No Island
Track 2 : GCP Frequency = 210 Hz (Field,TCN)
Track 2 : Approach Distance = 3135 ft (Set in Field,TCN)
Track 2 : Prime Warning Time = 47 sec (OCCN) *
Track 2 : Prime UAX = IP (OCCN) *
Track 2 : Prime UAX Pickup = 15 sec (OCCN) *
Track 2 : GCP Transmit Level = Medium (Set in Field,TCN)
Track 2 : Uni/Bi/Sim-Bidirnl = Sim. Bidirnl (OCCN) *

TEMPLATE:  track 2 Daxes
Track 2 : Dax A Used = Yes (OCCN) *
Track 2 : Dax A Warning Time = 42 sec (OCCN) *
Track 2 : Dax A Offset Distance = 4091 ft (Set in Field)
Track 2 : Dax B Used = Yes (OCCN) *
Track 2 : Dax B Warning Time = 56 sec (OCCN) *
Track 2 : Dax B Offset Distance = 6525 ft (Set in Field)

TEMPLATE:  track Anding
AND 2 Used = Yes (OCCN) *

TEMPLATE:  AND 1 XR
AND 1 Enable Used = Yes (OCCN) *

TEMPLATE:  AND 2
AND 2 Track 1 = Dax A (OCCN) *
AND 2 Enable Used = Yes (OCCN) *

TEMPLATE:  SSCC
SSCC 1 : Lamp Neutral Test = Off (Set in Field)
SSCC 2 : Lamp Neutral Test = Off (Set in Field)

TEMPLATE:  OOS
OOS Control = OOS IPs (OCCN) *
T2 OOS Control = OOS Input 1 (OCCN) *

TEMPLATE:  OP assignment 1
OUT 1.1 = AND 2 (OCCN) *
OUT 1.2 = Sim Preempt (OCCN) *
OUT 2.1 = T2 Dax A (OCCN) *
OUT 2.2 = T2 Dax B (OCCN) *

TEMPLATE:  OP assignment 2
OUT 5.1 = T1 Dax B (OCCN) *

TEMPLATE:  IP assignment 1
IN 1.1 = Preempt Health (OCCN) *
IN 1.2 = Out Of Service IP 1 (OCCN) *
IN 2.1 = T2 Prime UAX (OCCN) *

TEMPLATE:  IP assignment 2
IN 5.1 = AND 2 Enable (OCCN) *
IN 5.2 = T1 Prime UAX (OCCN) *
IN 5.3 = AND 1 XR Enable (OCCN) *
IN 5.4 = AND 1 XR Enable (OCCN) *

TEMPLATE:  IP assignment SSCC
IN 7.1 = AND 1 XR Enable (OCCN) *

GCP:  track 1
Track 1 : GCP Freq Category = Offset (Set in Field)

GCP:  track 2
Track 2 : GCP Freq Category = Offset (Set in Field)

ADVANCED:  site options
Daylight Savings = On (Set in Field)

* Parameter is part of office check number calculation.

Check Numbers
-------------
Office Check Number: 44342118
Config. Check Number: 7B2F1939
(Based on MCF Revision 24)

Parameters not part of office check number calculation:

Track 1 : GCP Frequency = 968 Hz
Track 1 : Approach Distance = 1255 ft (Set in Field)
Track 1 : GCP Transmit Level = Medium (Set in Field)
Track 1 : Isl Frequency = 7.1 kHz
Track 1 : Island Distance = 208 ft (Set in Field)
Track 1 : Dax A Offset Distance = 1371 ft (Set in Field)
Track 1 : Dax B Offset Distance = 3343 ft (Set in Field)
Track 2 : GCP Frequency = 210 Hz
Track 2 : Approach Distance = 3135 ft (Set in Field)
Track 2 : GCP Transmit Level = Medium (Set in Field)
Track 2 : Dax A Offset Distance = 4091 ft (Set in Field)
Track 2 : Dax B Offset Distance = 6525 ft (Set in Field)
SSCC 1 : Lamp Neutral Test = Off (Set in Field)
SSCC 2 : Lamp Neutral Test = Off (Set in Field)
Track 1 : GCP Freq Category = Offset (Set in Field)
Track 2 : GCP Freq Category = Offset (Set in Field)
Daylight Savings = On (Set in Field)

Comments
--------
<none>

Configuration Package File
--------------------------
Filename: HAR1031_173887G_A.pac
Path: H:\01-Xing\up110143\GCP Programs\M.P. 10.31\
Date/Time: 9/04/2012 16:10:48
```

NEW SHEET

Designed: 03/08/13
NAGLE CORRIDOR PROJECT. REPLACE DC CIRCUITS W/ CWT FROM M.P. 9.68 TO M.P. 12.45
Rec*: WO#: 11289
IS: DLD/JPW / /PRS/JTB

NOTE: Actual OFFSET and ISLAND distances must be verified by field personnel.

CIRCUIT MODIFICATIONS ARE NOT TO BE MADE WITHOUT AUTHORITY FROM THE OFFICE OF SIGNAL DESIGN

Date:	03/08/13
Des:	PRS
Chk:	DLD/JPW
AFE:	11289

UNION PACIFIC RAILROAD

CHICAGO, ILLINOIS
NAGLE AVENUE
HARVARD SUBDIVISION

Office of Sr AVP Engineering - Signal/TCO Omaha, Nebraska

Sh.:	3A
DOT	173887G
MP:	10.31
ID:	HAR1031.3AX