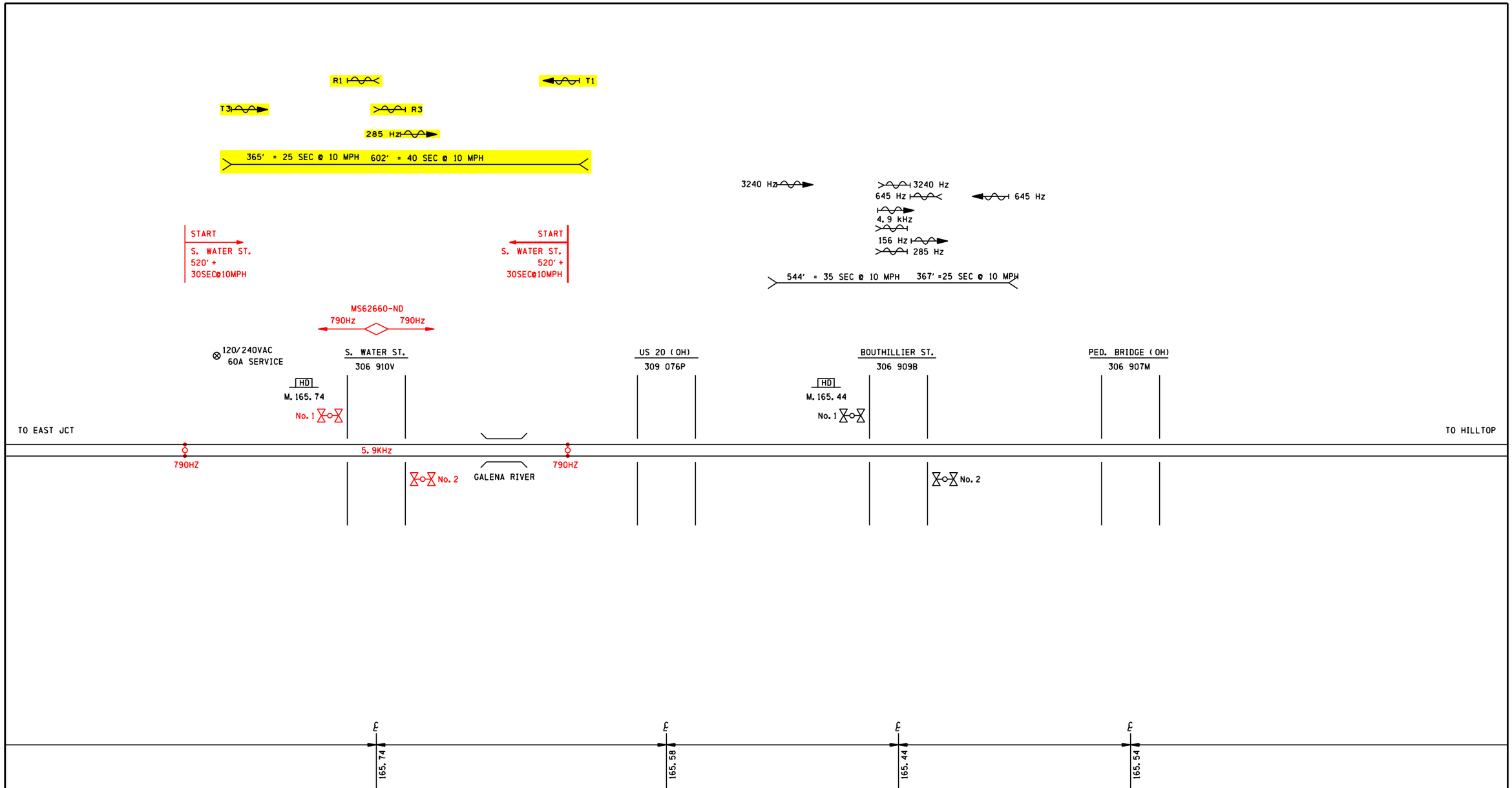

NOTES

1) DENOTES MULTI FREQUENCY NARROW BAND SHUNT #62775-3497

PROPOSED
DESIGN NO. 13-0126
RED-IN YELLOW-OUT

AS INSTALLED
DATE _____
BY _____
(PRINT NAME)

SUPSERSEDES SD1016 - MP 165 TO 166

PROPOSED D	M	Y	REVISIONS	D	C	COMPLETED D	M	Y	C
			REDRAWN			28	03	13	TPF
28	03	13	ADD AFLS TO S WATER ST	TPF	PAC				

REGION SOUTHERN
SUB. DUBUQUE 383

SIGNALS AND COMMUNICATIONS HOMEWOOD
DES.
CH.

TRACK PLAN
M.165.00 TO M.166.00

DUB-165.00-T

dub-165.00-t.dgn
01-APR-2013

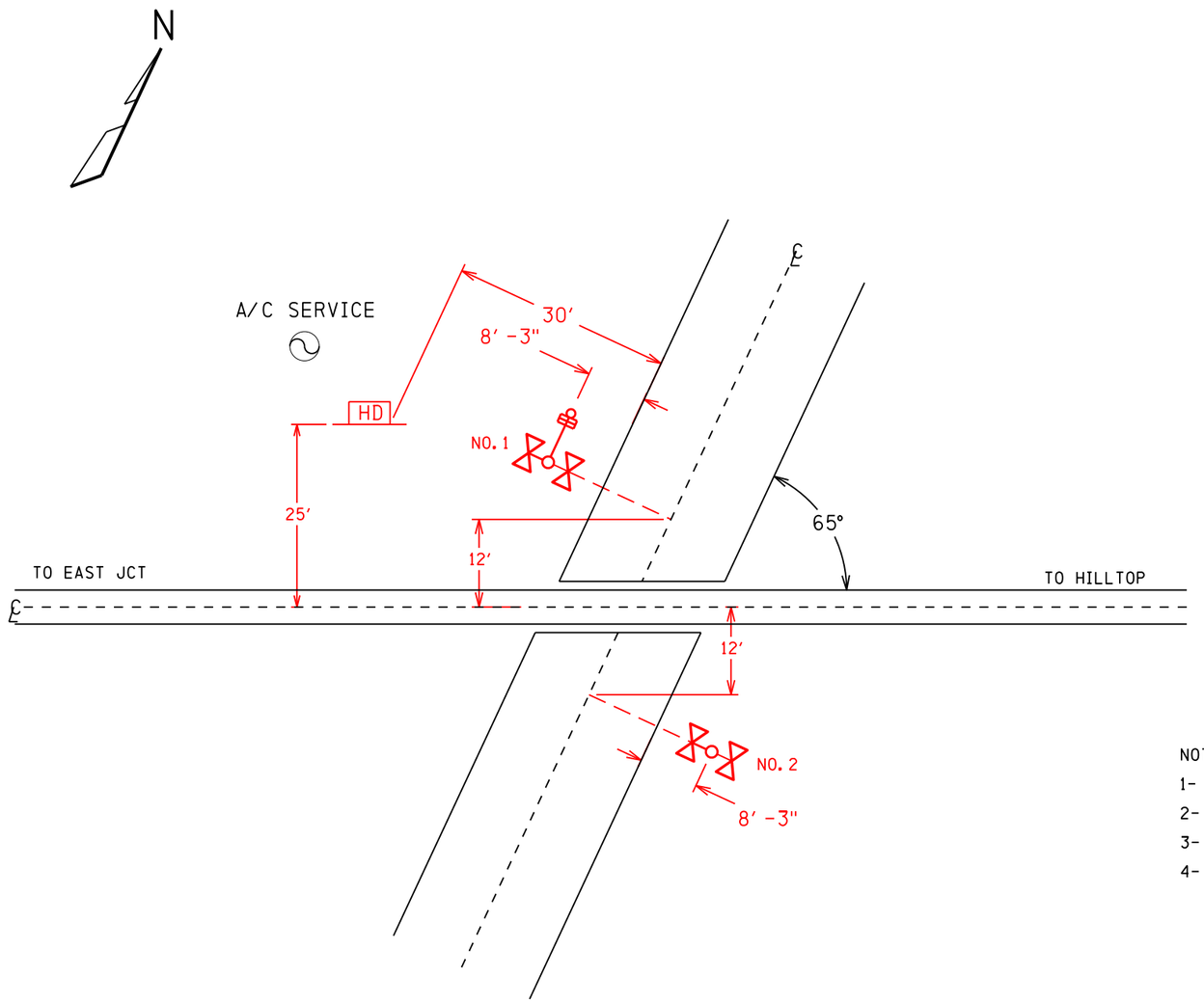

NOTES -

1- DESIGN SPEED 10 M.P.H.

2- CLEARANCE DISTANCE 35 FEET MAXIMUM.

3- CONSTANT WARNING CONTROL.

4- APPROACH CIRCUIT DISTANCE PROVIDES FOR:

TRAFFIC SIGNAL PRE-EMPTION	NA SEC. (NA SEC. ADVANCE)
MINIMUM WARNING TIME	20 SEC.
GATE DESCENT DELAY TIME	NA SEC.
BUFFER TIME	10 SEC.
EQUIPMENT REACTION TIME	05 SEC.

PROPOSED
DESIGN NO. 13-0126
RED-IN YELLOW-OUT

AS INSTALLED
DATE _____
BY _____
(PRINT NAME)

SUPERSEDES I.C.G.-165.8-W

PROPOSED D	PROPOSED M	PROPOSED Y	REVISIONS	D	C	COMPLETED D	COMPLETED M	COMPLETED Y	C
			REDRAWN			28	03	13	TPF
28	03	13	UPGRADE TO AFLS	TPF	PAC				

REGION SOUTHERN
SUB. DUBUQUE 383
CN

SIGNALS AND COMMUNICATIONS
DES.
10 JUNE 1954
CH.

SITUATION SKETCH
SCALE 1" = 20'
GALENA, IL
S. WATER ST.

DUB-165.74-0

DOT# 306 910V

3

dub-165.74-0.dgn
01-APR-2013

FLASHING LIGHT UNITS ALIGNMENT TABLE

PRIMARY FRONT LIGHTS FOR VEHICLES							
SIG #	LIGHT #	ROUNDEL		ROAD SPEED	MINIMUM DISTANCE	RECOMMENDED DISTANCE	ALIGNMENT DISTANCE
		SIZE	TYPE	MPH	FT	FT	FT
1	1,2	12"	LED	20	175	225	
2	7,8	12"	LED	20	175	225	
BACK LIGHTS FOR VEHICLES							
SIG #	LIGHT #	ROUNDEL		ROAD SPEED	MINIMUM DISTANCE	RECOMMENDED DISTANCE	ALIGNMENT DISTANCE
		SIZE	TYPE	MPH	FT	FT	FT
1	3,4	12"	LED	N/A	N/A	N/A	50
2	5,6	12"	LED	N/A	N/A	N/A	50

NOTE
FIELD IS TO PROVIDE THE ACTUAL ALIGNMENT DISTANCE AS DETERMINED BY
SCP-706: ROAD CROSSING DEVICE LIGHT UNIT ALIGNMENT PROCEDURES

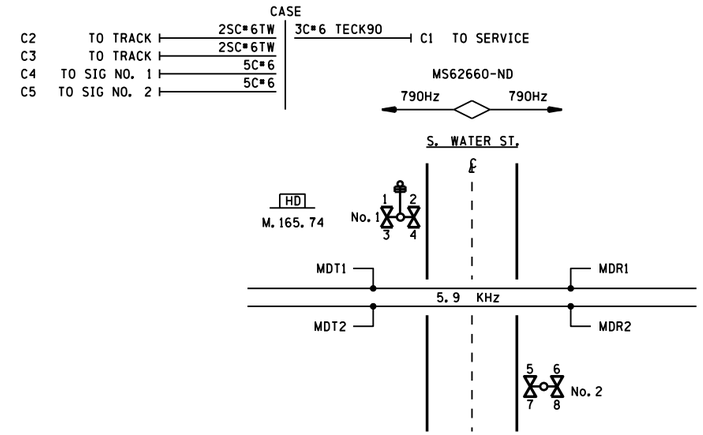

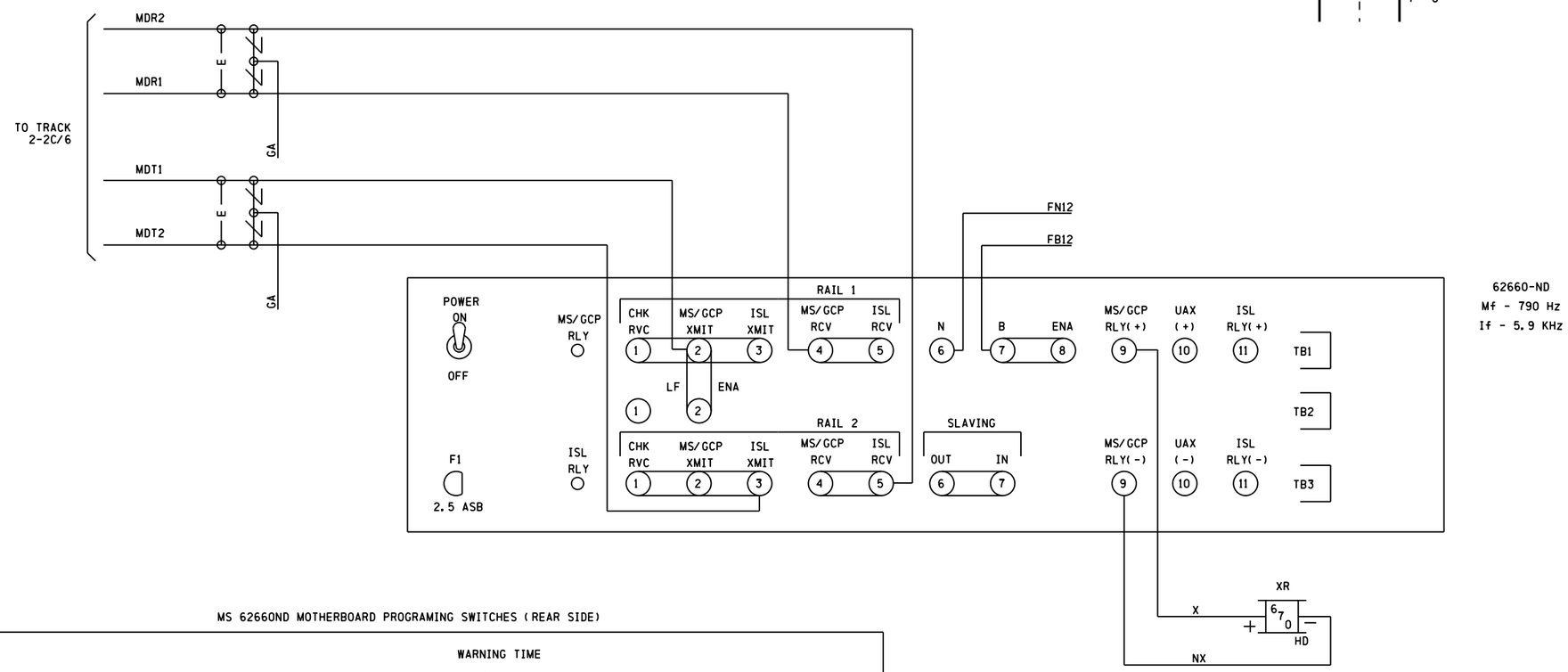

MS 6266OND MOTHERBOARD PROGRAMING SWITCHES (REAR SIDE)

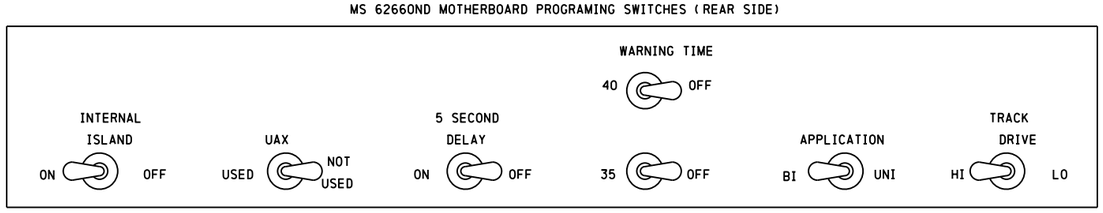

	INTERNAL ISLAND		UAX		5 SECOND DELAY		WARNING TIME				APPLICATION		TRACK DRIVE	
UNIT	ON	OFF	USED	NOT USED	ON	OFF	35	OFF	40	OFF	BI	UNI	HI	LO
MAIN	X			X		X		X		X	X		X	

PROPOSED
DESIGN NO. 13-0126
RED-IN YELLOW-OUT

AS INSTALLED
DATE
BY
(PRINT NAME)

SUPERSEDES IC DRAWING 05100C01

PROPOSED D	PROPOSED M	PROPOSED Y	REVISIONS	D	C	COMPLETED D	COMPLETED M	COMPLETED Y	C
			REDRAWN			28	03	13	TPF
28	03	13	RELOCATE TO S WATER ST	TPF	PAC				

REGION SOUTHERN
SUB. DUBUQUE 383
SIGNALS AND COMMUNICATIONS
DES. AVS
20 FEBRUARY 2004
CH.
TRACK LAYOUT & MS660ND CIRCUITS
GALENA, IL
S. WATER ST.
DUB-165.74-01
DOT# 306 910V

dub-165.74-01.dgn
01-APR-2013

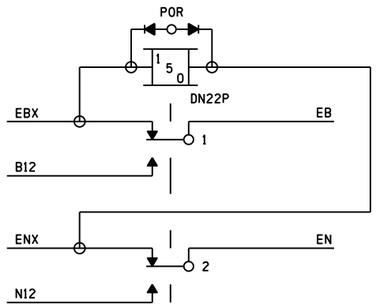

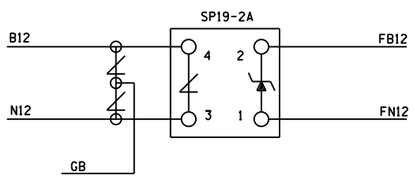

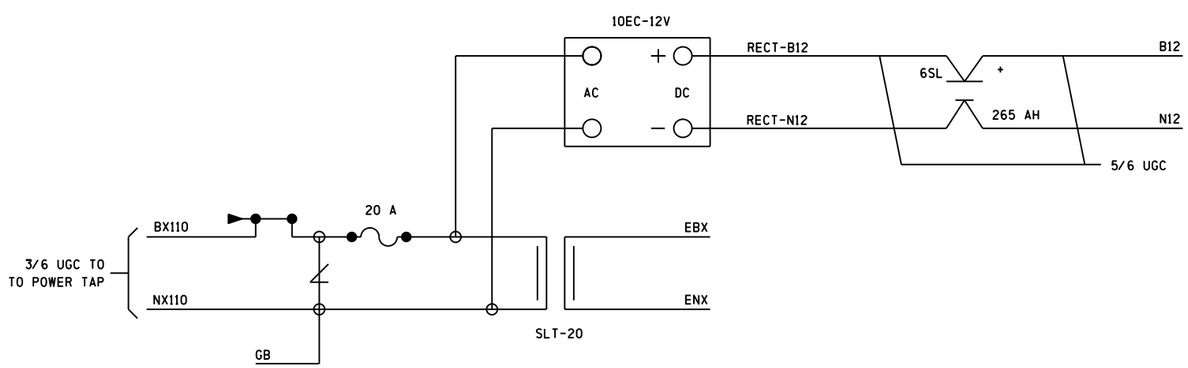

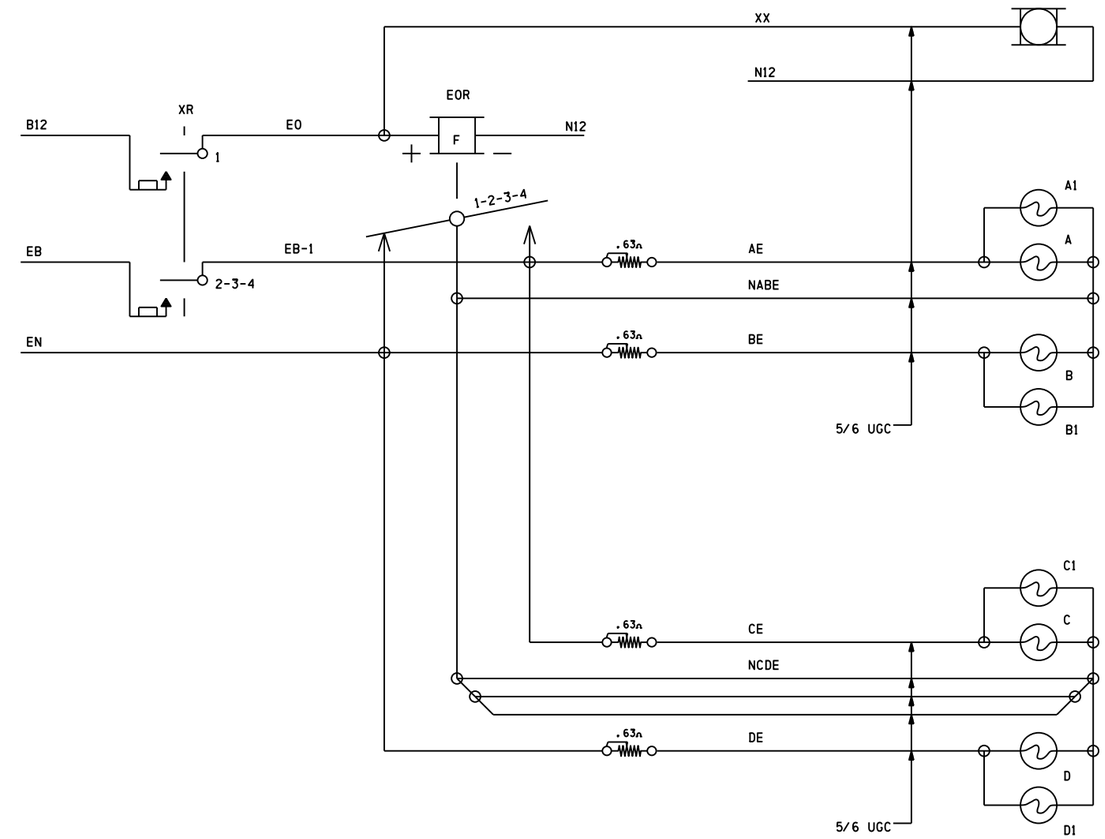

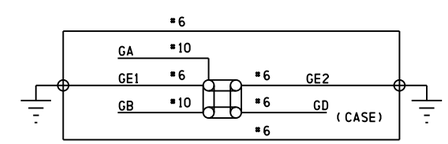

PROPOSED
DESIGN NO. 13-0126
RED-IN YELLOW-OUT

AS INSTALLED
DATE
BY
(PRINT NAME)

SUPERSEDES IC DRAWING 05100C02

PROPOSED D	M	Y	REVISIONS	D	C	COMPLETED D	M	Y	C
			REDRAWN			28	03	13	TPF
28	03	13	RELOCATE TO S WATER ST	TPF	PAC				

REGION SOUTHERN
SUB. DUBUQUE 383

SIGNALS AND COMMUNICATIONS
DES. AVS
20 FEBRUARY 2004
CH.

POWER DISTRIBUTION &
AFLS CONTROL CIRCUITS
GALENA, IL
S. WATER ST.

DUB-165.74-02

DOT# 306 910V

3

dub-165.74-02.dgn
01-APR-2013