PLAN MUST NOT BE MODIFIED WITHOUT APPROVAL OF SIGNAL ENGINEERING COPYRIGHT 2012 BNSF RAILWAY COMPANY. ALL RIGHTS RESERVED.

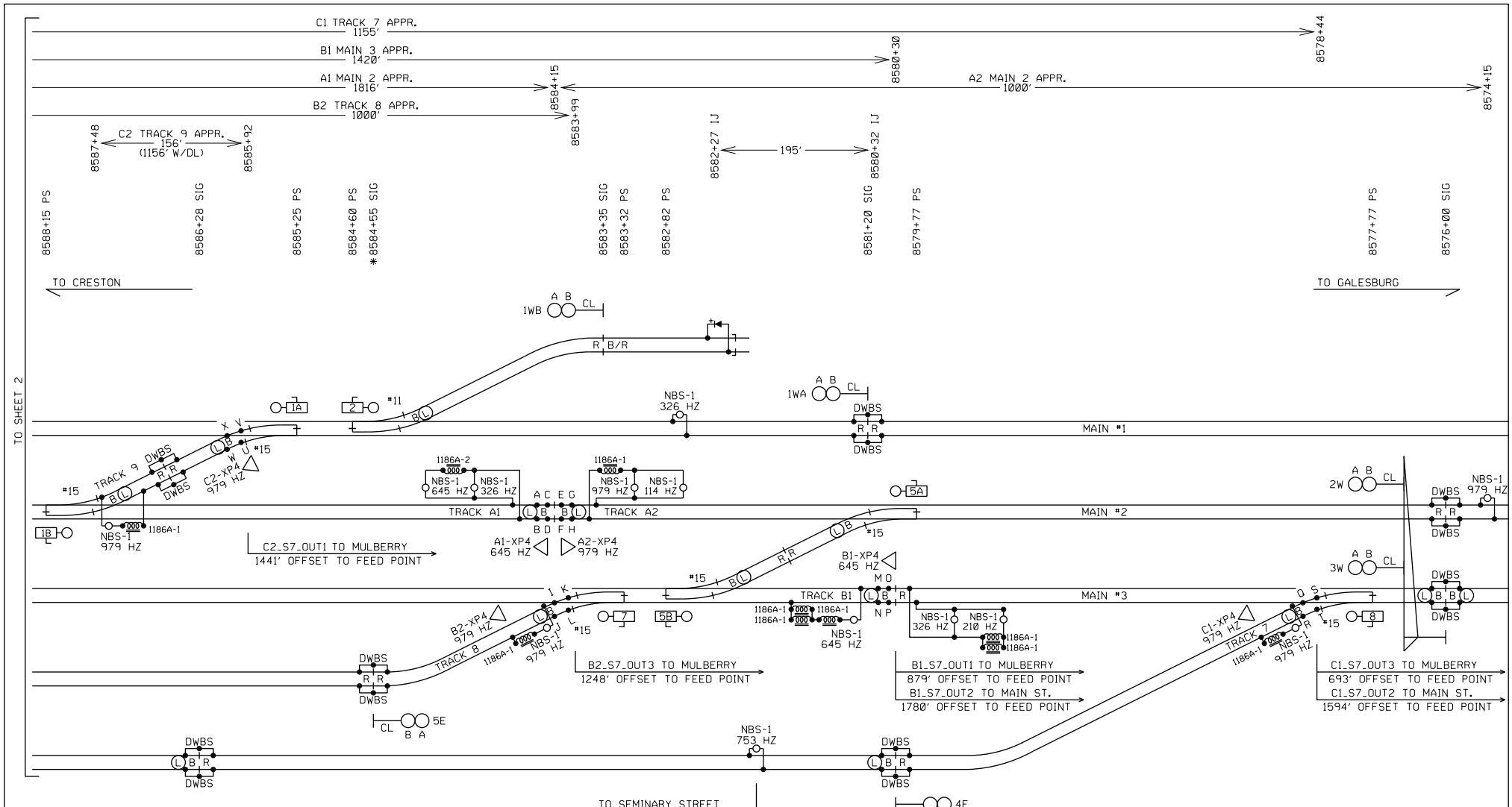

NOTES:

EQUIPMENT IS DESIGNED FOR 20 SECONDS MINIMUM WARNING TIME AT 50 MPH ON MAIN 1 AND MAIN 2.
EQUIPMENT IS DESIGNED FOR 20 SECONDS MINIMUM WARNING TIME AT 30 MPH ON MAIN 3.
APPROACHES WERE LENGTHENED 8 SECOND(S) FOR WIDE OR ANGLED DOWNSTREAM CROSSING (CT) MULBERRY ST.
APPROACHES WERE LENGTHENED 7 SECOND(S) FOR WIDE OR ANGLED DOWNSTREAM CROSSING (CT) MAIN ST.
APPROACHES WERE LENGTHENED 4 SECOND(S) FOR WIDE OR ANGLED DOWNSTREAM CROSSING (CT) CEDAR ST.
APPROACHES WERE LENGTHENED 10 SECONDS FOR SPEED VARIANCE AND BALLAST CHANGES (BT).
APPROACHES WERE LENGTHENED 4 SECONDS FOR EQUIPMENT RESPONSE TIME (ERT).

NOTES:

-TEST TERMINAL
-EQUALIZER
-LINE ARRESTER
-HEAVY DUTY ARRESTER
-TWISTED WIRE 2 TURNS PER FOOT

ALL WIRES #16 AWG UNLESS OTHERWISE NOTED

ALL NEW

REVISED 07-23-12

DESIGNED 06-15-11
GALESBURG 2011
TCS/JML SEQ.# 47149

BURLINGTON NORTHERN SANTA FE RAILWAY

CROSSING CIRCUIT PLAN
REMOTE CROSSING GALESBURG, IL

LS 0001 MP 162.56 SH 01 OF 16

RED = IN YELLOW = OUT PRELIMINARY

PLAN MUST NOT BE MODIFIED WITHOUT APPROVAL OF SIGNAL ENGINEERING COPYRIGHT 2012 BNSF RAILWAY COMPANY. ALL RIGHTS RESERVED.

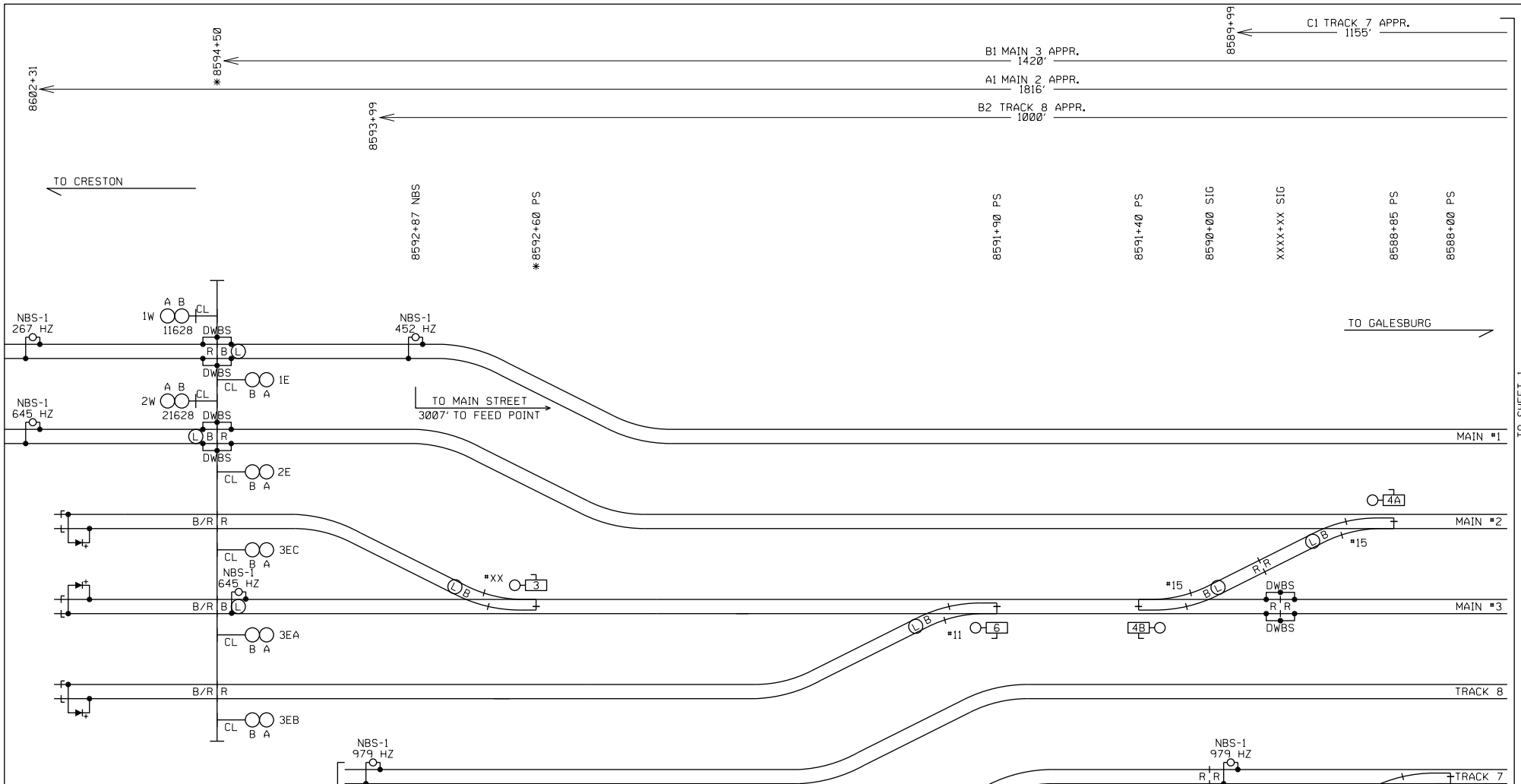

ALL NEW

REVISED 07-23-12

DESIGNED 06-15-11
GALESBURG 2011
TCS/JML SEQ.# 47149

BURLINGTON NORTHERN SANTA FE RAILWAY

CROSSING CIRCUIT PLAN
REMOTE CROSSING GALESBURG, IL

LS 0001 | MP 162.56 | SH 02 OF 16

0001162_56x02c_.dgn July 23, 2012

RED = IN YELLOW = OUT PRELIMINARY

PLAN MUST NOT BE MODIFIED WITHOUT APPROVAL OF SIGNAL ENGINEERING COPYRIGHT 2011 BNSF RAILWAY COMPANY. ALL RIGHTS RESERVED.

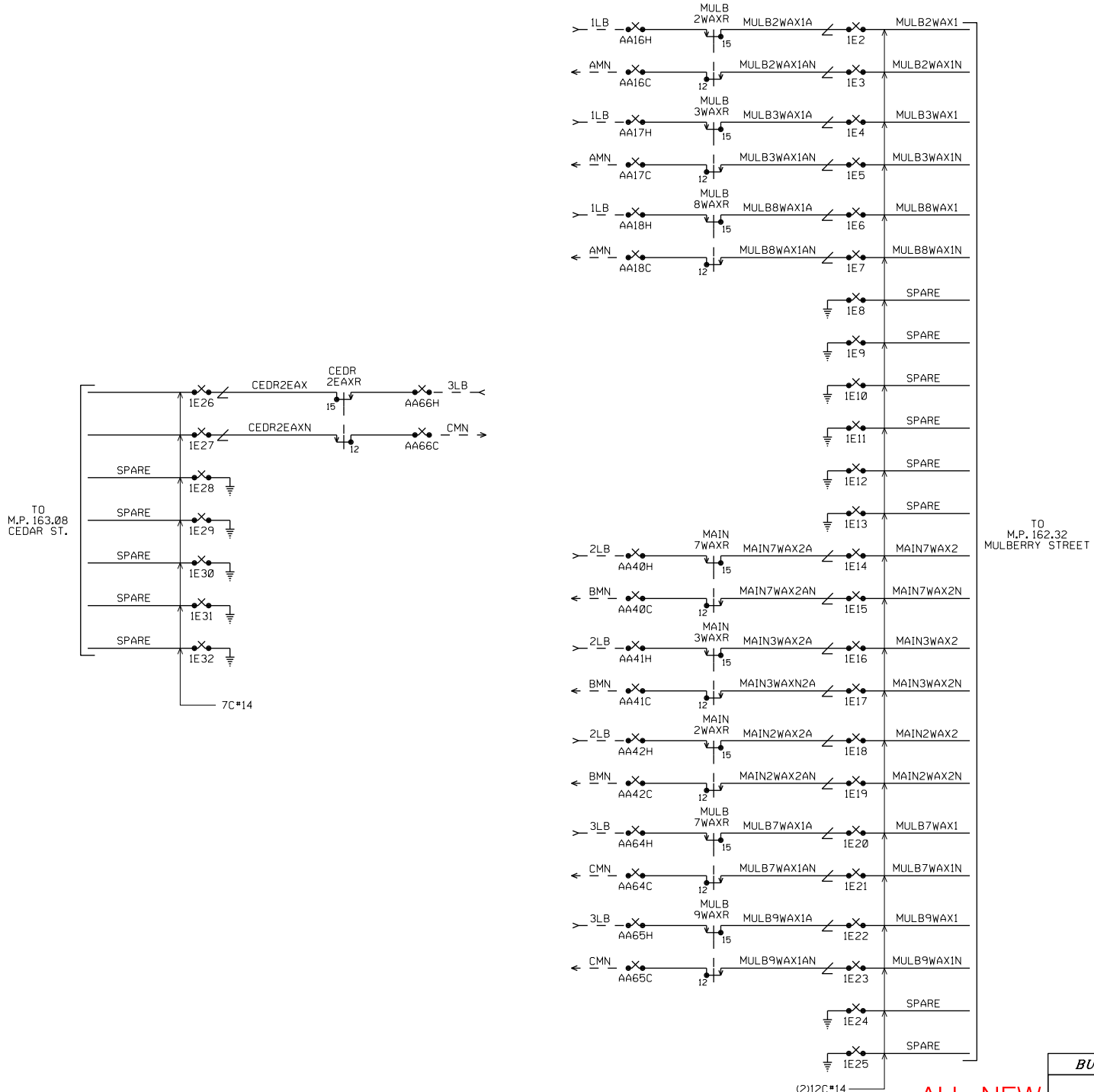

ALL NEW

BURLINGTON NORTHERN SANTA FE RAILWAY

DAX CIRCUITS
REMOTE CROSSING GALESBURG, IL

DESIGNED 06-15-11
GALESBURG 2011
TCS/JML SEQ.# 47149

LS 0001 | MP 162.56 | SH 03 OF 16

PRELIMINARY

0001162_56x03c_.dgn June 15, 2011

PLAN MUST NOT BE MODIFIED WITHOUT APPROVAL OF SIGNAL ENGINEERING COPYRIGHT 2012 BNSF RAILWAY COMPANY. ALL RIGHTS RESERVED.

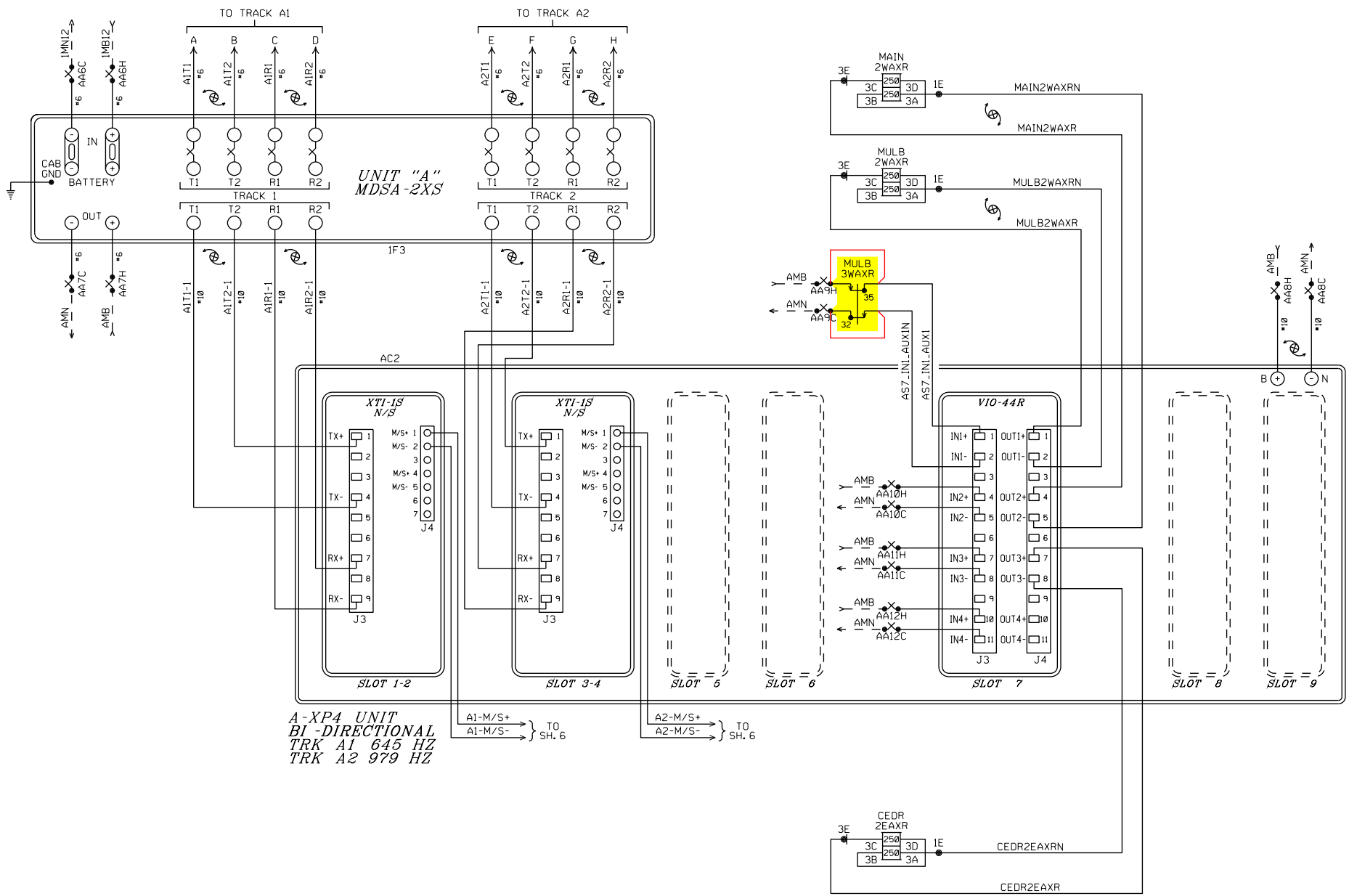

ALL NEW

REVISED 07-23-12

DESIGNED 06-15-11
GALESBURG 2011
TCS/JML SEQ.# 47149

BURLINGTON NORTHERN SANTA FE RAILWAY

AXP4 TRACK CIRCUITS
REMOTE CROSSING GALESBURG, IL

LS 0001 MP 162.56 SH 04 OF 16

RED = IN YELLOW = OUT PRELIMINARY

PLAN MUST NOT BE MODIFIED WITHOUT APPROVAL OF SIGNAL ENGINEERING COPYRIGHT 2012 BNSF RAILWAY COMPANY. ALL RIGHTS RESERVED.

APPLICATION SOFTWARE INFO

TYPE	REDUNDANT
NAME	2t_c10_1
CONFIGURATION	10
CHECKSUM	2F18
CRC	BBCD

CHASSIS ID

DIP NO.	1	2	3	4	5	6	7	8
SHUNT	X	X	X	X	I	X	X	X
CHASSIS ID DECIMAL	8							

NOTE: I = TAB INTACT
X = TAB PUNCHED OUT

VITAL I/O

SLOT 7 INPUTS

INPUT #	NAME	FUNCTION
INPUT 1	S7_IN1_AUX1	AUX/CWE For MDR1
INPUT 2	S7_IN2_AUX2	AUX/CWE For MDR2
INPUT 3	S7_IN3_AUX3	AUX/CWE For MDR3
INPUT 4	S7_IN4_AUX4	AUX/CWE For MDR4

SLOT 7 OUTPUTS

OUTPUT #	NAME	FUNCTION
OUTPUT 1	S7_OUT1_MDR1	RELAY OUTPUT-MDR1
OUTPUT 2	S7_OUT2_MDR2	RELAY OUTPUT-MDR2
OUTPUT 3	S7_OUT3_MDR3	RELAY OUTPUT-MDR3
OUTPUT 4	S7_OUT4_MDR4	RELAY OUTPUT-MDR4

MDR SETUP FOR SLOT 7

MDR #	MDR 1		MDR 2		MDR 3		MDR 4	
WARNING TIME (SECS.)	38		37		34		99	
CONSTANT WARNING (CW) OR MOTION DETECTOR (MD)	CW		CW		CW		CW	
TRACK ASSIGN	TRACK 1	ASSIGNABLE	TRACK 1	ASSIGNABLE	ASSIGNABLE	TRACK 2	ASSIGNABLE	ASSIGNABLE
TRACK OFFSET DISTANCE (FEET)	1264'	0	2165'	0	0	2583'	0	0
MD RESTART RX	*0	*0	*0	*0	*0	*0	*0	*0
SUDDEN SHUNT ZONE RX	0	0	0	0	0	0	0	0
POST JOINT	ENABLE	ENABLE	ENABLE	ENABLE	ENABLE	ENABLE	ENABLE	ENABLE
POST JOINT RX	* 64 15	15	15	15	15	15	15	15
POST JOINT DELAY (SECS.)	15	15	15	15	15	15	15	15
POSITIVE START	DISABLE	DISABLE	DISABLE	DISABLE	DISABLE	DISABLE	DISABLE	DISABLE
POSITIVE START RX	0	0	0	0	0	0	0	0
POSITIVE START ACTIVE TIME (MIN.)	0	0	0	0	0	0	0	0
AUX RECOVERY DELAY (SECS.)	0		0		0		0	
CWE-WT	80		80		80		80	

NOTE:
THESE ARE DEFAULT VALUES. FIELD ASSIGNABLE.

PROGRAM VERSION 5.9 OR LATER

*=FIELD ADJUSTMENT TO BE MADE ACCORDING TO THE XP4 INSTRUCTION MANUAL 100323-010 AH0 & SUPPLEMENTS.

BASIC TRACK SETUP

ADJUSTMENT NAME	TRACK 1	TRACK 2
ISLAND ASSIGNMENT	NA	NA
APPROACH FREQUENCY (HZ)	645 HZ	979 HZ
APPROACH LENGTH (FEET)	1816'	1000'
MASTER/SLAVE	MASTER	MASTER
UNI/BI	BI	BI
RX ADJUST	100	100
TCA (TRANSMITTER CHECK)	*	*
LIA (LUMPED IMPEDANCE)	*	*
ADVANCED APR. CAL	INACTIVE	INACTIVE
NBS COMP RX	*	*
AUTO RX	ENABLE	ENABLE
MD TIMER ENABLE	DISABLE	DISABLE
MD TIMER DELAY (MIN.)	10	10
LOS TIME (SEC.)	16 SEC.	16 SEC.
IJ-LOS TIME (SEC.)	5 SEC.	5 SEC.
FALSE SHUNT ENABLE	DISABLE	DISABLE
FALSE SHUNT RX	0	0
FALSE SHUNT DELAY (MIN.)	10	10
APPROACH RELEASE ENABLE	DISABLE	DISABLE
APPROACH RELEASE RX	0	0
APPROACH RELEASE DELAY (MIN.)	10	10
NRML_SHRT_VRYSHRT	NRML	NRML

ISL1_ASSIGN ISL2_ASSIGN

ISLAND SETUP

TRACK #	TRACK 1	TRACK 2
FREQUENCY (HZ)	NA	NA
ISLAND ENABLE	DISABLE	DISABLE
FAULT DELAY	NA	NA
LOS COUNT (SEC.)	NA	NA

MAINTENANCE MENU

TRACK #	TRACK 1	TRACK 2
ENABLE/DISABLE	ENABLE	ENABLE
DISABLE TIMEOUT	*	*
BALLAST COMP.	*	*
PHASE COMP.	*	*

NOTE: DL = DEFAULT LEVEL
NA = NON APPLICABLE

ALL NEW

REVISED 07-23-12

DESIGNED 06-15-11
GALESBURG 2011
TCS/JML SEQ.# 47149

BURLINGTON NORTHERN SANTA FE RAILWAY

AXP4 PROGRAM CONFIGURATION
REMOTE CROSSING GALESBURG, IL

LS 0001 MP 162.56 SH 05 OF 16

RED = IN YELLOW = OUT PRELIMINARY

PLAN MUST NOT BE MODIFIED WITHOUT APPROVAL OF SIGNAL ENGINEERING COPYRIGHT 2011 BNSF RAILWAY COMPANY. ALL RIGHTS RESERVED.

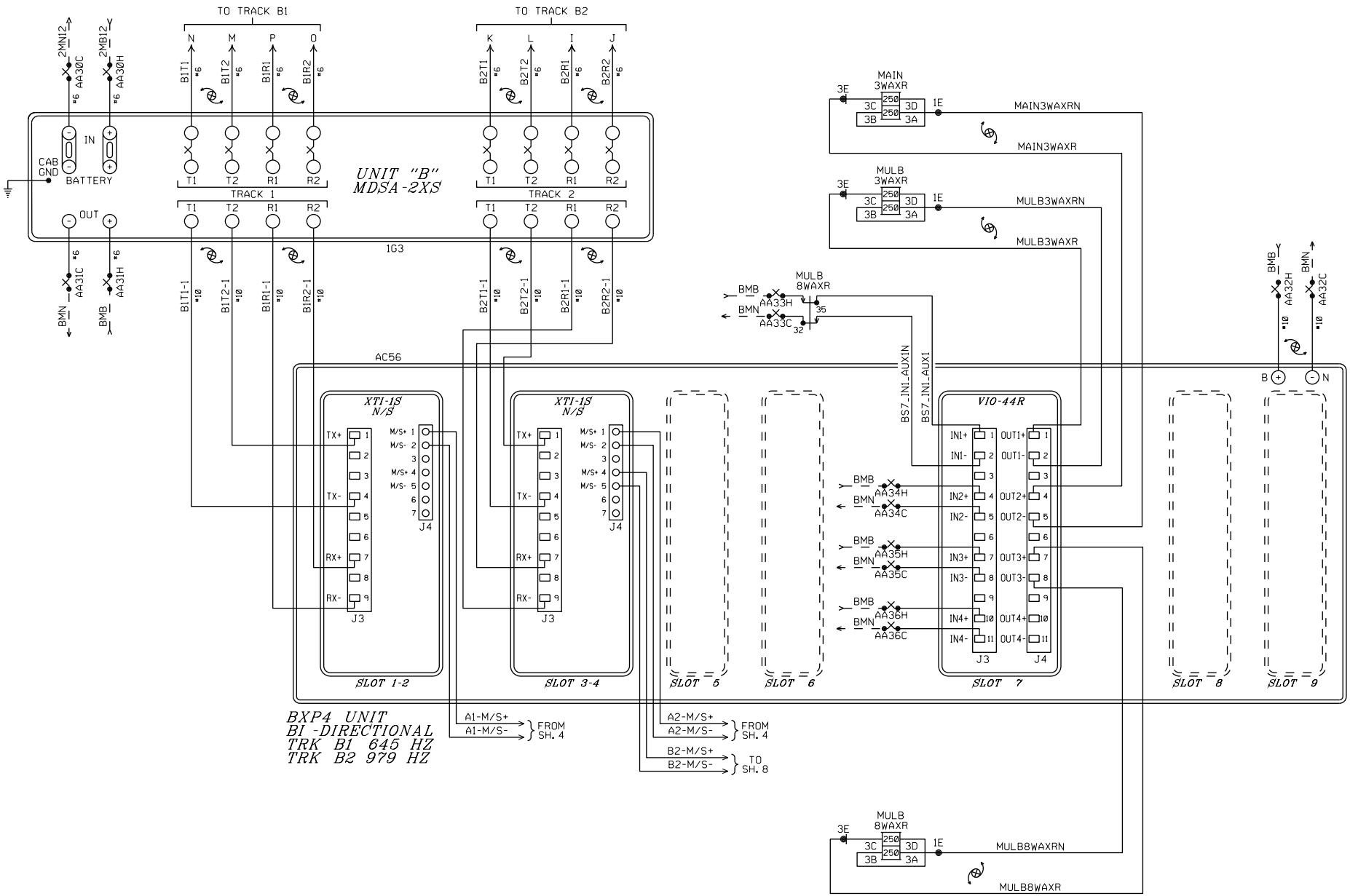

ALL NEW

BURLINGTON NORTHERN SANTA FE RAILWAY

BXP4 TRACK CIRCUITS
REMOTE CROSSING GALESBURG, IL

DESIGNED 06-15-11 GALESBURG 2011 TCS/JML SEQ.# 47149

LS 0001 MP 162.56 SH 06 OF 16

PRELIMINARY

PLAN MUST NOT BE MODIFIED WITHOUT APPROVAL OF SIGNAL ENGINEERING COPYRIGHT 2012 BNSF RAILWAY COMPANY. ALL RIGHTS RESERVED.

APPLICATION SOFTWARE INFO

TYPE	REDUNDANT
NAME	2t_c10_1
CONFIGURATION	10
CHECKSUM	2F18
CRC	BBCD

CHASSIS ID

DIP NO.	1	2	3	4	5	6	7	8
SHUNT	X	X	X	X	I	X	X	X
CHASSIS ID DECIMAL	8							

NOTE: I = TAB INTACT
X = TAB PUNCHED OUT

VITAL I/O

SLOT 7 INPUTS

INPUT #	NAME	FUNCTION
INPUT 1	S7_IN1_AUX1	AUX/CWE For MDR1
INPUT 2	S7_IN2_AUX2	AUX/CWE For MDR2
INPUT 3	S7_IN3_AUX3	AUX/CWE For MDR3
INPUT 4	S7_IN4_AUX4	AUX/CWE For MDR4

SLOT 7 OUTPUTS

OUTPUT #	NAME	FUNCTION
OUTPUT 1	S7_OUT1_MDR1	RELAY OUTPUT-MDR1
OUTPUT 2	S7_OUT2_MDR2	RELAY OUTPUT-MDR2
OUTPUT 3	S7_OUT3_MDR3	RELAY OUTPUT-MDR3
OUTPUT 4	S7_OUT4_MDR4	RELAY OUTPUT-MDR4

MDR SETUP FOR SLOT 7

MDR #	MDR 1		MDR 2		MDR 3		MDR 4	
WARNING TIME (SECS.)	38		37		38		99	
CONSTANT WARNING (CW) OR MOTION DETECTOR (MD)	CW		CW		CW		CW	
TRACK ASSIGN	TRACK 1	ASSIGNABLE	TRACK 1	ASSIGNABLE	ASSIGNABLE	TRACK 2	ASSIGNABLE	ASSIGNABLE
TRACK OFFSET DISTANCE (FEET)	879'	0	1780'	0	0	1248'	0	0
MD RESTART RX	*0	*0	*0	*0	*0	*0	*0	*0
SUDDEN SHUNT ZONE RX	0	0	0	0	0	0	0	0
POST JOINT	ENABLE	ENABLE	ENABLE	ENABLE	ENABLE	ENABLE	ENABLE	ENABLE
POST JOINT RX	*47 15	15	*78 15	15	15	15 *84	15	15
POST JOINT DELAY (SECS.)	15	15	15	15	15	15	15	15
POSITIVE START	DISABLE	DISABLE	DISABLE	DISABLE	DISABLE	DISABLE	DISABLE	DISABLE
POSITIVE START RX	0	0	0	0	0	0	0	0
POSITIVE START ACTIVE TIME (MIN.)	0	0	0	0	0	0	0	0
AUX RECOVERY DELAY (SECS.)	0		0		0		0	
CWE-WT	80		80		80		80	

NOTE:
THESE ARE DEFAULT VALUES. FIELD ASSIGNABLE.

PROGRAM VERSION 5.9 OR LATER

*=FIELD ADJUSTMENT TO BE MADE ACCORDING TO THE XP4 INSTRUCTION MANUAL 100323-010 AH0 & SUPPLEMENTS.

BASIC TRACK SETUP

ADJUSTMENT NAME	TRACK 1	TRACK 2
ISLAND ASSIGNMENT	NA	NA
APPROACH FREQUENCY (HZ)	645 HZ	979 HZ
APPROACH LENGTH (FEET)	1420'	1000'
MASTER/SLAVE	SLAVE	SLAVE
UNI/BI	BI	BI
RX ADJUST	100	100
TCA (TRANSMITTER CHECK)	*	*
LIA (LUMPED IMPEDANCE)	*	*
ADVANCED APR. CAL	INACTIVE	INACTIVE
NBS COMP RX	*	*
AUTO RX	ENABLE	ENABLE
MD TIMER ENABLE	DISABLE	DISABLE
MD TIMER DELAY (MIN.)	10	10
LOS TIME (SEC.)	16 SEC.	16 SEC.
IJ-LOS TIME (SEC.)	5 SEC.	5 SEC.
FALSE SHUNT ENABLE	DISABLE	DISABLE
FALSE SHUNT RX	0	0
FALSE SHUNT DELAY (MIN.)	10	10
APPROACH RELEASE ENABLE	DISABLE	DISABLE
APPROACH RELEASE RX	0	0
APPROACH RELEASE DELAY (MIN.)	10	10
NRML_SHRT_VRYSHRT	NRML	NRML

ISL1_ASSIGN ISL2_ASSIGN

ISLAND SETUP

TRACK #	TRACK 1	TRACK 2
FREQUENCY (HZ)	NA	NA
ISLAND ENABLE	DISABLE	DISABLE
FAULT DELAY	NA	NA
LOS COUNT (SEC.)	NA	NA

MAINTENANCE MENU

TRACK #	TRACK 1	TRACK 2
ENABLE/DISABLE	ENABLE	ENABLE
DISABLE TIMEOUT	*	*
BALLAST COMP.	*	*
PHASE COMP.	*	*

NOTE: DL = DEFAULT LEVEL
NA = NON APPLICABLE

ALL NEW

REVISED 07-23-12

DESIGNED 06-15-11
GALESBURG 2011
TCS/JML SEQ.# 47149

BURLINGTON NORTHERN SANTA FE RAILWAY

BXP4 PROGRAM CONFIGURATION
REMOTE CROSSING GALESBURG, IL

LS 0001 MP 162.56 SH 07 OF 16

RED = IN YELLOW = OUT PRELIMINARY

PLAN MUST NOT BE MODIFIED WITHOUT APPROVAL OF SIGNAL ENGINEERING COPYRIGHT 2012 BNSF RAILWAY COMPANY. ALL RIGHTS RESERVED.

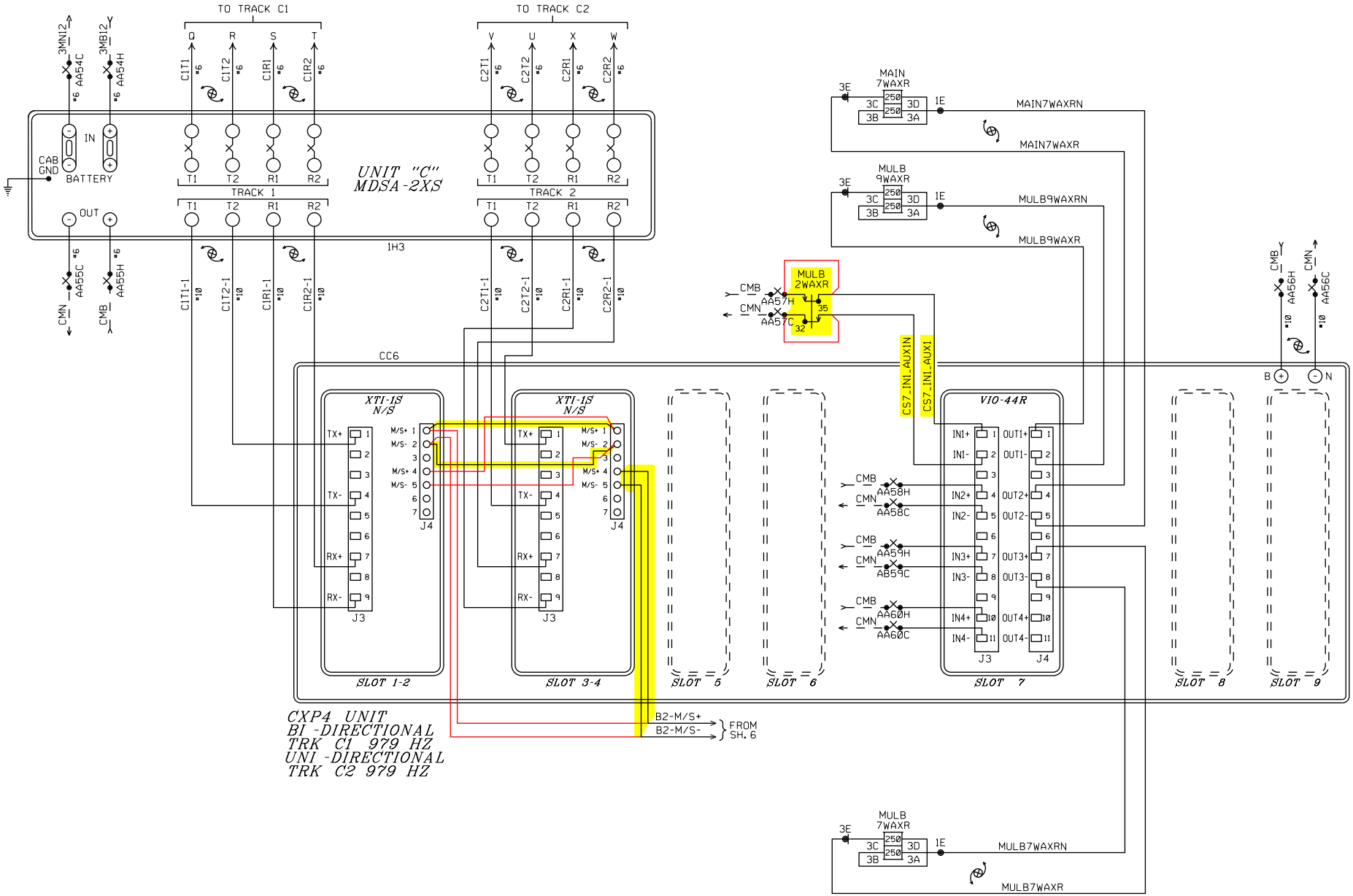

ALL NEW

REVISED 07-23-12

DESIGNED 06-15-11
GALESBURG 2011
TCS/JML SEQ.# 47149

BURLINGTON NORTHERN SANTA FE RAILWAY

CXP4 TRACK CIRCUITS
REMOTE CROSSING GALESBURG, IL

LS 0001 MP 162.56 SH 08 OF 16

RED = IN YELLOW = OUT

PRELIMINARY

PLAN MUST NOT BE MODIFIED WITHOUT APPROVAL OF SIGNAL ENGINEERING COPYRIGHT 2012 BNSF RAILWAY COMPANY. ALL RIGHTS RESERVED.

APPLICATION SOFTWARE INFO

TYPE	REDUNDANT
NAME	2t_c10_1
CONFIGURATION	10
CHECKSUM	2F18
CRC	BBCD

CHASSIS ID

DIP NO.	1	2	3	4	5	6	7	8
SHUNT	X	X	X	X	I	X	X	X
CHASSIS ID DECIMAL	8							

NOTE: I = TAB INTACT
X = TAB PUNCHED OUT

VITAL I/O

SLOT 7 INPUTS

INPUT #	NAME	FUNCTION
INPUT 1	S7_IN1_AUX1	AUX/CWE For MDR1
INPUT 2	S7_IN2_AUX2	AUX/CWE For MDR2
INPUT 3	S7_IN3_AUX3	AUX/CWE For MDR3
INPUT 4	S7_IN4_AUX4	AUX/CWE For MDR4

SLOT 7 OUTPUTS

OUTPUT #	NAME	FUNCTION
OUTPUT 1	S7_OUT1_MDR1	RELAY OUTPUT-MDR1
OUTPUT 2	S7_OUT2_MDR2	RELAY OUTPUT-MDR2
OUTPUT 3	S7_OUT3_MDR3	RELAY OUTPUT-MDR3
OUTPUT 4	S7_OUT4_MDR4	RELAY OUTPUT-MDR4

MDR SETUP FOR SLOT 7

MDR #	MDR 1		MDR 2		MDR 3		MDR 4	
WARNING TIME (SECS.)	38		37		38		99	
CONSTANT WARNING (CW) OR MOTION DETECTOR (MD)	MD		CW		CW		CW	
TRACK ASSIGN	ASSIGNABLE	TRACK 2	TRACK 1	ASSIGNABLE	TRACK 1	ASSIGNABLE	ASSIGNABLE	ASSIGNABLE
TRACK OFFSET DISTANCE (FEET)	0	1441'	1594'	0	693'	0	0	0
MD RESTART RX	*0	*0	*0	*0	*0	*0	*0	*0
SUDDEN SHUNT ZONE RX	0	0	0	0	0	0	0	0
POST JOINT	ENABLE	ENABLE	ENABLE	ENABLE	ENABLE	ENABLE	ENABLE	ENABLE
POST JOINT RX	15	15	15	15	15	15	15	15
POST JOINT DELAY (SECS.)	15	15	15	15	15	15	15	15
POSITIVE START	DISABLE	DISABLE	DISABLE	DISABLE	DISABLE	DISABLE	DISABLE	DISABLE
POSITIVE START RX	0	0	0	0	0	0	0	0
POSITIVE START ACTIVE TIME (MIN.)	0	0	0	0	0	0	0	0
AUX RECOVERY DELAY (SECS.)	0		0		0		0	
CWE-WT	80		80		80		80	

NOTE:
THESE ARE DEFAULT VALUES. FIELD ASSIGNABLE.

PROGRAM VERSION 5.9 OR LATER
*=FIELD ADJUSTMENT TO BE MADE ACCORDING TO THE XP4 INSTRUCTION MANUAL 100323-010 AH0 & SUPPLEMENTS.

BASIC TRACK SETUP

ADJUSTMENT NAME	TRACK 1	TRACK 2
ISLAND ASSIGNMENT	NA	NA
APPROACH FREQUENCY (HZ)	979 HZ	979 HZ
APPROACH LENGTH (FEET)	1155'	156'
MASTER/SLAVE	SLAVE	SLAVE
UNI/BI	BI	UNI
RX ADJUST	100	100
TCA (TRANSMITTER CHECK)	*	*
LIA (LUMPED IMPEDANCE)	*	*
ADVANCED APR. CAL	INACTIVE	INACTIVE
NBS COMP RX	*	*
AUTO RX	ENABLE	ENABLE
MD TIMER ENABLE	DISABLE	DISABLE
MD TIMER DELAY (MIN.)	10	10
LOS TIME (SEC.)	16 SEC.	16 SEC.
IJ-LOS TIME (SEC.)	5 SEC.	5 SEC.
FALSE SHUNT ENABLE	DISABLE	DISABLE
FALSE SHUNT RX	0	0
FALSE SHUNT DELAY (MIN.)	10	10
APPROACH RELEASE ENABLE	DISABLE	DISABLE
APPROACH RELEASE RX	0	0
APPROACH RELEASE DELAY (MIN.)	10	10
NRML_SHRT_VRYSHRT	NRML	* VRYSHRT

ISL1_ASSIGN ISL2_ASSIGN

ISLAND SETUP

TRACK #	TRACK 1	TRACK 2
FREQUENCY (HZ)	NA	NA
ISLAND ENABLE	DISABLE	DISABLE
FAULT DELAY	NA	NA
LOS COUNT (SEC.)	NA	NA

MAINTENANCE MENU

TRACK #	TRACK 1	TRACK 2
ENABLE/DISABLE	ENABLE	ENABLE
DISABLE TIMEOUT	*	*
BALLAST COMP.	*	*
PHASE COMP.	*	*

NOTE: DL = DEFAULT LEVEL
NA = NON APPLICABLE

ALL NEW

REVISED 07-23-12

DESIGNED 06-15-11
GALESBURG 2011
TCS/JML SEQ.# 47149

BURLINGTON NORTHERN SANTA FE RAILWAY

CXP4 PROGRAM CONFIGURATION
REMOTE CROSSING GALESBURG, IL

LS 0001 MP 162.56 SH 09 OF 16

RED = IN YELLOW = OUT PRELIMINARY

PLAN MUST NOT BE MODIFIED WITHOUT APPROVAL OF SIGNAL ENGINEERING COPYRIGHT 2011 BNSF RAILWAY COMPANY. ALL RIGHTS RESERVED.

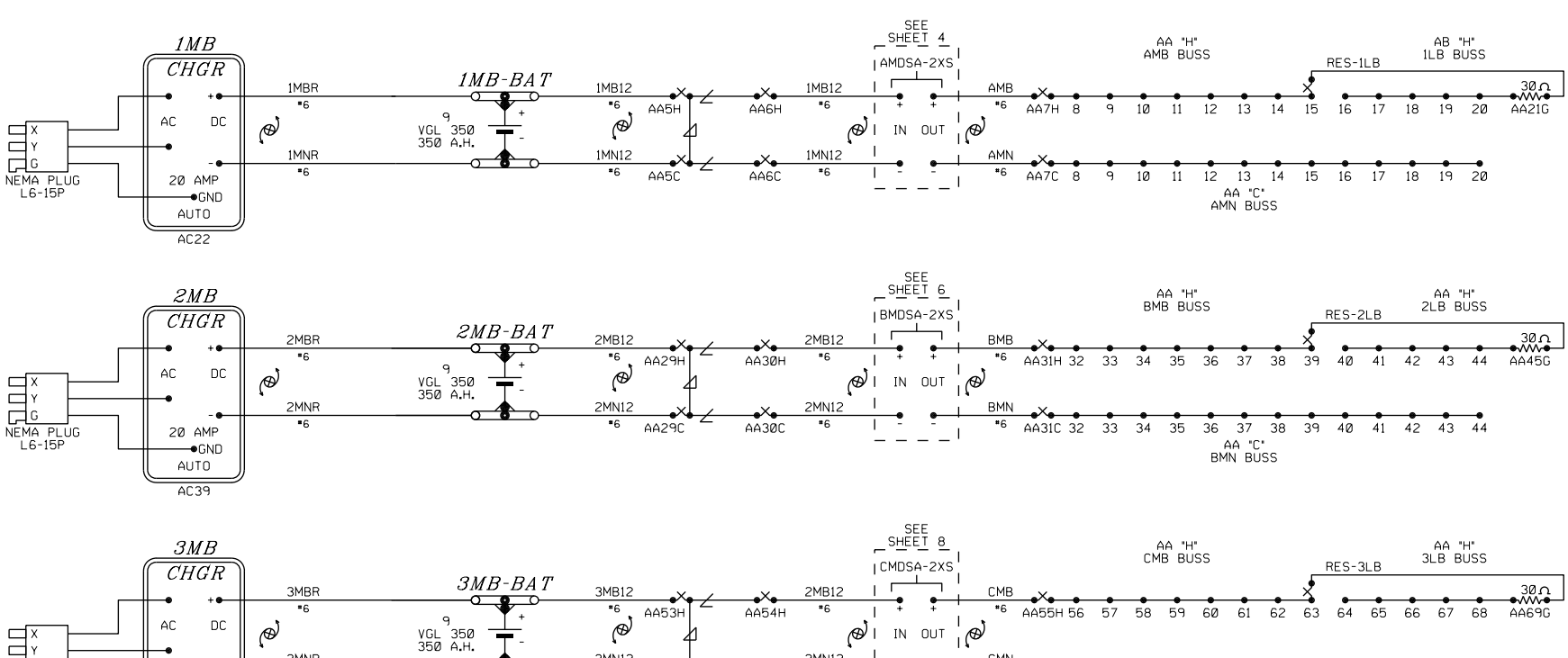

ALL NEW

DESIGNED 06-15-11
GALESBURG 2011
TCS/JML SEQ.# 47149

BURLINGTON NORTHERN SANTA FE RAILWAY

BATTERY CIRCUITS
REMOTE CROSSING GALESBURG, IL

LS	MP	SH
0001	162.56	10 OF 16

PRELIMINARY

PLAN MUST NOT BE MODIFIED WITHOUT APPROVAL OF SIGNAL ENGINEERING

COPYRIGHT 2011 BNSF RAILWAY COMPANY. ALL RIGHTS RESERVED.

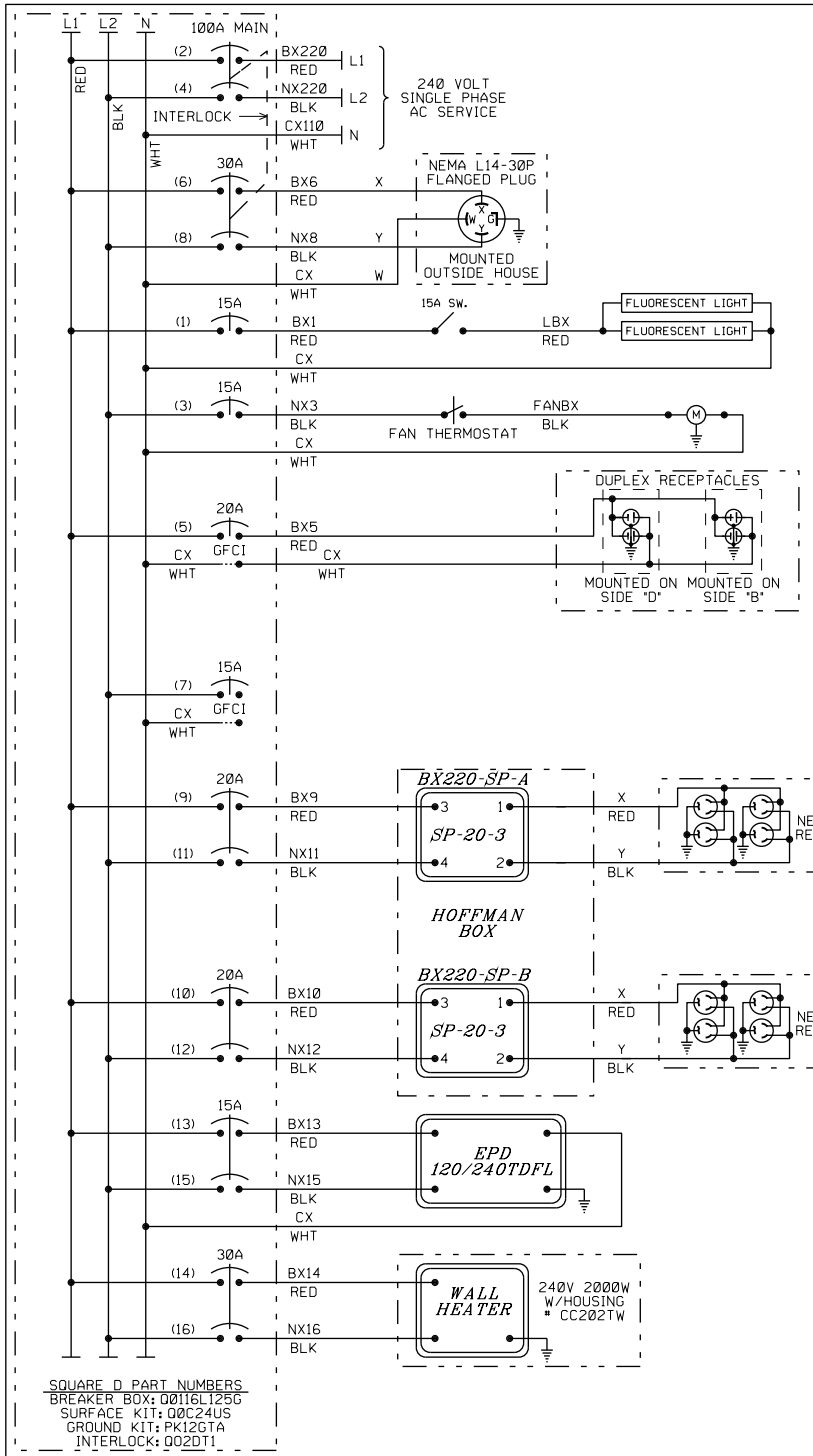

SQUARE D PART NUMBERS
BREAKER BOX: Q0116L125G
SURFACE KIT: Q0C24US
GROUND KIT: PK12GTA
INTERLOCK: Q02DT1

NOTES:

1. USE THE FOLLOWING COLOR CODE:
   GRN - GREEN - SAFETY EQUIPMENT GROUND
   WHT - WHITE - CX110 (NEUTRAL)
   BLK - BLACK - NX220 (L2)
   RED - RED - BX220 (L1)
   EXCEPTIONS TO THE ABOVE COLOR CODE ARE THE PRE-WIRED, SEALED ARRESTOR UNITS MOUNTED ON THE BREAKER BOX WHICH HAVE TWO BLACK AND ONE WHITE WIRE EACH.
2. ▶ = WIRE NUT
3. MINIMUM WIRE SIZE
   10 AMP - NO.14 AWG THHN OR THWN SOLID
   20 AMP - NO.12 AWG THHN OR THWN SOLID
   30 AMP - NO.10 AWG THHN OR THWN SOLID
4. GROUND FAULT INTERRUPT (GFCI) MUST BE USED ON ALL CIRCUITS SERVING CONVENIENCE OUTLETS AND ANY EQUIPMENT OUTSIDE THE BUNGALOW. RECEPTACLE MOUNTED GFCI MAY BE USED INSTEAD OF BREAKER TYPE.
5. ISOLATION TRANSFORMER IF INSTALLED.
   OLD JUMPER WIRES BLK/YEL TO BLK/GRN WITH CX (WHT)
   JUMPER WIRES BLK TO BLK/RED WITH NX7 (BLK)
   NEW JUMPER WIRES YEL TO BRN WITH CX (WHT)
   JUMPER WIRES BLK TO BLU WITH NX7 (BLK)
6. ALL GROUND WIRES RUN TO BREAKER BOX GROUND BUSS

SIDE D

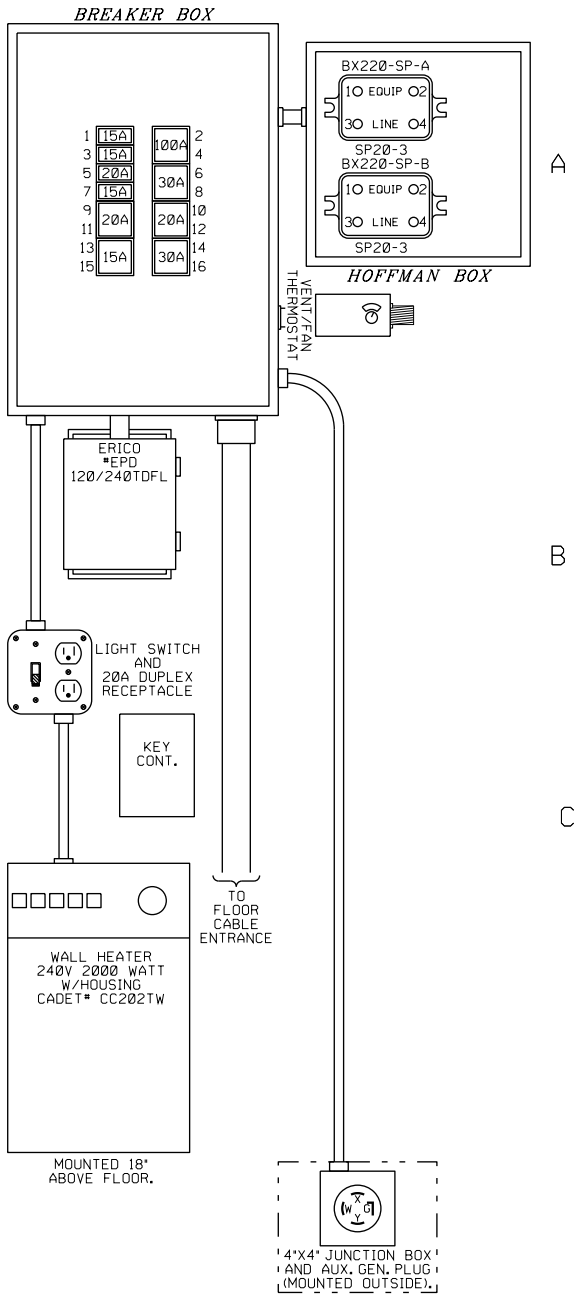

ALL NEW

BURLINGTON NORTHERN SANTA FE RAILWAY

POWER DISTRIBUTION
REMOTE CROSSING GALESBURG, IL

DESIGNED 06-15-11 GALESBURG 2011 TCS/JML SEQ.# 47149

LS 0001 MP 162.56 SH 11 OF 16

PRELIMINARY

PLAN MUST NOT BE MODIFIED WITHOUT APPROVAL OF SIGNAL ENGINEERING COPYRIGHT 2012 BNSF RAILWAY COMPANY. ALL RIGHTS RESERVED.

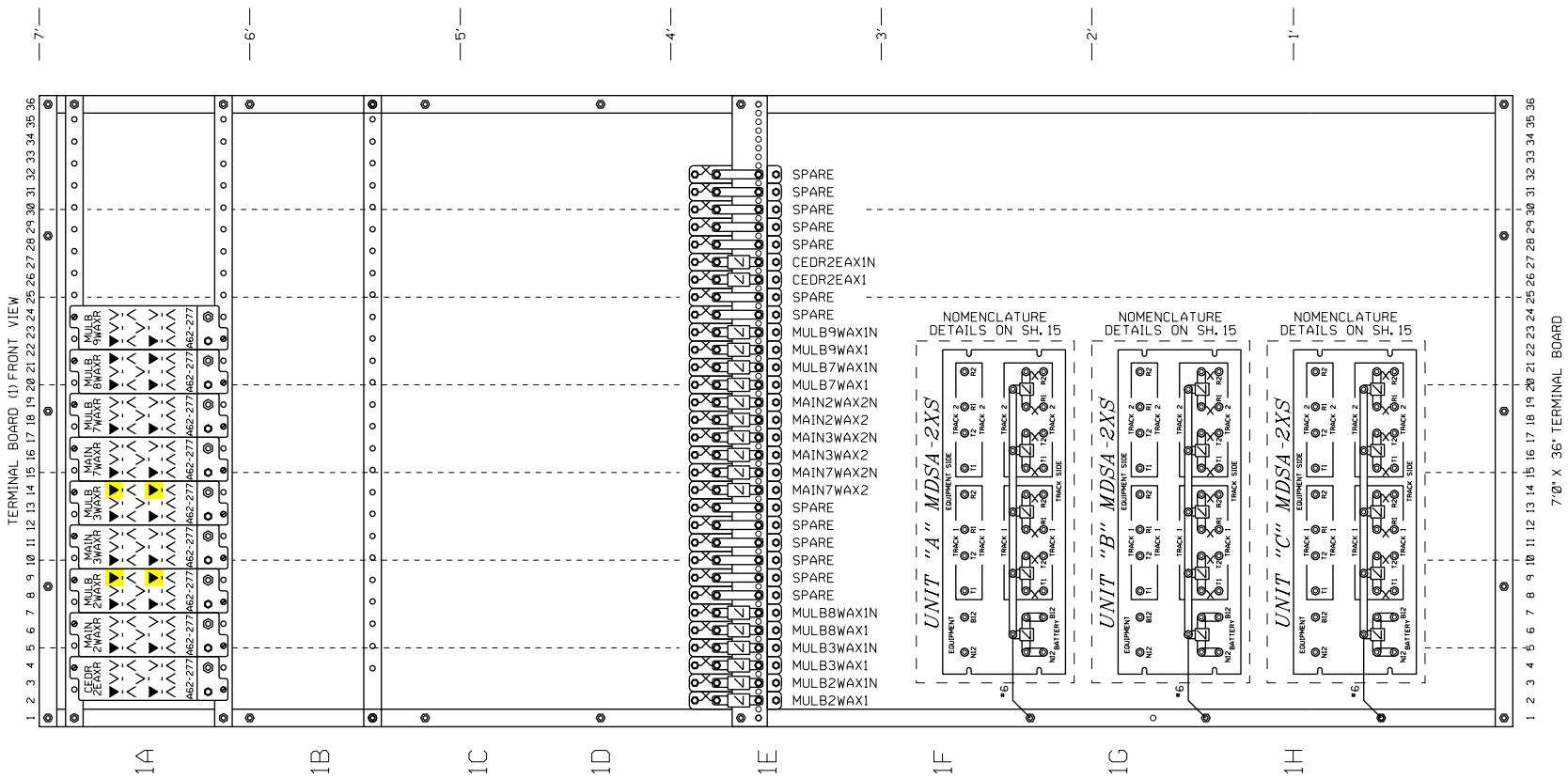

RELAY CROSS REFERENCE

GRS	SAFETRAN
A62-277	400004

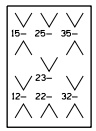

A62-277

▼ = CONTACT USED

▽ = CONTACT NOT USED

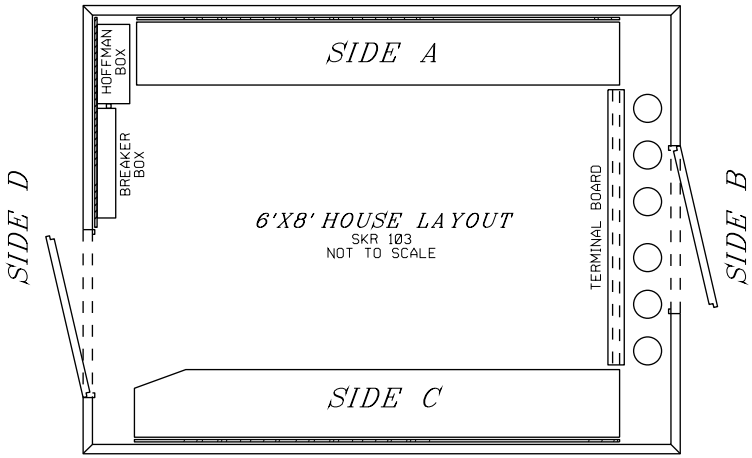

ALL NEW

REVISED 07-23-12

DESIGNED 06-15-11
GALESBURG 2011
TCS/JML SEQ.# 47149

BURLINGTON NORTHERN SANTA FE RAILWAY

TERMINAL BOARD 1 LAYOUT
REMOTE CROSSING GALESBURG, IL

LS 0001 MP 162.56 SH 12 OF 16

0001162_56x12c_.dgn July 23, 2012

RED = IN YELLOW = OUT PRELIMINARY

PLAN MUST NOT BE MODIFIED WITHOUT APPROVAL OF SIGNAL ENGINEERING COPYRIGHT 2011 BNSF RAILWAY COMPANY. ALL RIGHTS RESERVED.

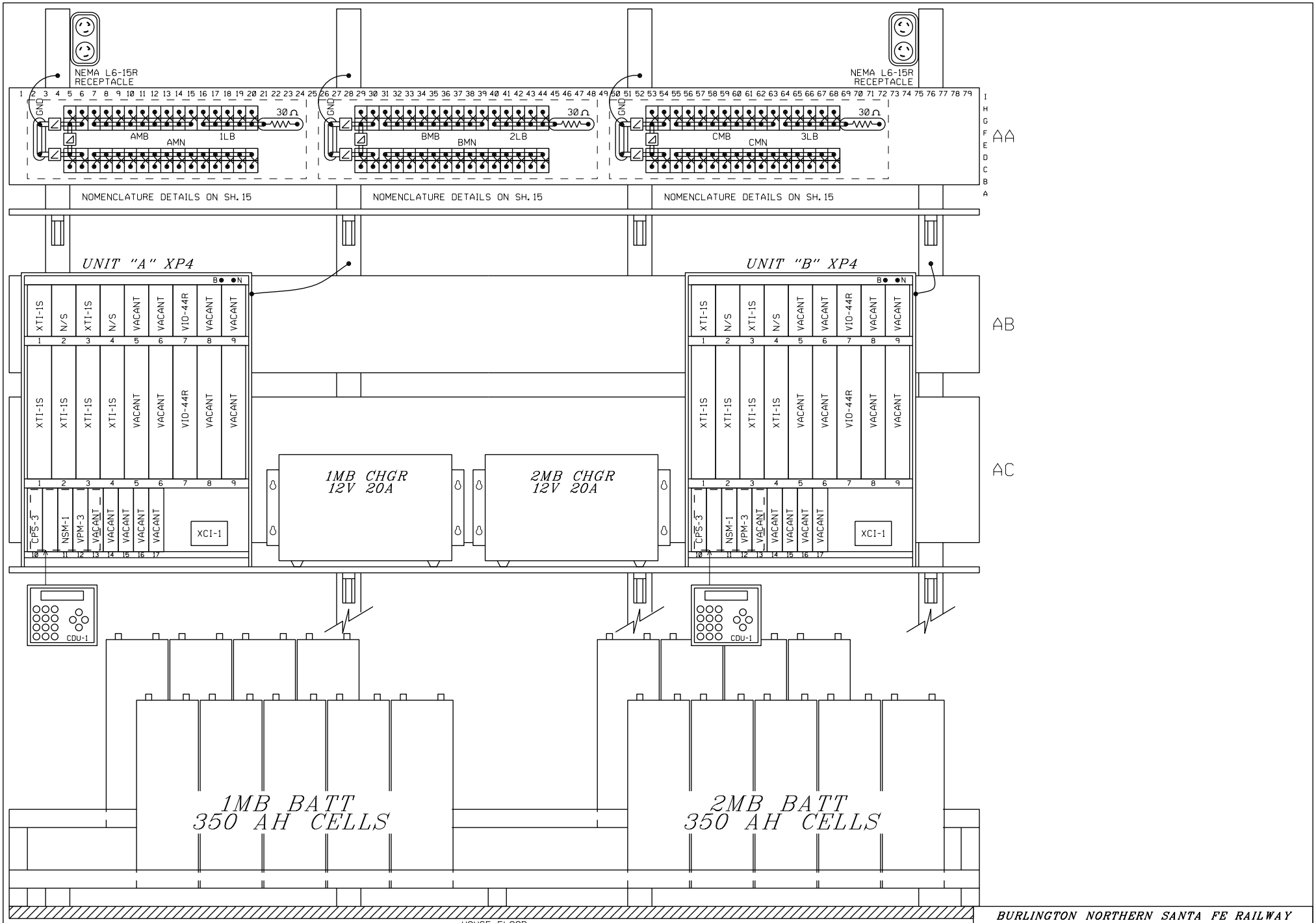

ALL NEW

BURLINGTON NORTHERN SANTA FE RAILWAY

SIDE "A" SHELF LAYOUT
REMOTE CROSSING GALESBURG, IL

DESIGNED 06-15-11 GALESBURG 2011 TCS/JML SEQ.# 47149

LS 0001 | MP 162.56 | SH 13 OF 16

PRELIMINARY

0001162_56x13c_.dgn June 15, 2011

PLAN MUST NOT BE MODIFIED WITHOUT APPROVAL OF SIGNAL ENGINEERING COPYRIGHT 2011 BNSF RAILWAY COMPANY. ALL RIGHTS RESERVED.

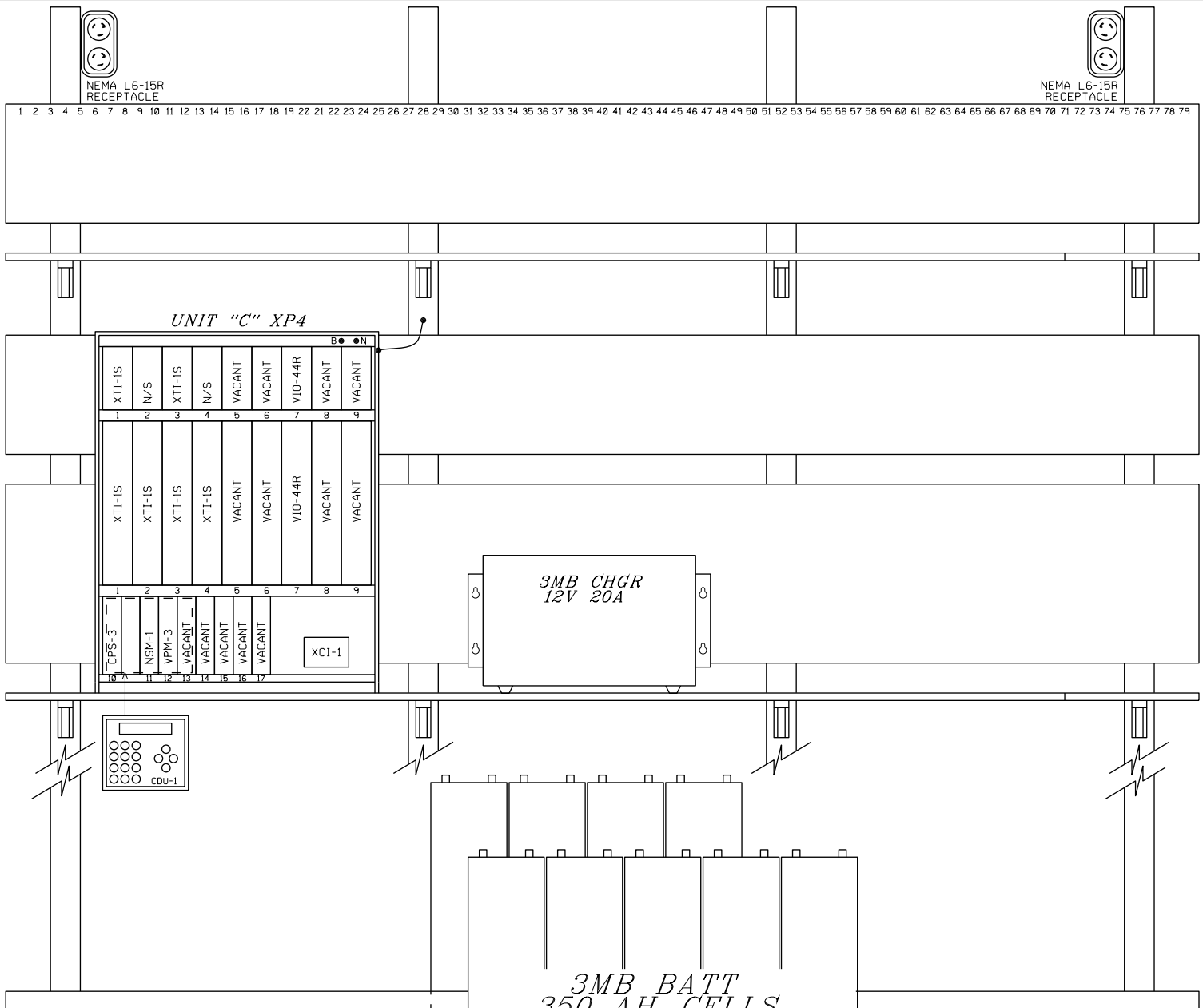

HOUSE FLOOR
SIDE C

ALL NEW

BURLINGTON NORTHERN SANTA FE RAILWAY

SIDE "C" SHELF LAYOUT
REMOTE CROSSING GALESBURG, IL

DESIGNED 06-15-11
GALESBURG 2011
TCS/JML SEQ.# 47149

LS 0001 | MP 162.56 | SH 14 OF 16

PRELIMINARY

0001162_56x14c_.dgn June 15, 2011

PLAN MUST NOT BE MODIFIED WITHOUT APPROVAL OF SIGNAL ENGINEERING COPYRIGHT 2012 BNSF RAILWAY COMPANY. ALL RIGHTS RESERVED.

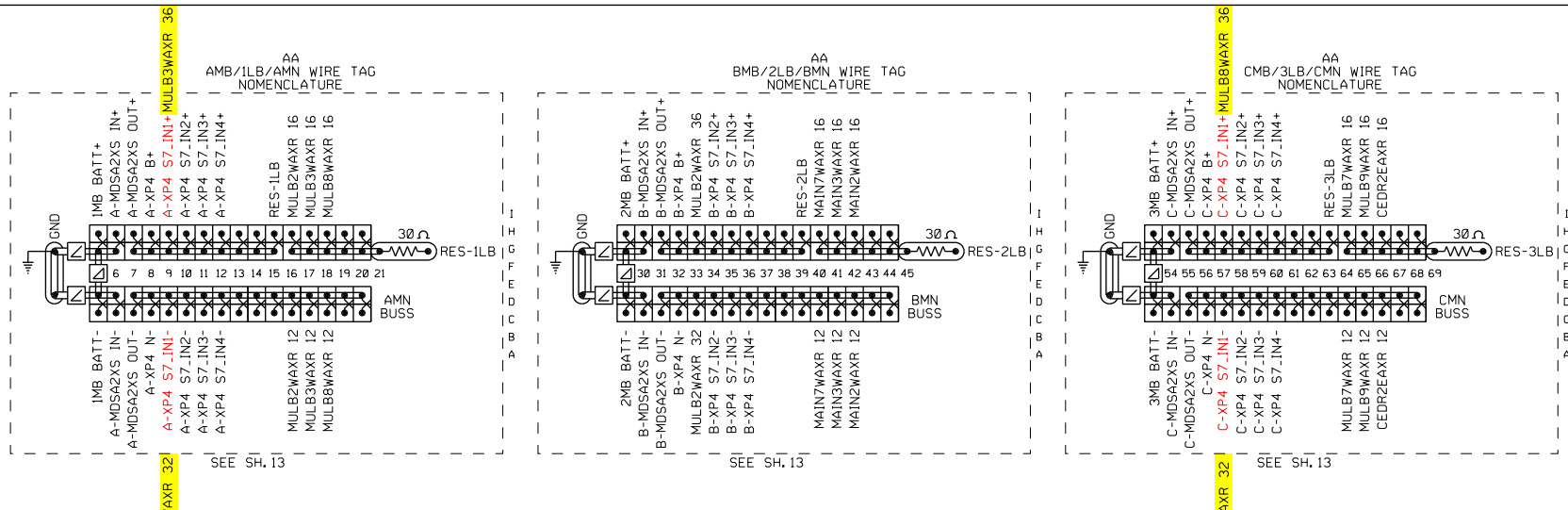

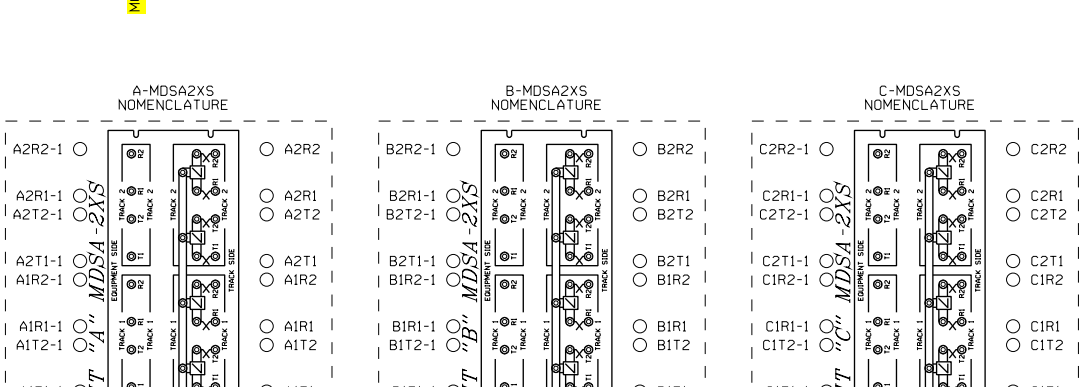

ALL NEW

REVISED 07-23-12

DESIGNED 06-15-11
GALESBURG 2011
TCS/JML SEQ.# 47149

BURLINGTON NORTHERN SANTA FE RAILWAY

NOMECLATURE DETAILS
REMOTE CROSSING GALESBURG, IL

LS 0001 MP 162.56 SH 15 OF 16

RED = IN YELLOW = OUT PRELIMINARY

PLAN MUST NOT BE MODIFIED WITHOUT APPROVAL OF SIGNAL ENGINEERING COPYRIGHT 2011 BNSF RAILWAY COMPANY. ALL RIGHTS RESERVED.

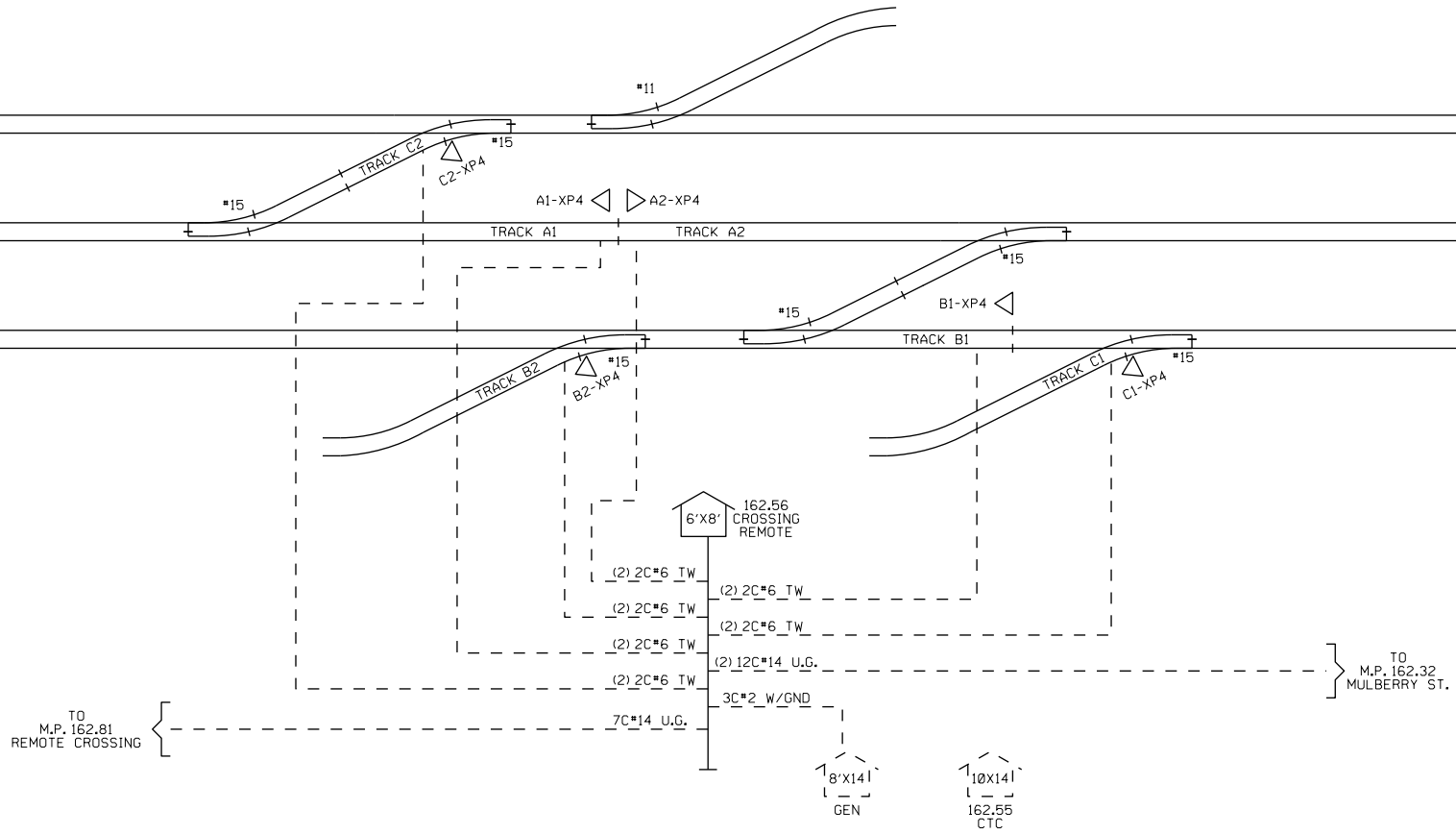

ALL NEW

BURLINGTON NORTHERN SANTA FE RAILWAY		
CABLE LAYOUT REMOTE CROSSING GALESBURG, IL		
LS 0001	MP 162.56	SH 16 OF 16

DESIGNED 06-15-11
GALESBURG 2011
TCS/JML SEQ.# 47149

PRELIMINARY