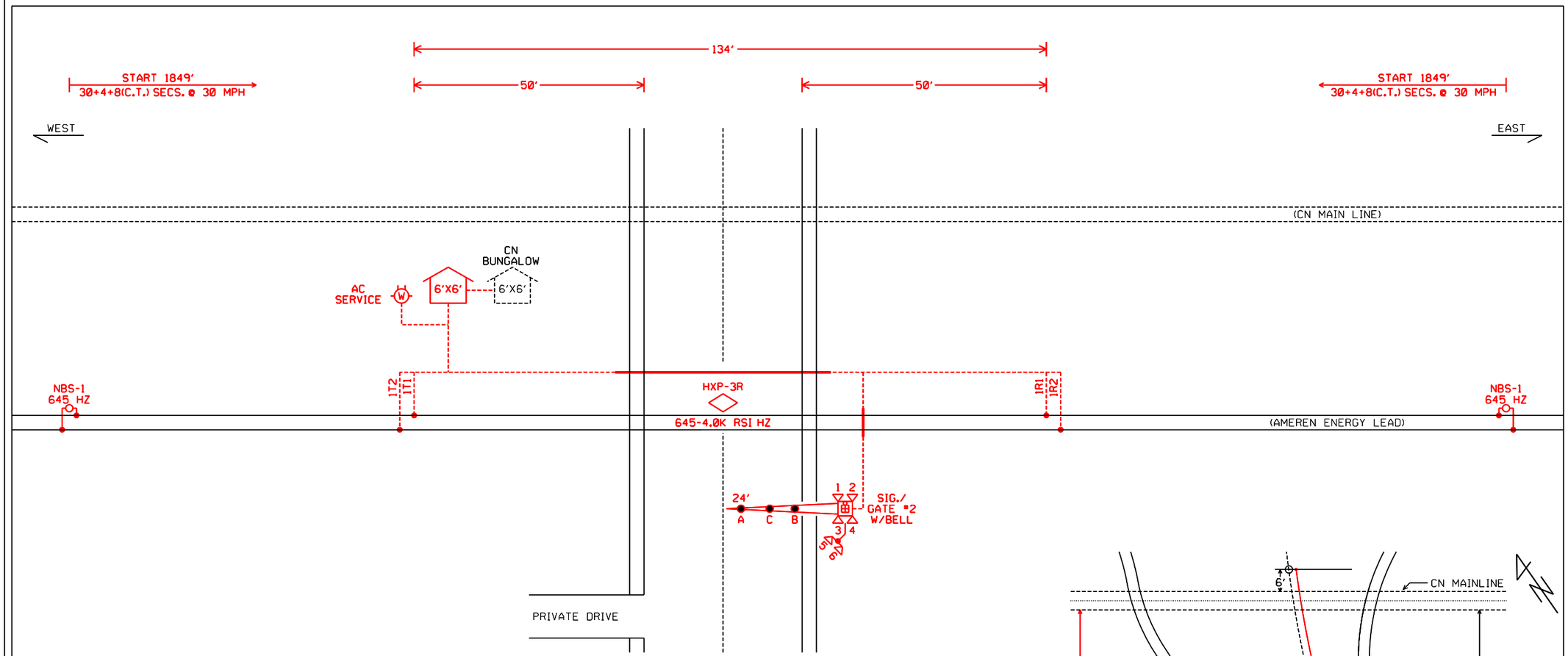

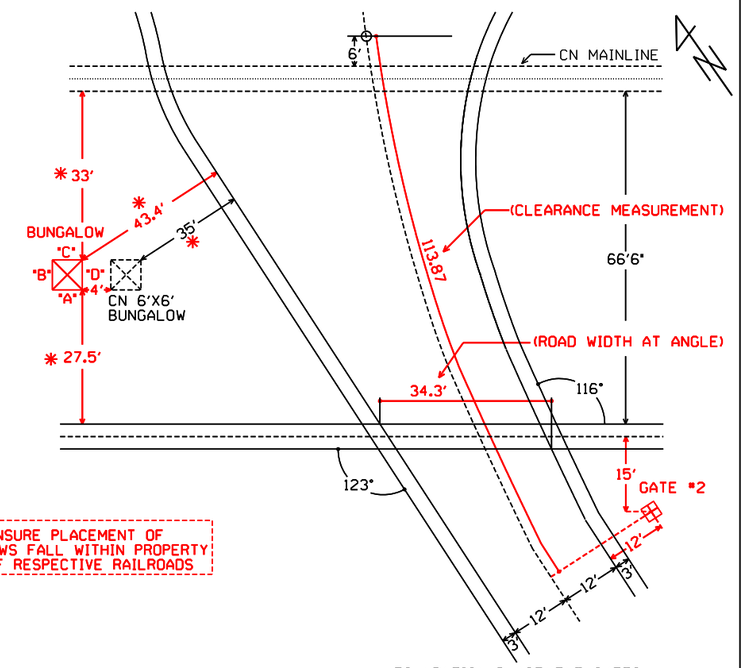

FOUNDATION PLACEMENT SKETCH
NOT TO SCALE

* = FIELD ENSURE PLACEMENT OF BUNGALOWS FALL WITHIN PROPERTY LINES OF RESPECTIVE RAILROADS

CABLE TABULATION

HOUSE TO SIGNAL/GATE #2 - 7C#6 AWG
- 7C#14 AWG
HOUSE TO CN HOUSE - 12C (2#10, 10#14)
HOUSE TO 1T1 & 1T2 - 2C#6 TW. PAIR
HOUSE TO 1R1 & 1R2 - 2C#6 TW. PAIR
HOUSE TO AC SERVICE - 3C#6 AWG

LEGEND

——— CONDUIT - MIN 36" DEEP
------- UNDERGROUND CABLE - MIN 36" DEEP

NOTES:

1. MATERIAL & INSTALLATION TO BE IN ACCORDANCE WITH MUTCD, STATE AND RAILROAD STANDARDS.
2. ALL DIMENSIONS ARE APPROXIMATE AND MAY VARY DUE TO ACTUAL FIELD CONDITIONS.
3. ALL FLASHING LIGHT SIGNALS AND GATE LIGHTS TO BE LIGHT EMITTING DIODE (LED) ASSEMBLIES.

DATE ISSUED: 12/19/12

DSN: 09-27-12 INSV: - -
DESCRIPTION: INSTALL FLS/ GATES, PMD-3R, & 6'X6' BUNGALOW AT CR 900N
DSN: PRS/BKG CHK: PRS/JMW
INSV: / CHK: /

PROGRESS RAIL SERVICES
A Caterpillar Company

AMEREN ENERGY MARKETING

CROSSING CIRCUIT PLAN
CR-900E/BOGOTA ROAD - NEWTON, IL

DOT 292617K | MP X.XX | SH 01 OF 10

AMEXXX_XXx01.dgn September 27, 2012

RED = IN YELLOW = OUT

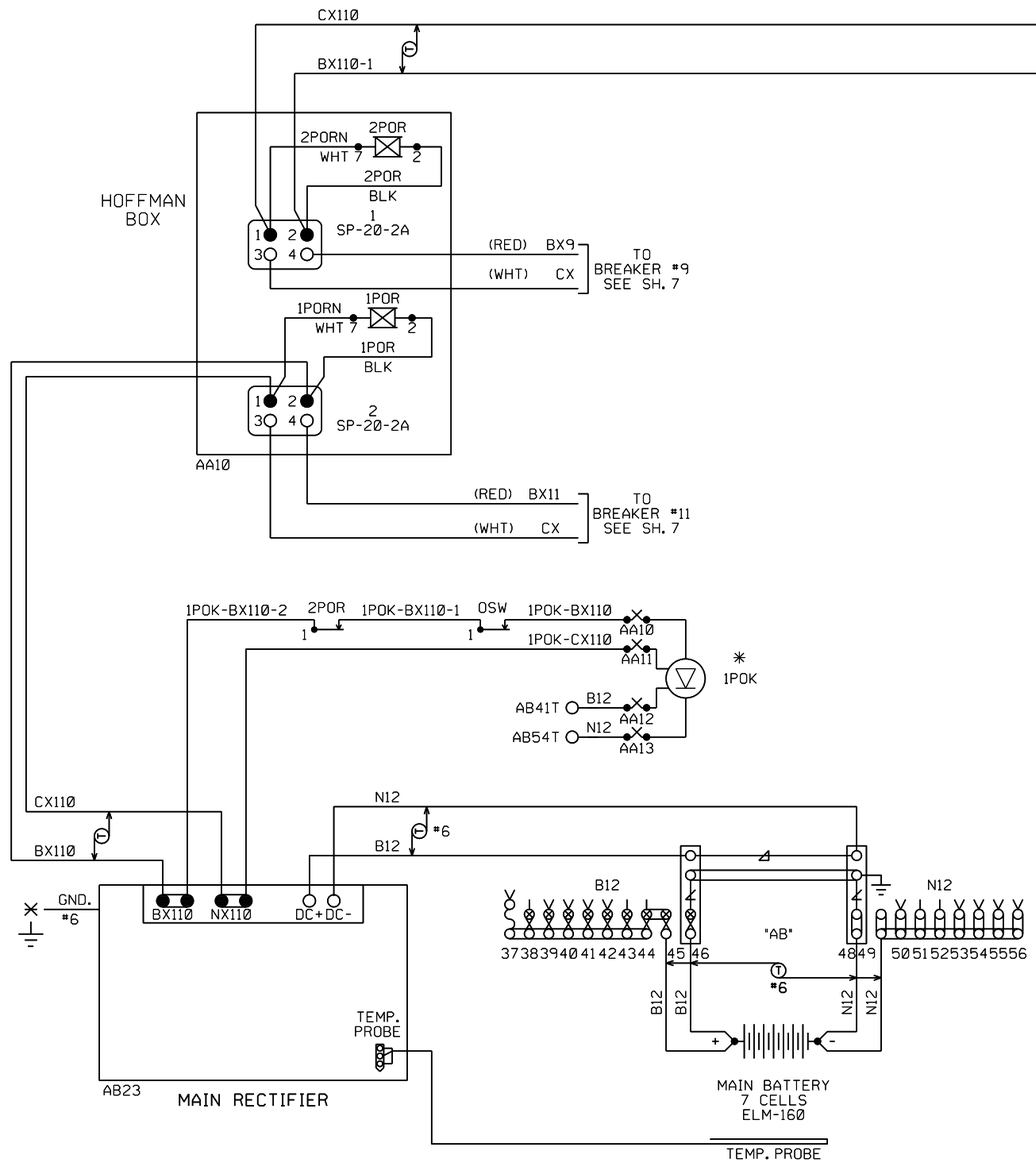

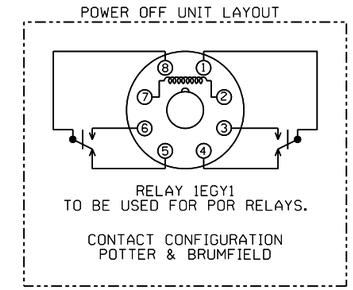

▼= CONTACT USED
V= CONTACT NOT USED

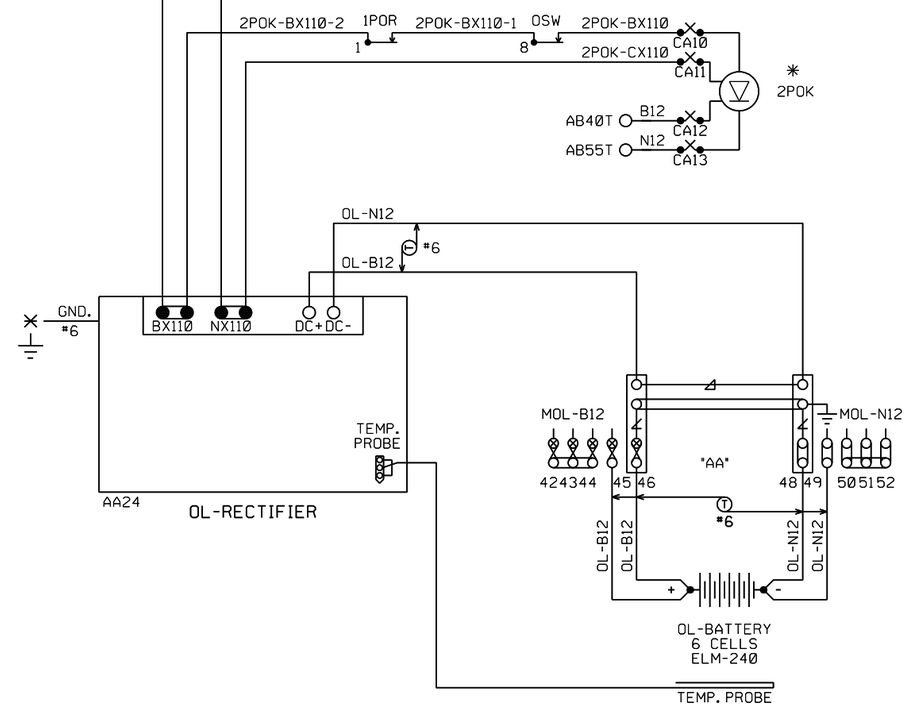

NOTES:

1. ALL WIRE THIS SHEET NO. 10 A.W.G. FLEX UNLESS OTHERWISE NOTED.
2. ✳ = LIGHTS ARE 12VDC, 4-WIRE LED. (P/N: LC2-001WB-WG4) VELCORP GEMS
3. POWER OFF LAMP CONSTANT LIT WHEN:
   - AC POWER ON AND
   - CROSSING IS NOT OUT OF SERVICE

   POWER OFF LAMP FLASHES WHEN:
   - AC POWER OFF OR
   - CROSSING IS OUT OF SERVICE

   POWER OFF LAMP DARK WHEN:
   - ALL POWER OFF

DATE ISSUED: 12/19/12

ALL NEW WORK

DSN: 09-27-12 INSV: - -
DESCRIPTION: INSTALL FLS/ GATES, PMD-3R, & 6'X6' BUNGALOW AT CR 900N
DSN: PRS/BKG CHK: PRS/JMW
INSV: / CHK: /

PROGRESS RAIL SERVICES
A Caterpillar Company

AMEREN ENERGY MARKETING

BATTERY CIRCUITS
CR-900E/BOGOTA ROAD - NEWTON, IL

DOT 292617K | MP X.XX | SH 02 OF 10

AMEX_XXx02.dgn September 27, 2012

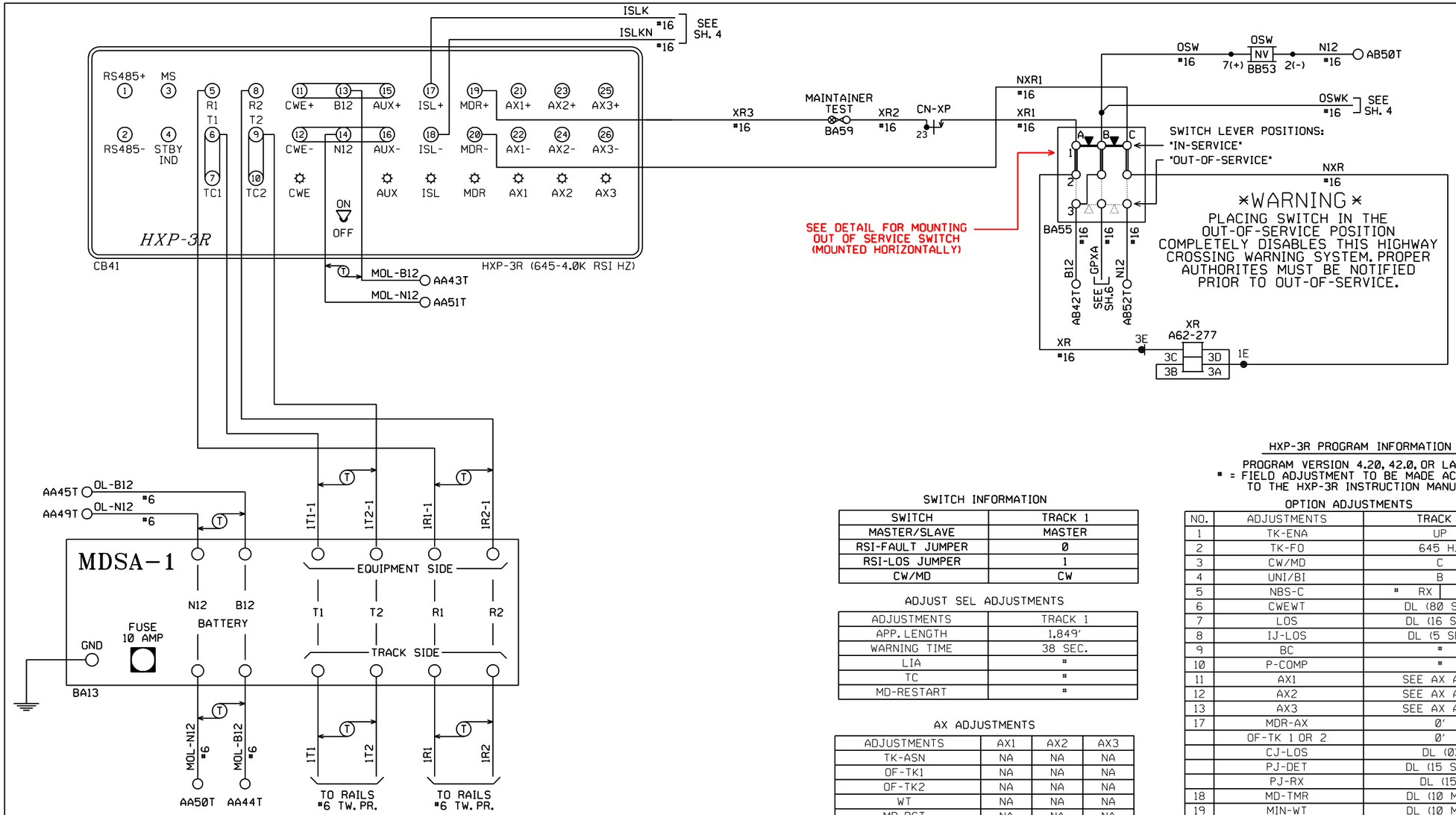

SWITCH INFORMATION

SWITCH	TRACK 1
MASTER/SLAVE	MASTER
RSI-FAULT JUMPER	0
RSI-LOS JUMPER	1
CW/MD	CW

ADJUST SEL ADJUSTMENTS

ADJUSTMENTS	TRACK 1
APP. LENGTH	1,849'
WARNING TIME	38 SEC.
LIA	#
TC	#
MD-RESTART	#

AX ADJUSTMENTS

ADJUSTMENTS	AX1	AX2	AX3
TK-ASN	NA	NA	NA
OF-TK1	NA	NA	NA
OF-TK2	NA	NA	NA
WT	NA	NA	NA
MD-RST	NA	NA	NA
CW/MD	NA	NA	NA
CJ-LOS	NA	NA	NA
PJ-DET	NA	NA	NA
PJ-RX	NA	NA	NA
PDS-ST	NA	NA	NA

FREQUENCY SELECT TRACK 1

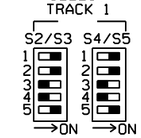

CHANNEL 19
645-HZ

SYSTEM CONFIGURATION TRACK 1

NORMAL APPROACH

HXP-3R PROGRAM INFORMATION

PROGRAM VERSION 4.20, 42.0, OR LATER
* = FIELD ADJUSTMENT TO BE MADE ACCORDING TO THE HXP-3R INSTRUCTION MANUAL.

OPTION ADJUSTMENTS

NO.	ADJUSTMENTS	TRACK 1
1	TK-ENA	UP
2	TK-FO	645 HZ
3	CW/MD	C
4	UNI/BI	B
5	NBS-C	* RX | * FT
6	CWEWT	DL (80 SEC)
7	LOS	DL (16 SEC)
8	IJ-LOS	DL (5 SEC)
9	BC	#
10	P-COMP	#
11	AX1	SEE AX ADJ.
12	AX2	SEE AX ADJ.
13	AX3	SEE AX ADJ.
17	MDR-AX	0'
	OF-TK 1 OR 2	0'
	CJ-LOS	DL (0)
	PJ-DET	DL (15 SEC)
	PJ-RX	DL (15)
18	MD-TMR	DL (10 MIN)
19	MIN-WT	DL (10 MIN)
20	FS-DET	#
	FS-RX	DL (0)
	FS-TM	DL (10 MIN)
21	POS-ST	#
	POS-RX	DL (0)
	POS-TM	DL (0)
22	AR	#
	AR-RX	DL (0)
	AR-TM	DL (10 MIN)
47	ATO-RX	UP
49	PF-ENA	dn

DL = DEFAULT LEVEL
NA = NON APPLICABLE

NOTE:
1. ALL WIRE THIS SHEET NO. 10 A.W.G. FLEX UNLESS OTHERWISE NOTED
2. (T) DENOTES TWISTED PAIR.

DATE ISSUED: 12/19/12

ALL NEW WORK

DSN: 09-27-12 INSV: - -
DESCRIPTION: INSTALL FLS/ GATES, PMD-3R, & 6'X6' BUNGALOW AT CR 900N
DSN: PRS/BKG CHK: PRS/JMW
INSV: / CHK: /

PROGRESS RAIL SERVICES
A Caterpillar Company

AMEREN ENERGY MARKETING

PMD-3 TRACK CIRCUITS
CR-900E/BOGOTA ROAD - NEWTON, IL

DOT 292617K | MP X.XX | SH 03 OF 10

AMEX_XXx03.dgn September 27, 2012

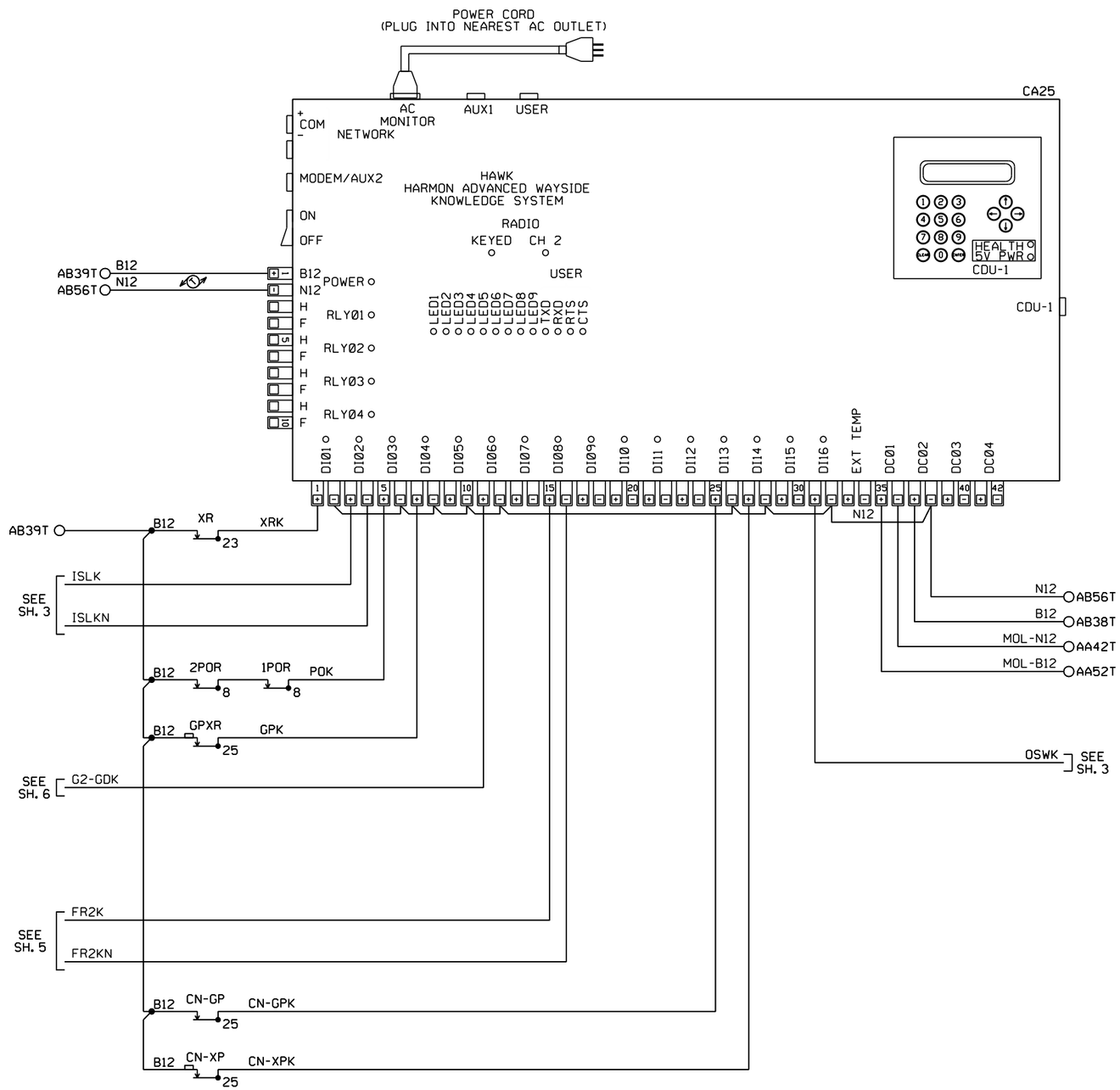

APPLICATION CONFIGURATION INFORMATION DIGITAL INPUTS

INPUT NO.	INPUT DESCRIPTIVE NAME	ID
1	CROSSING RELAY	XRK
2	ISLAND	ISLK
3	AC POWER	POK
4	GATES UP	GPK
5	1 GATE DOWN	G1-GDK
6	2 GATE DOWN	G2-GDK
7	FLASHING LIGHTS 1	FR1K
8	FLASHING LIGHTS 2	FR2K
9	3 GATE DOWN	G3-GDK
10	4 GATE DOWN	G4-GDK
11	FLASHING LIGHTS 3	FR3K
12	FLASHING LIGHTS 4	FR4K
13	CN GATE UP	CN-GPK
14	CN CROSSING RELAY	CN-XPK
15	AUX INPUT	AUX
16	OUT OF SERVICE	OSWK

NOTE:
ALL WIRE THIS SHEET IS #16 AWG. FLEX UNLESS OTHERWISE NOTED.

DATE ISSUED: 12/19/12

ALL NEW WORK

DSN: 09-27-12 INSV: - -
DESCRIPTION: INSTALL FLS/ GATES, PMD-3R, & 6'X6' BUNGALOW AT CR 900N
DSN: PRS/BKG CHK: PRS/JMW
INSV: / CHK: /

PROGRESS RAIL SERVICES
A Caterpillar Company

AMEREN ENERGY MARKETING

HAWK RECORDER
CR-900E/BOGOTA ROAD - NEWTON, IL

DOT 292617K | MP X.XX | SH 04 OF 10

AMEX_XXx04.dgn September 27, 2012

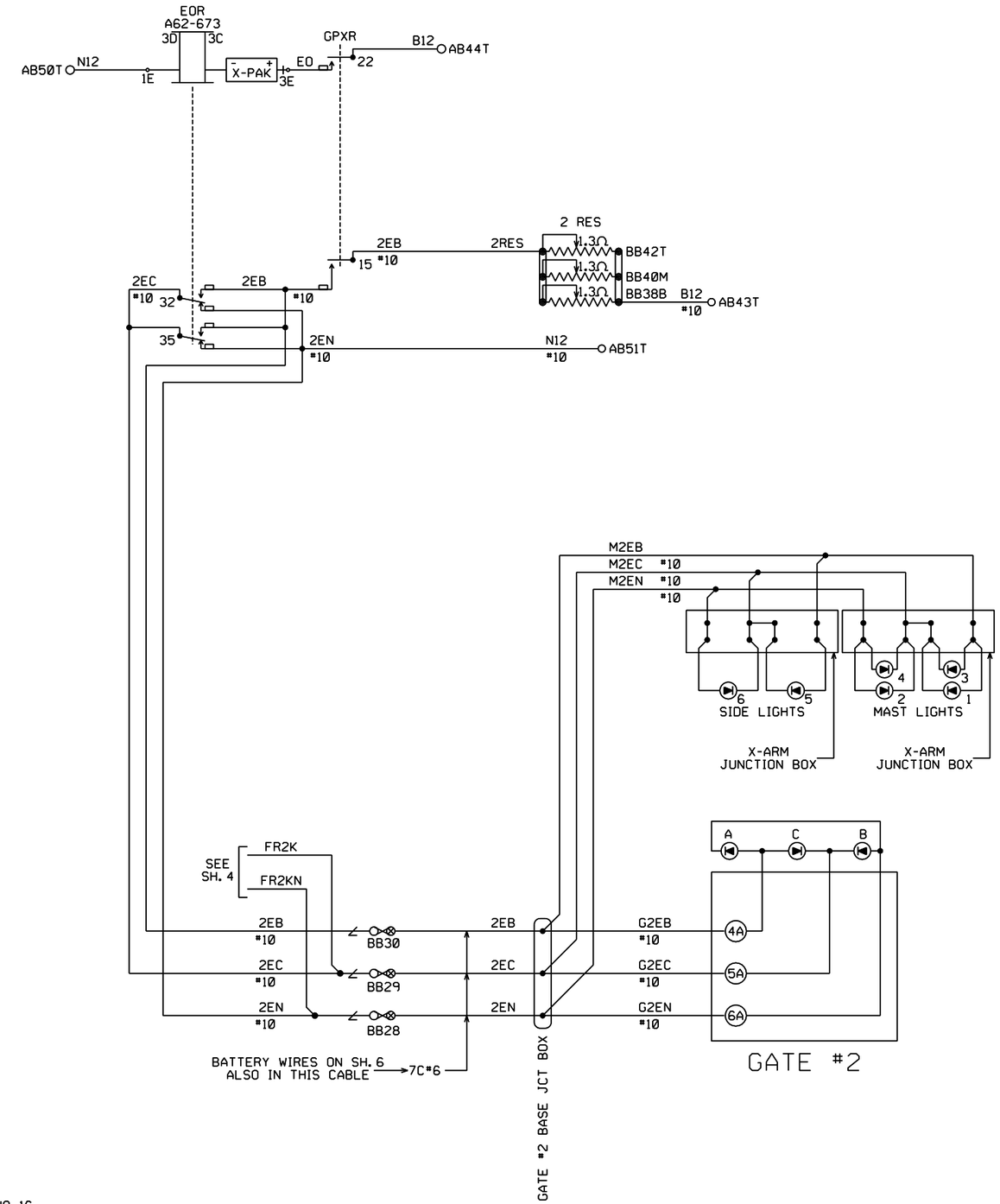

NOTES:

1) ALL WIRE THIS SHEET NO. 16 A.W.G. FLEX UNLESS OTHERWISE NOTED.

DATE ISSUED: 12/19/12

ALL NEW WORK

DSN: 09-27-12 INSV: - -
DESCRIPTION: INSTALL FLS/ GATES, PMD-3R, & 6'X6' BUNGALOW AT CR 900N
DSN: PRS/BKG CHK: PRS/JMW
INSV: / CHK: /

PROGRESS RAIL SERVICES
A Caterpillar Company

AMEREN ENERGY MARKETING

FLASHER CIRCUIT PLAN
CR-900E/BOGOTA ROAD - NEWTON, IL

DOT 292617K | MP X.XX | SH 05 OF 10

AMEX_XXx05.dgn September 27, 2012

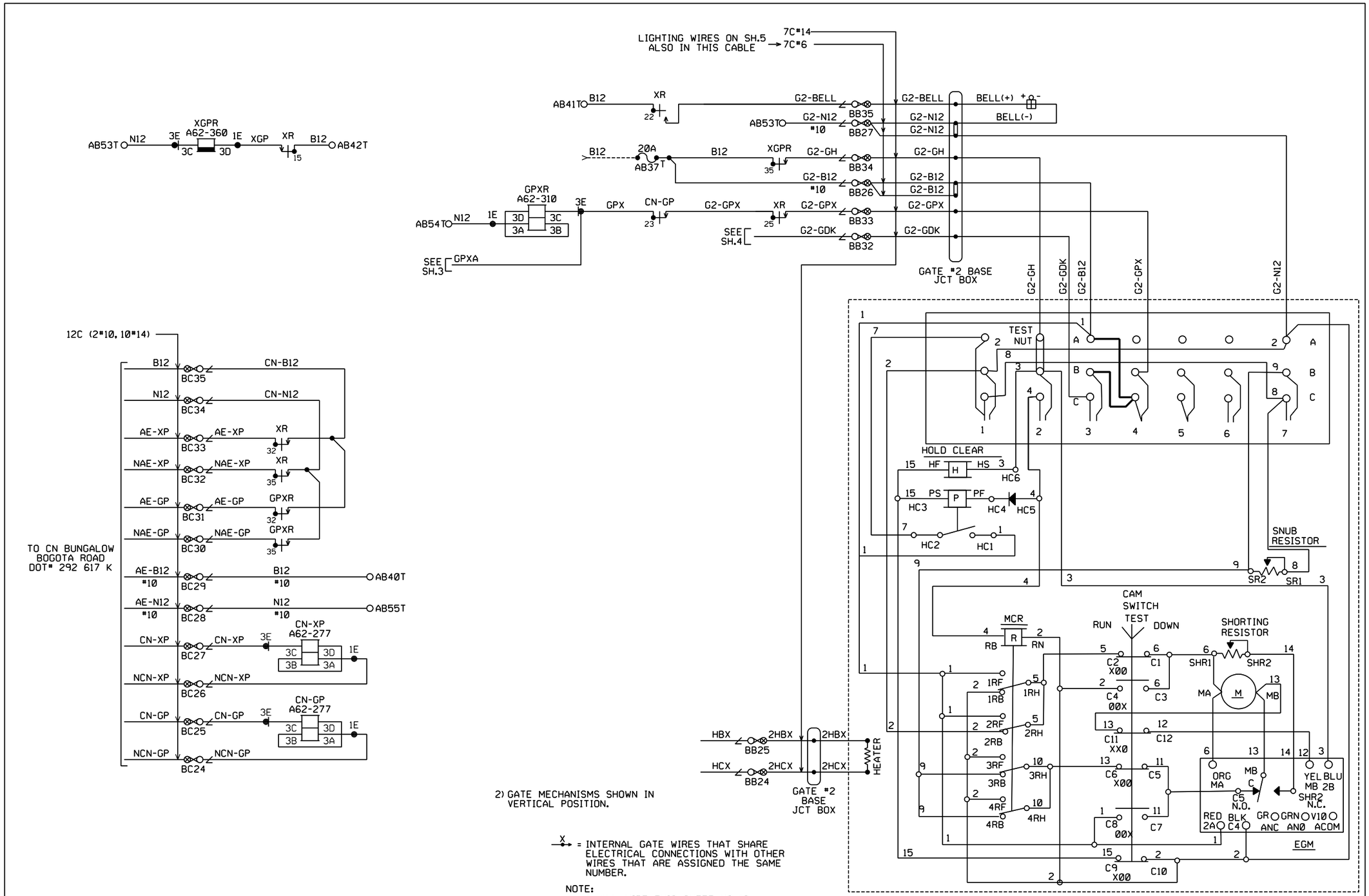

2) GATE MECHANISMS SHOWN IN VERTICAL POSITION.

X = INTERNAL GATE WIRES THAT SHARE ELECTRICAL CONNECTIONS WITH OTHER WIRES THAT ARE ASSIGNED THE SAME NUMBER.

NOTE:
1) ALL WIRE THIS SHEET NO. 16 A.W.G. FLEX UNLESS OTHERWISE NOTED.
2) GATE MECHANISM SHOWN IN VERTICAL POSITION.

DATE ISSUED: 12/19/12

#2 GATE MECHANISM

MODEL "WCH 3597" GATE MECHANISM

ALL NEW WORK

DSN: 09-27-12 INSV: - -
DESCRIPTION: INSTALL FLS/ GATES, PMD-3R, & 6'X6' BUNGALOW AT CR 900N
DSN: PRS/BKG CHK: PRS/JMW
INSV: / CHK: /

PROGRESS RAIL SERVICES
A Caterpillar Company

AMEREN ENERGY MARKETING

GATES 1 & 2 CIRCUIT PLAN
CR-900E/BOGOTA ROAD - NEWTON, IL

DOT 292617K | MP X.XX | SH 06 OF 10

AMEX_XXx06.dgn September 27, 2012

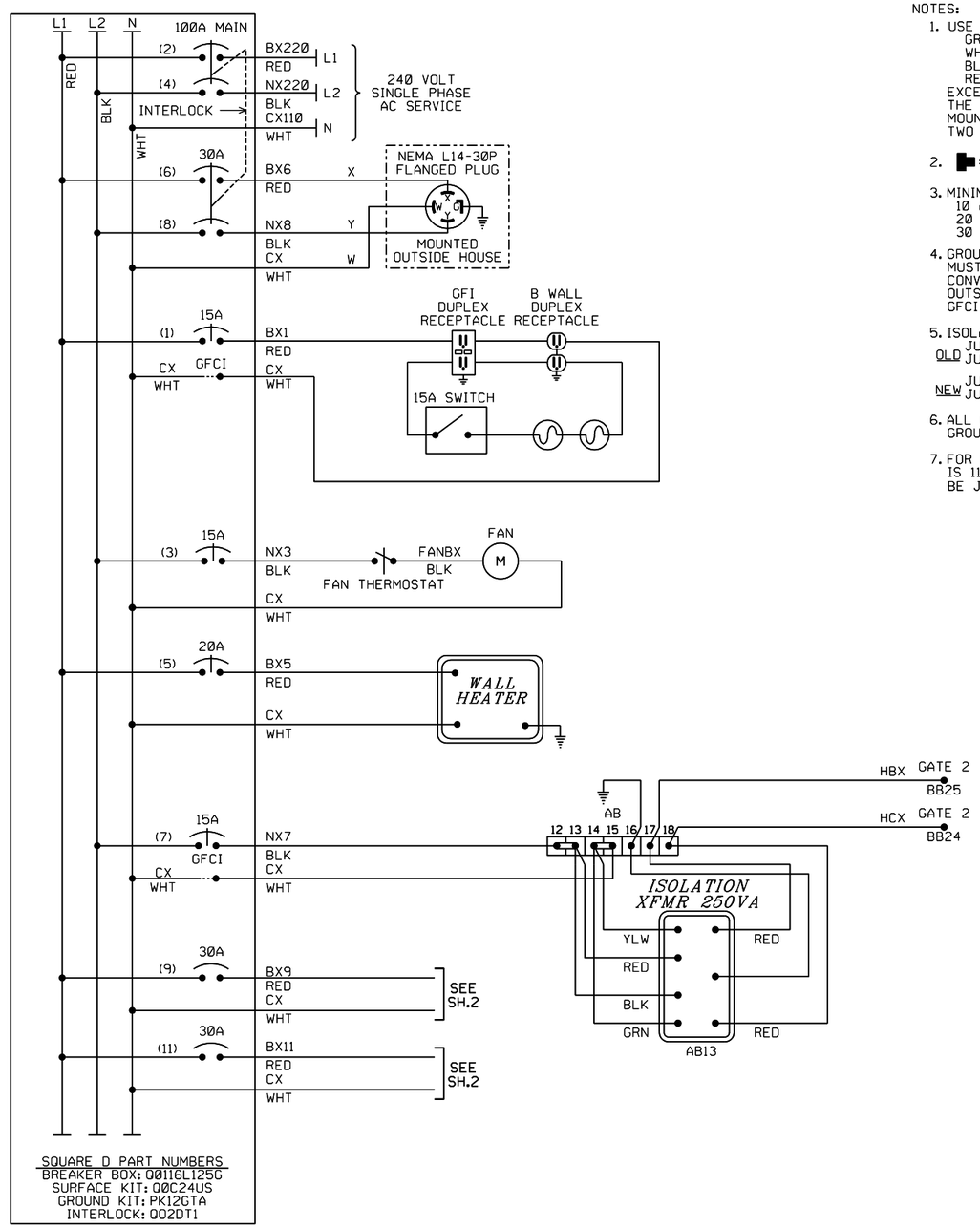

NOTES:

1. USE THE FOLLOWING COLOR CODE:
   GRN - GREEN - SAFETY EQUIPMENT GROUND
   WHT - WHITE - CX110 (NEUTRAL)
   BLK - BLACK - NX220 (L2)
   RED - RED - BX220 (L1)
   EXCEPTIONS TO THE ABOVE COLOR CODE ARE THE PRE-WIRED, SEALED ARRESTOR UNITS MOUNTED ON THE BREAKER BOX WHICH HAVE TWO BLACK AND ONE WHITE WIRE EACH.
2. = WIRE NUT
3. MINIMUM WIRE SIZE
   10 AMP - NO. 14 AWG THHN OR THWN SOLID
   20 AMP - NO. 12 AWG THHN OR THWN SOLID
   30 AMP - NO. 10 AWG THHN OR THWN SOLID
4. GROUND FAULT INTERRUPT (GFCI) MUST BE USED ON ALL CIRCUITS SERVING CONVENIENCE OUTLETS AND ANY EQUIPMENT OUTSIDE THE BUNGALOW. RECEPTACLE MOUNTED GFCI MAY BE USED INSTEAD OF BREAKER TYPE.
5. ISOLATION TRANSFORMER IF INSTALLED.
   OLD JUMPER WIRES BLK/YEL TO BLK/GRN WITH CX (WHT)
   JUMPER WIRES BLK TO BLK/RED WITH NX7 (BLK)
   NEW JUMPER WIRES YEL TO BRN WITH CX (WHT)
   JUMPER WIRES BLK TO BLU WITH NX7 (BLK)
6. ALL GROUND WIRES RUN TO BREAKER BOX GROUND BUSS
7. FOR LOCATIONS WHERE SERVICE PROVIDED IS 110 VOLT THEN BREAKER 2 SHOULD BE JUMPERED TO BREAKER 4.

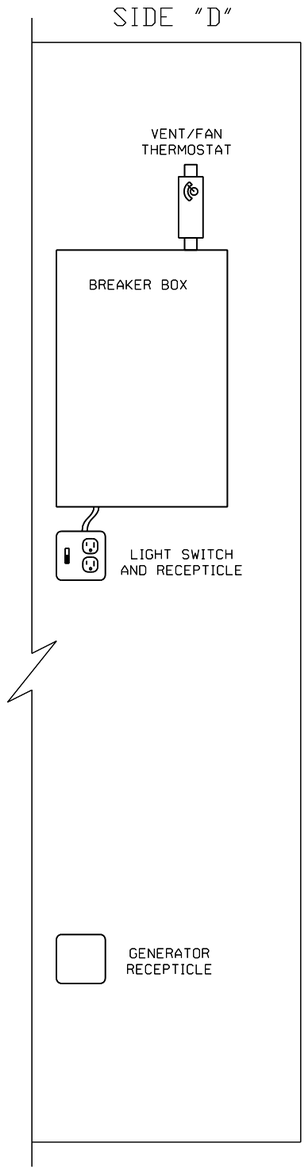

DATE ISSUED: 12/19/12

ALL NEW WORK

DSN: 09-27-12 INSV: - -
DESCRIPTION: INSTALL FLS/ GATES, PMD-3R, & 6'X6' BUNGALOW AT CR 900N
DSN: PRS/BKG CHK: PRS/JMW
INSV: / CHK: /

PROGRESS RAIL SERVICES
A Caterpillar Company

AMEREN ENERGY MARKETING

POWER DISTRIBUTION PLAN
CR-900E/BOGOTA ROAD - NEWTON, IL

DOT 292617K | MP X.XX | SH 07 OF 10

AMEX_XXx07.dgn September 27, 2012

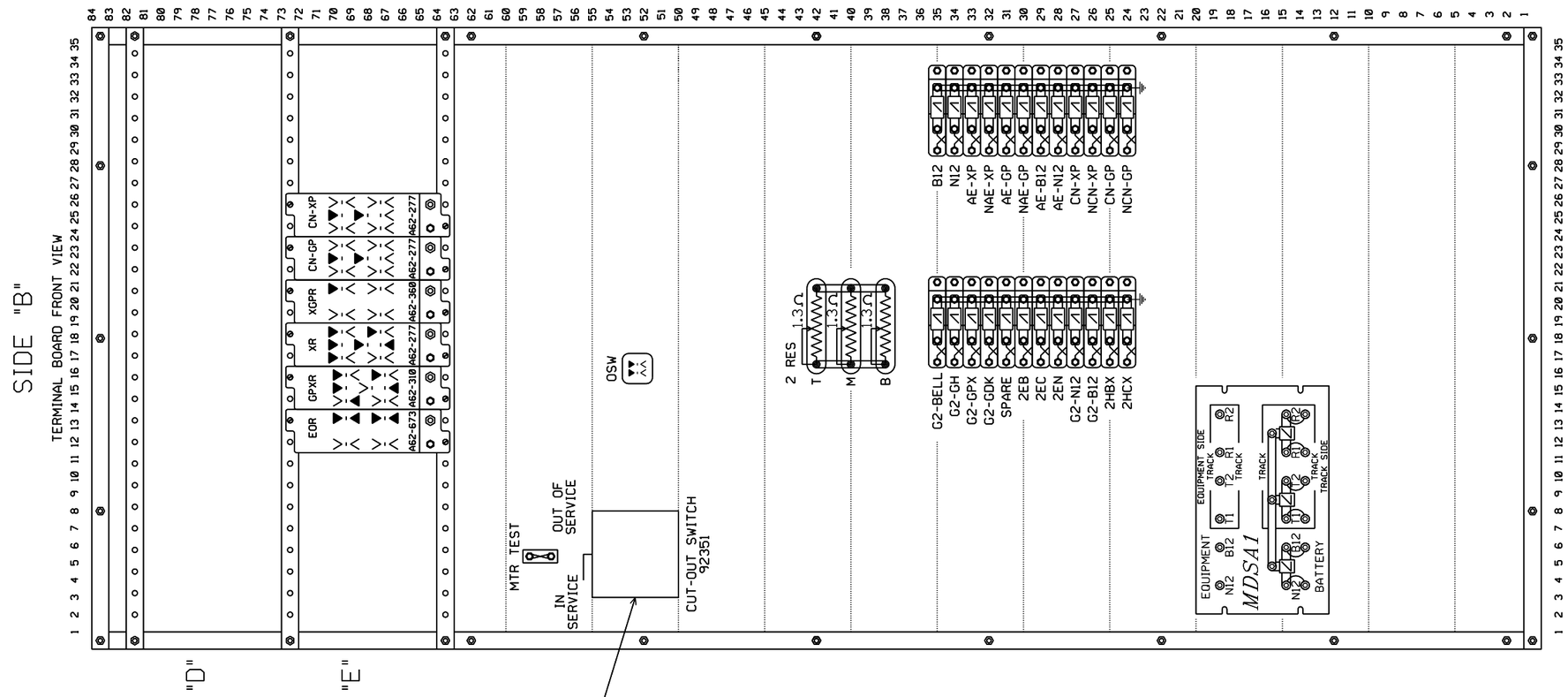

WARNING

PLACING SWITCH IN THE
OUT-OF-SERVICE POSITION COMPLETELY
DISABLES THIS HIGHWAY CROSSING
WARNING SYSTEM. PROPER AUTHORITIES
MUST BE NOTIFIED PRIOR TO OUT-OF-SERVICE.

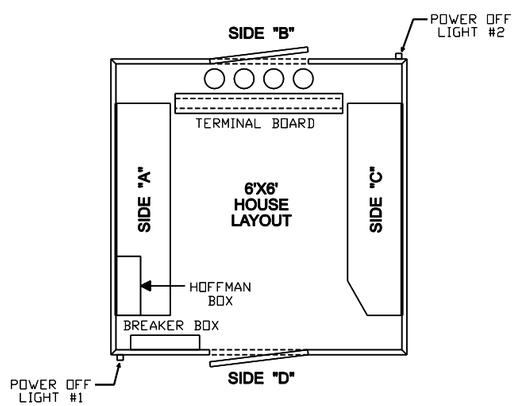

RELAY CROSS REFERENCE

GRS	SAFETRAN
A62-277	400004
A62-310	400020
A62-360	400200
A62-673	

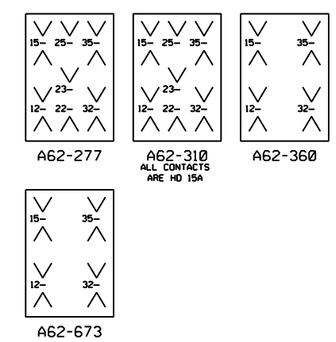

▼ = CONTACT USED

V = CONTACT NOT USED

DATE ISSUED: 12/19/12

ALL NEW WORK

DSN: 09-27-12 INSV: - -
DESCRIPTION: INSTALL FLS/ GATES, PMD-3R, & 6'X6' BUNGALOW AT CR 900N
DSN: PRS/BKG CHK: PRS/JMW
INSV: / CHK: /

PROGRESS RAIL SERVICES
A Caterpillar Company

AMEREN ENERGY MARKETING

TERMINAL BOARD LAYOUT
CR-900E/BOGOTA ROAD - NEWTON, IL

DOT 292617K | MP X.XX | SH 08 OF 10

AMEX_XXx08.dgn September 27, 2012

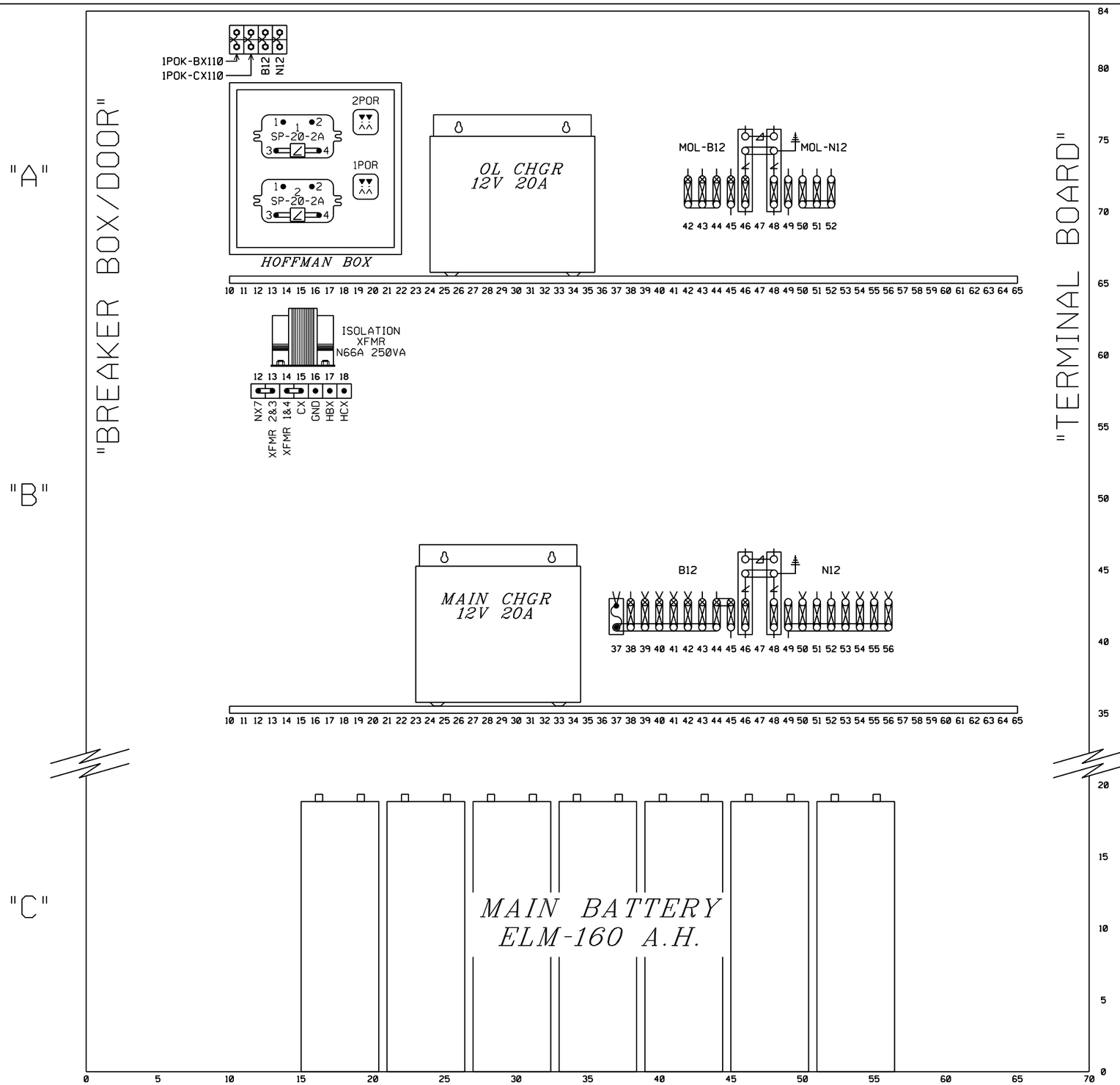

SIDE "A"

DATE ISSUED: 12/19/12

ALL NEW WORK

DSN: 09-27-12 INSV: - -
DESCRIPTION: INSTALL FLS/
GATES, PMD-3R, & 6'X6'
BUNGALOW AT CR 900N
DSN: PRS/BKG CHK: PRS/JMW
INSV: / CHK: /

PROGRESS RAIL SERVICES
A Caterpillar Company

AMEREN ENERGY MARKETING

SIDE "A" SHELF LAYOUT
CR-900E/BOGOTA ROAD - NEWTON, IL

DOT 292617K | MP X.XX | SH 09 OF 10

AMEX_XXx09.dgn September 27, 2012

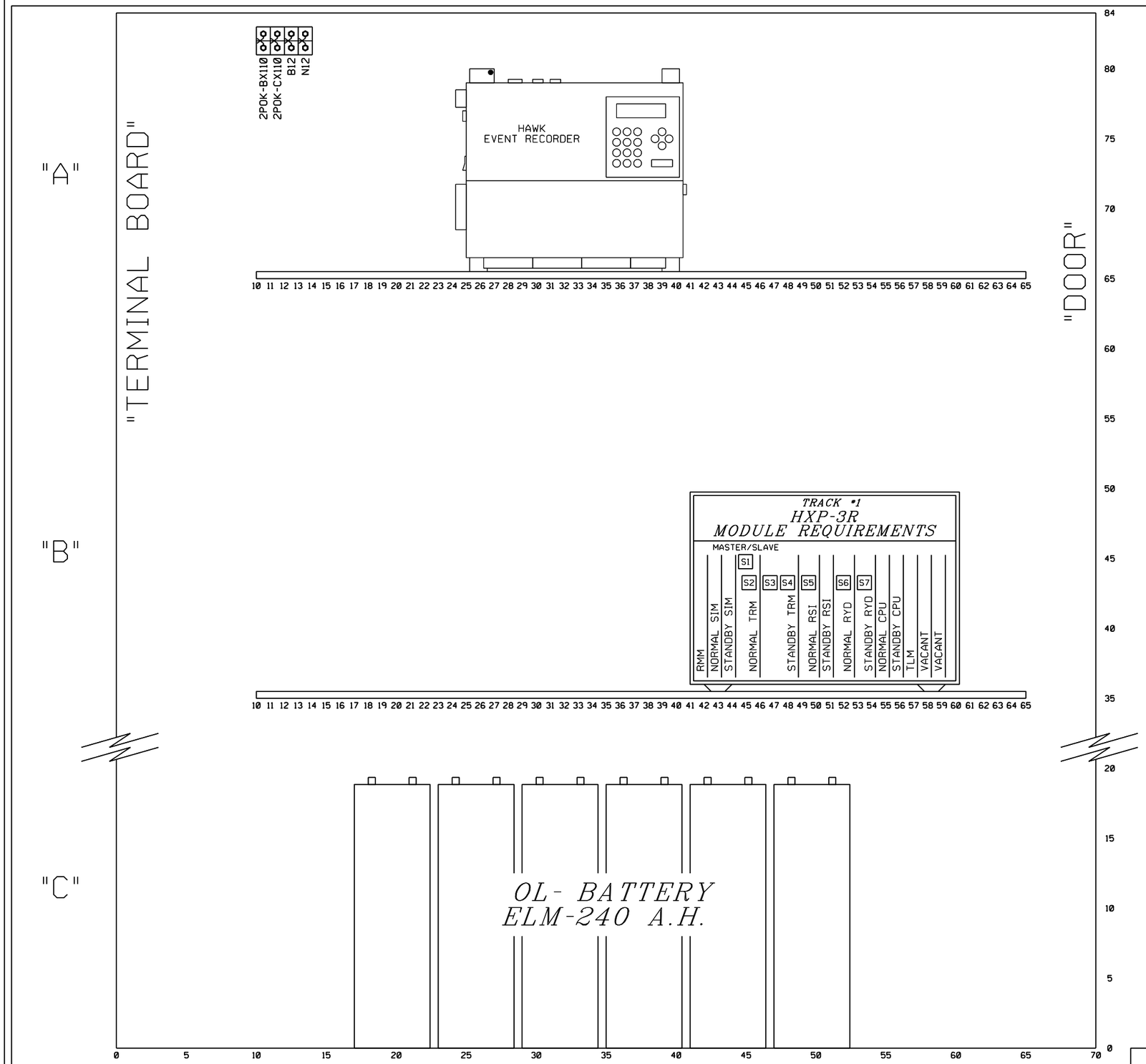

SIDE "C"

DATE ISSUED: 12/19/12

ALL NEW WORK

DSN: 09-27-12 INSV: - -
DESCRIPTION: INSTALL FLS/ GATES, PMD-3R, & 6'X6' BUNGALOW AT CR 900N
DSN: PRS/BKG CHK: PRS/JMW
INSV: / CHK: /

PROGRESS RAIL SERVICES
A Caterpillar Company

AMEREN ENERGY MARKETING

SIDE "C" SHELF LAYOUT
CR-900E/BOGOTA ROAD - NEWTON, IL

DOT 292617K | MP X.XX | SH 10 OF 10

AMEX_XXx10.dgn September 27, 2012