PLAN MUST NOT BE MODIFIED WITHOUT APPROVAL OF SIGNAL ENGINEERING COPYRIGHT 2012 BNSF RAILWAY COMPANY. ALL RIGHTS RESERVED.

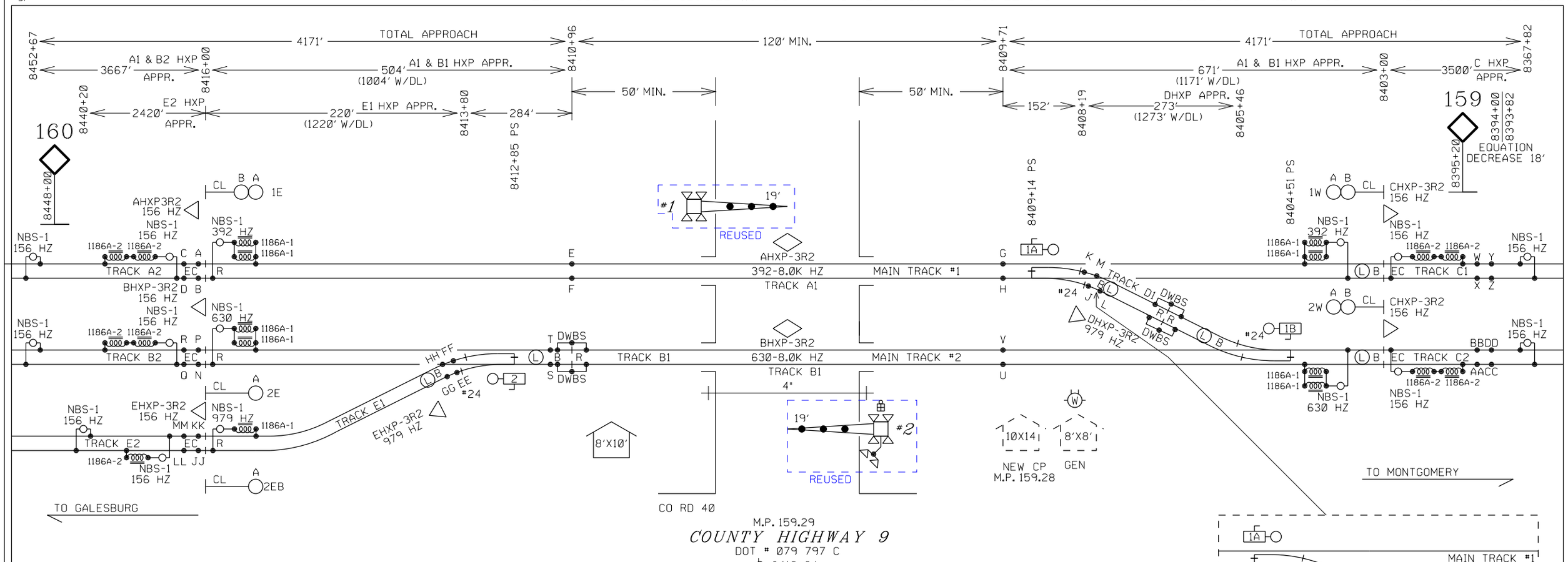

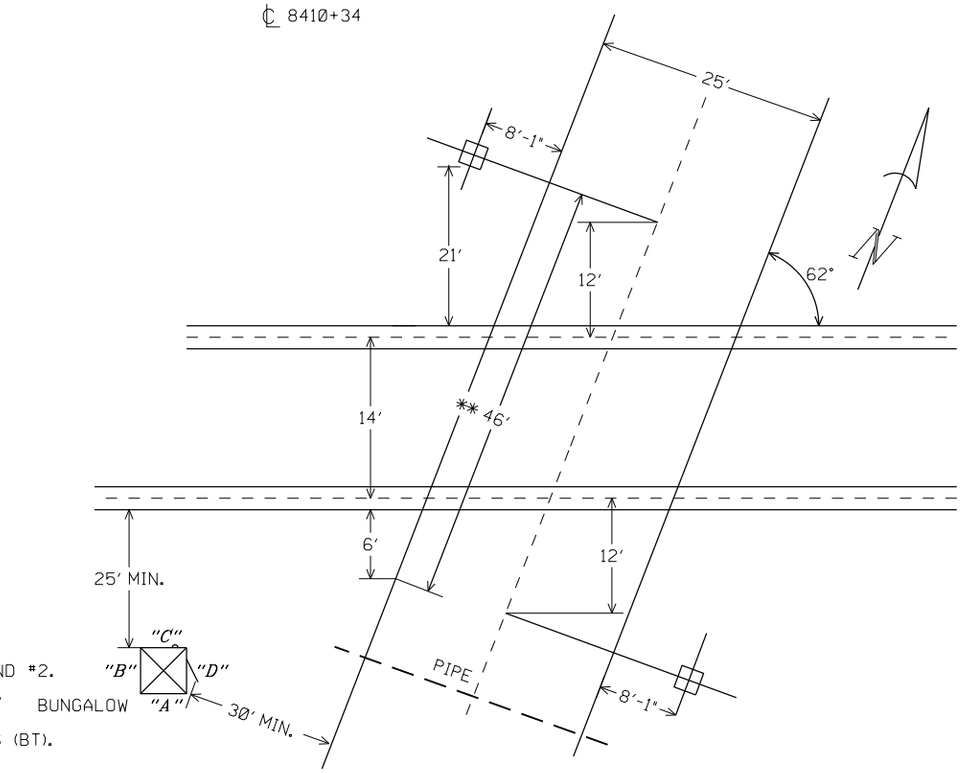

FOUNDATION PLACEMENT SKETCH
NOT TO SCALE

**ESTIMATED CLEARANCE DISTANCE

NOTES:

EQUIPMENT IS DESIGNED FOR 20 SECONDS MINIMUM WARNING TIME AT 79 MPH MAIN #1 AND #2.
EQUIPMENT IS DESIGNED FOR 20 SECONDS MINIMUM WARNING TIME AT 50 MPH E1 AND E2.
APPROACHES WERE LENGTHENED 2 SECOND(S) FOR WIDE OR ANGLED CROSSING (CT).
APPROACHES WERE LENGTHENED 10 SECONDS FOR SPEED VARIANCE AND BALLAST CHANGES (BT).
APPROACHES WERE LENGTHENED 4 SECONDS FOR EQUIPMENT RESPONSE TIME (ERT).
ALL FRONT LENS TO BE 30° TO 15° OR LED.
ALL BACK LENS TO BE 70° OR LED.
GATE LENGTH SHOWN IS MEASURED FROM MAST C/L TO GATE TIP.
ALL LAMPS TO BE LED.

NOTES:

-TEST TERMINAL
-EQUALIZER
-LINE ARRESTER
-HEAVY DUTY ARRESTER
-TWISTED WIRE 2 TURNS PER FOOT
-CONNECTION TO REC./RTU

ALL WIRES #16 AWG UNLESS OTHERWISE NOTED

ALL NEW

REVISED 12-11-12
REVISED 03-30-12
DESIGNED 06-15-11
GALESBURG 2011
TCS/JML SEQ.# 47149

BURLINGTON NORTHERN SANTA FE RAILWAY

CROSSING CIRCUIT PLAN
COUNTY HWY 9 GALESBURG, IL

LS 0001 | MP 159.29 | SH 01 OF 23

0001159_29x01c_.dgn December 11, 2012

BLUE = REUSED RED = IN YELLOW = OUT

PRELIMINARY

PLAN MUST NOT BE MODIFIED WITHOUT APPROVAL OF SIGNAL ENGINEERING COPYRIGHT 2012 BNSF RAILWAY COMPANY. ALL RIGHTS RESERVED.

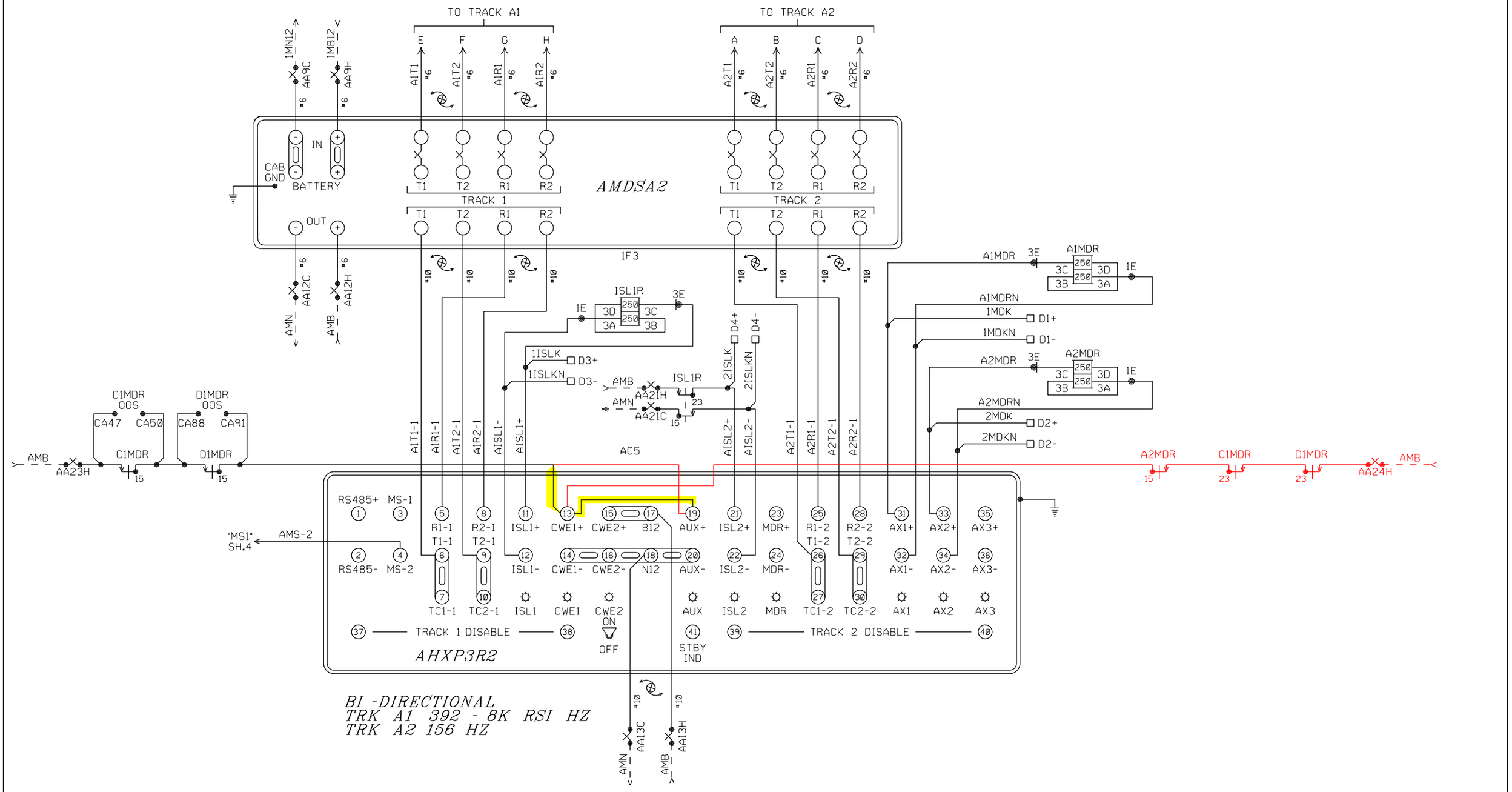

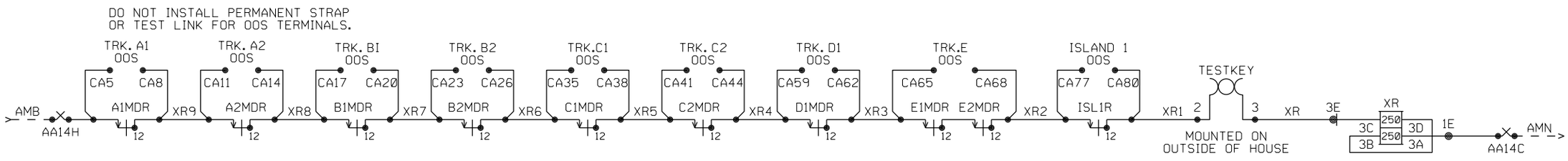

ALL NEW

REVISED 03-30-12

DESIGNED 06-15-11
GALESBURG 2011
TCS/JML SEQ.# 47149

BURLINGTON NORTHERN SANTA FE RAILWAY

AHXP-3R2 TRACK CIRCUITS
COUNTY HWY 9 GALESBURG, IL

LS 0001 | MP 159.29 | SH 02 OF 23

0001159_29x02c_.dgn March 30, 2012

RED = IN YELLOW = OUT

PRELIMINARY

PLAN MUST NOT BE MODIFIED WITHOUT APPROVAL OF SIGNAL ENGINEERING COPYRIGHT 2012 BNSF RAILWAY COMPANY. ALL RIGHTS RESERVED.

PROGRAM INFORMATION

PROGRAM VERSION 42.0 OR LATER

*=FIELD ADJUSTMENT TO BE MADE ACCORDING TO THE HXP-3 INSTRUCTION MANUAL 100052-001 AD0 & SUPPLEMENTS.

HXP-3R2 ADJUST SELECT ADJUSTMENTS

NO.	ADJUSTMENT NAME	TRACK 1	TRACK 2
1	APPROACH LENGTH	671'	3667' 4171'
2	WARNING TIME	99 SEC.	99 SEC.
3	LIA	*	*
4	TC	*	*
5	MD RESTART	*	*

NOTE:

BEFORE PROGRAMMING ANY PARAMETERS/OPTIONS FOR THE HXP GO TO 'OPTION 49' AND RESET ALL LOCAL PARAMETERS TO FACTORY DEFAULT VALUES. SEE HXP-3 MANUAL 100052-001 AD0 PAGE 4-14.

OPTION ADJUSTMENTS

NO.	ABBREVIATION	TRACK 1	TRACK 2
1	TK-ENA	"UP"	"UP"
2	TK FO	392 HZ	156 HZ
3	CW/MD	"C"	"C"
4	UNI-BI	"b" (BI)	"b" (BI)
5	NBS-C	* RX	* RX
		* FEET	* FEET
6	CWEWT	DL (80 SEC.)	DL (80 SEC.)
7	LOS	DL (16 SEC.)	DL (16 SEC.)
8	IJ-LOS	DL (5 SEC.)	DL (5 SEC.)
9	BC	*	*
10	P-COMP	*	*
11	AX1	SEE AX ADJ.	SEE AX ADJ.
12	AX2	SEE AX ADJ.	SEE AX ADJ.
13	AX3	SEE AX ADJ.	SEE AX ADJ.
17	MDR-AX/OF-TK	0'	0'
	CJ-LOS	DL (0)	DL (0)
	PJ-DET	DL (15 SEC.)	DL (15 SEC.)
	PJ-RX	DL (15)	DL (15)
18	MD-TMR	DL (10 MIN.)	DL (10 MIN.)
19	MIN-WT	DL (0)	DL (0)
20	FS-RX	DL (0)	DL (0)
	FS-TM	DL (10 MIN.)	DL (10 MIN.)
21	POS-RX	DL (0)	DL (0)
	POS-TM	DL (0)	DL (0)
22	AR-RX	DL (0)	DL (0)
	AR-TM	DL (10 MIN.)	DL (10 MIN.)
47	ATO-RX	UP	UP
48	PF-ENA	"dn"	"dn"

AX ADJUSTMENTS

NO.	ABBREVIATION	AX 1	AX 2	AX 3
1	TK-ASN	1	2	1,2
2	OF-TK1	0'	NA	NA
3	OF-TK2	NA	504' 0'	NA
4	WT	32 SEC.	32 SEC.	99 SEC.
5	MD-RST	(1)	(0)	(0)
6	CW/MD	"C"	"C"	"C"
7	CJ-LOS	DL (0)	DL (0)	DL (0)
8	PJ-DET	DL (15 SEC.)	DL (15 SEC.)	DL (15 SEC.)
9	PJ-RX	DL (15)	DL (15)	DL (15)
10	POS-ST	"dn"	"dn"	"dn"

SWITCH INFORMATION

SWITCH	TRACK 1	TRACK 2
MASTER/SLAVE	MASTER	MASTER
RSI FAULT JUMPER	0	NA
RSI-LOS JUMPER	1	NA
TLM W1 JUMPER	PINS 1-2	
TLM W2 JUMPER	PINS 1-2	
TLM W3 JUMPER	PINS 2-3	
MINUTE TIMEOUT	5 MIN	
CW/MD	CW	
STANDBY/AUTO/NORMAL	AUTO	

NOTES: DL= DEFAULT LEVEL
NA= NON APPLICABLE

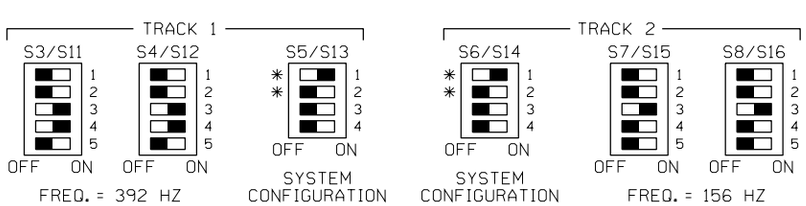

NOTES: FOR S5/S13 AND S6/S14

*1.) ACTUATOR 1 SELECTS NORMAL APPROACH WHEN SET TO ON POSITION.

*2.) WITH ACTUATOR 1 IN OFF POSITION ACTUATOR 2 SELECTS SHORT APPROACH WHEN OFF AND SELECTS VERY SHORT WHEN ON.

3.) ACTUATOR 3 OFF SELECTS HXP OPERATION.

4.) ACTUATOR 4 OFF = NORMAL MUX TABLE
ACTUATOR 4 ON = ALTERNATE MUX TABLE

ALL NEW

REVISED 03-30-11

DESIGNED 06-15-11
GALESBURG 2011
TCS/JML SEQ.# 47149

BURLINGTON NORTHERN SANTA FE RAILWAY

AHXP-3R2 PROGRAM INFORMATION
COUNTY HWY 9 GALESBURG, IL

LS 0001 MP 159.29 SH 03 OF 23

RED = IN YELLOW = OUT

PRELIMINARY

PLAN MUST NOT BE MODIFIED WITHOUT APPROVAL OF SIGNAL ENGINEERING COPYRIGHT 2012 BNSF RAILWAY COMPANY. ALL RIGHTS RESERVED.

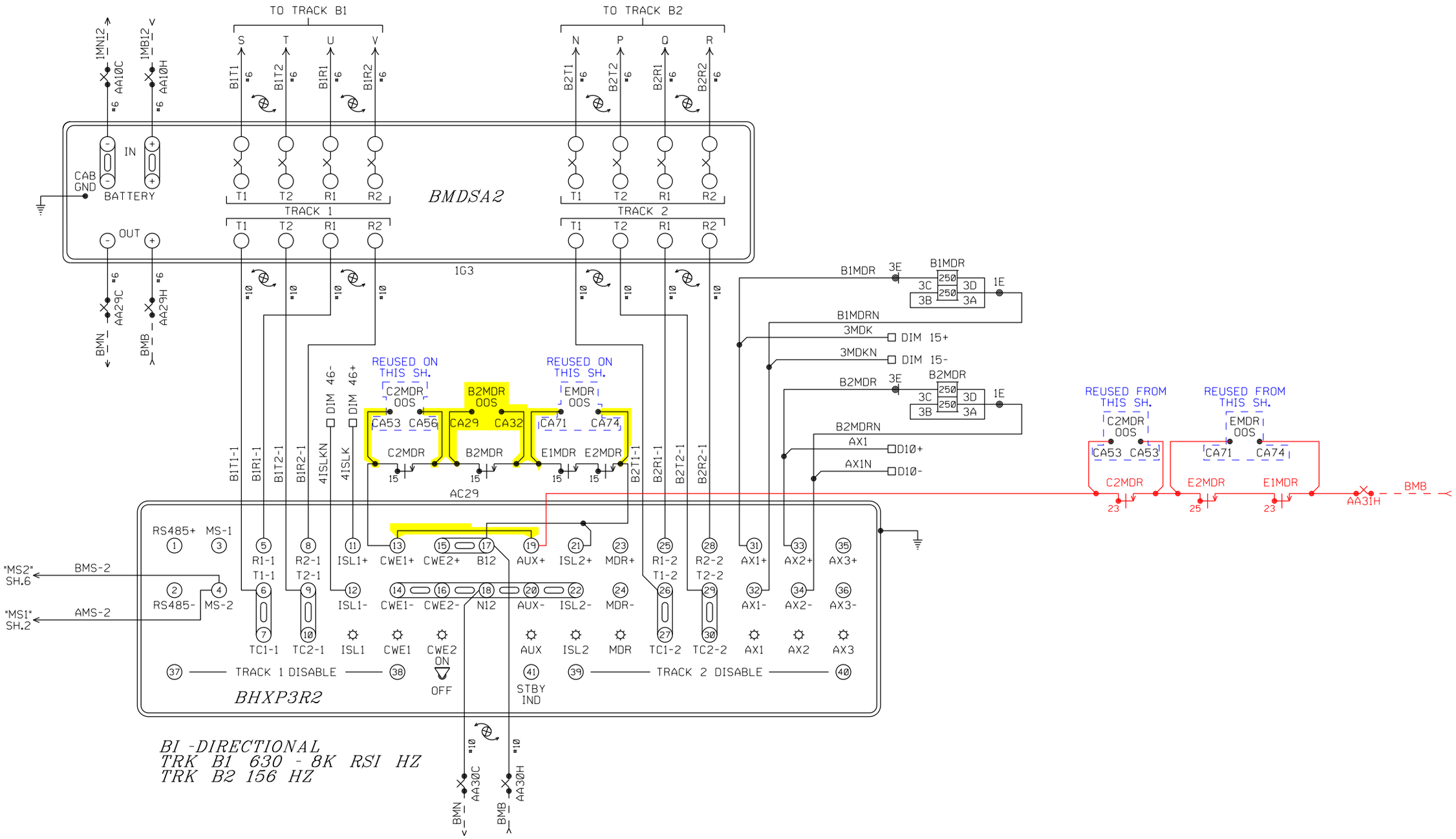

ALL NEW

REVISED 03-30-12

DESIGNED 06-15-11
GALESBURG 2011
TCS/JML SEQ.# 47149

BURLINGTON NORTHERN SANTA FE RAILWAY

BHXP-3R2 TRACK CIRCUITS
COUNTY HWY 9 GALESBURG, IL

LS 0001 | MP 159.29 | SH 04 OF 23

0001159_29x04c_.dgn March 30, 2012

RED = IN YELLOW = OUT

PRELIMINARY

PLAN MUST NOT BE MODIFIED WITHOUT APPROVAL OF SIGNAL ENGINEERING COPYRIGHT 2012 BNSF RAILWAY COMPANY. ALL RIGHTS RESERVED.

PROGRAM INFORMATION

PROGRAM VERSION 42.0 OR LATER

*=FIELD ADJUSTMENT TO BE MADE ACCORDING TO THE HXP-3 INSTRUCTION MANUAL 100052-001 AD0 & SUPPLEMENTS.

HXP-3R2 ADJUST SELECT ADJUSTMENTS

NO.	ADJUSTMENT NAME	TRACK 1	TRACK 2
1	APPROACH LENGTH	671'	3667'
2	WARNING TIME	99 SEC.	99 SEC.
3	LIA	*	*
4	TC	*	*
5	MD RESTART	*	*

NOTE:

BEFORE PROGRAMMING ANY PARAMETERS/OPTIONS FOR THE HXP GO TO 'OPTION 49' AND RESET ALL LOCAL PARAMETERS TO FACTORY DEFAULT VALUES. SEE HXP-3 MANUAL 100052-001 AD0 PAGE 4-14.

OPTION ADJUSTMENTS

NO.	ABBREVIATION	TRACK 1	TRACK 2
1	TK-ENA	"UP"	"UP"
2	TK FO	630 HZ	156 HZ
3	CW/MD	"C"	"C"
4	UNI-BI	"b" (BI)	"b" (BI)
5	NBS-C	* RX	* RX
		* FEET	* FEET
6	CWEWT	DL (80 SEC.)	DL (80 SEC.)
7	LOS	DL (16 SEC.)	DL (16 SEC.)
8	IJ-LOS	DL (5 SEC.)	DL (5 SEC.)
9	BC	*	*
10	P-COMP	*	*
11	AX1	SEE AX ADJ.	SEE AX ADJ.
12	AX2	SEE AX ADJ.	SEE AX ADJ.
13	AX3	SEE AX ADJ.	SEE AX ADJ.
17	MDR-AX/OF-TK	0'	0'
	CJ-LOS	DL (0)	DL (0)
	PJ-DET	DL (15 SEC.)	DL (15 SEC.)
	PJ-RX	DL (15)	DL (15)
18	MD-TMR	DL (10 MIN.)	DL (10 MIN.)
19	MIN-WT	DL (0)	DL (0)
20	FS-RX	DL (0)	DL (0)
	FS-TM	DL (10 MIN.)	DL (10 MIN.)
21	POS-RX	DL (0)	DL (0)
	POS-TM	DL (0)	DL (0)
22	AR-RX	DL (0)	DL (0)
	AR-TM	DL (10 MIN.)	DL (10 MIN.)
47	ATO-RX	UP	UP
48	PF-ENA	"dn"	"dn"

AX ADJUSTMENTS

NO.	ABBREVIATION	AX 1	AX 2	AX 3
1	TK-ASN	1	2	1,2
2	OF-TK1	0'	NA	NA
3	OF-TK2	NA	504'	NA
4	WT	32 SEC.	32 SEC.	99 SEC.
5	MD-RST	(1)	(0)	(0)
6	CW/MD	"C"	"C"	"C"
7	CJ-LOS	DL (0)	DL (0)	DL (0)
8	PJ-DET	DL (15 SEC.)	DL (15 SEC.)	DL (15 SEC.)
9	PJ-RX	DL (15)	DL (15)	DL (15)
10	POS-ST	"dn"	"dn"	"dn"

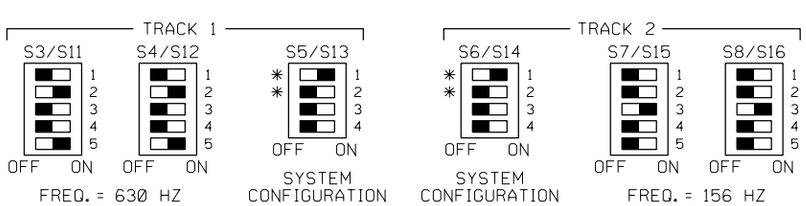

NOTES: FOR S5/S13 AND S6/S14

*1.) ACTUATOR 1 SELECTS NORMAL APPROACH WHEN SET TO ON POSITION.

*2.) WITH ACTUATOR 1 IN OFF POSITION ACTUATOR 2 SELECTS SHORT APPROACH WHEN OFF AND SELECTS VERY SHORT WHEN ON.

3.) ACTUATOR 3 OFF SELECTS HXP OPERATION.

4.) ACTUATOR 4 OFF = NORMAL MUX TABLE
ACTUATOR 4 ON = ALTERNATE MUX TABLE

SWITCH INFORMATION

SWITCH	TRACK 1	TRACK 2
MASTER/SLAVE	MASTER	SLAVE
RSI FAULT JUMPER	0	NA
RSI-LOS JUMPER	1	NA
TLM W1 JUMPER	PINS 1-2	
TLM W2 JUMPER	PINS 1-2	
TLM W3 JUMPER	PINS 2-3	
MINUTE TIMEOUT	5 MIN	
CW/MD	CW	
STANDBY/AUTO/NORMAL	AUTO	

NOTES: DL= DEFAULT LEVEL
NA= NON APPLICABLE

ALL NEW

DESIGNED 06-15-11
GALESBURG 2011
TCS/JML SEQ.# 47149

BURLINGTON NORTHERN SANTA FE RAILWAY

BHXP-3R2 PROGRAM INFORMATION
COUNTY HWY 9 GALESBURG, IL

LS 0001 MP 159.29 SH 05 OF 23

PRELIMINARY

PLAN MUST NOT BE MODIFIED WITHOUT APPROVAL OF SIGNAL ENGINEERING COPYRIGHT 2012 BNSF RAILWAY COMPANY. ALL RIGHTS RESERVED.

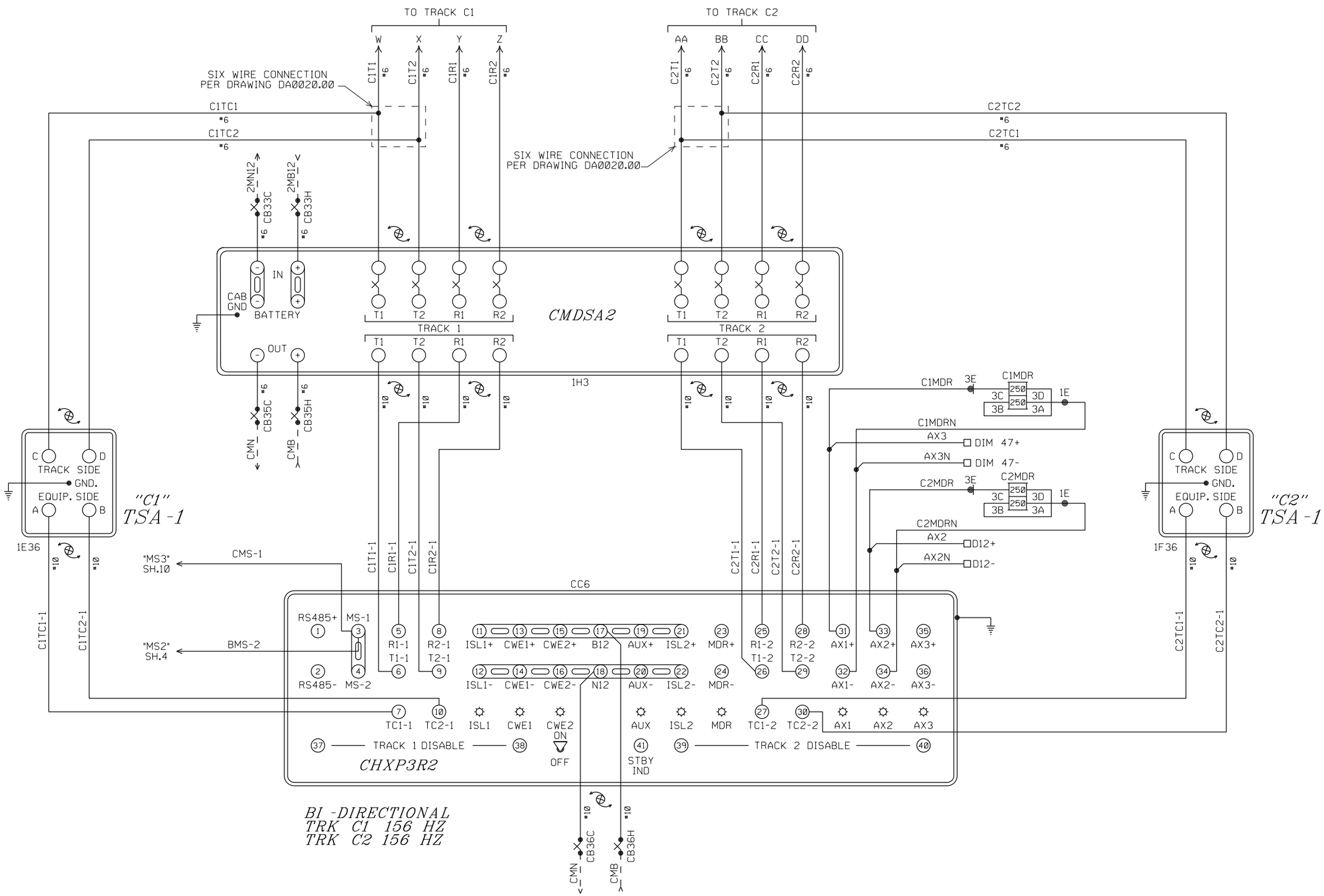

ALL NEW

DESIGNED 06-15-11
GALESBURG 2011
TCS/JML SEQ.# 47149

BURLINGTON NORTHERN SANTA FE RAILWAY

CHXP-3R2 TRACK CIRCUITS
COUNTY HWY 9 GALESBURG, IL

LS 0001 | MP 159.29 | SH 06 OF 23

PRELIMINARY

PLAN MUST NOT BE MODIFIED WITHOUT APPROVAL OF SIGNAL ENGINEERING COPYRIGHT 2012 BNSF RAILWAY COMPANY. ALL RIGHTS RESERVED.

PROGRAM INFORMATION

PROGRAM VERSION 42.0 OR LATER

*=FIELD ADJUSTMENT TO BE MADE ACCORDING TO THE HXP-3 INSTRUCTION MANUAL 100052-001 AD0 & SUPPLEMENTS.

HXP-3R2 ADJUST SELECT ADJUSTMENTS

NO.	ADJUSTMENT NAME	TRACK 1	TRACK 2
1	APPROACH LENGTH	3500'	3500'
2	WARNING TIME	99 SEC.	99 SEC.
3	LIA	*	*
4	TC	*	*
5	MD RESTART	*	*

NOTE:

BEFORE PROGRAMMING ANY PARAMETERS/OPTIONS FOR THE HXP GO TO 'OPTION 49' AND RESET ALL LOCAL PARAMETERS TO FACTORY DEFAULT VALUES. SEE HXP-3 MANUAL 100052-001 AD0 PAGE 4-14.

OPTION ADJUSTMENTS

NO.	ABBREVIATION	TRACK 1	TRACK 2
1	TK-ENA	"UP"	"UP"
2	TK FO	156 HZ	156 HZ
3	CW/MD	"C"	"C"
4	UNI-BI	"b" (BI)	"b" (BI)
5	NBS-C	* RX	* RX
		* FEET	* FEET
6	CWEWT	DL (80 SEC.)	DL (80 SEC.)
7	LOS	DL (16 SEC.)	DL (16 SEC.)
8	IJ-LOS	DL (5 SEC.)	DL (5 SEC.)
9	BC	*	*
10	P-COMP	*	*
11	AX1	SEE AX ADJ.	SEE AX ADJ.
12	AX2	SEE AX ADJ.	SEE AX ADJ.
13	AX3	SEE AX ADJ.	SEE AX ADJ.
17	MDR-AX/OF-TK	0'	0'
	CJ-LOS	DL (0)	DL (0)
	PJ-DET	DL (15 SEC.)	DL (15 SEC.)
	PJ-RX	DL (15)	DL (15)
18	MD-TMR	DL (10 MIN.)	DL (10 MIN.)
19	MIN-WT	DL (0)	DL (0)
20	FS-RX	DL (0)	DL (0)
	FS-TM	DL (10 MIN.)	DL (10 MIN.)
21	POS-RX	DL (0)	DL (0)
	POS-TM	DL (0)	DL (0)
22	AR-RX	DL (0)	DL (0)
	AR-TM	DL (10 MIN.)	DL (10 MIN.)
47	ATO-RX	UP	UP
48	PF-ENA	"dn"	"dn"

AX ADJUSTMENTS

NO.	ABBREVIATION	AX 1	AX 2	AX 3
1	TK-ASN	1	2	1,2
2	OF-TK1	671'	NA	NA
3	OF-TK2	NA	671'	NA
4	WT	32 SEC.	32 SEC.	99 SEC.
5	MD-RST	(0)	(0)	(0)
6	CW/MD	"C"	"C"	"C"
7	CJ-LOS	DL (0)	DL (0)	DL (0)
8	PJ-DET	DL (15 SEC.)	DL (15 SEC.)	DL (15 SEC.)
9	PJ-RX	DL (15)	DL (15)	DL (15)
10	POS-ST	"dn"	"dn"	"dn"

SWITCH INFORMATION

SWITCH	TRACK 1	TRACK 2
MASTER/SLAVE	SLAVE	SLAVE
RSI FAULT JUMPER	NA	NA
RSI-LOS JUMPER	NA	NA
TLM W1 JUMPER	PINS 1-2	
TLM W2 JUMPER	PINS 2-3	
TLM W3 JUMPER	PINS 2-3	
MINUTE TIMEOUT	5 MIN	
CW/MD	CW	
STANDBY/AUTO/NORMAL	AUTO	

NOTES: DL= DEFAULT LEVEL
NA= NON APPLICABLE

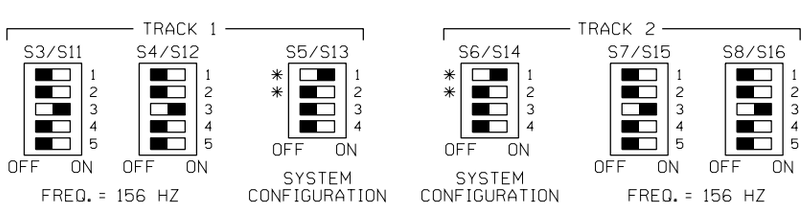

NOTES: FOR S5/S13 AND S6/S14

*1.) ACTUATOR 1 SELECTS NORMAL APPROACH WHEN SET TO ON POSITION.

*2.) WITH ACTUATOR 1 IN OFF POSITION ACTUATOR 2 SELECTS SHORT APPROACH WHEN OFF AND SELECTS VERY SHORT WHEN ON.

3.) ACTUATOR 3 OFF SELECTS HXP OPERATION.

4.) ACTUATOR 4 OFF = NORMAL MUX TABLE
ACTUATOR 4 ON = ALTERNATE MUX TABLE

ALL NEW

DESIGNED 06-15-11
GALESBURG 2011
TCS/JML SEQ.# 47149

BURLINGTON NORTHERN SANTA FE RAILWAY

CHXP-3R2 PROGRAM INFORMATION
COUNTY HWY 9 GALESBURG, IL

LS 0001 MP 159.29 SH 07 OF 23

PRELIMINARY

PLAN MUST NOT BE MODIFIED WITHOUT APPROVAL OF SIGNAL ENGINEERING COPYRIGHT 2012 BNSF RAILWAY COMPANY. ALL RIGHTS RESERVED.

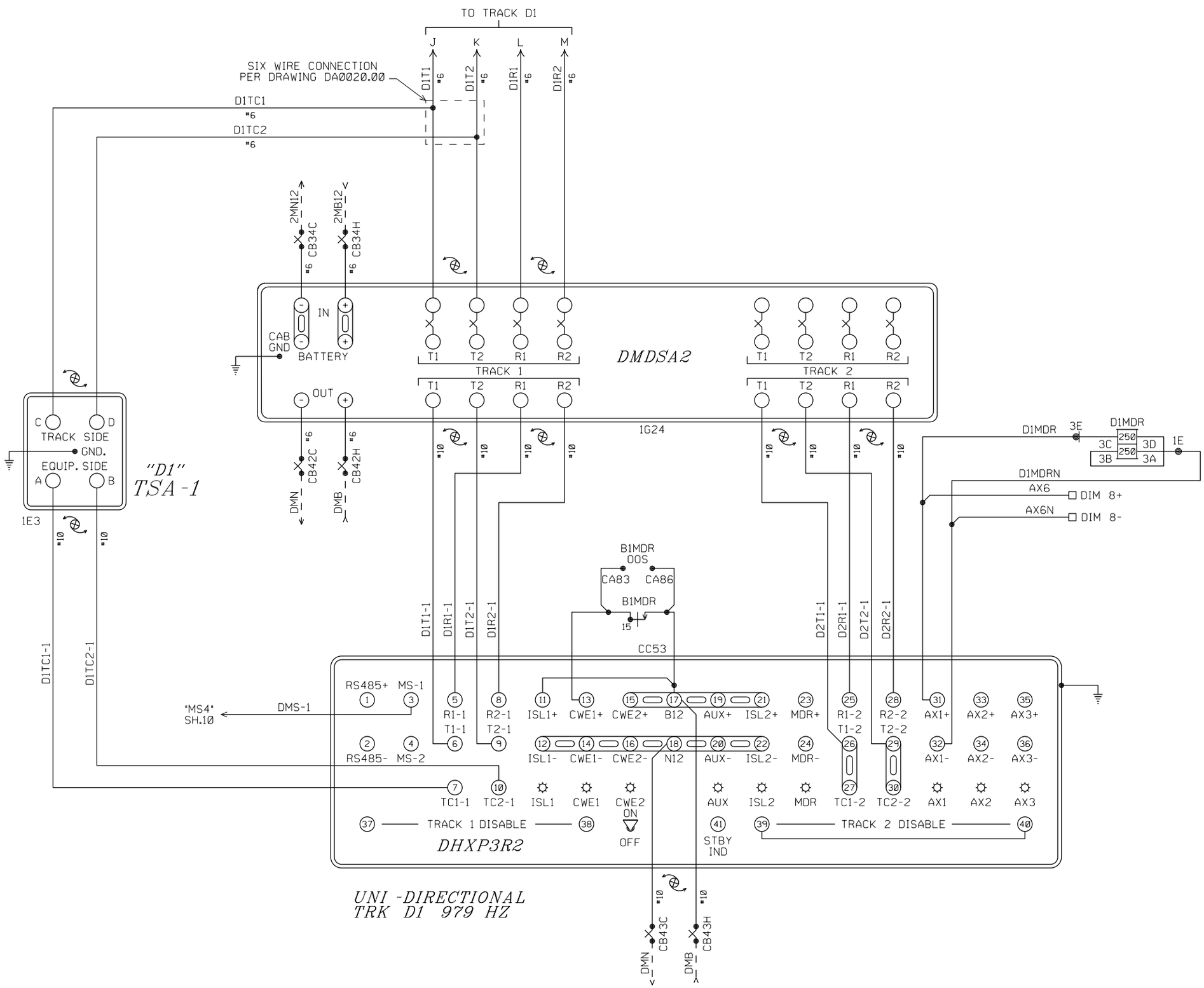

ALL NEW

BURLINGTON NORTHERN SANTA FE RAILWAY		
DHXP-3R2 TRACK CIRCUITS COUNTY HWY 9 GALESBURG, IL		
LS 0001	MP 159.29	SH 08 OF 23

DESIGNED 06-15-11
GALESBURG 2011
TCS/JML SEQ.# 47149

PRELIMINARY

PLAN MUST NOT BE MODIFIED WITHOUT APPROVAL OF SIGNAL ENGINEERING COPYRIGHT 2012 BNSF RAILWAY COMPANY. ALL RIGHTS RESERVED.

PROGRAM INFORMATION

PROGRAM VERSION 42.0 OR LATER

*=FIELD ADJUSTMENT TO BE MADE ACCORDING TO THE HXP-3 INSTRUCTION MANUAL 100052-001 AD0 & SUPPLEMENTS.

HXP-3R2 ADJUST SELECT ADJUSTMENTS

NO.	ADJUSTMENT NAME	TRACK 1	TRACK 2
1	APPROACH LENGTH	273'	XXXX'
2	WARNING TIME	99 SEC.	XX SEC.
3	LIA	*	*
4	TC	*	*
5	MD RESTART	*	*

NOTE:

BEFORE PROGRAMMING ANY PARAMETERS/OPTIONS FOR THE HXP GO TO 'OPTION 49' AND RESET ALL LOCAL PARAMETERS TO FACTORY DEFAULT VALUES. SEE HXP-3 MANUAL 100052-001 AD0 PAGE 4-14.

OPTION ADJUSTMENTS

NO.	ABBREVIATION	TRACK 1	TRACK 2
1	TK-ENA	"UP"	"UP"
2	TK FO	979 HZ	XXX HZ
3	CW/MD	"C"	"C"
4	UNI-BI	"U" (UNI)	"b" (BI)
5	NBS-C	* RX	* RX
		* FEET	* FEET
6	CWEWT	DL (80 SEC.)	DL (80 SEC.)
7	LOS	DL (16 SEC.)	DL (16 SEC.)
8	IJ-LOS	DL (5 SEC.)	DL (5 SEC.)
9	BC	*	*
10	P-COMP	*	*
11	AX1	SEE AX ADJ.	SEE AX ADJ.
12	AX2	SEE AX ADJ.	SEE AX ADJ.
13	AX3	SEE AX ADJ.	SEE AX ADJ.
17	MDR-AX/OF-TK	0'	0'
	CJ-LOS	DL (0)	DL (0)
	PJ-DET	DL (15 SEC.)	DL (15 SEC.)
	PJ-RX	DL (15)	DL (15)
18	MD-TMR	DL (10 MIN.)	DL (10 MIN.)
19	MIN-WT	DL (0)	DL (0)
20	FS-RX	DL (0)	DL (0)
	FS-TM	DL (10 MIN.)	DL (10 MIN.)
21	POS-RX	DL (0)	DL (0)
	POS-TM	DL (0)	DL (0)
22	AR-RX	DL (0)	DL (0)
	AR-TM	DL (10 MIN.)	DL (10 MIN.)
47	ATO-RX	UP	UP
48	PF-ENA	"dn"	"dn"

AX ADJUSTMENTS

NO.	ABBREVIATION	AX 1	AX 2	AX 3
1	TK-ASN	1	2	1,2
2	OF-TK1	152'	NA	NA
3	OF-TK2	NA	NA	NA
4	WT	32 SEC.	99 SEC.	99 SEC.
5	MD-RST	(1)	(0)	(0)
6	CW/MD	"C"	"C"	"C"
7	CJ-LOS	DL (0)	DL (0)	DL (0)
8	PJ-DET	DL (15 SEC.)	DL (15 SEC.)	DL (15 SEC.)
9	PJ-RX	DL (15)	DL (15)	DL (15)
10	POS-ST	"dn"	"dn"	"dn"

SWITCH INFORMATION

SWITCH	TRACK 1	TRACK 2
MASTER/SLAVE	MASTER	MASTER
RSI FAULT JUMPER	NA	NA
RSI-LOS JUMPER	NA	NA
TLM W1 JUMPER	PINS 1-2	
TLM W2 JUMPER	PINS 2-3	
TLM W3 JUMPER	PINS 2-3	
MINUTE TIMEOUT	5 MIN	
CW/MD	CW	
STANDBY/AUTO/NORMAL	AUTO	

NOTES: DL= DEFAULT LEVEL
NA= NON APPLICABLE

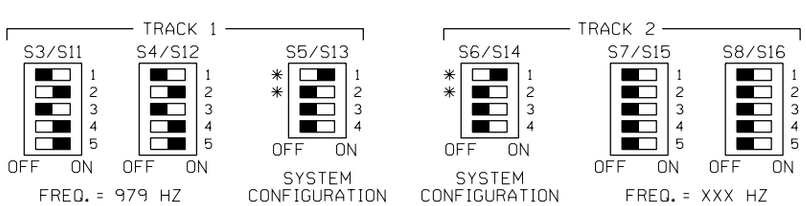

NOTES: FOR S5/S13 AND S6/S14

*1.) ACTUATOR 1 SELECTS NORMAL APPROACH WHEN SET TO ON POSITION.

*2.) WITH ACTUATOR 1 IN OFF POSITION ACTUATOR 2 SELECTS SHORT APPROACH WHEN OFF AND SELECTS VERY SHORT WHEN ON.

3.) ACTUATOR 3 OFF SELECTS HXP OPERATION.

4.) ACTUATOR 4 OFF = NORMAL MUX TABLE
ACTUATOR 4 ON = ALTERNATE MUX TABLE

ALL NEW

DESIGNED 06-15-11
GALESBURG 2011
TCS/JML SEQ.# 47149

BURLINGTON NORTHERN SANTA FE RAILWAY

DHXP-3R2 PROGRAM INFORMATION
COUNTY HWY 9 GALESBURG, IL

LS 0001 MP 159.29 SH 09 OF 23

PRELIMINARY

PLAN MUST NOT BE MODIFIED WITHOUT APPROVAL OF SIGNAL ENGINEERING COPYRIGHT 2012 BNSF RAILWAY COMPANY. ALL RIGHTS RESERVED.

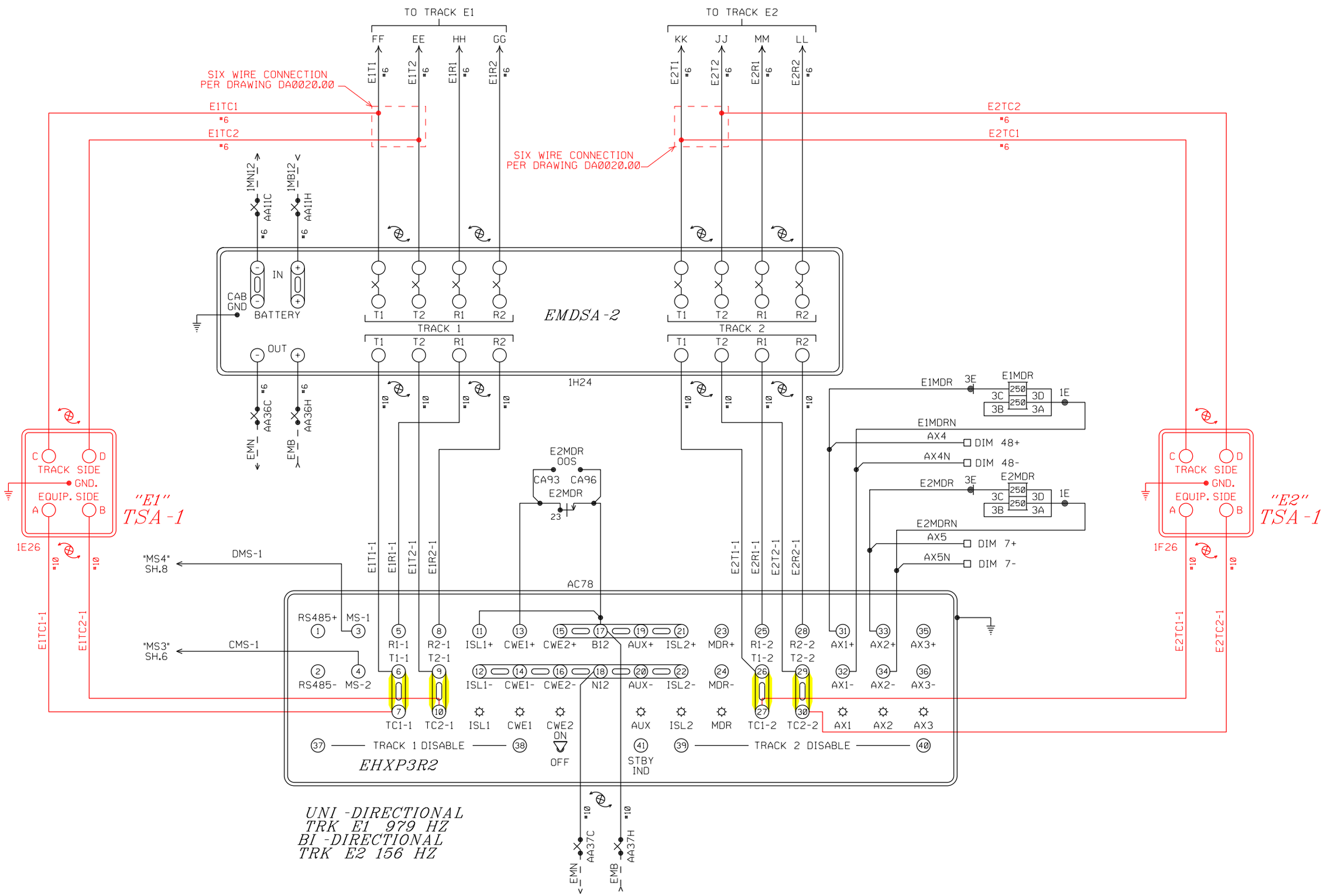

ALL NEW

REVISED 03-30-12

DESIGNED 06-15-11
GALESBURG 2011
TCS/JML SEQ.# 47149

BURLINGTON NORTHERN SANTA FE RAILWAY

EHXP-3R2 TRACK CIRCUITS
COUNTY HWY 9 GALESBURG, IL

LS 0001 | MP 159.29 | SH 10 OF 23

RED = IN YELLOW = OUT

PRELIMINARY

PLAN MUST NOT BE MODIFIED WITHOUT APPROVAL OF SIGNAL ENGINEERING COPYRIGHT 2012 BNSF RAILWAY COMPANY. ALL RIGHTS RESERVED.

PROGRAM INFORMATION

PROGRAM VERSION 42.0 OR LATER

*=FIELD ADJUSTMENT TO BE MADE ACCORDING TO THE HXP-3 INSTRUCTION MANUAL 100052-001 AD0 & SUPPLEMENTS.

HXP-3R2 ADJUST SELECT ADJUSTMENTS

NO.	ADJUSTMENT NAME	TRACK 1	TRACK 2
1	APPROACH LENGTH	250'	2420'
2	WARNING TIME	99 SEC.	99 SEC.
3	LIA	*	*
4	TC	*	*
5	MD RESTART	*	*

NOTE:

BEFORE PROGRAMMING ANY PARAMETERS/OPTIONS FOR THE HXP GO TO 'OPTION 49' AND RESET ALL LOCAL PARAMETERS TO FACTORY DEFAULT VALUES. SEE HXP-3 MANUAL 100052-001 AD0 PAGE 4-14.

OPTION ADJUSTMENTS

NO.	ABBREVIATION	TRACK 1	TRACK 2
1	TK-ENA	"UP"	"UP"
2	TK FO	979 HZ	156 HZ
3	CW/MD	"C"	"C"
4	UNI-BI	"U" (UNI)	"b" (BI)
5	NBS-C	* RX	* RX
		* FEET	* FEET
6	CWEWT	DL (80 SEC.)	DL (80 SEC.)
7	LOS	DL (16 SEC.)	DL (16 SEC.)
8	IJ-LOS	DL (5 SEC.)	DL (5 SEC.)
9	BC	*	*
10	P-COMP	*	*
11	AX1	SEE AX ADJ.	SEE AX ADJ.
12	AX2	SEE AX ADJ.	SEE AX ADJ.
13	AX3	SEE AX ADJ.	SEE AX ADJ.
17	MDR-AX/OF-TK	0'	0'
	CJ-LOS	DL (0)	DL (0)
	PJ-DET	DL (15 SEC.)	DL (15 SEC.)
	PJ-RX	DL (15)	DL (15)
18	MD-TMR	DL (10 MIN.)	DL (10 MIN.)
19	MIN-WT	DL (0)	DL (0)
20	FS-RX	DL (0)	DL (0)
	FS-TM	DL (10 MIN.)	DL (10 MIN.)
21	POS-RX	DL (0)	DL (0)
	POS-TM	DL (0)	DL (0)
22	AR-RX	DL (0)	DL (0)
	AR-TM	DL (10 MIN.)	DL (10 MIN.)
47	ATO-RX	UP	UP
48	PF-ENA	"dn"	"dn"

AX ADJUSTMENTS

NO.	ABBREVIATION	AX 1	AX 2	AX 3
1	TK-ASN	1	2	1,2
2	OF-TK1	284'	NA	NA
3	OF-TK2	NA	504'	NA
4	WT	32 SEC.	32 SEC.	99 SEC.
5	MD-RST	(1)	(0)	(0)
6	CW/MD	"C"	"C"	"C"
7	CJ-LOS	DL (0)	DL (0)	DL (0)
8	PJ-DET	DL (15 SEC.)	DL (15 SEC.)	DL (15 SEC.)
9	PJ-RX	DL (15)	DL (15)	DL (15)
10	POS-ST	"dn"	"dn"	"dn"

SWITCH INFORMATION

SWITCH	TRACK 1	TRACK 2
MASTER/SLAVE	SLAVE	SLAVE
RSI FAULT JUMPER	NA	NA
RSI-LOS JUMPER	NA	NA
TLM W1 JUMPER	PINS 1-2	
TLM W2 JUMPER	PINS 2-3	
TLM W3 JUMPER	PINS 2-3	
MINUTE TIMEOUT	5 MIN	
CW/MD	CW	
STANDBY/AUTO/NORMAL	AUTO	

NOTES: DL= DEFAULT LEVEL
NA= NON APPLICABLE

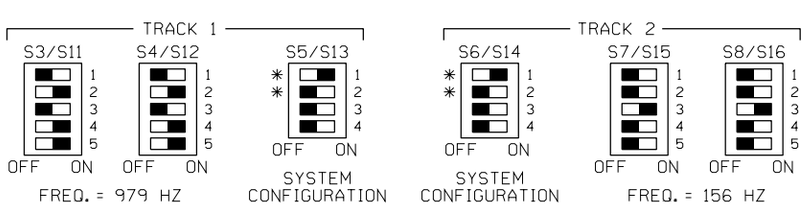

NOTES: FOR S5/S13 AND S6/S14

*1.) ACTUATOR 1 SELECTS NORMAL APPROACH WHEN SET TO ON POSITION.

*2.) WITH ACTUATOR 1 IN OFF POSITION ACTUATOR 2 SELECTS SHORT APPROACH WHEN OFF AND SELECTS VERY SHORT WHEN ON.

3.) ACTUATOR 3 OFF SELECTS HXP OPERATION.

4.) ACTUATOR 4 OFF = NORMAL MUX TABLE
ACTUATOR 4 ON = ALTERNATE MUX TABLE

ALL NEW

BURLINGTON NORTHERN SANTA FE RAILWAY

EHXP-3R2 PROGRAM INFORMATION
COUNTY HWY 9 GALESBURG, IL

DESIGNED 06-15-11
GALESBURG 2011
TCS/JML SEQ.# 47149

LS 0001 MP 159.29 SH 11 OF 23

PRELIMINARY

PLAN MUST NOT BE MODIFIED WITHOUT APPROVAL OF SIGNAL ENGINEERING

COPYRIGHT 2012 BNSF RAILWAY COMPANY. ALL RIGHTS RESERVED.

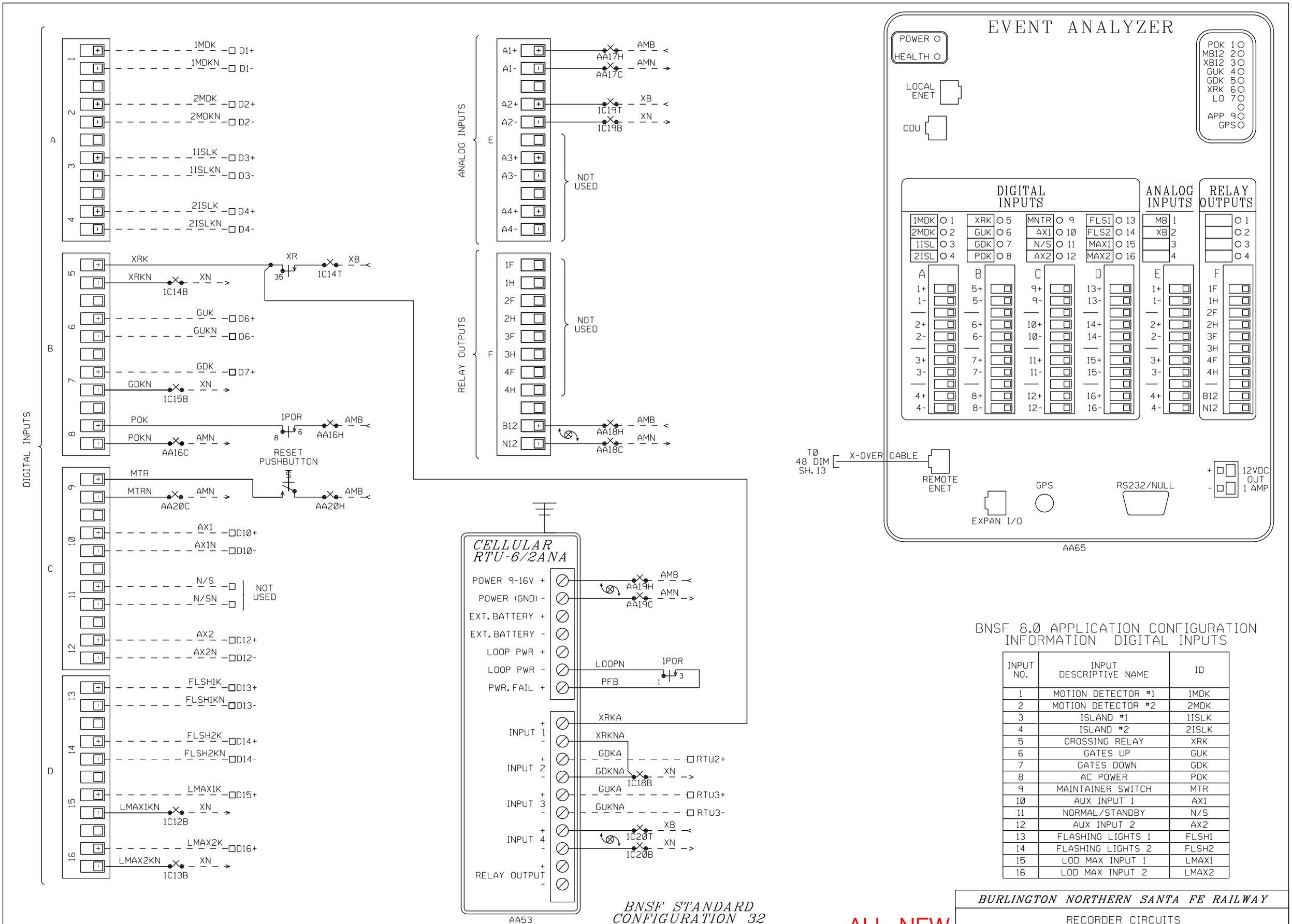

BNSF 8.0 APPLICATION CONFIGURATION INFORMATION DIGITAL INPUTS

INPUT NO.	INPUT DESCRIPTIVE NAME	ID
1	MOTION DETECTOR #1	1MDK
2	MOTION DETECTOR #2	2MDK
3	ISLAND #1	1ISLK
4	ISLAND #2	2ISLK
5	CROSSING RELAY	XRK
6	GATES UP	GUK
7	GATES DOWN	GDK
8	AC POWER	POK
9	MAINTAINER SWITCH	MTR
10	AUX INPUT 1	AX1
11	NORMAL/STANDBY	N/S
12	AUX INPUT 2	AX2
13	FLASHING LIGHTS 1	FLSH1
14	FLASHING LIGHTS 2	FLSH2
15	LOD MAX INPUT 1	LMAX1
16	LOD MAX INPUT 2	LMAX2

ALL NEW

DESIGNED 06-15-11
GALESBURG 2011
TCS/JML SEQ.# 47149

BURLINGTON NORTHERN SANTA FE RAILWAY

RECORDER CIRCUITS
COUNTY HWY 9 GALESBURG, IL

LS 0001 | MP 159.29 | SH 12 OF 23

PRELIMINARY

PLAN MUST NOT BE MODIFIED WITHOUT APPROVAL OF SIGNAL ENGINEERING COPYRIGHT 2012 BNSF RAILWAY COMPANY. ALL RIGHTS RESERVED.

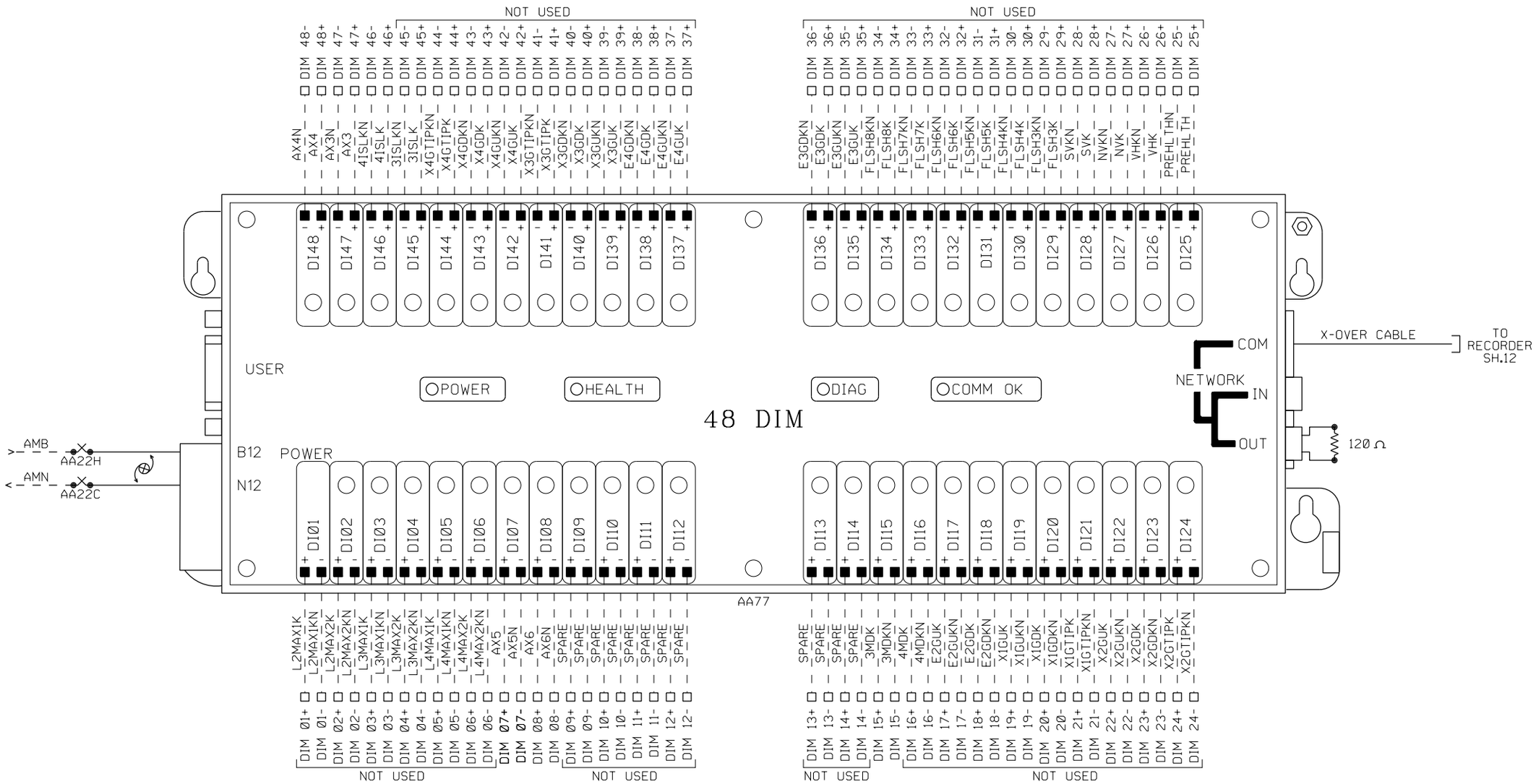

*= USER DEFINEABLE SPARE INPUT
ALL OTHERS DEFINED BY PROGRAM, DO NOT CHANGE

INPUT NO.	INPUT DESCRIPTIVE NAME	ID
1	LOD2 Max Input 1	L2MAX1K
2	LOD2 Max Input 2	L2MAX2K
3	LOD3 Max Input 1	L3MAX1K
4	LOD3 Max Input 2	L3MAX2K
5	LOD4 Max Input 1	L4MAX1K
6	LOD4 Max Input 2	L4MAX2K
7	Auxiliary Drive #5	AX5
8	Auxiliary Drive #6	AX6
9	* SPARE	SPARE
10	* SPARE	SPARE
11	* SPARE	SPARE
12	* SPARE	SPARE
13	* SPARE	SPARE
14	* SPARE	SPARE
15	Motion Detect #3	3MDK
16	Motion Detect #4	4MDK

INPUT NO.	INPUT DESCRIPTIVE NAME	ID
17	Entrance 2 Gate Up	E2GUK
18	Entrance 2 Gate Down	E2GDK
19	Exit 1 Gate Up	X1GUK
20	Exit 1 Gate Down	X1GDK
21	Exit 1 Gate Tip	X1GTIPK
22	Exit 2 Gate Up	X2GUK
23	Exit 2 Gate Down	X2GDK
24	Exit 2 Gate Tip	X2GTIPK
25	Preempt	PREHLTH
26	Vehicle Health	VHK
27	Northbound Vehicle	NVK
28	Southbound Vehicle	SVK
29	Flashing Light Input 3	FLSH3K
30	Flashing Light Input 4	FLSH4K
31	Flashing Light Input 5	FLSH5K
32	Flashing Light Input 6	FLSH6K

INPUT NO.	INPUT DESCRIPTIVE NAME	ID
33	Flashing Light Input 7	FLSH7K
34	Flashing Light Input 8	FLSH8K
35	Entrance 3 Gate Up	E3GUK
36	Entrance 3 Gate Down	E3GDK
37	Entrance 4 Gate Up	E4GUK
38	Entrance 4 Gate Down	E4GDK
39	Exit 3 Gate Up	X3GUK
40	Exit 3 Gate Down	X3GDK
41	Exit 3 Gate Tip	X3GTIPK
42	Exit 4 Gate Up	X4GUK
43	Exit 4 Gate Down	X4GDK
44	Exit 4 Gate Tip	X4GTIPK
45	Island #3	3ISLK
46	Island #4	4ISLK
47	Auxiliary Drive #3	AX3
48	Auxiliary Drive #4	AX4

ALL NEW

DESIGNED 06-15-11
GALESBURG 2011
TCS/JML SEQ.# 47149

BURLINGTON NORTHERN SANTA FE RAILWAY

48 DIM RECORDER EXPANSION MODULE
COUNTY HWY 9 GALESBURG, IL

LS 0001 MP 159.29 SH 13 OF 23

PRELIMINARY

0001159_29x13c_.dgn March 30, 2012

PLAN MUST NOT BE MODIFIED WITHOUT APPROVAL OF SIGNAL ENGINEERING COPYRIGHT 2012 BNSF RAILWAY COMPANY. ALL RIGHTS RESERVED.

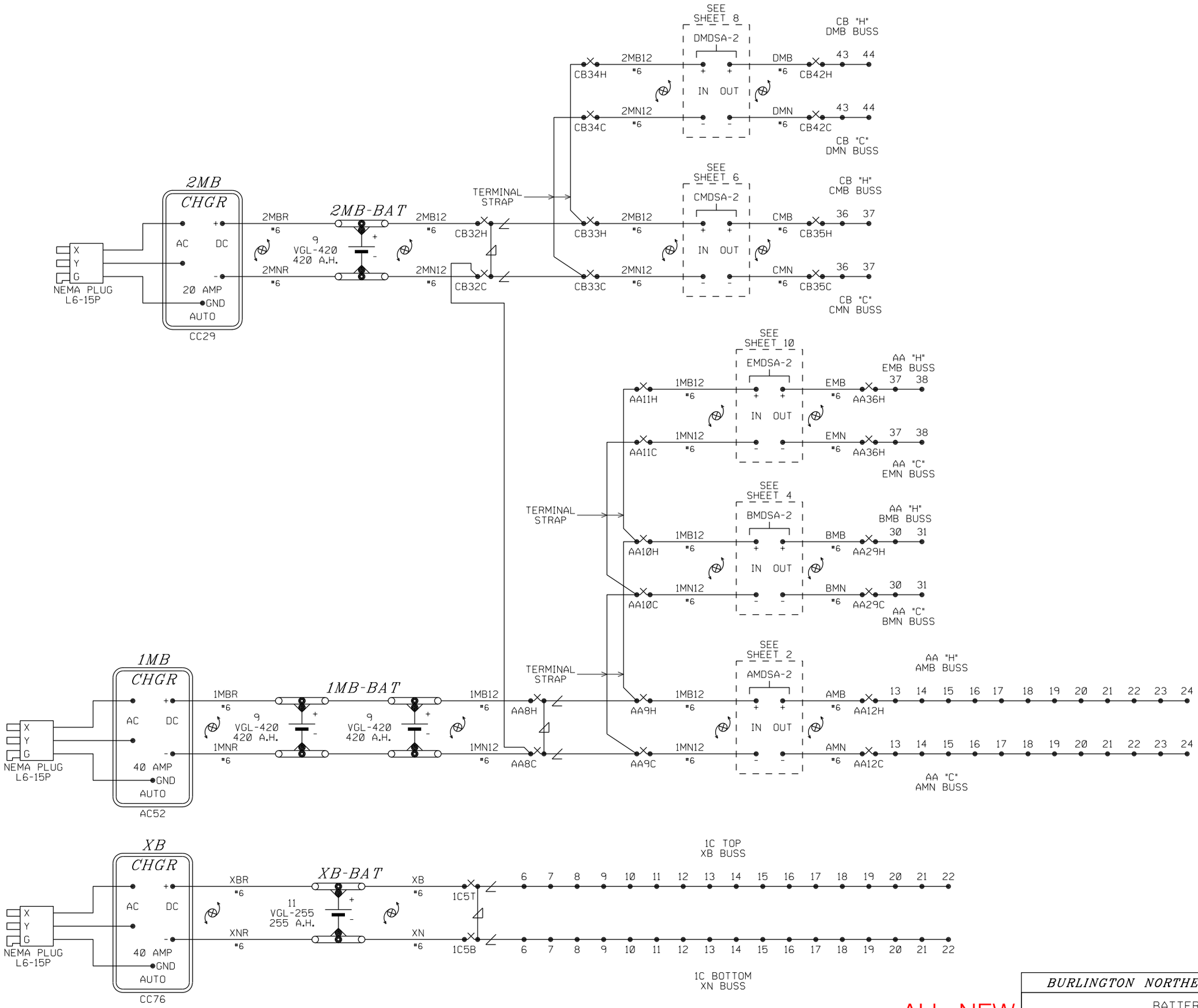

ALL NEW

BURLINGTON NORTHERN SANTA FE RAILWAY		
BATTERY CIRCUITS COUNTY HWY 9 GALESBURG, IL		
LS 0001	MP 159.29	SH 14 OF 23

DESIGNED 06-15-11
GALESBURG 2011
TCS/JML SEQ.# 47149

PRELIMINARY

PLAN MUST NOT BE MODIFIED WITHOUT APPROVAL OF SIGNAL ENGINEERING COPYRIGHT 2012 BNSF RAILWAY COMPANY. ALL RIGHTS RESERVED.

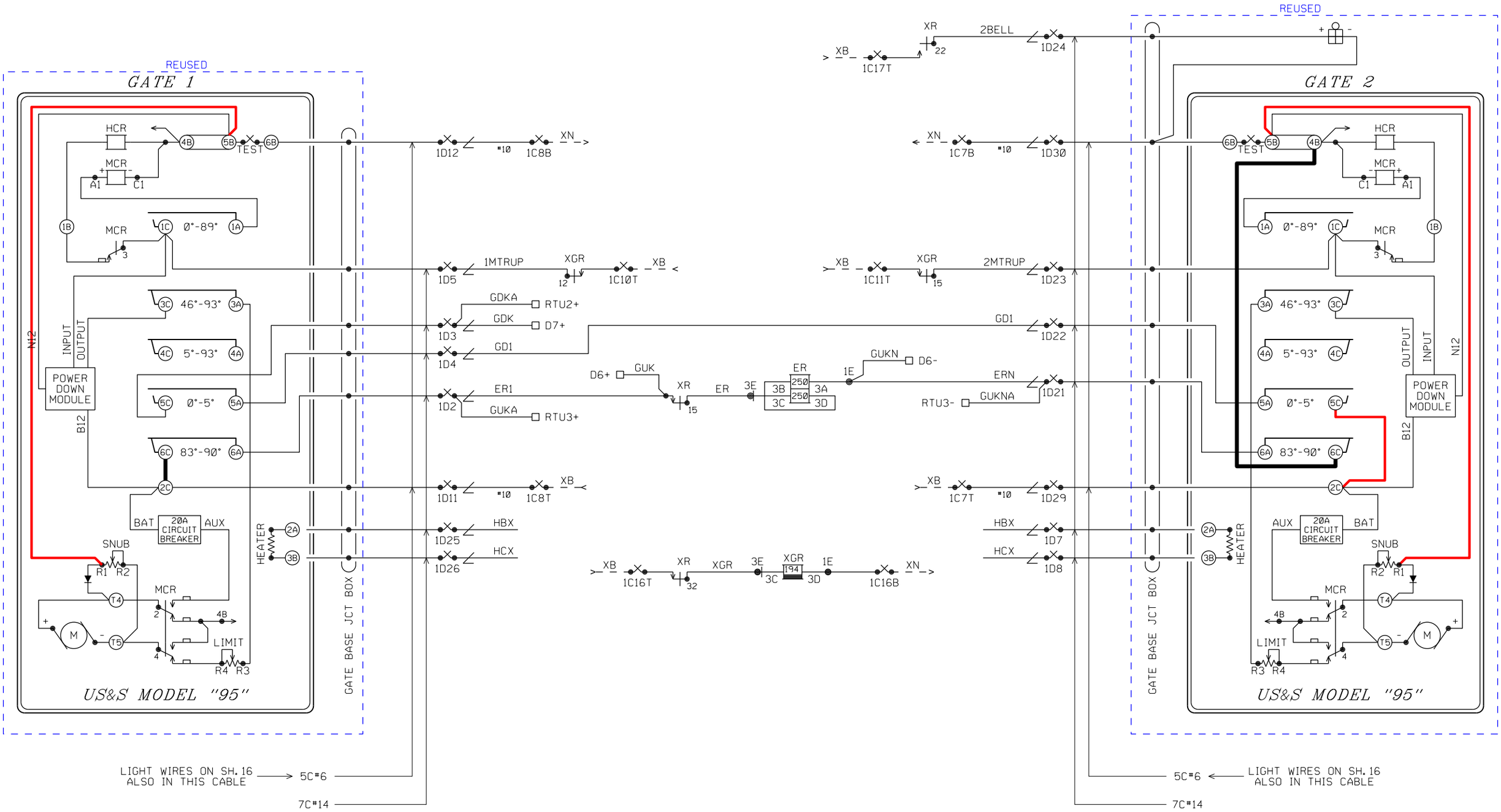

NOTE:
ADD JUMPERS IN GATE SHOWN IN BOLD.

ALL NEW

DESIGNED 06-15-11
GALESBURG 2011
TCS/JML SEQ.# 47149

BURLINGTON NORTHERN SANTA FE RAILWAY

GATE CIRCUIT PLAN
COUNTY HWY 9 GALESBURG, IL

LS 0001	MP 159.29	SH 15 OF 23

PRELIMINARY

0001159_29x15c_.dgn March 30, 2012

BLUE = REUSED RED = IN YELLOW = OUT

PLAN MUST NOT BE MODIFIED WITHOUT APPROVAL OF SIGNAL ENGINEERING COPYRIGHT 2012 BNSF RAILWAY COMPANY. ALL RIGHTS RESERVED.

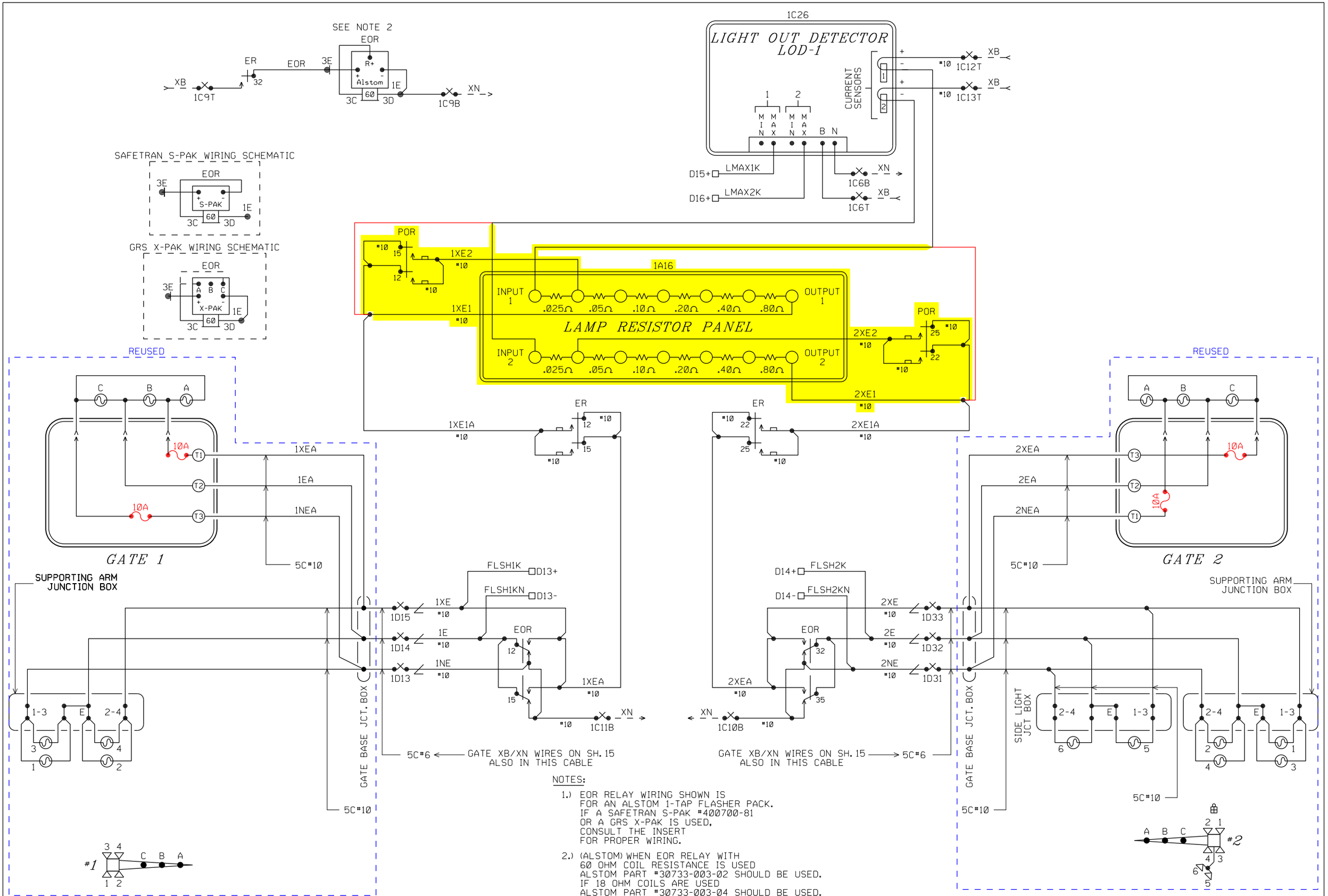

NOTES:

1.) EOR RELAY WIRING SHOWN IS FOR AN ALSTOM 1-TAP FLASHER PACK. IF A SAFETRAN S-PAK #400700-81 OR A GRS X-PAK IS USED, CONSULT THE INSERT FOR PROPER WIRING.

2.) (ALSTOM) WHEN EOR RELAY WITH 60 OHM COIL RESISTANCE IS USED ALSTOM PART #30733-003-02 SHOULD BE USED. IF 18 OHM COILS ARE USED ALSTOM PART #30733-003-04 SHOULD BE USED.

3.) (X-PAK) WHEN EOR RELAY WITH 60 OHM COIL RESISTANCE IS USED CONNECT JUMPER FROM 3C TO "A". IF 18 OHM COILS ARE USED CONNECT JUMPER FROM 3C TO "C".

4.) (S-PAK) DO NOT USE S-PAK WITH 18 OHM COILS

ALL NEW

REVISED 12-11-12

DESIGNED 06-15-11
GALESBURG 2011
TCS/JML SEQ.# 47149

BURLINGTON NORTHERN SANTA FE RAILWAY

FLASHER CIRCUIT PLAN
COUNTY HWY 9 GALESBURG, IL

LS 0001 | MP 159.29 | SH 16 OF 23

0001159_29x16c_.dgn December 11, 2012

BLUE = REUSED RED = IN YELLOW = OUT

PRELIMINARY

PLAN MUST NOT BE MODIFIED WITHOUT APPROVAL OF SIGNAL ENGINEERING

COPYRIGHT 2012 BNSF RAILWAY COMPANY. ALL RIGHTS RESERVED.

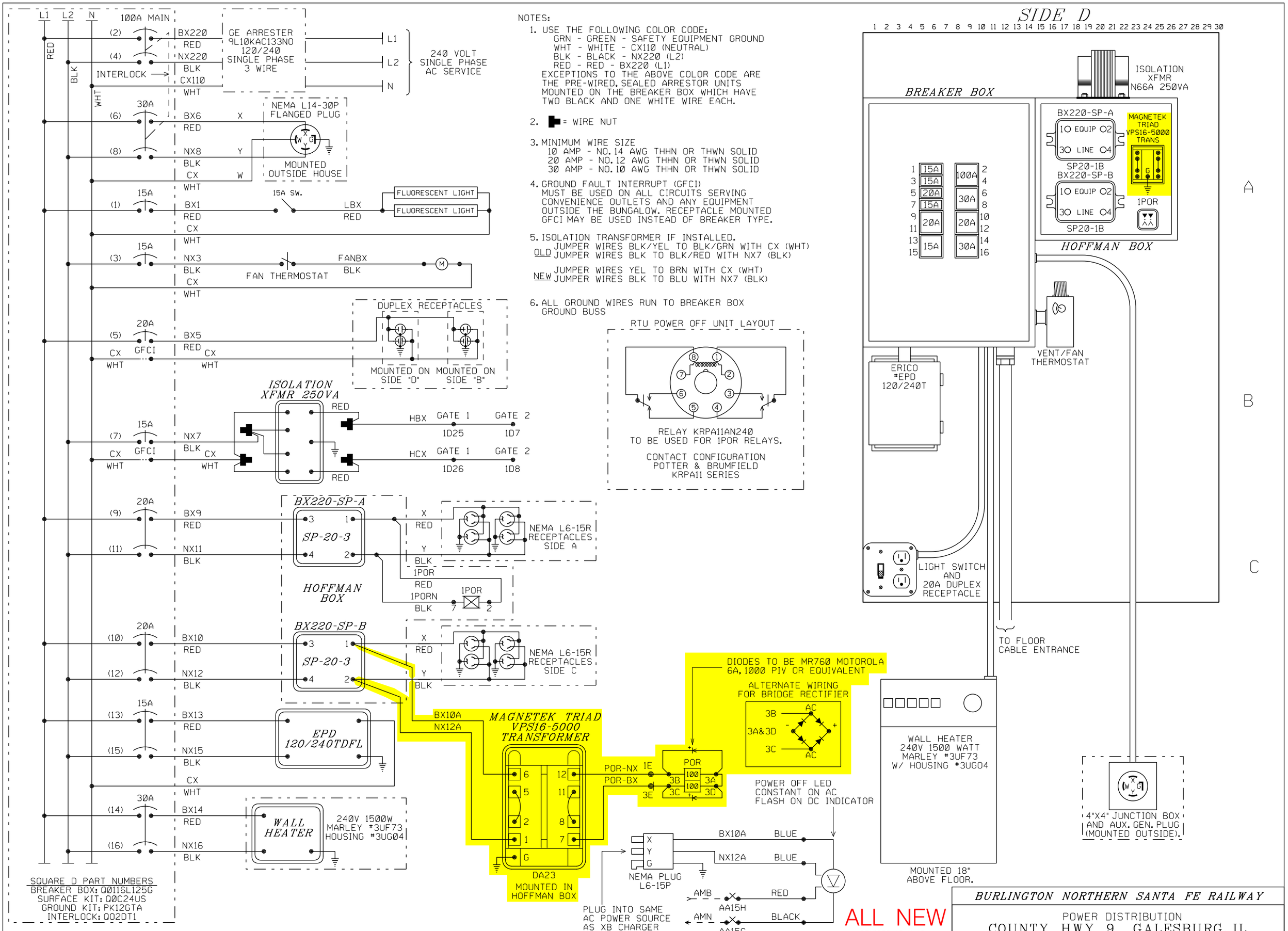

PLAN MUST NOT BE MODIFIED WITHOUT APPROVAL OF SIGNAL ENGINEERING COPYRIGHT 2012 BNSF RAILWAY COMPANY. ALL RIGHTS RESERVED.

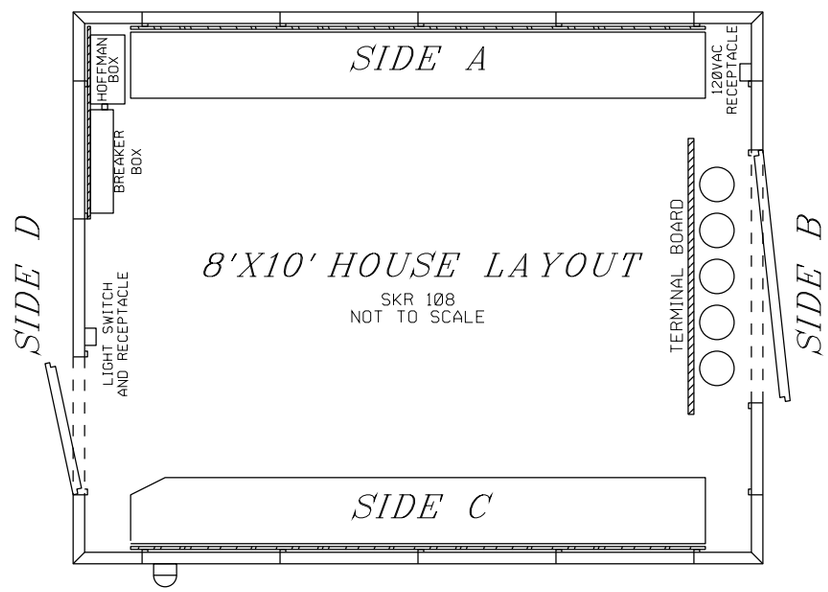

NOTE: INSTALL POWER OFF INDICATOR LIGHT ON TRACK SIDE NEAREST THE HIGHWAY AND NEAR EVE OF HOUSE.

ALL NEW

DESIGNED 06-15-11
GALESBURG 2011
TCS/JML SEQ.# 47149

BURLINGTON NORTHERN SANTA FE RAILWAY

HOUSE LAYOUT
COUNTY HWY 9 GALESBURG, IL

LS 0001 | MP 159.29 | SH 18 OF 23

PRELIMINARY

0001159_29x18c_.dgn March 30, 2012

PLAN MUST NOT BE MODIFIED WITHOUT APPROVAL OF SIGNAL ENGINEERING COPYRIGHT 2012 BNSF RAILWAY COMPANY. ALL RIGHTS RESERVED.

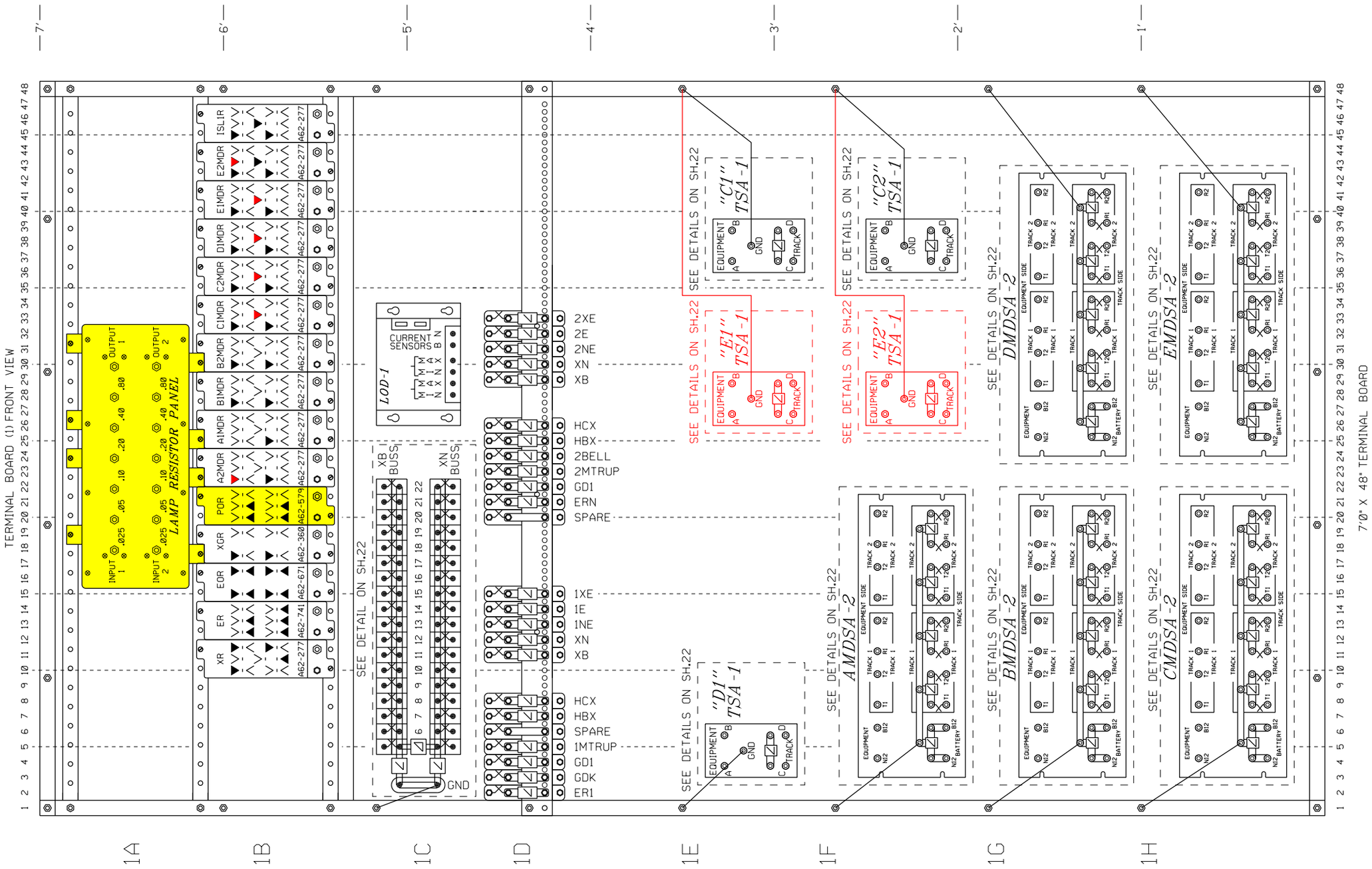

RELAY CROSS REFERENCE

GRS	SAFETRAN
A62-277	400004
A62-741	400005
A62-671	400700
A62-360	400200
A62-579	400801

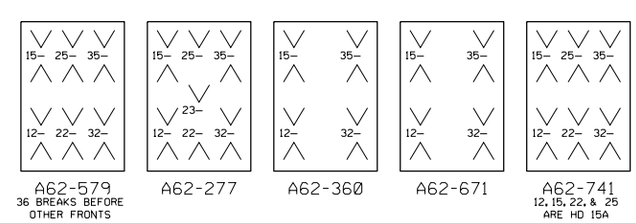

▼ = CONTACT USED

V = CONTACT NOT USED

ALL NEW

REVISED 12-11-12
REVISED 03-30-12
DESIGNED 06-15-11
GALESBURG 2011
TCS/JML SEQ.# 47149

BURLINGTON NORTHERN SANTA FE RAILWAY

TERMINAL BOARD LAYOUT (FRONT)
COUNTY HWY 9 GALESBURG, IL

LS 0001 | MP 159.29 | SH 19 OF 23

0001159_29x19c_.dgn December 11, 2012

RED = IN YELLOW = OUT PRELIMINARY

PLAN MUST NOT BE MODIFIED WITHOUT APPROVAL OF SIGNAL ENGINEERING COPYRIGHT 2012 BNSF RAILWAY COMPANY. ALL RIGHTS RESERVED.

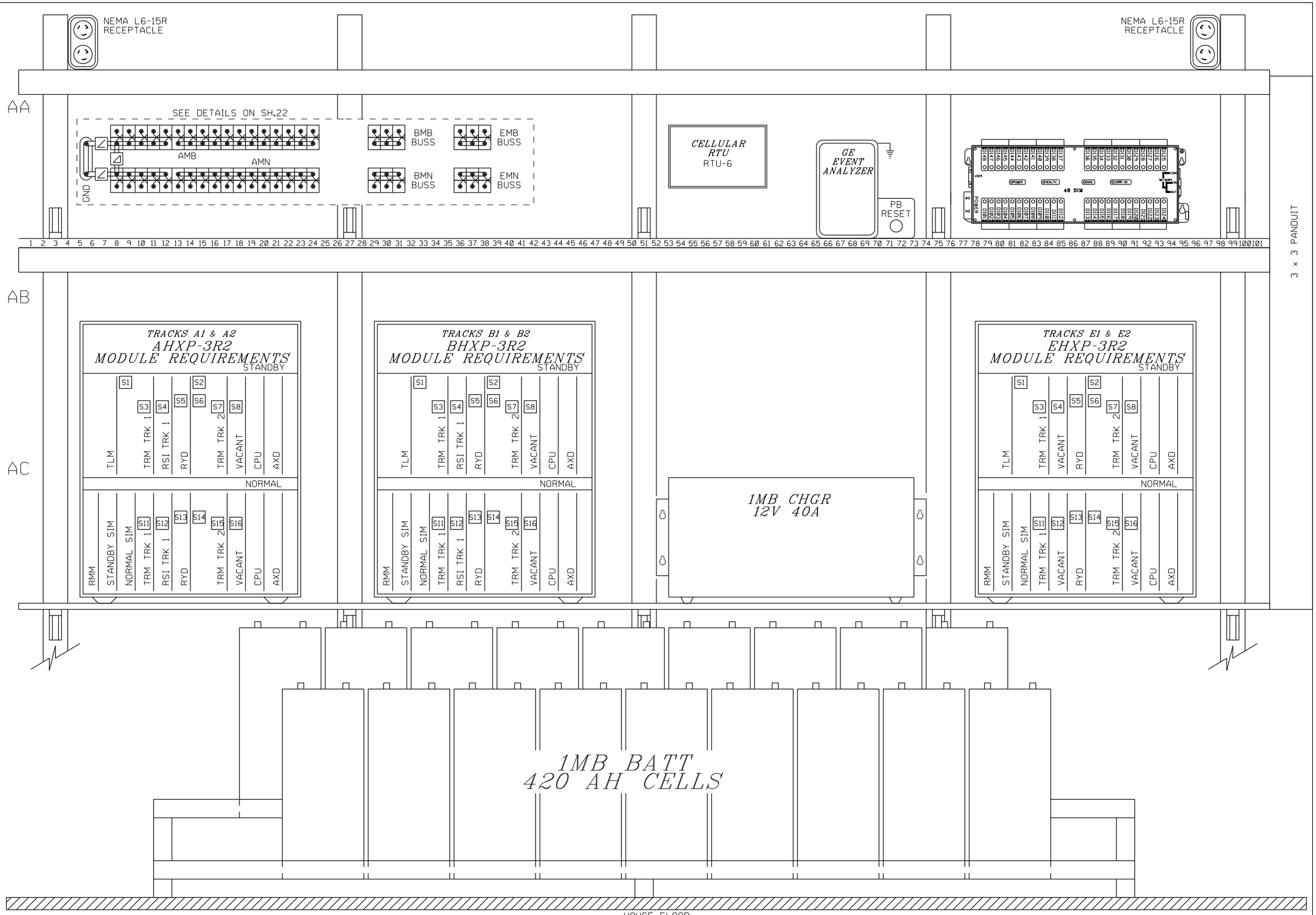

SIDE A

ALL NEW

BURLINGTON NORTHERN SANTA FE RAILWAY

SIDE "A" SHELF LAYOUT
COUNTY HWY 9 GALESBURG, IL

DESIGNED 06-15-11
GALESBURG 2011
TCS/JML SEQ.# 47149

LS 0001 | MP 159.29 | SH 20 OF 23

PRELIMINARY

PLAN MUST NOT BE MODIFIED WITHOUT APPROVAL OF SIGNAL ENGINEERING COPYRIGHT 2012 BNSF RAILWAY COMPANY. ALL RIGHTS RESERVED.

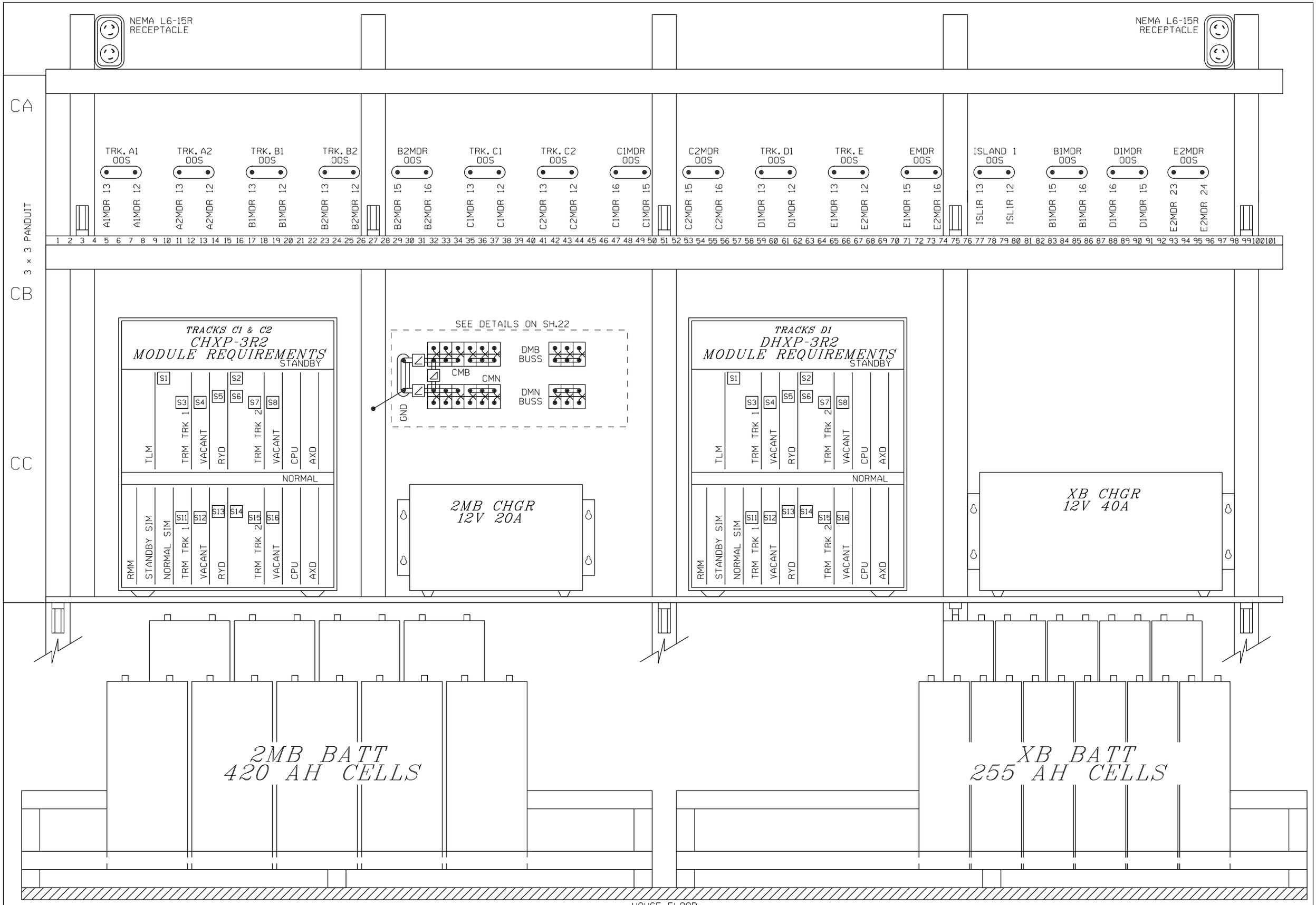

SIDE C

ALL NEW

BURLINGTON NORTHERN SANTA FE RAILWAY

SIDE "C" SHELF LAYOUT
COUNTY HWY 9 GALESBURG, IL

DESIGNED 06-15-11
GALESBURG 2011
TCS/JML SEQ.# 47149

LS 0001 | MP 159.29 | SH 21 OF 23

PRELIMINARY

PLAN MUST NOT BE MODIFIED WITHOUT APPROVAL OF SIGNAL ENGINEERING COPYRIGHT 2012 BNSF RAILWAY COMPANY. ALL RIGHTS RESERVED.

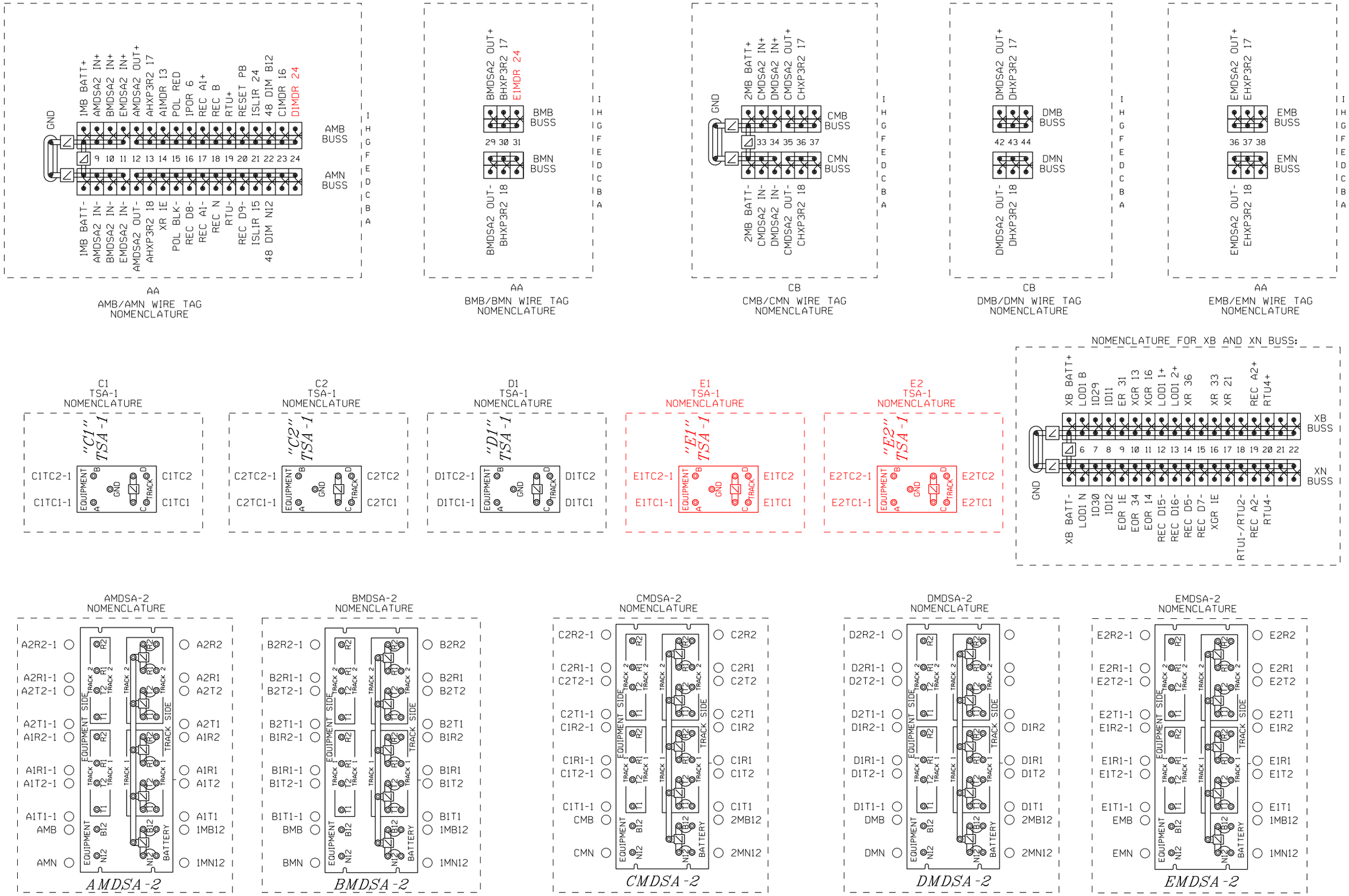

ALL NEW

REVISED 03-30-12

DESIGNED 06-15-11
GALESBURG 2011
TCS/JML SEQ.# 47149

RED = IN YELLOW = OUT

BURLINGTON NORTHERN SANTA FE RAILWAY

MDSA & BATTERY BUSS NOMENCLATURE
COUNTY HWY 9 GALESBURG, IL

LS 0001 MP 159.29 SH 22 OF 23

PRELIMINARY

0001159_29x22c_.dgn March 30, 2012

PLAN MUST NOT BE MODIFIED WITHOUT APPROVAL OF SIGNAL ENGINEERING

COPYRIGHT 2012 BNSF RAILWAY COMPANY. ALL RIGHTS RESERVED.

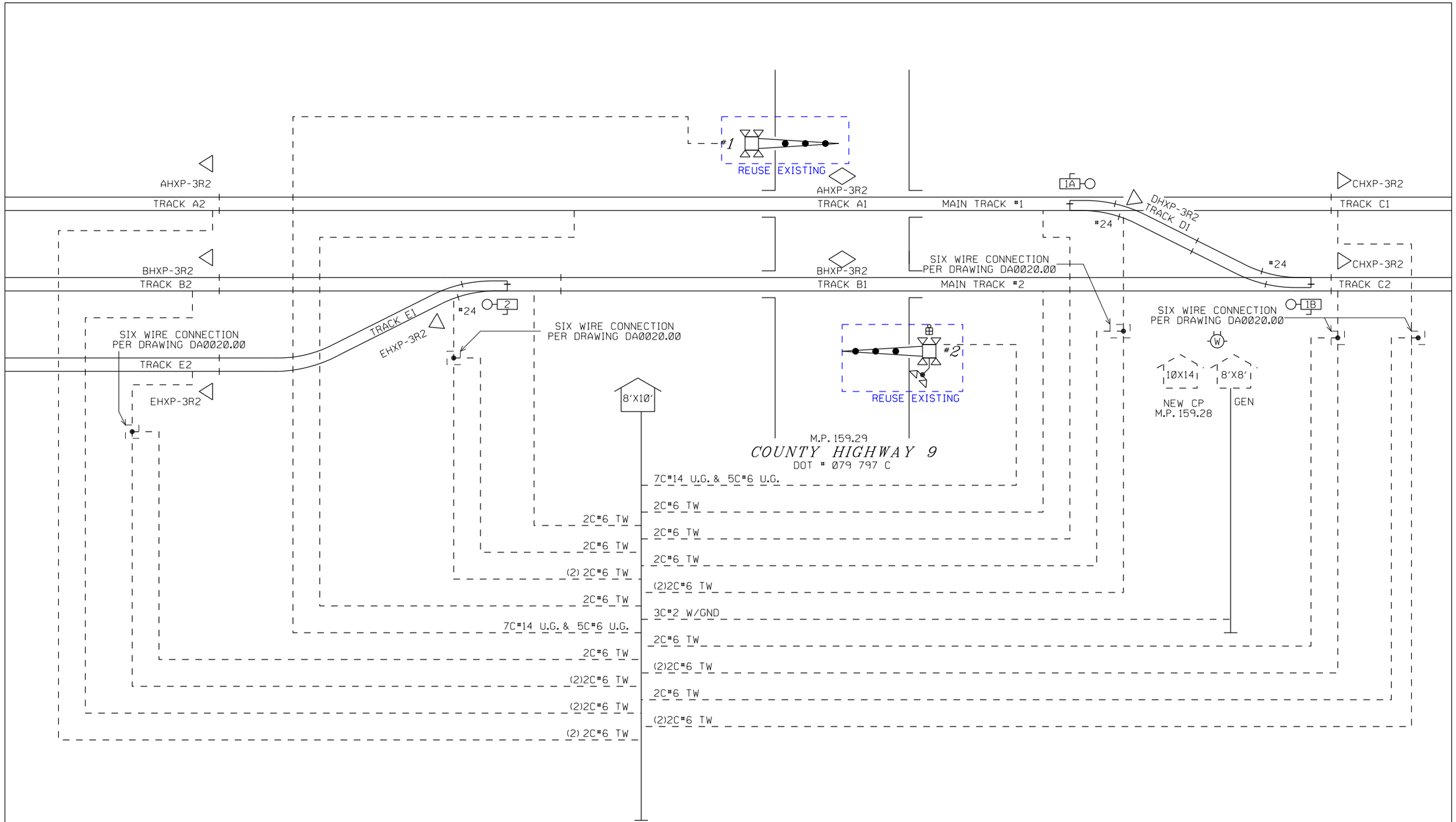

ALL NEW

REVISED 03-30-12

DESIGNED 06-15-11
GALESBURG 2011
TCS/JML SEQ.# 47149

BURLINGTON NORTHERN SANTA FE RAILWAY

CABLE LAYOUT
COUNTY HWY 9 GALESBURG, IL

LS 0001 | MP 159.29 | SH 23 OF 23

0001159_29x23c_.dgn March 30, 2012

BLUE = REUSED RED = IN YELLOW = OUT

PRELIMINARY