Minimum Program Steps Report

Location and SIN

DOT Number: 431054V
Milepost Number: 324.68
Site Name: DE SOTO, IL

SIN: 762010010016 *

* Parameter is part of office check number calculation.

MCF and Template Selection

MCF Name: GCP-T6X-02-4.mcf
MCF Revision: 24
MCFCRC: 09FC363B

Template = 1D:3 Uni pairs (OCCN) *

* Parameter is part of office check number calculation.

Minimum Program Steps

TEMPLATE: track 1-Uni, Island
Track 1 : GCP Frequency = 285 Hz (Field,TCN)
Track 1 : Approach Distance = 3081 ft (Set in Field,TCN)
Track 1 : Prime Warning Time = 25 sec (OCCN) *
Track 1 : Prime UAX = IP (OCCN) *
Track 1 : GCP Transmit Level = Medium (Set in Field,TCN)
Track 1 : Isl Frequency = 10.0 kHz (Set in Field)
Track 1 : Island Distance = 173 ft (Set in Field,TCN)

TEMPLATE: track 2-Uni,No Island
Track 2 : GCP Frequency = 285 Hz (Field,TCN)
Track 2 : Approach Distance = 3081 ft (Set in Field,TCN)
Track 2 : Prime Warning Time = 25 sec (OCCN) *
Track 2 : Prime UAX = IP (OCCN) *
Track 2 : GCP Transmit Level = Medium (Set in Field,TCN)

TEMPLATE: AND 1 XR
AND 1 Enable Used = Yes (OCCN) *

TEMPLATE: SSCC
SSCC 1 : Lamp Neutral Test = Off (Set in Field)
SSCC 2 : Lamp Neutral Test = Off (Set in Field)

TEMPLATE: OOS
OOS Control = OOS IPs (OCCN) *
T2 OOS Control = OOS Input 1 (OCCN) *

TEMPLATE: IP assignment 1
IN 1.2 = Out Of Service IP 1 (OCCN) *

TEMPLATE: IP assignment SSCC
IN 7.1 = AND 1 XR Enable (OCCN) *

ADVANCED: site options
Daylight Savings = On (Set in Field)

* Parameter is part of office check number calculation.

Check Numbers

Office Check Number: 63C39BB7
Config. Check Number: 38D16592
(Based on MCF Revision 24)

Parameters not part of office check number calculation:

Track 1 : GCP Frequency = 285 Hz
Track 1 : Approach Distance = 3081 ft (Set in Field)
Track 1 : GCP Transmit Level = Medium (Set in Field)
Track 1 : Isl Frequency = 10.0 kHz
Track 1 : Island Distance = 173 ft (Set in Field)
Track 2 : GCP Frequency = 285 Hz
Track 2 : Approach Distance = 3081 ft (Set in Field)
Track 2 : GCP Transmit Level = Medium (Set in Field)
SSCC 1 : Lamp Neutral Test = Off (Set in Field)
SSCC 2 : Lamp Neutral Test = Off (Set in Field)
Daylight Savings = On (Set in Field)

Comments

<none>

Configuration Package File

Filename: 127732468_431054V.pac
Path:
Date/Time: 5/21/2012 10:49:52
DT Version: 5.3.3

NEW SHEET

				Designed: 7/12/10 INSTALL FLASHERS W/GATES & CWT. M.P. 324.68 TR 262 Rec#: WO#: 06021 IS: /BDF / /XRL/JTB	**NOTE: Actual OFFSET and ISLAND distances must be verified by field personnel.**	UNION PACIFIC QUALITY PRODUCTIVITY SAFETY SIGNAL DESIGN	Date: 7/12/10 Des: XRL Chk: BDF AFE: 06021	**UNION PACIFIC RAILROAD** DE SOTO, ILLINOIS TR 262 MT. VERNON SUBDIVISION Office of Sr AVP Engineering - Signal/TCO Omaha, Nebraska	Sh.: 3A DOT 431054V MP: 324.68 ID: 127732468.3AX

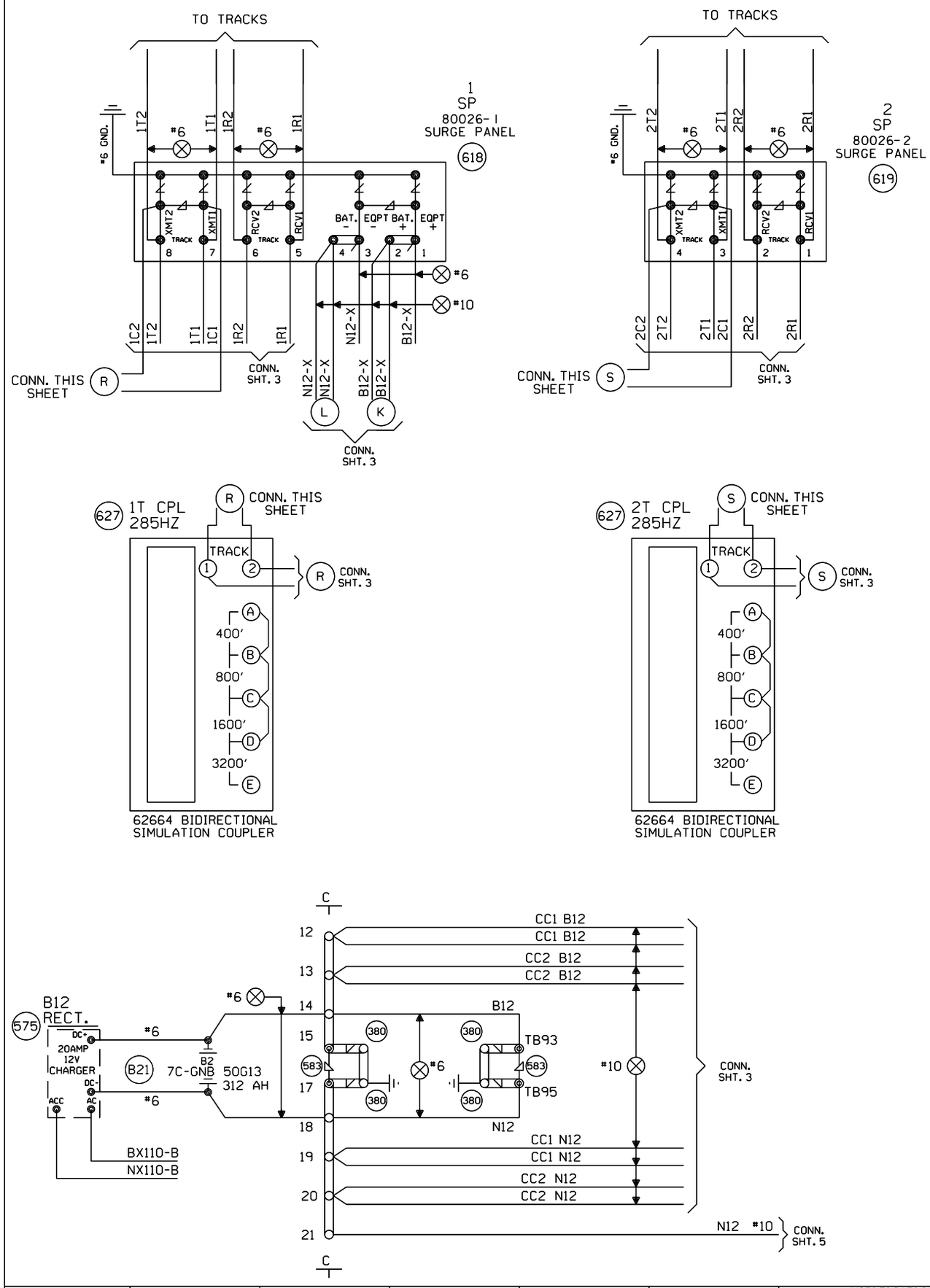

NEW SHEET

					Designed: 7/12/10 INSTALL FLASHERS W/GATES & CWT. M.P. 324.68 TR 262 Rec#: WO#: 06021 IS: /BDF /XRL/JTB	MODIFICATION LEVEL		UNION PACIFIC QUALITY PRODUCTIVITY SAFETY SIGNAL DESIGN	Date: 07/12/10 Des: XRL Chk: BDF AFE: 06021	UNION PACIFIC RAILROAD DE SOTO, ILLINOIS TR 262 MT. VERNON SUBDIVISION Office of Sr AVP Engineering - Signal/TCO Omaha, Nebraska	Sh.: 4 DOT 431054V MP: 324.68 ID: 127732468.4X
						Q.A. LAST LEVEL CHECKED	DU				
						LAST LEVEL MOD THIS TYPICAL	DU				
						LAST LEVEL BY DESIGNER	DU				
						CHANGED FROM TYPICAL? REV 01.24.11 4K 4TKSPGFC.4	Y				

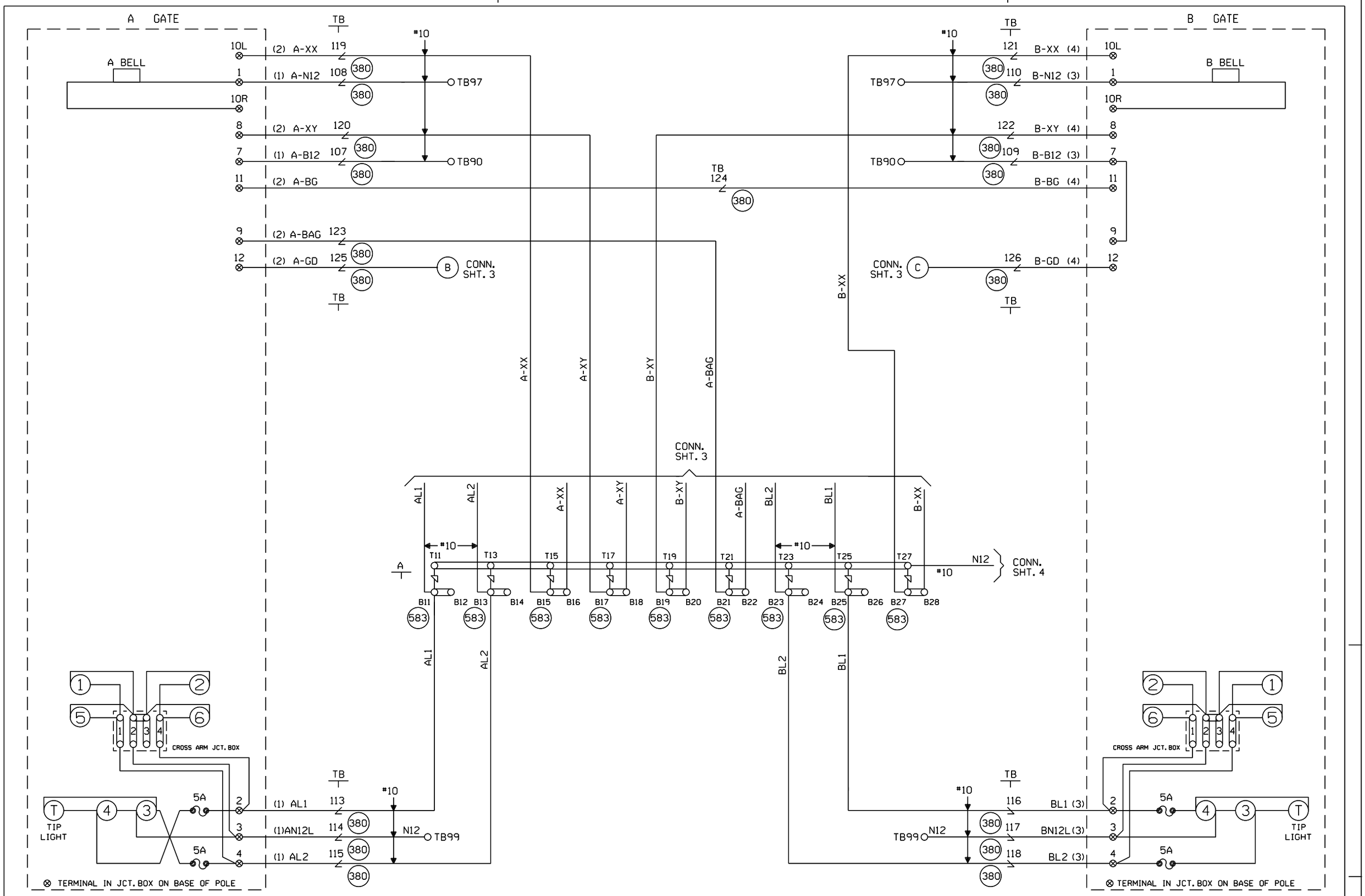

CABLE TABULATION

CABLE NO. 1 5C. NO.6 U.G.B.T. TO GATE A
CABLE NO. 2 7C. NO.14 U.G.B.T. TO GATE A
CABLE NO. 3 5C. NO.6 U.G.B.T. TO GATE B
CABLE NO. 4 7C. NO.14 U.G.B.T. TO GATE B

NEW SHEET

Designed: 7/12/10
INSTALL FLASHERS W/GATES & CWT.
M.P. 324.68
TR 262

Rec#: WO#: 06021
IS: /BDF
/ /XRL/JTB

MODIFICATION LEVEL	
O.A. LAST LEVEL CHECKED	DU
LAST LEVEL MOD THIS TYPICAL	DU
LAST LEVEL BY DESIGNER	DU
CHANGED FROM TYPICAL?	Y
REV 01.24.11 4K GFCTYP.5	

UNION PACIFIC
QUALITY PRODUCTIVITY SAFETY
SIGNAL DESIGN

Date: 07/12/10
Des: XRL
Chk: BDF
AFE: 06021

UNION PACIFIC RAILROAD
DE SOTO, ILLINOIS
TR 262
MT. VERNON SUBDIVISION
Office of Sr AVP Engineering - Signal/TCO Omaha, Nebraska

Sh.: 5
DOT 431054V
MP: 324.68
ID: 127732468.5X

WCH 3593-E

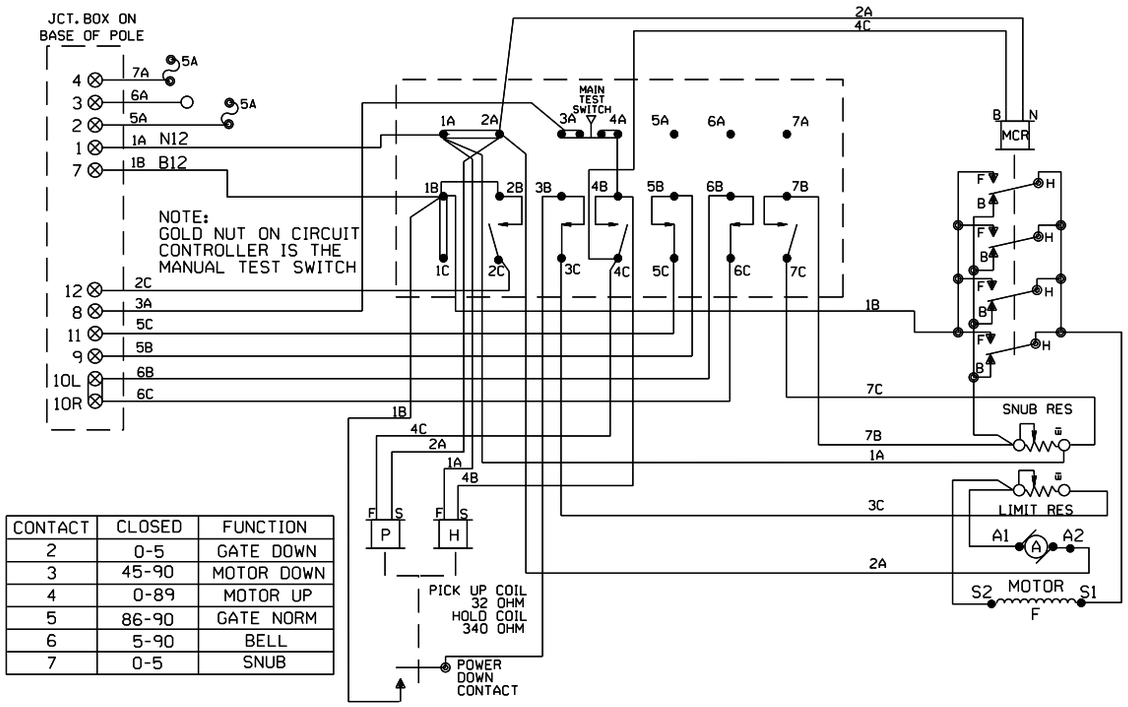

CONTACT	CLOSED	FUNCTION
2	0-5	GATE DOWN
3	45-90	MOTOR DOWN
4	0-89	MOTOR UP
5	86-90	GATE NORM
6	5-90	BELL
7	0-5	SNUB

WCH 3597-E

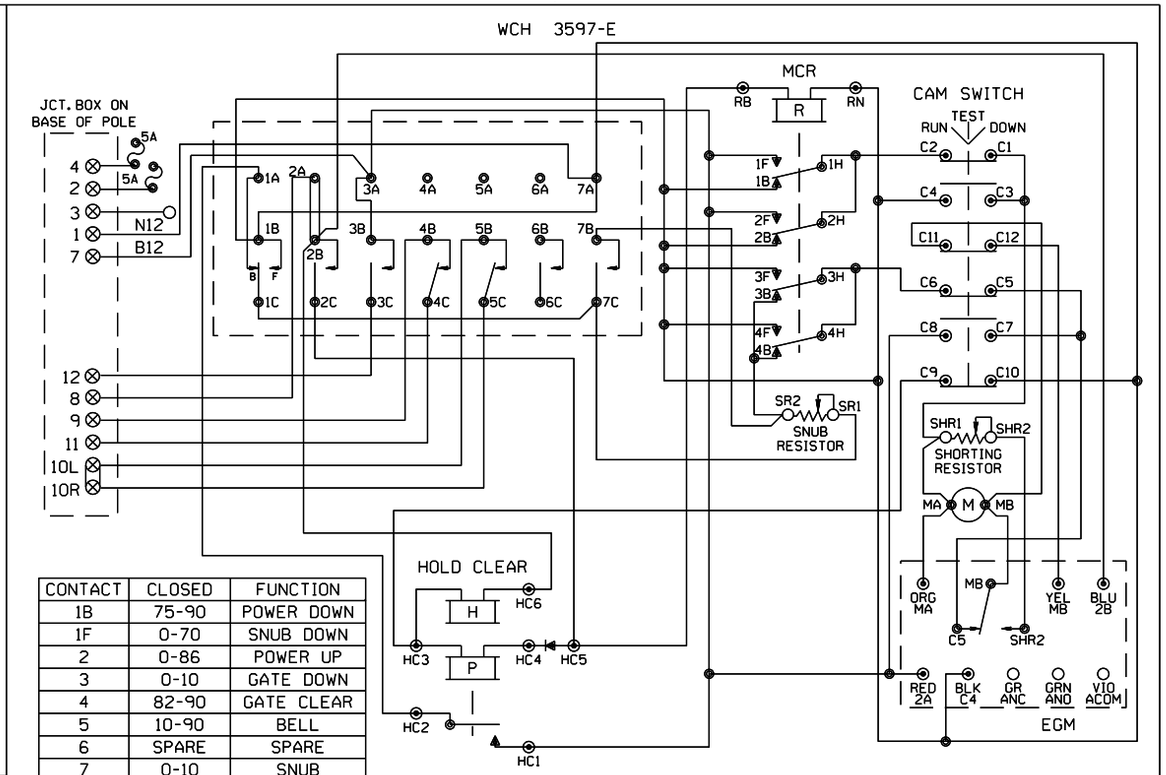

CONTACT	CLOSED	FUNCTION
1B	75-90	POWER DOWN
1F	0-70	SNUB DOWN
2	0-86	POWER UP
3	0-10	GATE DOWN
4	82-90	GATE CLEAR
5	10-90	BELL
6	SPARE	SPARE
7	0-10	SNUB

WCH 3597-RB

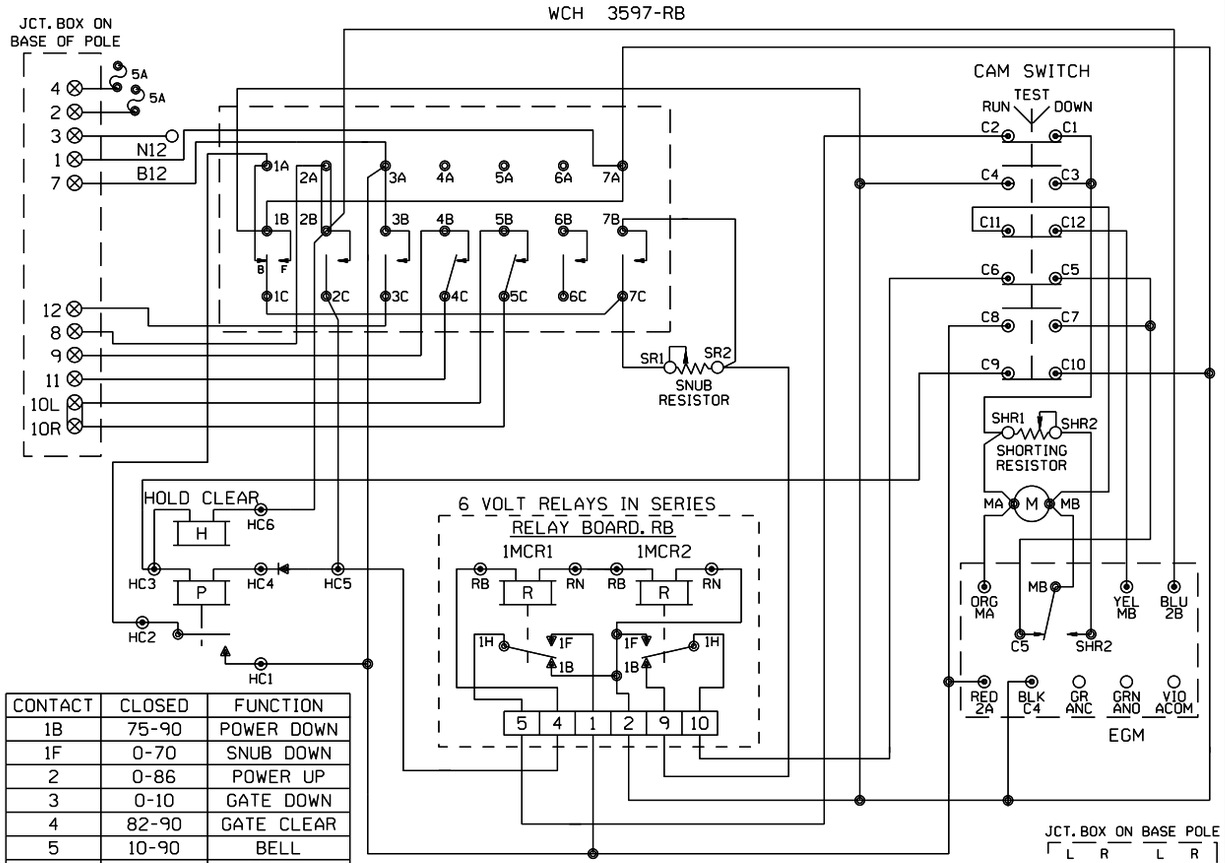

CONTACT	CLOSED	FUNCTION
1B	75-90	POWER DOWN
1F	0-70	SNUB DOWN
2	0-86	POWER UP
3	0-10	GATE DOWN
4	82-90	GATE CLEAR
5	10-90	BELL
6	SPARE	SPARE
7	0-10	SNUB

JCT. BOX ON BASE POLE

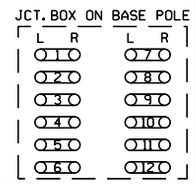

SHOW TYPE MECH. INSTALLED

ALL MECHANISMS SHOWN IN THE CLEAR POSITION

SAFETRAN S-60

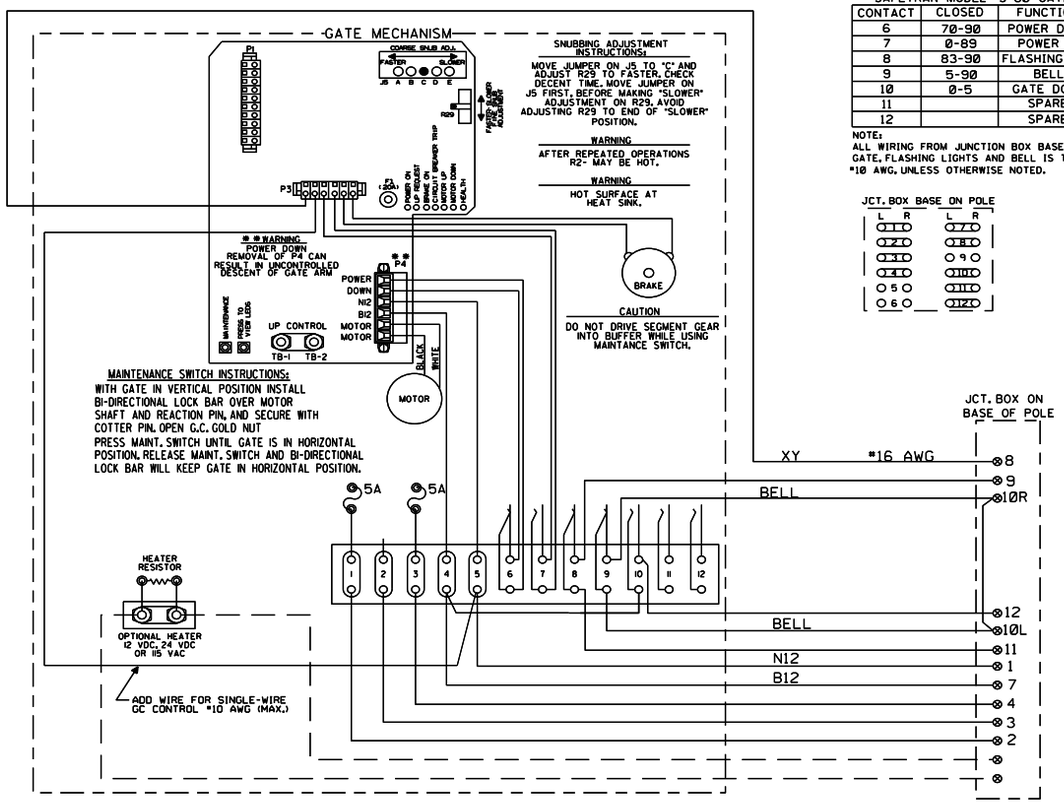

SAFETRAN MODEL "S-60" GATE

CONTACT	CLOSED	FUNCTION
6	70-90	POWER DOWN
7	0-89	POWER UP
8	83-90	FLASHING LGT.
9	5-90	BELL
10	0-5	GATE DOWN
11		SPARE
12		SPARE

NOTE:
ALL WIRING FROM JUNCTION BOX BASE TO GATE, FLASHING LIGHTS AND BELL IS TO BE #10 AWG, UNLESS OTHERWISE NOTED.

JCT. BOX BASE ON POLE

NEW SHEET

Designed: 7/12/10
INSTALL FLASHERS W/GATES & CWT.
M.P. 324.68
TR 262

Rec#:
IS:
WO#: 06021
/BDF
/XRL/JTB

MODIFICATION LEVEL	
O.A. LAST LEVEL CHECKED	DU
LAST LEVEL MOD THIS TYPICAL	DU
LAST LEVEL BY DESIGNER	DU
CHANGED FROM TYPICAL?	N

REV 01.24.11 4K GWIRING.7

UNION PACIFIC
QUALITY PRODUCTIVITY SAFETY
SIGNAL DESIGN

Date: 07/12/10
Des: XRL
Chk: BDF
AFE: 06021

UNION PACIFIC RAILROAD

DE SOTO, ILLINOIS
TR 262
MT. VERNON SUBDIVISION

Office of Sr AVP Engineering - Signal/TCO Omaha, Nebraska

Sh.: 6
DOT 431054V
MP: 324.68
ID: 127732468.6X

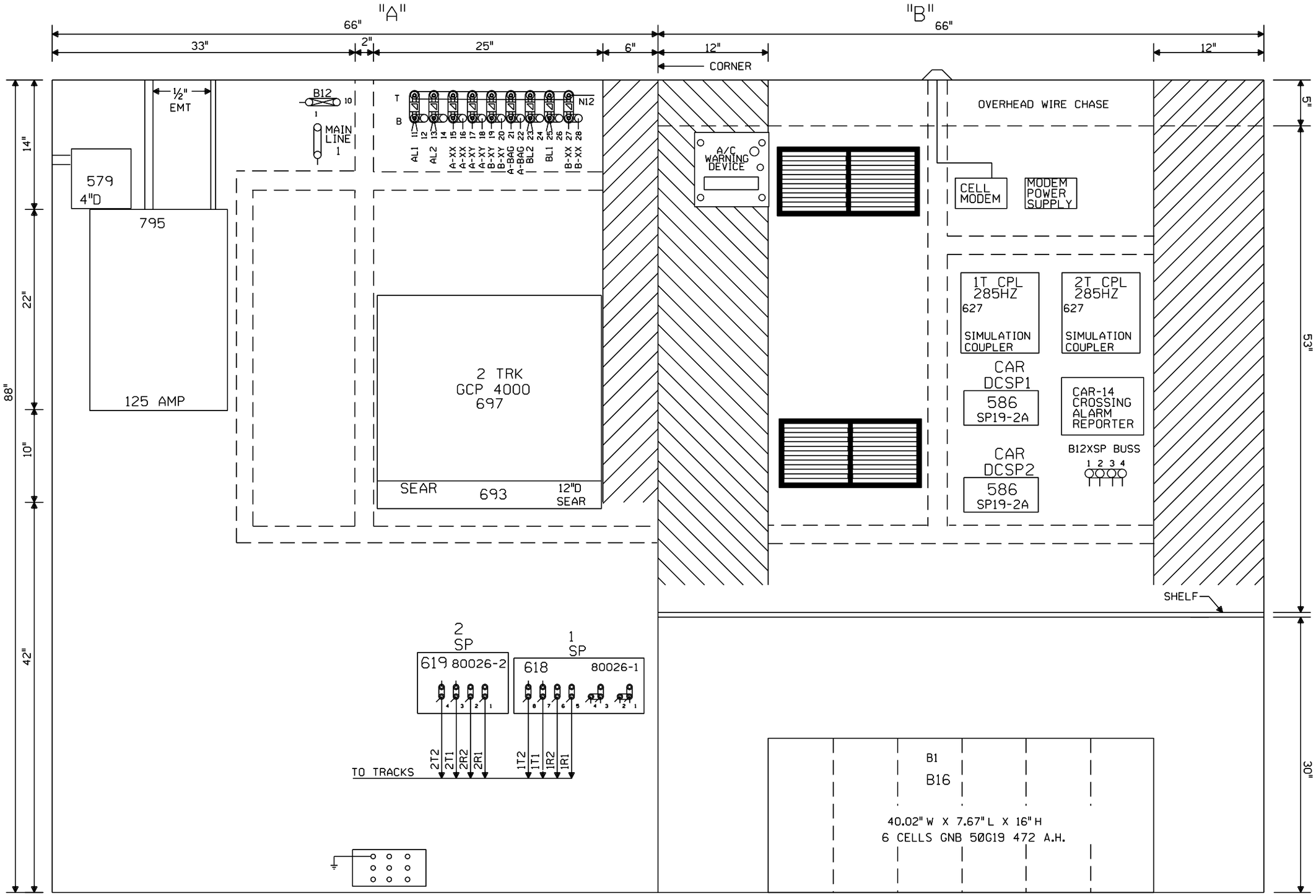

NOTE: ALL DIMENSIONS SHOWN ARE APPROXIMATE.

NEW SHEET

					Designed: 7/12/10 INSTALL FLASHERS W/GATES & CWT. M.P. 324.68 TR 262	MODIFICATION LEVEL		UNION PACIFIC SIGNAL DESIGN	Date: 07/12/10	UNION PACIFIC RAILROAD	Sh.: 7
						Q.A. LAST LEVEL CHECKED	DU		Des: XRL	DE SOTO, ILLINOIS	DOT 431054V
						LAST LEVEL MOD THIS TYPICAL	DU		Chk: BDF	TR 262	MP: 324.68
					Rec#: WO#: 06021	LAST LEVEL BY DESIGNER	DU		AFE: 06021	MT. VERNON SUBDIVISION	ID: 127732468.7X
					IS: /BDF / /XRL/JTB	CHANGED FROM TYPICAL?	Y			Office of Sr AVP Engineering - Signal/TCO Omaha, Nebraska	
						REV 01.24.11 4K 4TKGFC.8					

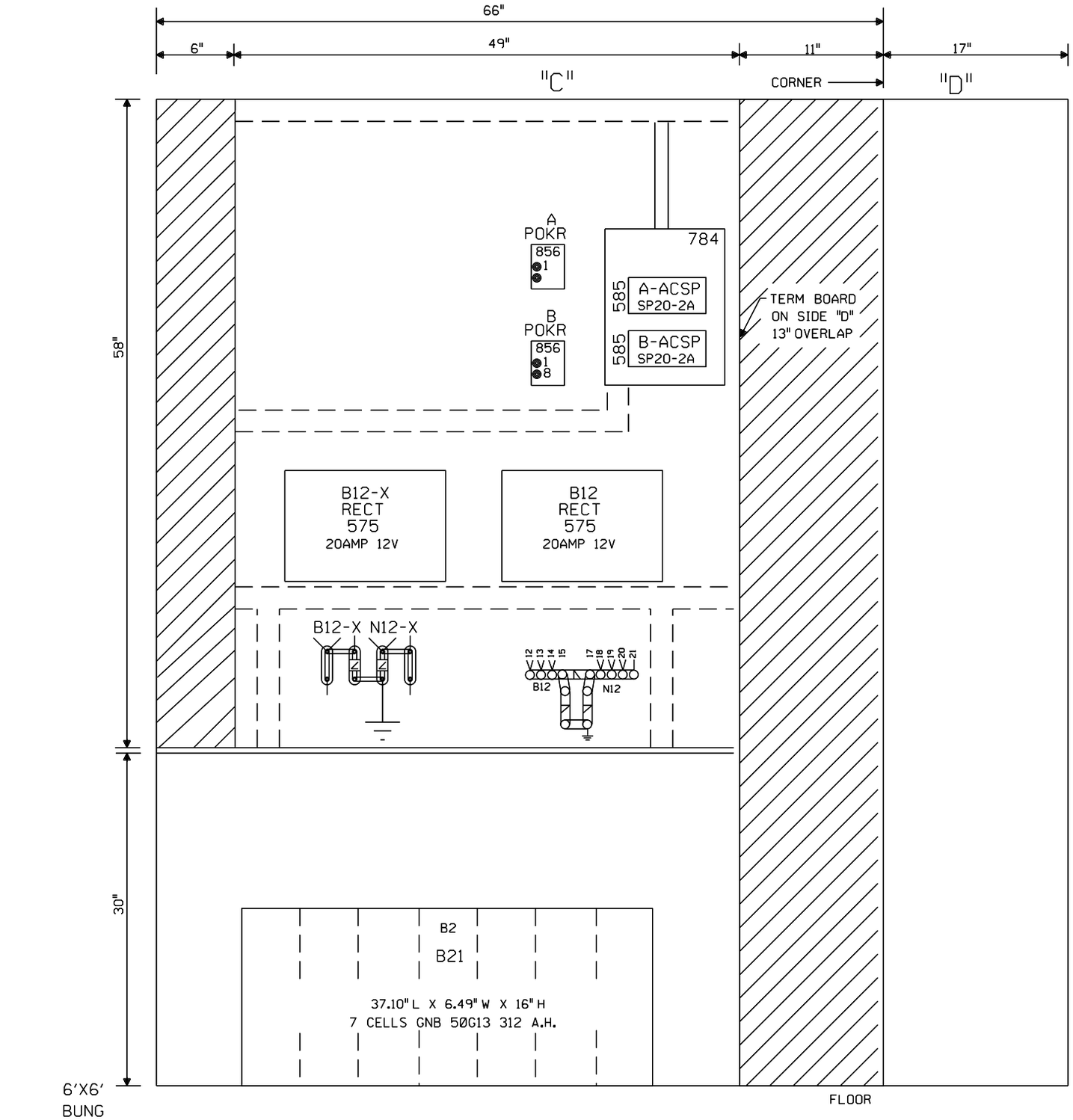

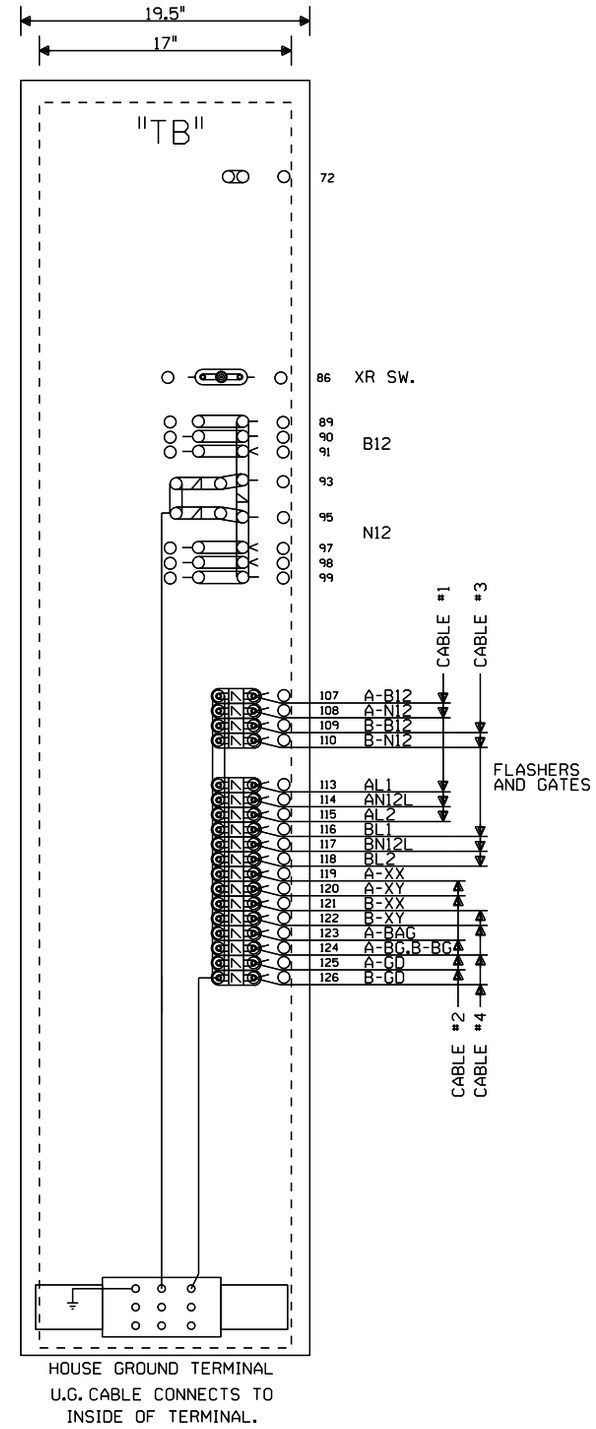

NOTE: ALL DIMENSIONS SHOWN
ARE APPROXIMATE.

NEW SHEET

Designed: 7/12/10
INSTALL FLASHERS
W/GATES & CWT.
M.P. 324.68
TR 262

Rec#: WO#: 06021
IS: /BDF
/ /XRL/JTB

MODIFICATION LEVEL	
Q. A. LAST LEVEL CHECKED	DU
LAST LEVEL MOD THIS TYPICAL	DU
LAST LEVEL BY DESIGNER	DU
CHANGED FROM TYPICAL?	Y

Rev 01.24.11 4K GFC.9

UNION PACIFIC
QUALITY PRODUCTIVITY SAFETY
SIGNAL DESIGN

Date: 07/12/10
Des: XRL
Chk: BDF
AFE: 06021

UNION PACIFIC RAILROAD
DE SOTO, ILLINOIS
TR 262
MT. VERNON SUBDIVISION
Office of Sr AVP Engineering - Signal/TCO Omaha, Nebraska

Sh.: 8
DOT 431054V
MP: 324.68
ID: 127732468.8X