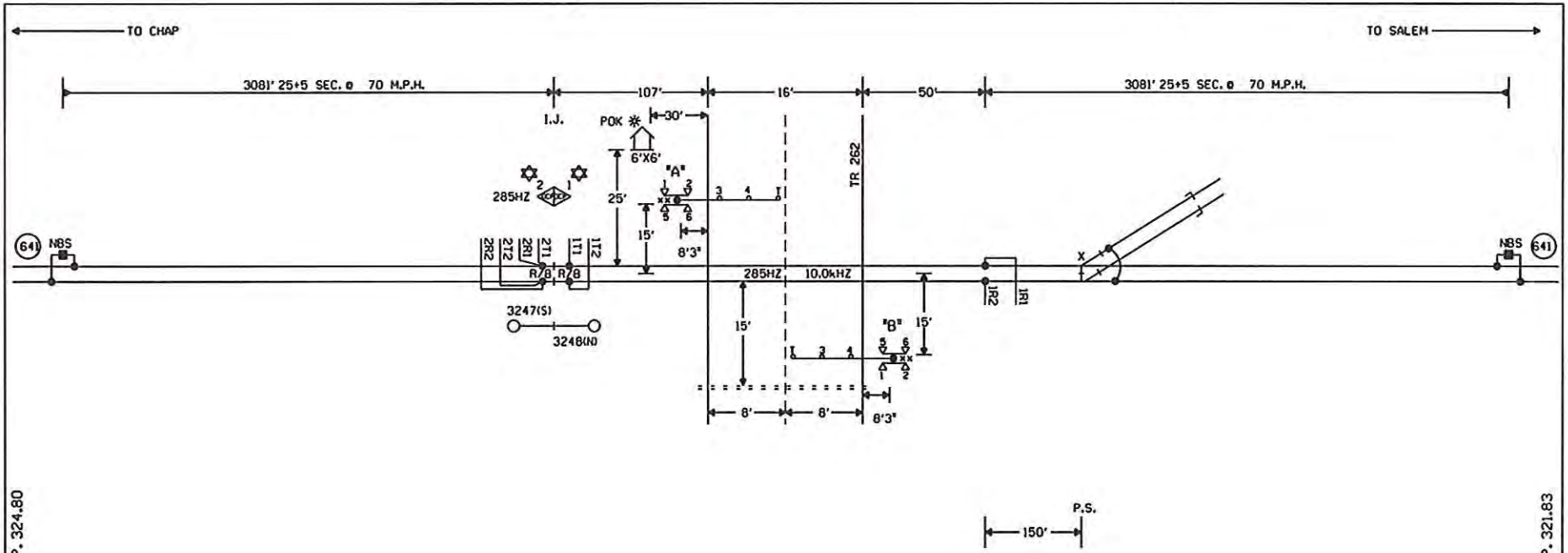

CONNECTS TO M.P. 324.80

CONNECTS TO M.P. 321.83

NOTES:

⊗ = TWISTED WIRES
INSULATED 1 TWIST PER FT.
ALL TRACK WIRES 2C. #6

TRANSMITTER AND RECEIVER LEADS TO BE SEPARATED BY AT LEAST 12" IN TRENCH, LENGTHS SHOULD NOT EXCEED MANUFACTURES RECOMMENDATION.

TOP OF FOUNDATION TO BE AT SAME ELEVATION AS THE SURFACE OF THE TRAVELED WAY & NO MORE THAN 4" ABOVE THE SURFACE OF THE GROUND.

ALL BUNGALOW WIRING TO BE #16 AWG FLEX UNLESS OTHERWISE SPECIFIED EXCEPT ALL GROUND WIRE TO BE #6 AWG FLEX OR LARGER.

ALL WIRING IN GATE MECHANISM TO BE #10 AWG FLEX.

REFER TO UP STANDARD DWG FOR BUNGALOW GROUNDING.

PORTABLE GENERATOR EXTENSION CORD FOR 240V TO 240V IS PROVIDED AS WELL AS A 120V TO 240V ADAPTER.

ALL LIGHTS TO BE 12" ROUNDELS.

= = = = = = 4" X 40' CONDUIT

LIGHTS: LED LIGHTS

GATE A: 16'
GATE B: 16'

xx = BELL

✡ = GCP TO OPERATE IN SEMI-BI DIRECTIONAL MODE. USE TAB 627 COUPLER.

W(S) ← → E(N)

NEW SHEET

Date: 07/12/10	
Dsn: XRL	
Chk: RLT	
AFE: 06021	

MODIFICATION LEVEL	
D.A. LAST LEVEL CHECKED	OU
LAST LEVEL MOD THIS TYPICAL	OU
LAST LEVEL BY DESIGNER	OU
CHANGED FROM TYPICAL?	Y

Date: 7/12/10 INSTALL FLASHERS W/GATES & CVT. M.P. 324.68 TR 262

Rev: 1b WO: 06021 /RLT

UNION PACIFIC SIGNAL DESIGN

UNION PACIFIC RAILROAD

DE SOTO, ILLINOIS
TR 262
MT. VERNON SUBDIVISION

Office of Sr. VP Engineering - Signal/ICO Omaha, Nebraska

Sht:	1
DOT	431054V
MP:	324.68
ID:	127732468.1X

...\000E287\Desktop\127732468.1X 12/20/2012 12:37:20 PM

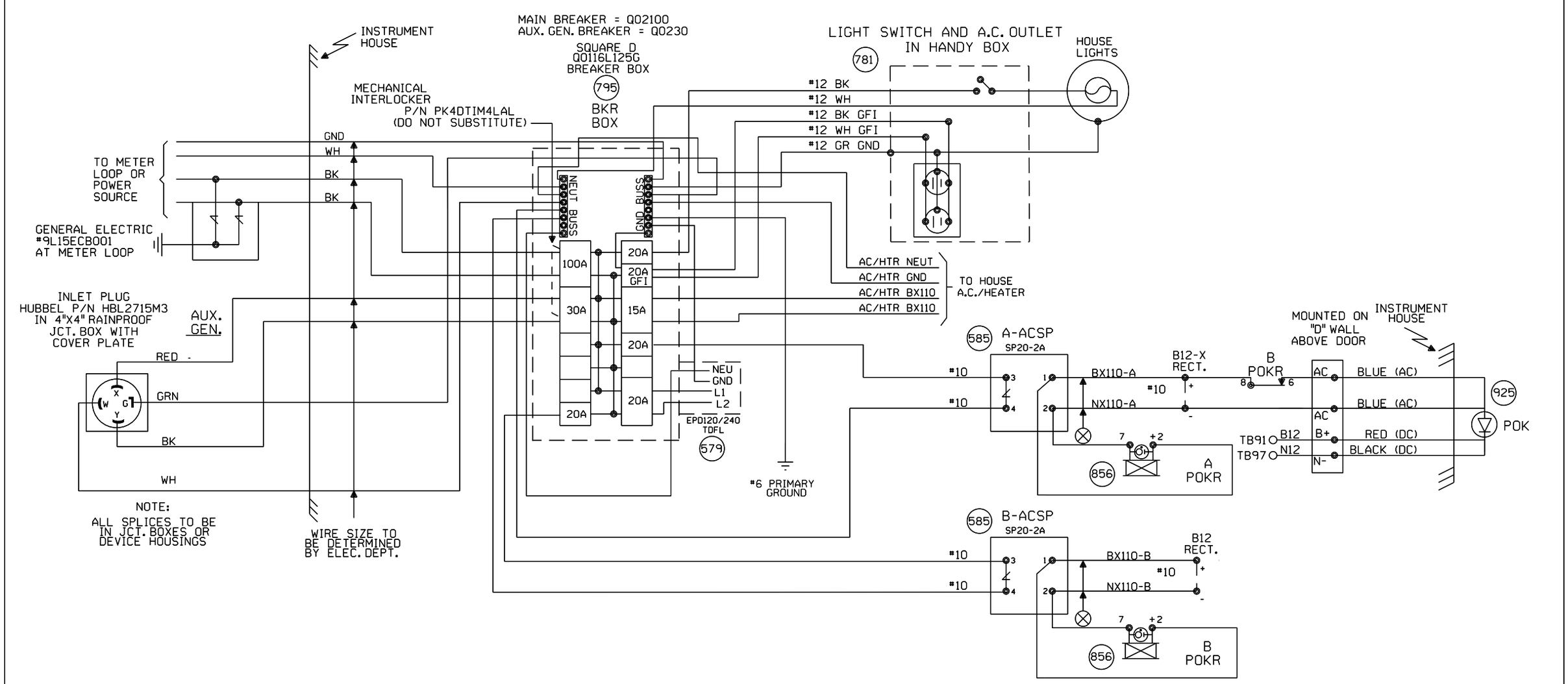

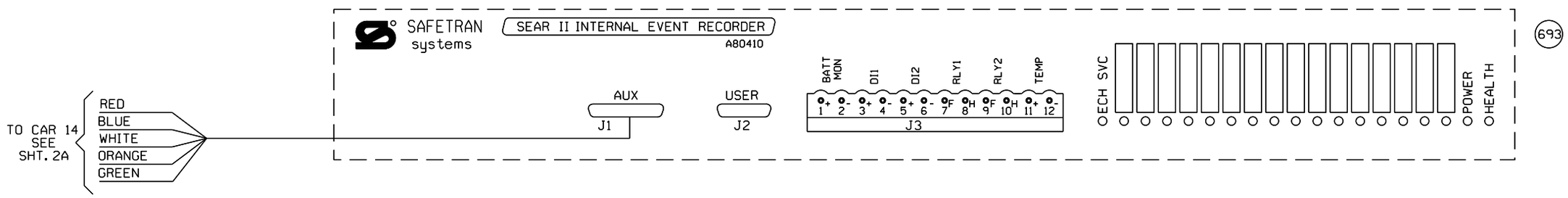

CABLE TO BE USED
WITH CAR REPORTER/RECORDER
PART # A26654-2
UP PART # 520-4056

NEW SHEET

					Designed: 7/12/10 INSTALL FLASHERS W/GATES & CWT. M.P. 324.68 TR 262	MODIFICATION LEVEL		UNION PACIFIC	Date: 07/12/10	UNION PACIFIC RAILROAD	Sh.: 2
						O.A. LAST LEVEL CHECKED	DU	QUALITY PRODUCTIVITY SAFETY	Des: XRL	DE SOTO, ILLINOIS	DOT 431054V
						LAST LEVEL MOD THIS TYPICAL	DU		Chk: BDF	TR 262	MP: 324.68
						LAST LEVEL BY DESIGNER	DU			MT. VERNON SUBDIVISION	
					Rec#: WO#: 06021 /BDF IS: / /XRL/JTB	CHANGED FROM TYPICAL?	Y	SIGNAL DESIGN	AFE: 06021	Office of Sr AVP Engineering - Signal/TCO Omaha, Nebraska	ID: 127732468.2X
						REV 01.24.11 4K SEARAC.2					

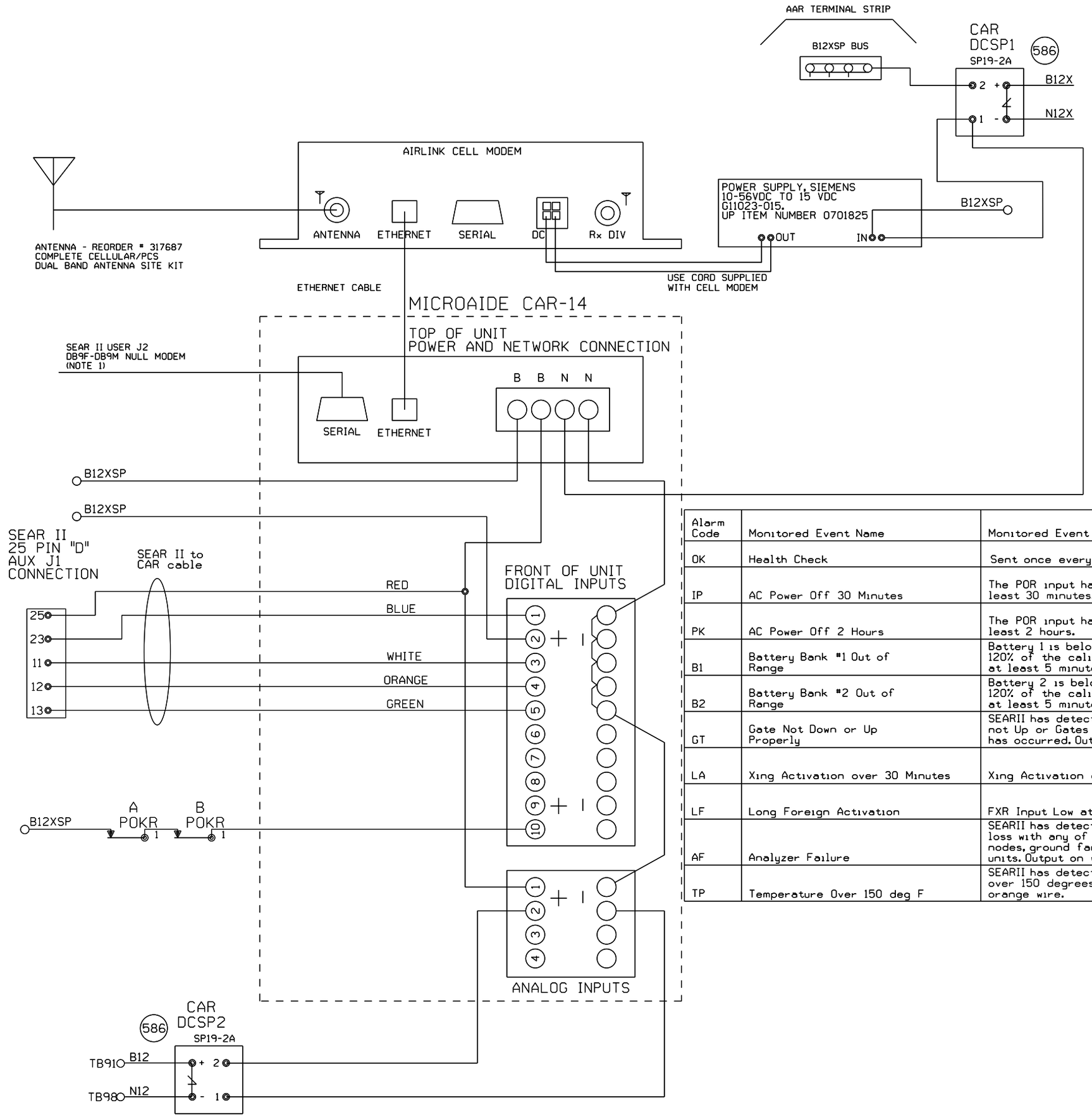

NOTE:
1) AT LOCATIONS WITH NO FOREIGN XR, JUMPER D2 TO B12XSP.
2) THE CAR14 SERIAL PORT IS AVAILABLE TO ADD REMOTE CONNECTIVITY TO THE SEARII. USE A DB9F TO DB9M NULL MODEM SERIAL CABLE.

ANALOG INPUTS:
A1) B12X BATTERY BANK, JUMPERED FROM CAR14 POWER INPUTS
A2) B12 BATTERY BANK
A3) AND A4) ARE AVAILABLE TO MONITOR ADDITIONAL BATTERY BANKS.

DIGITAL INPUTS (LOCATIONS WITH SEARII)
1) XR (BLUE WIRE)
2) FXR (FROM B12XSP THRU FRONT CONTACT)
3) ANALYZER FAILURE (WHITE WIRE)
4) HIGH TEMPERATURE (ORANGE WIRE)
5) GATES NOT UP OR DOWN PROPERLY (GREEN WIRE)
6)
7)
8)
9)
10) POWER OFF INDICATION: POR

Alarm Code	Monitored Event Name	Monitored Event Description	Alarm Cleared
OK	Health Check	Sent once every 48 hours.	
IP	AC Power Off 30 Minutes	The POR input has been down for at least 30 minutes.	The POR input comes back on for at least 5 minutes after an AC Power Off Alarm
PK	AC Power Off 2 Hours	The POR input has been down for at least 2 hours.	The POR input comes back on for at least 5 minutes after an AC Power Off Alarm
B1	Battery Bank #1 Out of Range	Battery 1 is below 81% or above 120% of the calibrated value for at least 5 minutes.	Battery 1 is within acceptable range for at least 5 minutes.
B2	Battery Bank #2 Out of Range	Battery 2 is below 81% or above 120% of the calibrated value for at least 5 minutes.	Battery 2 is within acceptable range for at least 5 minutes.
GT	Gate Not Down or Up Properly	SEARII has detected either a Gates not Up or Gates not Down alarm has occurred. Output on green wire.	The Gate Up or Gates Down indications indicated true after a Gate Not Down or Gate Not Up alarm was triggered.
LA	Xing Activation over 30 Minutes	Xing Activation over 30 Minutes	Crossing has recovered after a Long Activation Alarm had occurred.
LF	Long Foreign Activation	FXR Input Low at least 30 Minutes	FXR Input for 10 Sec.
AF	Analyzer Failure	SEARII has detected communication loss with any of its installed echelon nodes, ground fault detectors, or TSS units. Output on white wire.	Analyzer has recovered after an analyzer failure.
TP	Temperature Over 150 deg F	SEARII has detected temperature over 150 degrees F. Output on orange wire.	Temperature sensor inside SEAR detects temperature is OK after a Hi-Temp alarm.

NEW SHEET

Designed: 7/12/10
INSTALL FLASHERS
W/GATES & CWT.
M.P. 324.68
TR 262

Rec#: WO#: 06021
IS: /BDF
/ /XRL/JTB

MODIFICATION LEVEL	
O.A. LAST LEVEL CHECKED	DU
LAST LEVEL MOD THIS TYPICAL	DU
LAST LEVEL BY DESIGNER	DU
CHANGED FROM TYPICAL?	Y

REV 01.24.11 4K ACDCCAR14SII.3

UNION PACIFIC
QUALITY PRODUCTIVITY SAFETY
SIGNAL DESIGN

Date: 07/12/10
Des: XRL
Chk: BDF
AFE: 06021

UNION PACIFIC RAILROAD

DE SOTO, ILLINOIS
TR 262
MT. VERNON SUBDIVISION

Office of Sr AVP Engineering - Signal/TCO Omaha, Nebraska

Sh.: 2A
DOT 431054V
MP: 324.68
ID: 127732468.2AX

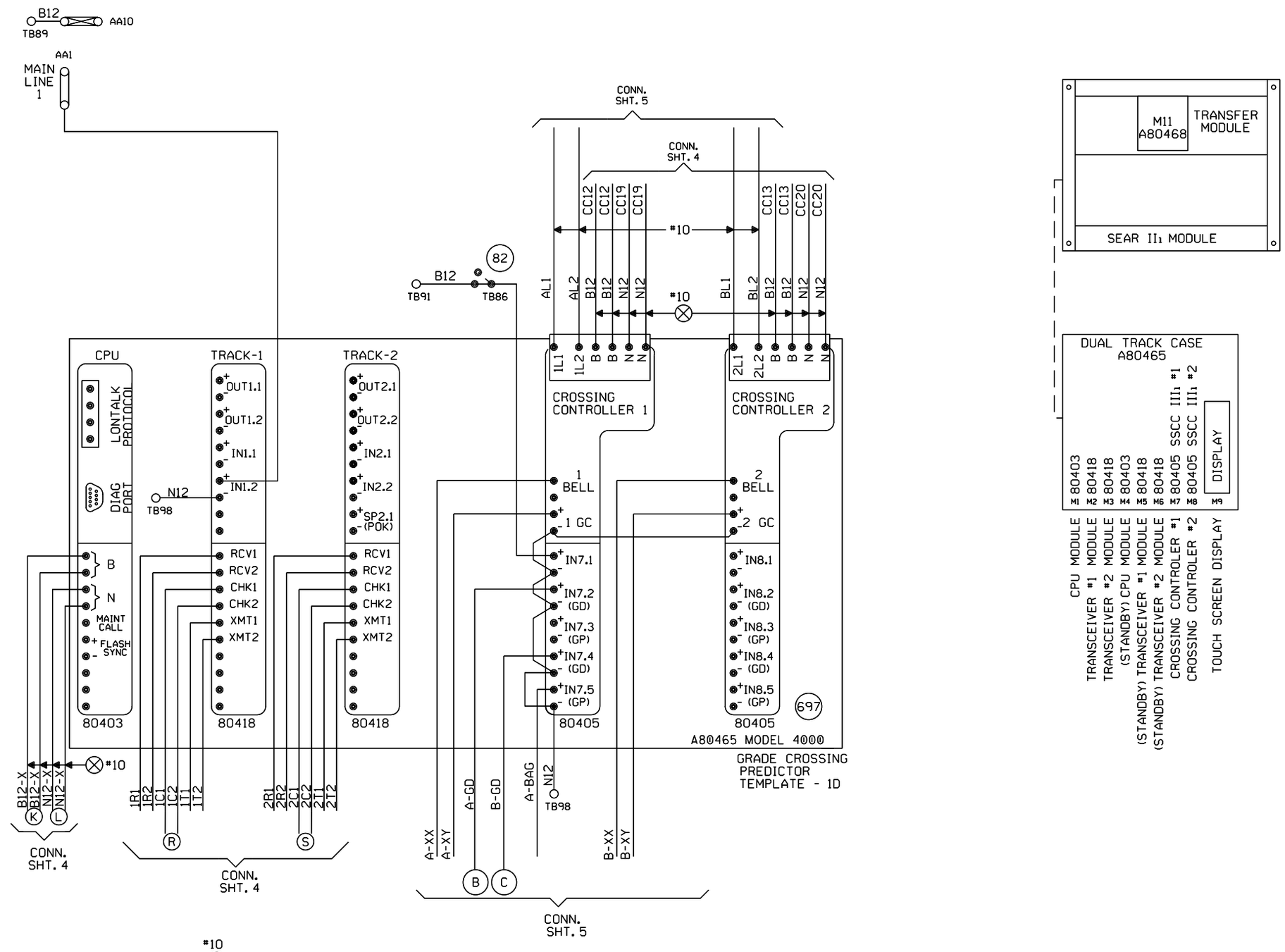

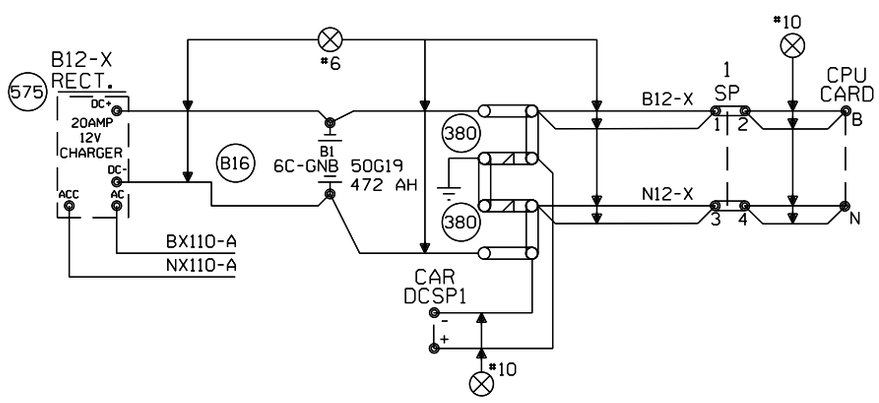

"Mf" FREQUENCY (HZ)	MAXIMUM TRANSMIT WIRE LENGTH (FEET)
86	100
114	125
156	150
211	200
285-970	250

NOTE:
EACH TRANSMITTER TO RAIL WIRE FROM XMT1 AND XMT2 MUST NOT EXCEED THE MAXIMUM LENGTH SPECIFIED IN THE TABLE SHOWN. THE RECEIVER WIRE LENGTH IS NOT CRITICAL. DOES NOT APPLY TO 6 TRACK WIRE APPLICATION.

NEW SHEET

Designed: 7/12/10
INSTALL FLASHERS W/GATES & CWT.
M.P. 324.68
TR 262

Rec#:
IS:
WO#: 06021
/BDF
/XRL /JTB

MODIFICATION LEVEL	
Q. A. LAST LEVEL CHECKED	DU
LAST LEVEL MOD THIS TYPICAL	DU
LAST LEVEL BY DESIGNER	DU
CHANGED FROM TYPICAL?	Y

REV 01.24.11 4K 2TKGF.3

UNION PACIFIC
QUALITY PRODUCTIVITY SAFETY
SIGNAL DESIGN

Date: 07/12/10
Des: XRL
Chk: BDF
AFE: 06021

UNION PACIFIC RAILROAD
DE SOTO, ILLINOIS
TR 262
MT. VERNON SUBDIVISION
Office of Sr AVP Engineering - Signal/TCO Omaha, Nebraska

Sh.: 3
DOT 431054V
MP: 324.68
ID: 127732468.3X