CHECKING

eff-160.65-0.dgn
11-JUN-2012

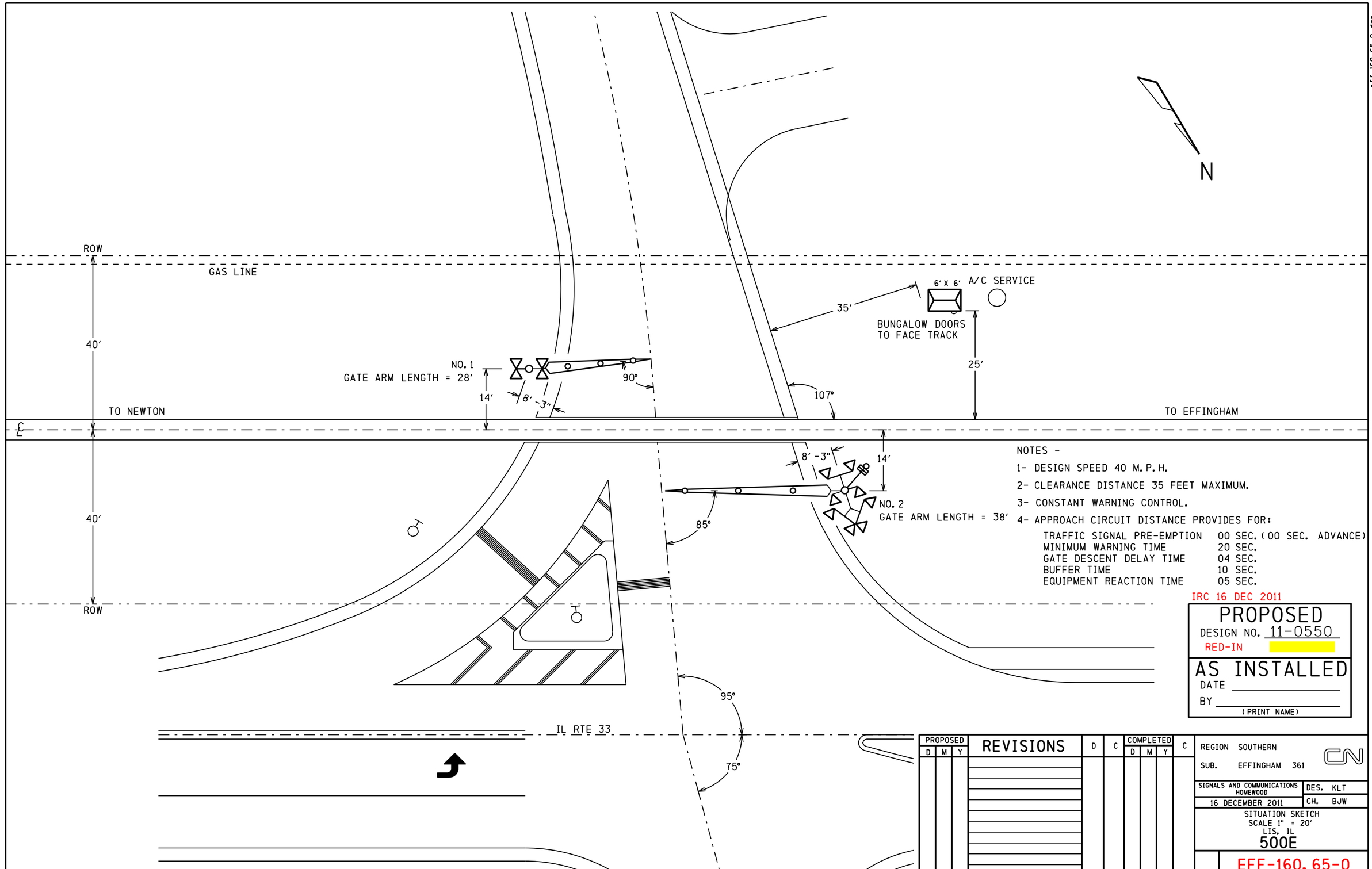

NOTES -

1- DESIGN SPEED 40 M.P.H.

2- CLEARANCE DISTANCE 35 FEET MAXIMUM.

3- CONSTANT WARNING CONTROL.

4- APPROACH CIRCUIT DISTANCE PROVIDES FOR:

TRAFFIC SIGNAL PRE-EMPTION	00 SEC. (00 SEC. ADVANCE)
MINIMUM WARNING TIME	20 SEC.
GATE DESCENT DELAY TIME	04 SEC.
BUFFER TIME	10 SEC.
EQUIPMENT REACTION TIME	05 SEC.

IRC 16 DEC 2011

PROPOSED
DESIGN NO. 11-0550
RED-IN

AS INSTALLED
DATE
BY
(PRINT NAME)

PROPOSED D	M	Y	REVISIONS	D	C	COMPLETED D	M	Y	C

REGION SOUTHERN
SUB. EFFINGHAM 361

SIGNALS AND COMMUNICATIONS HOMEWOOD
16 DECEMBER 2011
DES. KLT
CH. BJW

SITUATION SKETCH
SCALE 1" = 20'
LIS, IL
500E

EFF-160.65-0

DOT# 292 627R

INVENSYS RAIL CORP.
LOUISVILLE DIVISION, LOUISVILLE, KY

CHECKING

eff-160.65-01.dgn
11-JUN-2012

REVISIONS			
NO.	DATE	BY	DESCRIPTION	APP. BY
1				
2				
3				
4				
5				

FLASHING LIGHT UNITS ALIGNMENT TABLE

PRIMARY FRONT LIGHTS FOR VEHICLES							
SIG #	LIGHT #	ROUNDEL		ROAD SPEED	MINIMUM DISTANCE	RECOMMENDED DISTANCE	ALIGNMENT DISTANCE
		SIZE	TYPE	MPH	FT	FT	FT
1	1,2	12"	LED	55	625	950	
2	7,8	12"	LED	55	625	950	
2	9,10	12"	LED	55	625	950	
2	11,12	12"	LED	55	625	950	
BACK LIGHTS FOR VEHICLES							
SIG #	LIGHT #	ROUNDEL		ROAD SPEED	MINIMUM DISTANCE	RECOMMENDED DISTANCE	ALIGNMENT DISTANCE
		SIZE	TYPE	MPH	FT	FT	FT
1	3,4	12"	LED	N/A	N/A	N/A	50
2	5,6	12"	LED	N/A	N/A	N/A	50

NOTE
FIELD IS TO PROVIDE THE ACTUAL ALIGNMENT DISTANCE AS DETERMINED BY
SCP-706: ROAD CROSSING DEVICE LIGHT UNIT ALIGNMENT PROCEDURES

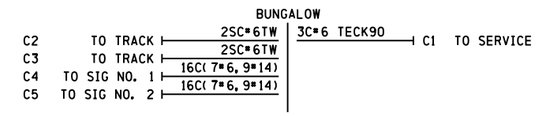

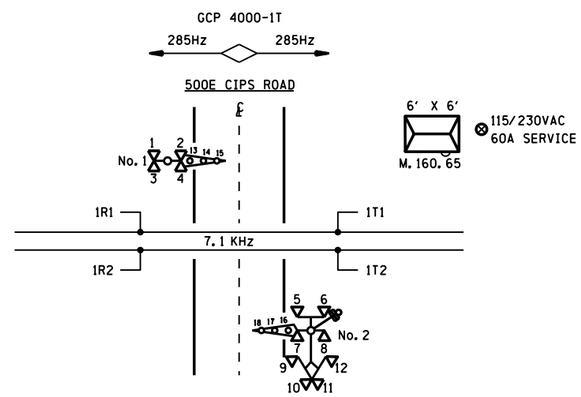

CONTENT	SHEET #
SITUATION SKETCH	0
TRACK LAYOUT & INDEX	01
GCP 4000 CHASSIS & MODULE LAYOUT	02
GCP 4000 PROGRAM INFORMATION	03
GCP 4000/SEAR III SETUP & PROGRAM	04
GCP 4000 CALIBRATION HISTORY	05
GCP 4000 TRACK 1 & 2 MODULE CONNECTIONS	06
GCP 4000 CPUII+ & VHF COMMUNICATOR	07
GCP 4000/SEARIII WITH GFT & CRTU	08
GCP 4000/SSCCIIII GATE CONTROLLERS W/ ILODS	09
GATE 1 & 2 MECH. CONTROL CIRCUITS SAFETRAN S-60	10
DC DISTRIBUTION	11
AC DISTRIBUTION	12
BUNGALOW LAYOUT TOP VIEW	13
BUNGALOW LAYOUT SIDE D & L.I.G.P.	14
BUNGALOW LAYOUT SIDES A, B & C	15

INVENSYS RAIL CORPORATION		
DES.: SIA	DATE: 21/12/11	JOB NO.: PICA10343
CKD.: BJW	ISSUE DATE: N/A	EST. NO.: XP-6173
DRN.: SIA	PLAN NO.: N/A	SHEET 1 OF 15
P TIME: 08:42	P DATE: $$PLOT_DATE	CAD ID.: EFF-160.65-01

IRC 20 DEC 2011

PROPOSED
DESIGN NO. 11-0550
RED-IN YELLOW-OUT

AS INSTALLED
DATE _____
BY _____
(PRINT NAME)

PROPOSED D	M	Y	REVISIONS	D	C	COMPLETED D	M	Y	C

REGION SOUTHERN
SUB. EFFINGHAM 361

SIGNALS AND COMMUNICATIONS HOMEWOOD
20 DECEMBER 2011
DES. SIA
CH. BJW

TRACK LAYOUT & INDEX

LIS. IL
500E

EFF-160.65-01

INVENSYS RAIL CORP.
LOUISVILLE DIVISION, LOUISVILLE, KY

DOT# 292 627R

15

CHECKING

eff-160.65-02.dgn
11-JUN-2012

REVISIONS				
NO.	DATE	BY	DESCRIPTION	APP. BY
1				
2				
3				
4				
5				

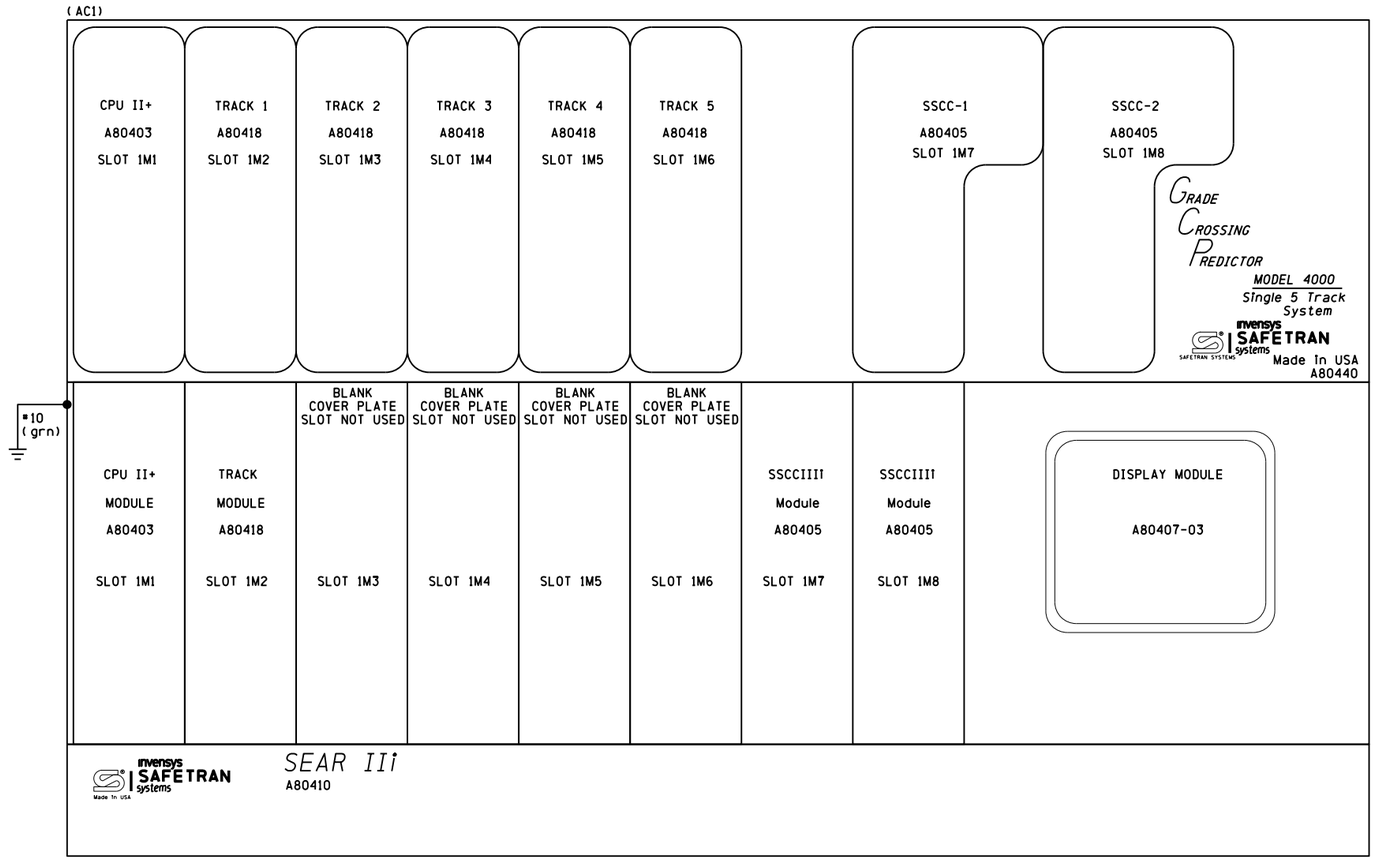

NOTES

1) DISABLE THE DISPLAY HEATER BY REMOVING JUMPER J-22 (LOCATED AT THE EDGE OF THE DISPLAY MODULE CARD THAT PLUGS INTO THE CHASSIS)

ATTENTION!

ENSURE THE DISPLAY MODULE HEATER IS DISABLED
LEAVING THE DISPLAY HEATER ENABLED WILL REDUCE THE AMOUNT OF BATTERY STANDBY TIME IN THE EVENT OF AN AC POWER FAILURE

HEATER FUNCTION IS JUMPER SELECTABLE ON THE DISPLAY MODULE BOARD
THREE OPTIONS ARE AVAILABLE
NORMAL LCD HTR (DEFAULT)
HI CURRENT
NO JUMPER (HEATER DISABLED)

IRC 20 DEC 2011

PROPOSED
DESIGN NO. 11-0550
RED-IN YELLOW-OUT

AS INSTALLED
DATE _____
BY _____
(PRINT NAME)

PROPOSED D	M	Y	REVISIONS	D	C	COMPLETED D	M	Y	C

REGION SOUTHERN
SUB. EFFINGHAM 361

SIGNALS AND COMMUNICATIONS HOMEWOOD
20 DECEMBER 2011
DES. SIA
CH. BJW

GCP 4000
CHASSIS & MODULE LAYOUT
LIS, IL
500E

EFF-160.65-02

DOT# 292 627R

INVENSYS RAIL CORPORATION

DES.: SIA	DATE: 21/12/11	JOB NO.: PICA10343	
CKD.: BJW	ISSUE DATE: N/A	EST. NO.: XP-6173	
DRN.: SIA	PLAN NO.: N/A	SHEET 2 OF 15	
P TIME: 08:42	P DATE: $$PLOT_DATE	CAD ID.: EFF-160.65-02	

INVENSYS RAIL CORP.
LOUISVILLE DIVISION, LOUISVILLE, KY

CHECKING

REVISIONS				
NO.	DATE	BY	DESCRIPTION	APP. BY
1				
2				
3				
4				
5				

Program Report

Location and SIN

DOT Number: 292627R
Milepost Number: 160.65
Site Name: 500E CIPS RD

SIN: 762010010016

MCF and Template Selection

MCF Name: GCP-T6X-02-2.mcf
MCF Revision: 022
MCFCRC: 79225F13

Template = 1A:6 Trk BI(OCCN)

Check Numbers

Office Check Number: 49F86FD6
Config. Check Number: 2CD5AA91
(Based on MCF Revision 022)

Program

BASIC: module configuration
Track 1/PSO 1 Slot = Track (OCCN)
Track 2/RIO 1 Slot = Not Used (OCCN)
Track 3/PSO 2 Slot = Not Used (OCCN)
Track 4/PSO 3 Slot = Not Used (OCCN)
Track 5/RIO 2 Slot = Not Used (OCCN)
Track 6/RIO 3 Slot = Not Used (OCCN)
SSCC-1 Slot = SSCC3I(OCCN)
SSCC-2 Slot = SSCC3I(OCCN)
SEAR Used = Yes (OCCN)

BASIC: MS/GCP operation
Track 1 : MS/GCP Operation = Yes (OCCN)

BASIC: island operation
Track 1 : Island Used = Internal(OCCN)

BASIC: preemption
Preempt Logic = No (OCCN)

BASIC: radio Dax links
Radio DAX link A Used = No (OCCN)
Radio DAX link B Used = No (OCCN)

BASIC: VitalComms links
VitalComms link 1 Used = No (OCCN)
VitalComms link 2 Used = No (OCCN)

PREDICTORS: track 1
Track 1 : Prime Used = Yes (OCCN)
Track 1 : Dax A Used = No (OCCN)
Track 1 : Dax B Used = No (OCCN)
Track 1 : Dax C Used = No (OCCN)
Track 1 : Dax D Used = No (OCCN)
Track 1 : Dax E Used = No (OCCN)
Track 1 : Dax F Used = No (OCCN)
Track 1 : Dax G Used = No (OCCN)

GCP: track 1
Track 1 : GCP Freq Category = Standard (Field)
Track 1 : GCP Frequency = 285 Hz (Field,TCN)
Track 1 : Approach Distance = 2070 ft (Field,TCN)
Track 1 : Uni/Bi/Sim-Bidirni = Bidirni(OCCN,TCN)
Track 1 : GCP Transmit Level = High (Field,TCN)
Track 1 : Island Connection = Isli(OCCN)
Track 1 : Directionally Wired = No (OCCN)
Track 1 : Island Distance = 140 ft (Field,TCN)
Track 1 : Computed Distance = 9999 ft (Field,TCN)
Track 1 : Linearization Steps = 100 (Field,TCN)

GCP: track 1 enhanced det
Track 1 : Inbound PS Sensitivity = High (Field)
Track 1 : Speed Limiting Used = Yes (Field)
Track 1 : Outbound False Act Lvl = Normal(Field)
Track 1 : Outbound PS Timer = 20 sec (Field)
Track 1 : Trailing Switch Logic = On (Field)
Track 1 : Post Joint Detn Time = 15 sec (OCCN)
Track 1 : Adv Appr Predn = No (OCCN)
Track 1 : CancelPickup Delay = This Isl(OCCN)

GCP: track 1 BIDAX RX
Track 1 : BIDAX To RX Appr = Not Used (OCCN)

GCP: track 1 BIDAX TX
Track 1 : BIDAX To TX Appr = Not Used (OCCN)

GCP: track 1 prime
Track 1 : Prime Warning Time = 30 sec (OCCN)
Track 1 : Prime Offset Distance = 0 ft (Field)
Track 1 : Switch MS EZ Level = 14 (OCCN)
Track 1 : Prime MS/GCP Mode = Pred (OCCN)
Track 1 : Prime Pickup Delay = 30 sec (OCCN)
Track 1 : Prime UAX = Not Used (OCCN)

GCP: track 1 pos start
Track 1 : Positive Start = Off (OCCN)
Track 1 : Sudden Shnt Det Used = No (OCCN)
Track 1 : Low EZ Detection Used = No (OCCN)

GCP: track 1 MS Control
Track 1 : MS/GCP CtrlIP Used = No (OCCN)
Track 1 : MS Sensitivity Level = 0 (Field)
Track 1 : Compensation Level = 1300 (Field,TCN)
Track 1 : Warn Time-Ballast Comp = High (Field,TCN)
Track 1 : Low EX Adjustment = 39 (Field)
Track 1 : Bidirn Dax Passthru = No (OCCN)
Track 1 : False Act on Train Stop = No (Field)
Track 1 : EX Limiting Used = Yes (Field)
Track 1 : EZ Correction Used = Yes (Field)

ISLAND: track 1
Track 1 : IslFrequency = 7.1 kHz (Field)
Track 1 : Pickup Delay (2s +) = 0 sec (OCCN)
Track 1 : IslEnable IP Used = No (OCCN)

AND: track Anding
AND 1 XR Used = Yes (OCCN)
AND 2 Used = Yes (OCCN)
AND 3 Used = No (OCCN)
AND 4 Used = No (OCCN)
AND 5 Used = No (OCCN)
AND 6 Used = No (OCCN)
AND 7 Used = No (OCCN)
AND 8 Used = No (OCCN)

AND: AND 1 XR
AND 1 XR Track 1 = Prime (OCCN)
AND 1 Enable Used = Yes (OCCN)
And 1 Enable Pickup = 0 sec (OCCN)
AND 1 Enable Drop = 0 sec (OCCN)
AND 1 Wrap Used = No (OCCN)

AND: AND 2
AND 2 Track 1 = Not Used (OCCN)
AND 2 Enable Used = Yes (OCCN)
AND 2 Enable Pickup = 0 sec (OCCN)
AND 2 Enable Drop = 0 sec (OCCN)
AND 2 Wrap Used = No (OCCN)

ADVANCED: MS restart
MS/GCP Restart Used = No (OCCN)

ADVANCED: out of service
OOS Control = OOS IPs (OCCN)

ADVANCED: out of service 2
T1 OOS Control = OOS Input 1 (OCCN)
T1 OOS Controls = GCP and Island (OCCN)

ADVANCED: track wrap circuits
Wrap LOS Timer = 5 sec (OCCN)
Track 1 Wrap Used = No (OCCN)

ADVANCED: trk 1 overrides
Track 1 : AllPredictors Override Used = No (OCCN)

ADVANCED: OR logic
OR 1 Used = No (OCCN)
OR 2 Used = No (OCCN)
OR 3 Used = No (OCCN)
OR 4 Used = No (OCCN)

ADVANCED: InternalI/O 1
Pass Thrus = No (OCCN)
Int.1 Sets = Not Used (OCCN)
Int.1 Set by = Not Used (OCCN)
Int.2 Sets = Not Used (OCCN)
Int.2 Set by = Not Used (OCCN)
Int.3 Sets = Not Used (OCCN)
Int.3 Set by = Not Used (OCCN)
Int.4 Sets = Not Used (OCCN)
Int.4 Set by = Not Used (OCCN)

ADVANCED: InternalI/O 2
Int.5 Sets = Not Used (OCCN)
Int.5 Set by = Not Used (OCCN)
Int.6 Sets = Not Used (OCCN)
Int.6 Set by = Not Used (OCCN)
Int.7 Sets = Not Used (OCCN)
Int.7 Set by = Not Used (OCCN)
Int.8 Sets = Not Used (OCCN)
Int.8 Set by = Not Used (OCCN)

ADVANCED: InternalI/O 3
Int.9 Sets = Not Used (OCCN)
Int.9 Set by = Not Used (OCCN)
Int.10 Sets = Not Used (OCCN)
Int.10 Set by = Not Used (OCCN)
Int.11 Sets = Not Used (OCCN)
Int.11 Set by = Not Used (OCCN)
Int.12 Sets = Not Used (OCCN)
Int.12 Set by = Not Used (OCCN)

ADVANCED: InternalI/O 4
Int.13 Sets = Not Used (OCCN)
Int.13 Set by = Not Used (OCCN)
Int.14 Sets = Not Used (OCCN)
Int.14 Set by = Not Used (OCCN)
Int.15 Sets = Not Used (OCCN)
Int.15 Set by = Not Used (OCCN)
Int.16 Sets = Not Used (OCCN)
Int.16 Set by = Not Used (OCCN)

ADVANCED: site options
Daylight Savings = On (Field)
Units = Standard (OCCN)
Maint CallRpt IP Used = No (OCCN)
Emergency Activate IP = No (OCCN)
EZ/EX Logging = Change (Field)
EZ/EX Point Change = 3 (Field)

SSCC
Gates Used = Yes (OCCN)
SSCCI+2 GPs Coupled = Yes (OCCN)
Min Activation = 20 sec (OCCN)
Rmt Activation Cancel = 3 min (OCCN)
BellOn Gate Rising = No (OCCN)
Mute BellOn Gate Down = No (OCCN)
SSCCIV Controller Used = No (OCCN)

SSCC: 1
SSCC-1 Activation = AND 1 XR (OCCN)
SSCC-1 Gate Delay = 4 sec (OCCN)
SSCC-1 Number of GPs = 1 (OCCN)
SSCC-1 Number of GDs = 0 (OCCN)
SSCC 1 : Flash Rate = 60 (OCCN)
SSCC 1 : Low Battery Detection = No (Field)
SSCC 1 : Flash Sync = master (OCCN)
SSCC 1 : Invert Gate Output = No (OCCN)
SSCC 1 : Lamp NeutralTest = Off (Field)
Aux-1 Xng CtrlUsed = No (OCCN)

SSCC: 2
SSCC-2 Activation = AND 1 XR (OCCN)
SSCC-2 Gate Delay = 4 sec (OCCN)
SSCC-2 Number of GPs = 0 (OCCN)
SSCC-2 Number of GDs = 0 (OCCN)
SSCC 2 : Flash Rate = 60 (OCCN)
SSCC 2 : Low Battery Detection = No (Field)
SSCC 2 : Flash Sync = slave (OCCN)
SSCC 2 : Invert Gate Output = No (OCCN)
SSCC 2 : Lamp NeutralTest = Off (Field)
Aux-2 Xng CtrlUsed = No (OCCN)

OUTPUT: assignment page 1
OUT 1.1 = AND 1 XR (OCCN)
OUT 1.2 = AND 2 (OCCN)

INPUT: assignment page 1
IN 1.1 = Not Used (OCCN)
IN 1.2 = Not Used (OCCN)

IO: assignment SSCC
OUT GC 1 = Gate Output 1 (OCCN)
OUT GC 2 = Gate Output 2 (OCCN)
IN 7.1 = AND 1 XR Enable (OCCN)
IN 7.2 = Not Used (OCCN)
IN 7.3 = Not Used (OCCN)
IN 7.4 = AND 2 Enable (OCCN)
IN 7.5 = GP 1.1 (OCCN)
IN 8.1 = Out Of Service IP 1 (OCCN)
IN 8.2 = Not Used (OCCN)
IN 8.3 = Not Used (OCCN)
IN 8.4 = AND 2 Enable (OCCN)
IN 8.5 = Not Used (OCCN)

SEAR
SEAR Subnode = 99 (OCCN)
DI 1 = General1 (OCCN)
DI 2 = Gnd Flt Tester 1 (OCCN)
Rly 1 = Ground Fault Test (OCCN)
Rly 2 = AC Control(OCCN)

SEAR: Inputs
SP 2.1 = POK 1 (OCCN)
SP 3.1 = Not Used (OCCN)
SP 4.1 = Not Used (OCCN)
SP 5.1 = Not Used (OCCN)
SP 6.1 = Not Used (OCCN)

SEAR: slot 1-4 Inputs
IN 1.1 = Not Used (OCCN)
IN 1.2 = Not Used (OCCN)
IN 2.1 = Not Used (OCCN)
IN 2.2 = POK 2 (OCCN)
IN 3.1 = Not Used (OCCN)
IN 3.2 = Not Used (OCCN)
IN 4.1 = Not Used (OCCN)
IN 4.2 = Not Used (OCCN)

SEAR: Inputs slot 5
IN 5.1 = Not Used (OCCN)
IN 5.2 = Not Used (OCCN)

SEAR: Inputs slot 6
IN 6.1 = Not Used (OCCN)
IN 6.2 = Not Used (OCCN)

SEAR: slot 7-8 Inputs
IN 7.2 = Not Used (OCCN)
IN 7.3 = TSS 1 (OCCN)
IN 8.2 = Not Used (OCCN)
IN 8.3 = TSS 2 (OCCN)
IN 8.5 = General2 (OCCN)

SITE: programming
Radio Subnode = 1 (Field)
Field Password = Off (OCCN)
Low Battery Enabled = Off (Field)

Configuration Package File

Filename: eff-160.65.pac
Date/Time: 3/06/2012 12:53:05

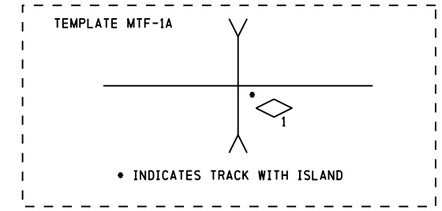

NOTES
1) DISTANCE(S) TO BE VERIFIED AT INSTALLATION
INDICATE SELECTED PROGRAMMED VALUE IF DIFFERENT THAN SHOWN
REFER TO 4000 GCP INSTRUCTION/INSTALLATION MANUAL
FOR PROGRAMMING PARAMETERS

2) PROGRAM TEXT HIGHLIGHTED IN RED INDICATES 4000 PROGRAM
MODIFICATIONS TO DEFAULT PROGRAM VALUES

3) EACH CONSTANT WARNING DEVICE SYSTEM TO BE PROGRAMMED TO
CONVERT TO A MOTION SENSOR 300 FEET FROM EDGE OF ROAD
TRAVELLED WAY
SHUNT TRACK 300 FEET FROM EDGE OF ROAD TRAVELLED WAY
AND NOTE "EZ" VALUE
PROGRAM EACH SYSTEM WITH THE INDICATED "EZ" VALUE +2

4) VERIFY SET TIMER VALUE TO MATCH ACTUAL TRAIN MOVEMENT
WITHIN THE CROSSING APPROACH CIRCUITS

IRC 20 DEC 2011

PROPOSED
DESIGN NO. 11-0550
RED-IN YELLOW-OUT

AS INSTALLED
DATE _____
BY _____
(PRINT NAME)

SUBMIT CFG FILES

PROPOSED			REVISIONS	D	C	COMPLETED			C
D	M	Y				D	M	Y	

REGION SOUTHERN
SUB. EFFINGHAM 361

SIGNALS AND COMMUNICATIONS HOMEWOOD | DES. SIA
20 DECEMBER 2011 | CH. BJW

GCP 4000
PROGRAM INFORMATION
LIS, IL
500E

EFF-160.65-03

DOT# 292 627R

eff-160.65-03.dgn
11-JUN-2012

INVENSYS RAIL CORPORATION			
DES. : SIA	DATE: 21/12/11	JOB NO. : PICA10343	
CKD. : BJW	ISSUE DATE: N/A	EST. NO. : XP-6173	
DRN. : SIA	PLAN NO. : N/A	SHEET 3 OF 15	
P TIME: 08:42	P DATE: $$PLOT_DATE	CAD ID. : EFF-160.65-03	

INVENSYS RAIL CORP.
LOUISVILLE DIVISION, LOUISVILLE, KY

CHECKING

REVISIONS				
NO.	DATE	BY	DESCRIPTION	APP. BY
1				
2				
3				
4				
5				

TO CONFIGURE SEARII & SEARIII PRESS SITE SETUP KEY. USE ARROW KEYS TO MAKE SELECTION, PRESS ENTER AFTER SELECTION HAS BEEN MADE.

STAGE 1

PROGRAM MENU QUESTIONS	PROGRAM	OPTIONS/RANGE
DATE/TIME?	CURRENT DATE/TIME	CURRENT DATE/TIME
AUTOMATIC DST ADJUSTMENT?	YES	YES, NO
TIME ZONE?	CENTRAL	EASTERN, CENTRAL, MOUNTAIN, PACIFIC, ALASKA, HAWAII, ATLANTIC, SASKATCHEWAN, NEW FOUNLAND
SITE NAME?	500E CIPS ROAD	STREET NAME
MILE POST?	160.65	MILEAGE
DOT/CROSSING IS #?	292627R	
TESTER TYPE?	CROSSING	CROSSING, WAYSIDE
DATE FORMAT?	mm-dd-yyyy	mm-dd-yyyy, dd-mm-yyyy
TEMPERATURE FORMAT?	FAHRENHEIT	FAHRENHEIT, CELSIUS
SITE TYPE?	NO COM	NO COM, BULLHORN, DIALUP, NODE, COLLECTOR
SITE ATCS ADDRESS?		7.RRR.LLL.GGG.99.01
OFFICE ATCS ADDRESS?		2.RRR.NN.DDDD
(FOR NODE USE) PRIMARY HOP ADDR?		7.RRR.LLL.GGG.00.01
(FOR NODE USE) BACKUP HOP ADDR1?		7.RRR.LLL.GGG.00.01
(FOR NODE USE) BACKUP HOP ADDR2?		7.RRR.LLL.GGG.00.01
(FOR COLLECTOR USE) POLL ID?		1-99
(FOR COLLECTOR USE) MODE?		GEN/ATCS, GENISYS
(FOR COLLECTOR USE) WAMS/XID?		ENABLED, DISABLE
(FOR COLLECTOR USE) OFFICE COMM. DEVICE?		DIRECT (RS232) MCM (RS232) MCM (ECHELON) SREAD SPEC (ECHELON) DIAL MODEM (RS232) S200 RADIO (RS422)
(FOR COLLECTOR USE) OFFICE PHONE NUMBER?		PHONE NUMBER OF WAMS
(FOR COLLECTOR USE) INIT STRING?		OPTIONAL HAYES MODEM INITIALIZATION STRING
FIELD COMM. DEVICE?		VHF COMM. (ECHELON) VHF COMM. (RS232) SPREAD SPEC (ECHELON) SPREAD SPEC (RS232)
USER PORT?	57600, 8, N, 1, N	BAUD, DATA BITS, PARITY, STOP BITS, FLOW CONTROL
AUX PORT?	9600, 8, N, 1, N	BAUD, DATA BITS, PARITY, STOP BITS, FLOW CONTROL

YOU WILL NOW SEE A MESSAGE "PLEASE WAIT COMPILING STAGE 1"
CONTINUE TO NEXT PROGRAM MENU QUESTIONS.

STAGE 2

QUESTION	PROGRAM	SELECTION 1 (MINIMUM)	SELECTION 2 (MAXIMUM)	CONDITION FOR MENU DISPLAY
RESET NAMES / MODULES ?	NO	YES	NO	ALWAYS
RAILROAD NUMBER ?	360 (IC)	1	999	ALWAYS
CROSSING CONFIGURATION	NORMAL	NORMAL	SPLIT GATE (NOTE 2)	ALWAYS
ENTRANCE GATES ?	2	0	8	ALWAYS
GATE POSTION FAIL TIME (SECONDS) ?	11	10	60	GATES > 0
BATTERY BANKS ?	2	1	3	ALWAYS
BATT MON USED ?	NO	NO	YES	ALWAYS
INTERNAL CROSSING CONTROLLERS ?	2	0	2	ALWAYS
EXTERNAL CROSSING CONTROLLERS ?	0	0	2	CROSSING CONTROLLER = YES
VHF COMMUNICATOR ?	YES	YES	NO	ALWAYS
DTMF ACTIVATION?	YES	NO	YES	RAILROAD = 360 (IC)
ACTIVATION CODE ?	627	1	999	VHF COMMUNICATOR = YES
ACTIVATION TIMEOUT ?	180	1	600	VHF COMMUNICATOR = YES
ILOD MODULES ?	2	0	4	ALWAYS
ANY LED BULBS USED ?	YES	NO	YES	ILOD MODULES > 0
AUTO INSPECTION ?	NO	YES	NO	ALWAYS
BELL SENSORS ?	1	0	8	ALWAYS
BELL SENSORS TSS1 ?	NO	NO	YES	BELL SENSORS > 0
BELL SENSORS TSS2 ?	YES	NO	YES	BELL SENSORS > 0
BELL SENSORS TSS3 ?	NO	NO	YES	BELL SENSORS > 0
BELL SENSORS TSS4 ?	NO	NO	YES	BELL SENSORS > 0
BELL SENSORS TSS5 ?	NO	NO	YES	BELL SENSORS > 0
BELL SENSORS TSS6 ?	NO	NO	YES	BELL SENSORS > 0
BELL SENSORS TSS7 ?	NO	NO	YES	BELL SENSORS > 0
BELL SENSORS TSS8 ?	NO	NO	YES	BELL SENSORS > 0
BELL ON ?	GATES LOWERING	GATES LOWERING	GATES MOVING	BELL SENSORS > 0
GFT'S ?	YES	YES	NO	ALWAYS
BATTERIES ON GFT1 ?	2	1	2	GFT'S = YES
GATE TIP SENSORS ?	NO	YES	NO	GATES > 0
RTU ?	NO	NO	YES	ALWAYS
VHF VOICE CHANNEL ?	1 (NOTE 1)	1	8	VHF COMMUNICATOR = YES
VHF DATA CHANNEL ?	1 (NOTE 1)	1	8	VHF COMMUNICATOR = YES
USE CELL MODEM NON-CRITICAL FEATURE ?	NO	NO	YES	ALWAYS
FULL APPROACH MOVE ALARMS ?	ACTIVATE	ACTIVATE	DO NOT ACTIVATE	ALWAYS

YOU WILL NOW SEE A MESSAGE "PLEASE WAIT COMPILING STAGE 2"
CONTINUE TO NEXT PROGRAM MENU QUESTIONS.

STAGE 3

PROGRAM MENU QUESTIONS	PROGRAM
EDIT DIGITAL INPUTS	NO
EDIT BATTERIES	NO
EDIT RELAYS	NO
EDIT TEST LEDS	NO
EDIT ILOD SENSORS	NO
EDIT VHF SETTINGS	NO
GCP4K ATCS SUBNODE?	16

SAVE CONFIGURATION

NOTES

1) INDICATE SELECTION IN SPACE PROVIDED
2) ADDITIONAL OPTIONS: DUAL CROSSING, EXTERNAL ENTRANCE GATE CONTROLLERS

IRC 20 DEC 2011

PROPOSED
DESIGN NO. 11-0550
RED-IN YELLOW-OUT

AS INSTALLED
DATE _____
BY _____
(PRINT NAME)

SEARIII EXECUTIVE 9V725 REV. A01U, SEARIII APPLICATION 9V864 REV. A01J

PROPOSED D	M	Y	REVISIONS	D	C	COMPLETED D	M	Y	C

REGION SOUTHERN
SUB. EFFINGHAM 361

SIGNALS AND COMMUNICATIONS HOMEWOOD
20 DECEMBER 2011
DES. SIA
CH. BJW

GCP 4000/SEAR III
SETUP & PROGRAM
LIS. IL
500E

EFF-160.65-04

DOT# 292 627R

INVENSYS RAIL CORPORATION

DES.: SIA	DATE: 21/12/11	JOB NO.: PICA10343	
CKD.: BJW	ISSUE DATE: N/A	EST. NO.: XP-6173	
DRN.: SIA	PLAN NO.: N/A	SHEET 4 OF 15	
P. TIME: 08:42	P. DATE: $$PLOT_DATE	CAD ID.: EFF-160.65-04	

INVENSYS RAIL CORP.
LOUISVILLE DIVISION, LOUISVILLE, KY

eff-160.65-04.dgn
11-JUN-2012

CHECKING

REVISIONS			
NO.	DATE	BY	DESCRIPTION	APP. BY
1				
2				
3				
4				
5				

GCP 4000
CALIBRATION HISTORY

INITIAL SET UP BY: _____ DATE: _____

		APPROACH DISTANCE CALIBRATION										LINEARIZATION CALIBRATION	
		EZ/EX VALUES (TRACK UNOCCUPIED)				HARD WIRE SHUNT AT TERMINATION SHUNT				COMPUTED APPROACH DISTANCE		LINEARIZATION STEP VALUE	
		EZ		EX		EZ		EX					
		NRML	STBY	NRML	STBY	NRML	STBY	NRML	STBY	NRML	STBY	NRML	STBY
EAST	TRACK 1		N/A		N/A		N/A		N/A		N/A		N/A
WEST	TRACK 1		N/A		N/A		N/A		N/A		N/A		N/A

GCP 4000
CALIBRATION HISTORY

INITIAL SET UP BY: _____ DATE: _____

		APPROACH DISTANCE CALIBRATION										LINEARIZATION CALIBRATION	
		EZ/EX VALUES (TRACK UNOCCUPIED)				HARD WIRE SHUNT AT TERMINATION SHUNT				COMPUTED APPROACH DISTANCE		LINEARIZATION STEP VALUE	
		EZ		EX		EZ		EX					
		NRML	STBY	NRML	STBY	NRML	STBY	NRML	STBY	NRML	STBY	NRML	STBY
EAST	TRACK 1		N/A		N/A		N/A		N/A		N/A		N/A
WEST	TRACK 1		N/A		N/A		N/A		N/A		N/A		N/A

GCP 4000
CALIBRATION HISTORY

INITIAL SET UP BY: _____ DATE: _____

		APPROACH DISTANCE CALIBRATION										LINEARIZATION CALIBRATION	
		EZ/EX VALUES (TRACK UNOCCUPIED)				HARD WIRE SHUNT AT TERMINATION SHUNT				COMPUTED APPROACH DISTANCE		LINEARIZATION STEP VALUE	
		EZ		EX		EZ		EX					
		NRML	STBY	NRML	STBY	NRML	STBY	NRML	STBY	NRML	STBY	NRML	STBY
EAST	TRACK 1		N/A		N/A		N/A		N/A		N/A		N/A
WEST	TRACK 1		N/A		N/A		N/A		N/A		N/A		N/A

IRC 20 DEC 2011

PROPOSED
DESIGN NO. 11-0550
RED-IN YELLOW-OUT

AS INSTALLED
DATE _____
BY _____
(PRINT NAME)

PROPOSED D	M	Y	REVISIONS	D	C	COMPLETED D	M	Y	C

REGION SOUTHERN
SUB. EFFINGHAM 361

SIGNALS AND COMMUNICATIONS HOMEWOOD
DES. SIA
20 DECEMBER 2011
CH. BJW

GCP 4000
CALIBRATION HISTORY
LIS. IL
500E

EFF-160.65-05

DOT# 292 627R

INVENSYS RAIL CORPORATION

DES.: SIA	DATE: 21/12/11	JOB NO.: PICA10343
CKD.: BJW	ISSUE DATE: N/A	EST. NO.: XP-6173
DRN.: SIA	PLAN NO.: N/A	SHEET 5 OF 15
P TIME: 08:42	P DATE: $$PLOT_DATE	CAD ID.: EFF-160.65-05

INVENSYS RAIL CORP.
LOUISVILLE DIVISION, LOUISVILLE, KY

eff-160.65-05.dgn
11-JUN-2012

CHECKING

REVISIONS				
NO.	DATE	BY	DESCRIPTION	APP. BY
1				
2				
3				
4				
5				

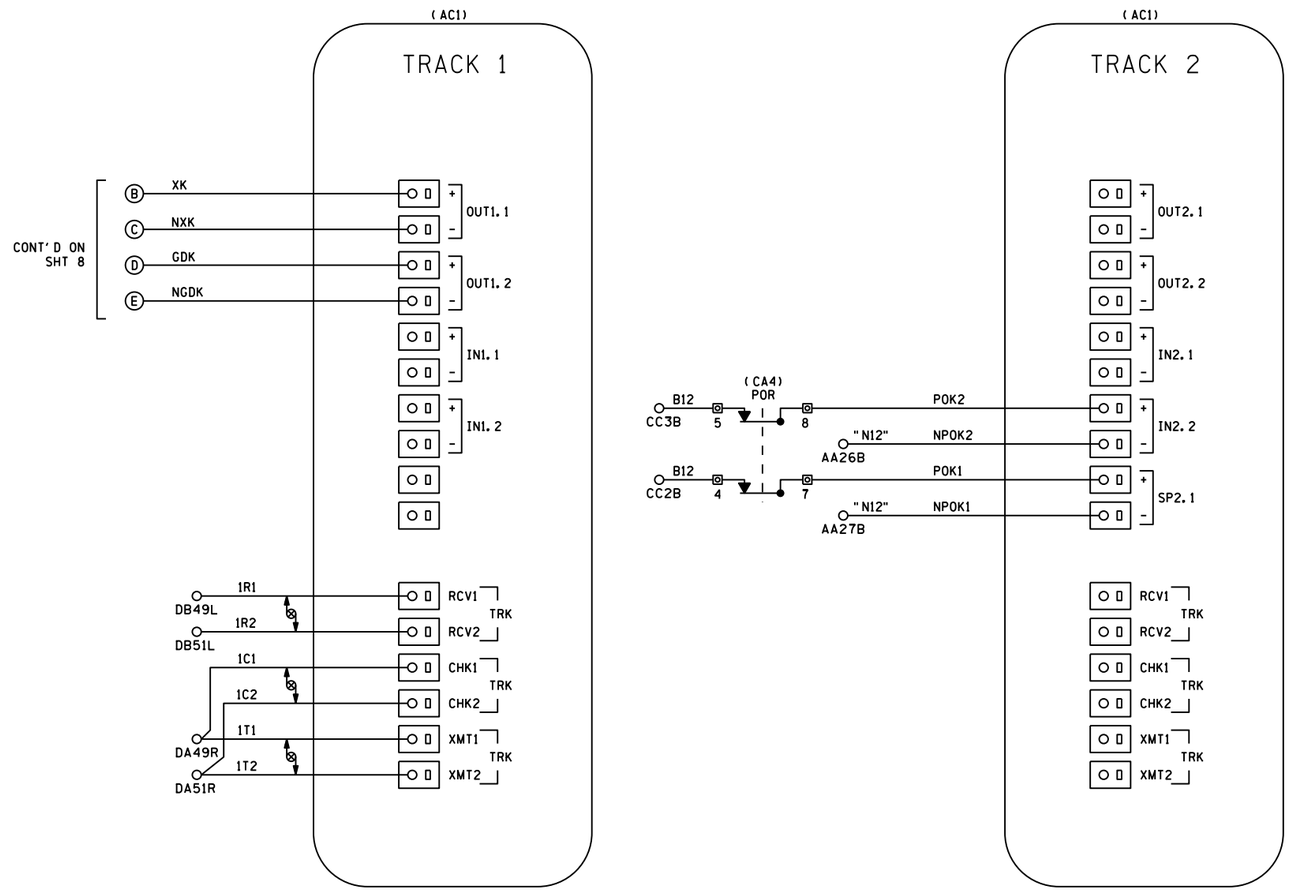

NOTES

1) ALL WIRING #16 AWG UNLESS OTHERWISE NOTED

DENOTES TWISTED PAIR

" " DENOTES REFERENCE, NOT WIRE TAG

IRC 20 DEC 2011

PROPOSED
DESIGN NO. 11-0550
RED-IN YELLOW-OUT

AS INSTALLED
DATE _____
BY _____
(PRINT NAME)

PROPOSED			REVISIONS	D	C	COMPLETED			C
D	M	Y				D	M	Y	

REGION SOUTHERN
SUB. EFFINGHAM 361

SIGNALS AND COMMUNICATIONS HOMEWOOD
20 DECEMBER 2011
DES. SIA
CH. BJW

GCP 4000
TRACK 1 & 2 MODULE CONNECTIONS
LIS. IL
500E

EFF-160.65-06

DOT# 292 627R

INVENSYS RAIL CORPORATION

DES.: SIA	DATE: 21/12/11	JOB NO.: PICA10343
CKD.: BJW	ISSUE DATE: N/A	EST. NO.: XP-6173
DRN.: SIA	PLAN NO.: N/A	SHEET 6 OF 15
P TIME: 08:42	P DATE: $$PLOT_DATE	CAD ID.: EFF-160.65-06

INVENSYS RAIL CORP.
LOUISVILLE DIVISION, LOUISVILLE, KY

eff-160.65-06.dgn
11-JUN-2012

CHECKING

REVISIONS				
NO.	DATE	BY	DESCRIPTION	APP. BY
1				
2				
3				
4				
5				

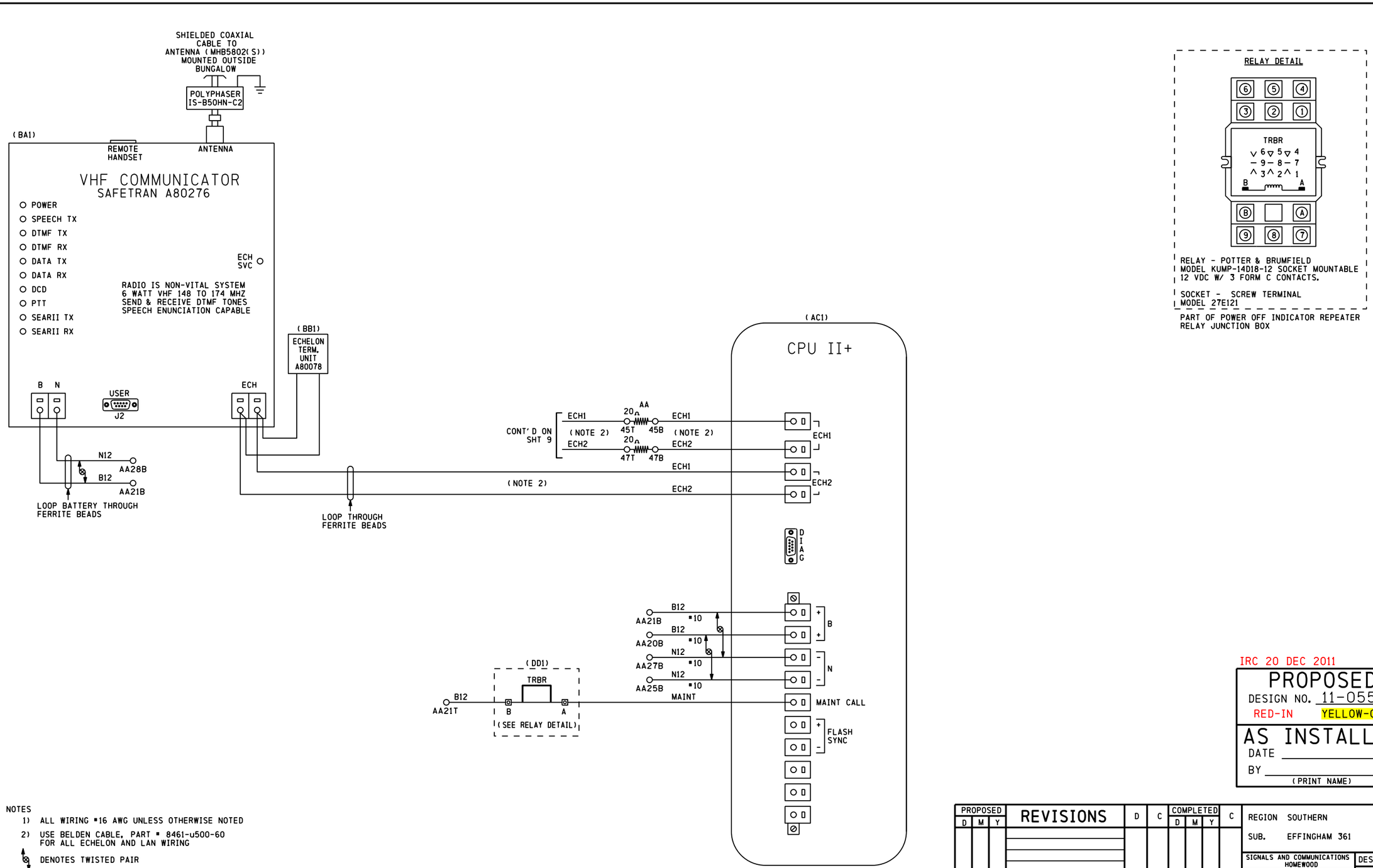

NOTES

1) ALL WIRING #16 AWG UNLESS OTHERWISE NOTED
2) USE BELDEN CABLE, PART # 8461-u500-60 FOR ALL ECHELON AND LAN WIRING

⊗ DENOTES TWISTED PAIR

IRC 20 DEC 2011

PROPOSED
DESIGN NO. 11-0550
RED-IN YELLOW-OUT

AS INSTALLED
DATE _____
BY _____
(PRINT NAME)

PROPOSED			REVISIONS	D	C	COMPLETED			C
D	M	Y				D	M	Y	

REGION SOUTHERN
SUB. EFFINGHAM 361

SIGNALS AND COMMUNICATIONS HOMEWOOD
DES. SIA
20 DECEMBER 2011
CH. BJW

GCP 4000
CPUII+ & VHF COMMUNICATOR
LIS. IL
500E

EFF-160.65-07

DOT# 292 627R

INVENSYS RAIL CORPORATION

DES.: SIA	DATE: 21/12/11	JOB NO.: PICA10343	
CKD.: BJW	ISSUE DATE: N/A	EST. NO.: XP-6173	
DRN.: SIA	PLAN NO.: N/A	SHEET 7 OF 15	
P TIME: 08:42	P DATE: $$PLOT_DATE	CAD ID.: EFF-160.65-07	

INVENSYS RAIL CORP.
LOUISVILLE DIVISION, LOUISVILLE, KY

eff-160.65-07.dgn
11-JUN-2012

CHECKING

eff-160.65-08.dgn
11-JUN-2012

REVISIONS				
NO.	DATE	BY	DESCRIPTION	APP. BY
1				
2				
3				
4				
5				

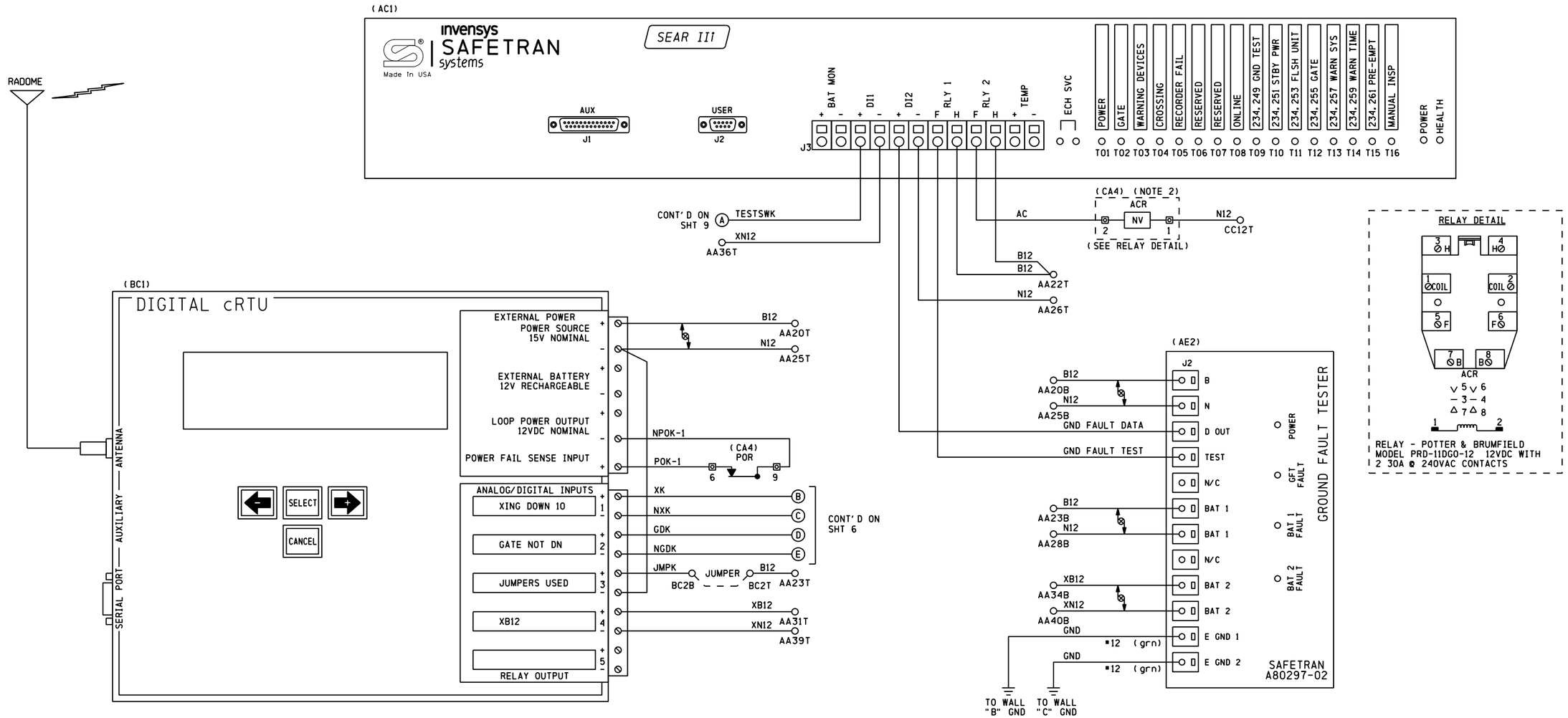

CONFIGKEY:	30
MODEL:	CO6C/2ANA V2.3
SERIAL #:	
SITE IDENTIFIER:	DOT# 292 627R

• FIELD TO PROVIDE SERIAL #

	LOW ALARM	RETURN	HIGH ALARM	RETURN
B12	11.6	12.6	15.6	14.6
XB12	13.8	14.8	17.8	16.8

NOTES
1) ALL WIRING #16 AWG UNLESS OTHERWISE NOTED
2) PART OF SEARIII POWER CONTROL AND INDICATION RELAY JUNCTION BOX

DENOTES TWISTED PAIR

IRC 20 DEC 2011

PROPOSED
DESIGN NO. 11-0550
RED-IN

AS INSTALLED
DATE
BY
(PRINT NAME)

PROPOSED D	M	Y	REVISIONS	D	C	COMPLETED D	M	Y	C

REGION SOUTHERN
SUB. EFFINGHAM 361

SIGNALS AND COMMUNICATIONS HOMEWOOD
20 DECEMBER 2011
DES. SIA
CH. BJW

GCP 4000
SEAR III WITH GFT & CRTU
LIS, IL
500E

EFF-160.65-08

DOT# 292 627R

INVENSYS RAIL CORPORATION

DES.: SIA	DATE: 21/12/11	JOB NO.: PICA10343	
CKD.: BJW	ISSUE DATE: N/A	EST. NO.: XP-6173	
DRN.: SIA	PLAN NO.: N/A	SHEET 8 OF 15	
P TIME: 08:42	P DATE: $$PLOT_DATE	CAD ID.: EFF-160.65-08	

INVENSYS RAIL CORP.
LOUISVILLE DIVISION, LOUISVILLE, KY

CHECKING

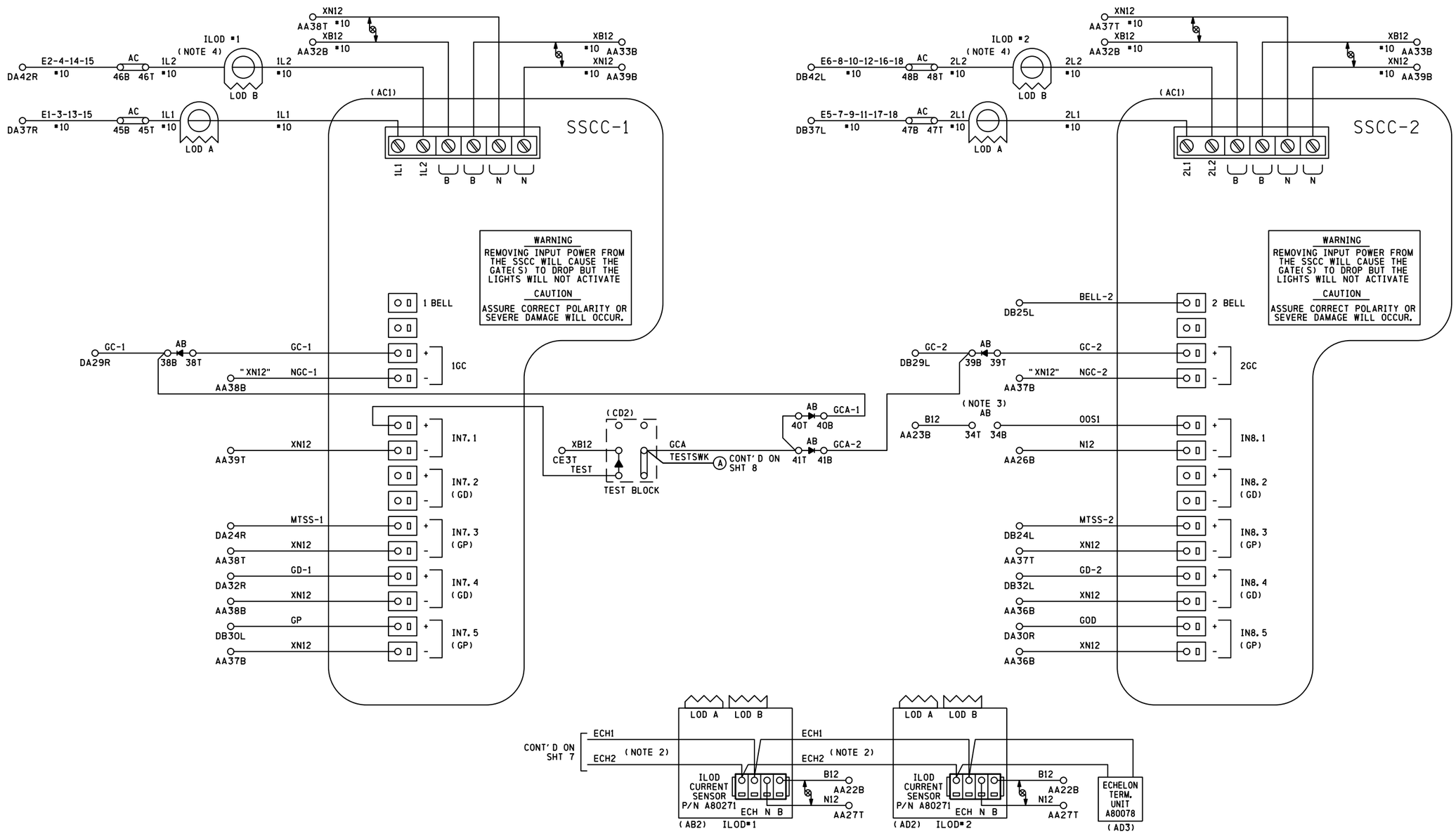

NOTES

1) ALL WIRING TO BE #16 AWG UNLESS OTHERWISE NOTED
2) USE BELDEN CABLE, PART # 8461-u500-60 FOR ALL ECHELON AND LAN WIRING
3) TO TAKE TRACK 1 (T1) OUT OF SERVICE, JUMPER AB34T TO AB34B
4) LOOP WIRE THROUGH LOD TWO (2) TIMES

DENOTES RECTIFIER, SAFETRAN PART # 8002A299006

DENOTES TWISTED PAIR

" " DENOTES REFERENCE, NOT WIRE TAG

IRC 20 DEC 2011

PROPOSED
DESIGN NO. 11-0550
RED-IN YELLOW-OUT

AS INSTALLED
DATE _____
BY _____
(PRINT NAME)

PROPOSED D	M	Y	REVISIONS	D	C	COMPLETED D	M	Y	C

REGION SOUTHERN
SUB. EFFINGHAM 361

SIGNALS AND COMMUNICATIONS HOMEWOOD — DES. SIA
20 DECEMBER 2011 — CH. BJW

GCP 4000/SSCCIIII
GATE CONTROLLERS W/ ILODS
LIS. IL
500E

EFF-160.65-09

DOT# 292 627R

REVISIONS

NO.	DATE	BY	DESCRIPTION	APP. BY
1				
2				
3				
4				
5				

INVENSYS RAIL CORPORATION

DES.: SIA	DATE: 21/12/11	JOB NO.: PICA10343	
CKD.: BJW	ISSUE DATE: N/A	EST. NO.: XP-6173	
DRN.: SIA	PLAN NO.: N/A	SHEET 9 OF 15	
P TIME: 08:42	P DATE: $$PLOT_DATE	CAD ID.: EFF-160.65-09	

INVENSYS RAIL CORP.
LOUISVILLE DIVISION, LOUISVILLE, KY

eff-160.65-09.dgn
11-JUN-2012

CHECKING

REVISIONS				
NO.	DATE	BY	DESCRIPTION	APP. BY
1				
2				
3				
4				
5				

CONTACT	CLOSED AT	FUNCTION
6	70° -90°	POWER DOWN CONTROL
7	0° -89°	POWER UP CONTROL
8	83° -90°	FLASHING LGT. CONTROL
9	5° -90°	BELL CONTROL
10	0° -5°	GATE DOWN INDICATION
11	N/A	SPARE
12	N/A	SPARE

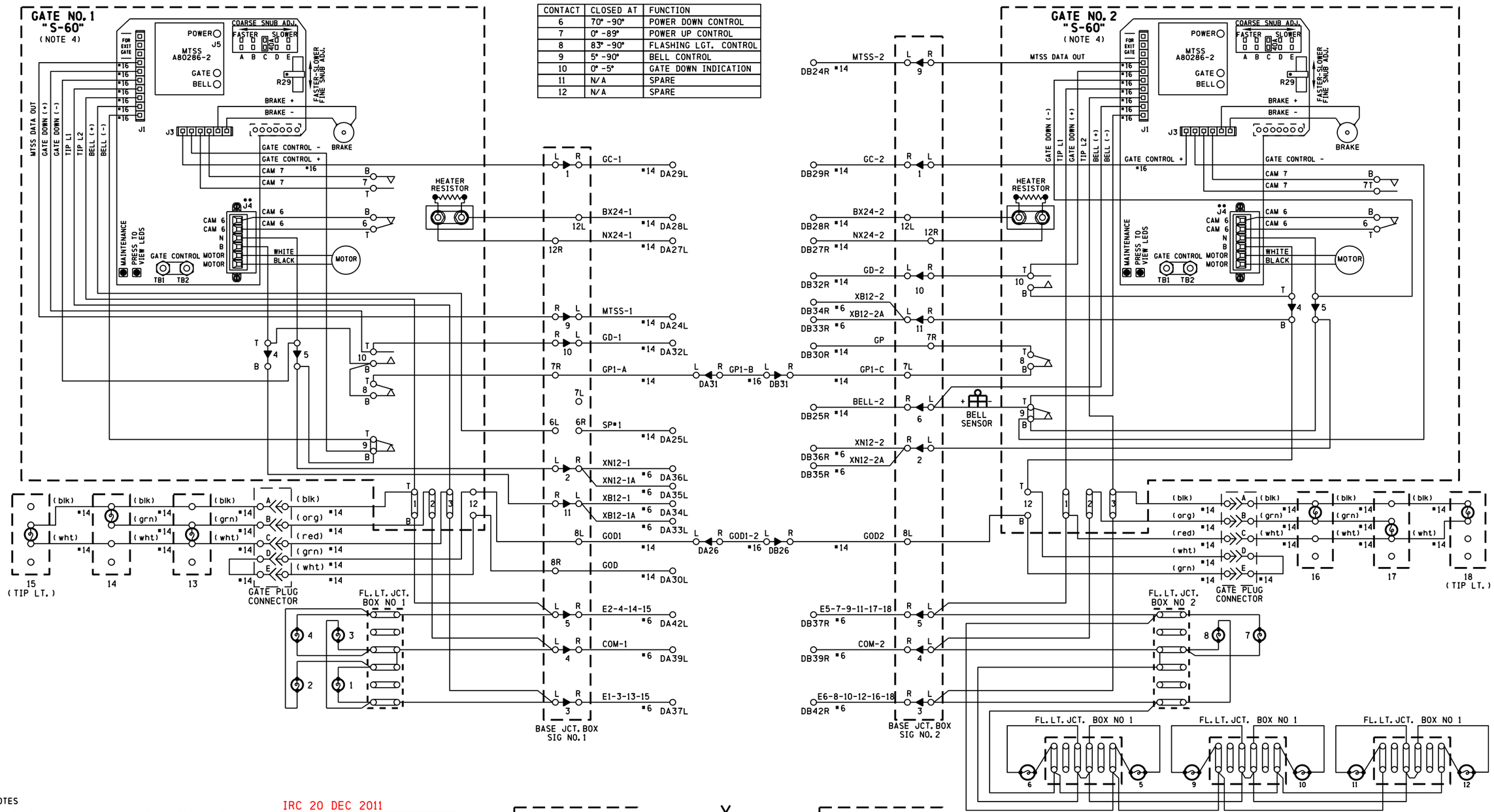

NOTES

1) ON GATE No. 1 ADD JUMPER BETWEEN TERMINALS:
ADD JUMPER BETWEEN TERMINAL 4T & 10B,
ADD JUMPER BETWEEN TERMINAL 8B & 10B,
AND ADD JUMPER BETWEEN TERMINAL 5B & 9B

2) ON GATE No. 2 ADD JUMPER BETWEEN TERMINALS:
ADD JUMPER BETWEEN TERMINAL 4T & 10B,
ADD JUMPER BETWEEN TERMINAL 5B & 9B,
AND ADD JUMPER BETWEEN TERMINAL 4B & 12T

3) ALL WIRING #10 AWG UNLESS OTHERWISE NOTED

4) GATE DESCENT TIME (RELEASE FROM VERTICAL TO FULLY HORIZONTAL) TO BE WITHIN 11 SECONDS

5) BELL CUT-OUT (5°-90°) WHEN REQUIRED
REMOVE STRAP BETWEEN 9B AND 9T

6) ENSURE ALL TERMINALS HAVE TWO SHOULDER NUTS

IRC 20 DEC 2011

PROPOSED
DESIGN NO. 11-0550
RED-IN YELLOW-OUT

AS INSTALLED
DATE _____
BY _____
(PRINT NAME)

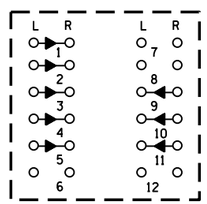

TERMINAL NUMBERING
BASE JCT. BOX 1

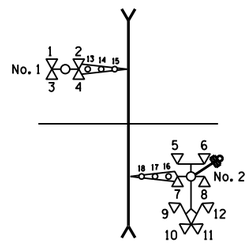

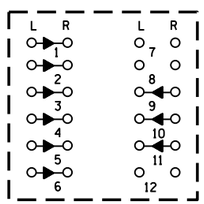

TERMINAL NUMBERING
BASE JCT. BOX 2

PROPOSED			REVISIONS	D	C	COMPLETED			C
D	M	Y				D	M	Y	

REGION SOUTHERN
SUB. EFFINGHAM 361

SIGNALS AND COMMUNICATIONS HOMEWOOD — DES. SIA
20 DECEMBER 2011 — CH. BJW

GATE 1&2 MECH. CONTROL CIRCUITS
SAFETRAN S-60
LIS, IL
500E

EFF-160.65-10

DOT# 292 627R

INVENSYS RAIL CORPORATION

DES.: SIA	DATE: 2/12/11	JOB NO.: PICA10343	
CKD.: BJW	ISSUE DATE: N/A	EST. NO.: XP-6173	
DRN.: SIA	PLAN NO.: N/A	SHEET 10 OF 15	
P TIME: 08:42	P DATE: $$PLOT_DATE	CAD ID.: EFF-160.65-10	

INVENSYS RAIL CORP.
LOUISVILLE DIVISION, LOUISVILLE, KY

CHECKING

eff-160.65-11.dgn
11-JUN-2012

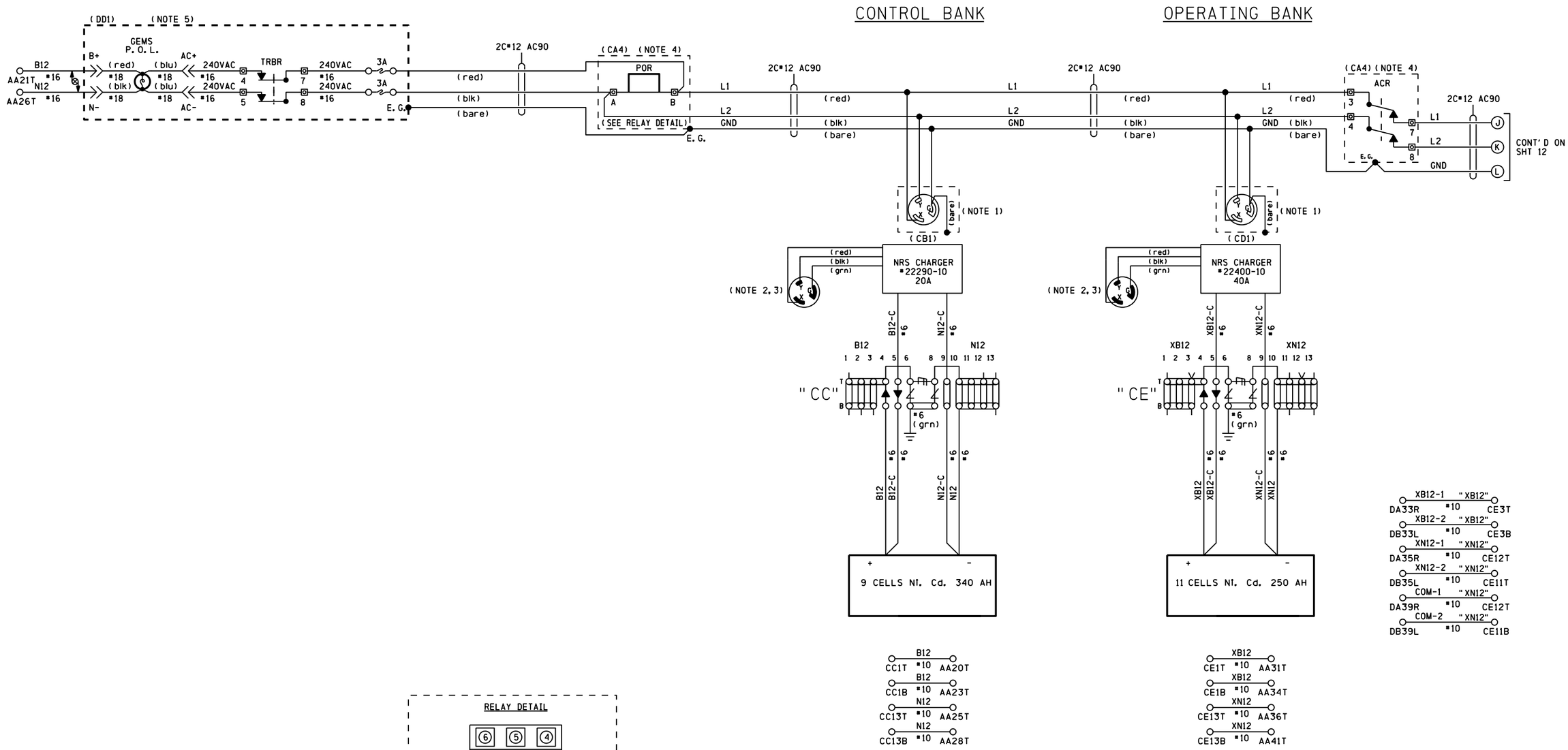

NOTES

1) 20A 250V TEST LOCK RECEPTACLE HUBBELL HBL 2320
2) PLUG HUBBELL HBL 2321 REFER TO PS-902 PAGE 6
3) GROUND LUG LOCATED ON CHARGER HOUSING
4) PART OF SEARII POWER CONTROL AND INDICATION RELAY JUNCTION BOX
5) PART OF POWER OFF INDICATOR LIGHT REPEATER RELAY JUNCTION BOX (REFER TO PS-907 SHT 2A)

<< DENOTES WAGO TERMINAL

DENOTES TWISTED PAIR

RELAY DETAIL

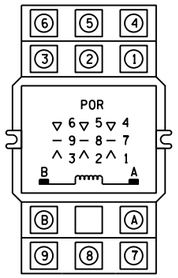

RELAY - POTTER & BRUMFIELD
MODEL KUP-14A15-240 SOCKET MOUNTABLE
240 VAC W/ 3 FORM C CONTACTS

SOCKET - SCREW TERMINAL
MODEL 27E121

IRC 20 DEC 2011

PROPOSED
DESIGN NO. 11-0550
RED-IN YELLOW-OUT

AS INSTALLED
DATE _____
BY _____
(PRINT NAME)

PROPOSED D	M	Y	REVISIONS	D	C	COMPLETED D	M	Y	C

REGION SOUTHERN
SUB. EFFINGHAM 361

SIGNALS AND COMMUNICATIONS HOMEWOOD | DES. SIA
20 DECEMBER 2011 | CH. BJW

DC DISTRIBUTION

LIS. IL
500E

EFF-160.65-11

DOT# 292 627R

REVISIONS				
NO.	DATE	BY	DESCRIPTION	APP. BY
1				
2				
3				
4				
5				

INVENSYS RAIL CORPORATION

DES.: SIA	DATE: 21/12/11	JOB NO.: PICA10343	
CKD.: BJW	ISSUE DATE: N/A	EST. NO.: XP-6173	
DRN.: SIA	PLAN NO.: N/A	SHEET 11 OF 15	
P TIME: 08:42	P DATE: $$PLOT_DATE	CAD ID.: EFF-160.65-11	

INVENSYS RAIL CORP.
LOUISVILLE DIVISION, LOUISVILLE, KY

CHECKING

REVISIONS				
NO.	DATE	BY	DESCRIPTION	APP. BY
1				
2				
3				
4				
5				

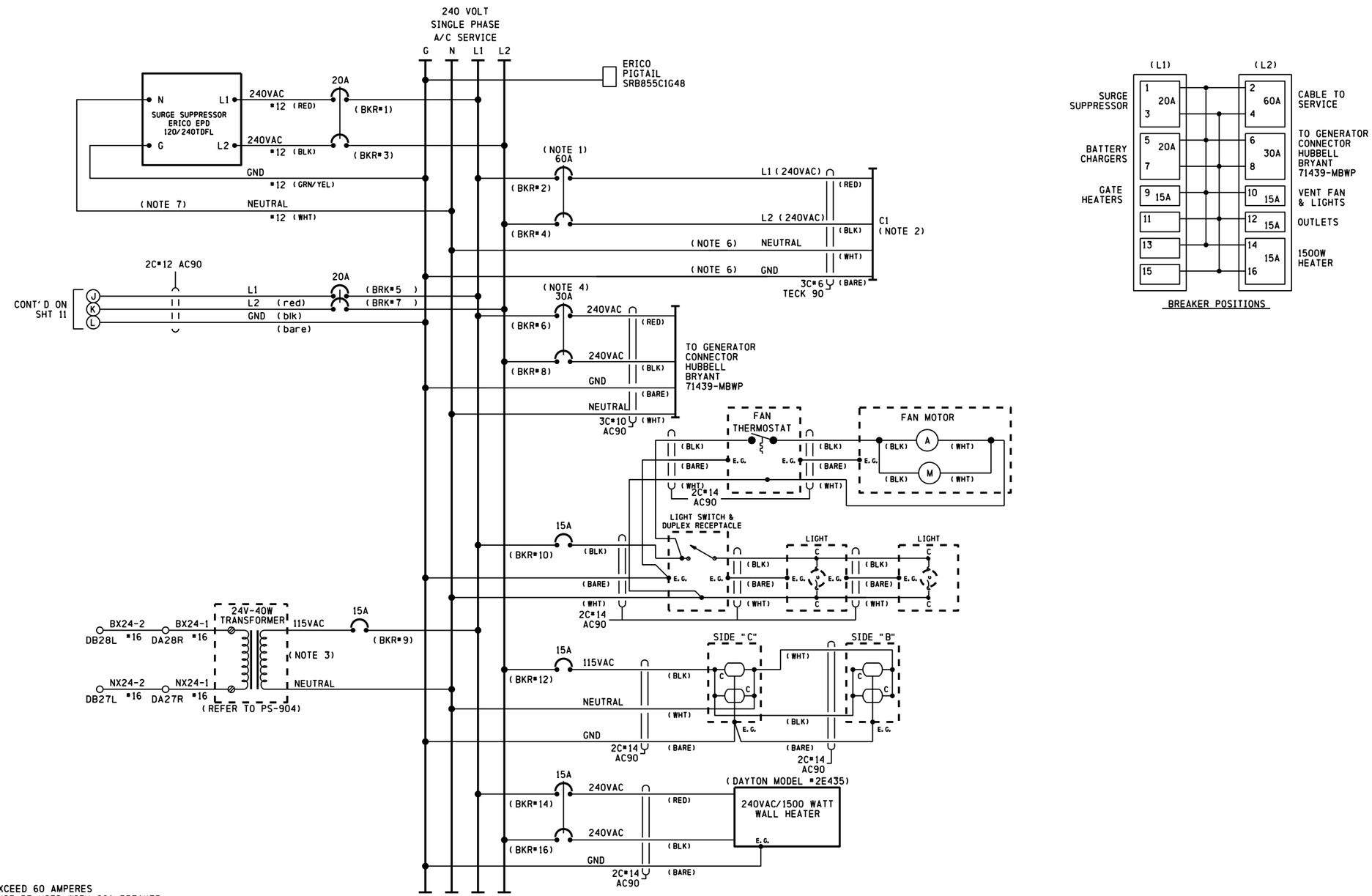

eff-160.65-12.dgn
11-JUN-2012

NOTES

1) CIRCUIT BREAKER NOT TO EXCEED 60 AMPERES
RETAINING KIT PK4MB2LA MUST BE USED WITH 60A BREAKER
2) FEEDER CIRCUIT BREAKER, AT STUB POLE SERVICE PANEL, NOT TO EXCEED 60 AMPERES
3) 24 VOLT - 40 WATT TRANSFORMER (CN STOCK #02-45-367)
4) A SWITCH TRANSFER KIT MUST BE INSTALLED BETWEEN THE SERVICE DISCONNECT BREAKER AND THE GENERATOR HOOK UP
5) WHERE SEPARATE GROUND WIRE EXISTS BETWEEN THE SERVICE AND THE LOAD CENTER, REMOVE THE BRASS COLORED BONDING SCREW (REFER TO SCHEMATIC ON BOX COVER FOR EXACT LOCATION)
6) S.C.#6 STRANDED, CSA TYPE R90 (X-LINK)
7) KEEP LEADS AS SHORT AS POSSIBLE

IRC 20 DEC 2011

PROPOSED
DESIGN NO. 11-0550
RED-IN YELLOW-OUT

AS INSTALLED
DATE _____
BY _____
(PRINT NAME)

PROPOSED			REVISIONS	D	C	COMPLETED			C
D	M	Y				D	M	Y	

REGION SOUTHERN
SUB. EFFINGHAM 361

SIGNALS AND COMMUNICATIONS HOMEWOOD — DES. SIA
20 DECEMBER 2011 — CH. BJW

AC DISTRIBUTION
LIS. IL
500E

EFF-160.65-12

DOT# 292 627R

INVENSYS RAIL CORPORATION		
DES.: SIA	DATE: 21/12/11	JOB NO.: PICA10343
CKD.: BJW	ISSUE DATE: N/A	EST. NO.: XP-6173
DRN.: SIA	PLAN NO.: N/A	SHEET 12 OF 15
P TIME: 08:42	P DATE: $$PLOT_DATE	CAD ID.: EFF-160.65-12

INVENSYS RAIL CORP.
LOUISVILLE DIVISION, LOUISVILLE, KY

CHECKING

eff-160.65-13.dgn
11-JUN-2012

REVISIONS				
NO.	DATE	BY	DESCRIPTION	APP. BY
1				
2				
3				
4				
5				

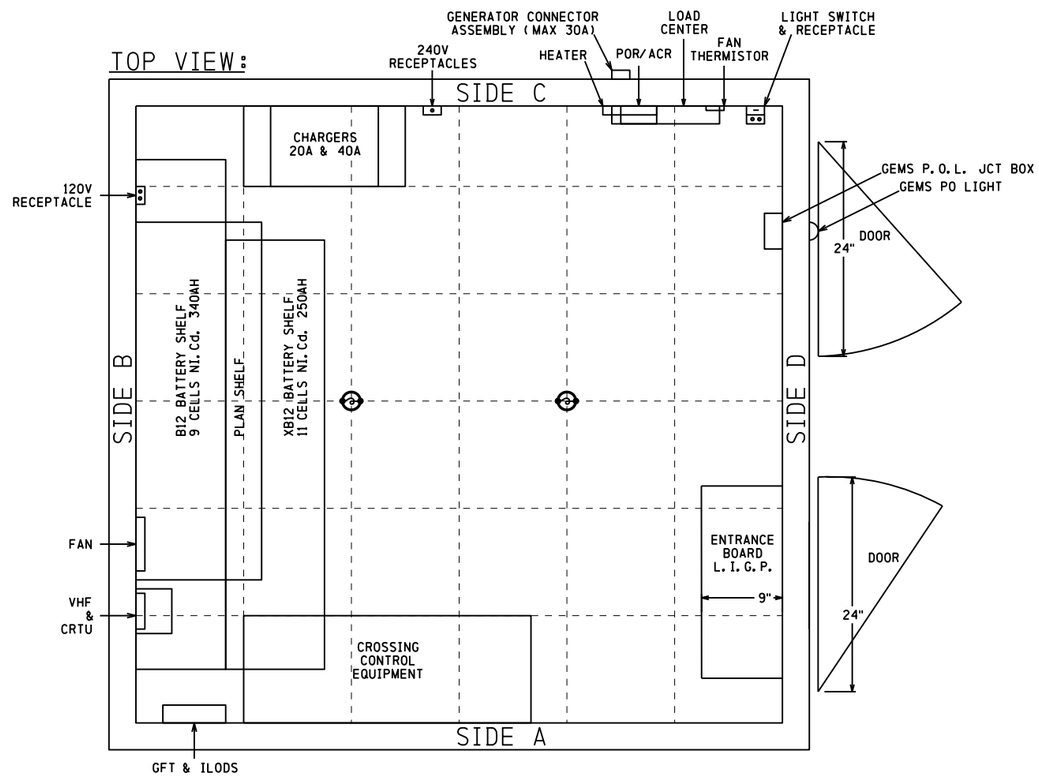

IRC 20 DEC 2011

PROPOSED
DESIGN NO. 11-0550
RED-IN YELLOW-OUT

AS INSTALLED
DATE _____
BY _____
(PRINT NAME)

PROPOSED D	M	Y	REVISIONS	D	C	COMPLETED D	M	Y	C

REGION SOUTHERN
SUB. EFFINGHAM 361

SIGNALS AND COMMUNICATIONS HOMEWOOD
DES. SIA
20 DECEMBER 2011
CH. BJW

BUNGALOW LAYOUT TOP VIEW

LIS. IL
500E

EFF-160.65-13

DOT# 292 627R

INVENSYS RAIL CORPORATION			
DES.: SIA	DATE: 21/12/11	JOB NO.: PICA10343	
CKD.: BJW	ISSUE DATE: N/A	EST. NO.: XP-6173	
DRN.: SIA	PLAN NO.: N/A	SHEET 13 OF 15	
P TIME: 08:42	P DATE: $$PLOT_DATE	CAD ID.: EFF-160.65-13	

INVENSYS RAIL CORP.
LOUISVILLE DIVISION, LOUISVILLE, KY

CHECKING

REVISIONS			
NO.	DATE	BY	DESCRIPTION	APP. BY
1				
2				
3				
4				
5				

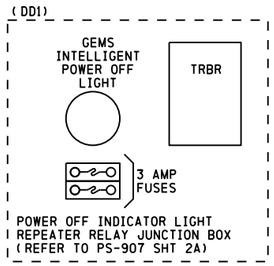

SIDE VIEW: SIDE D

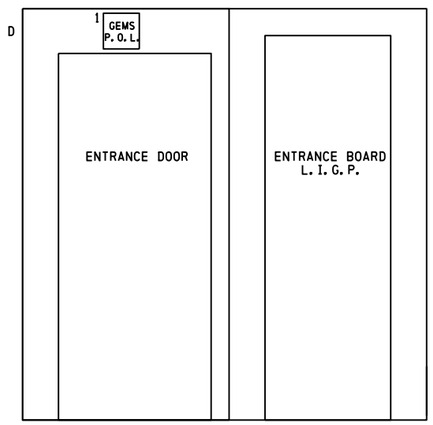

ENTRANCE BOARD L.I.G.P.

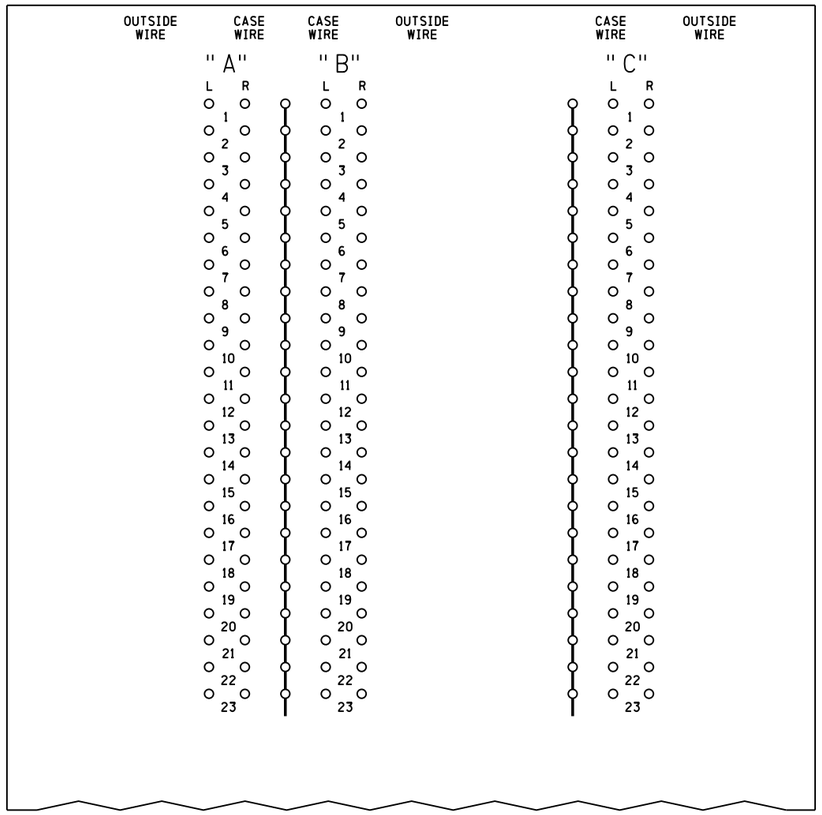

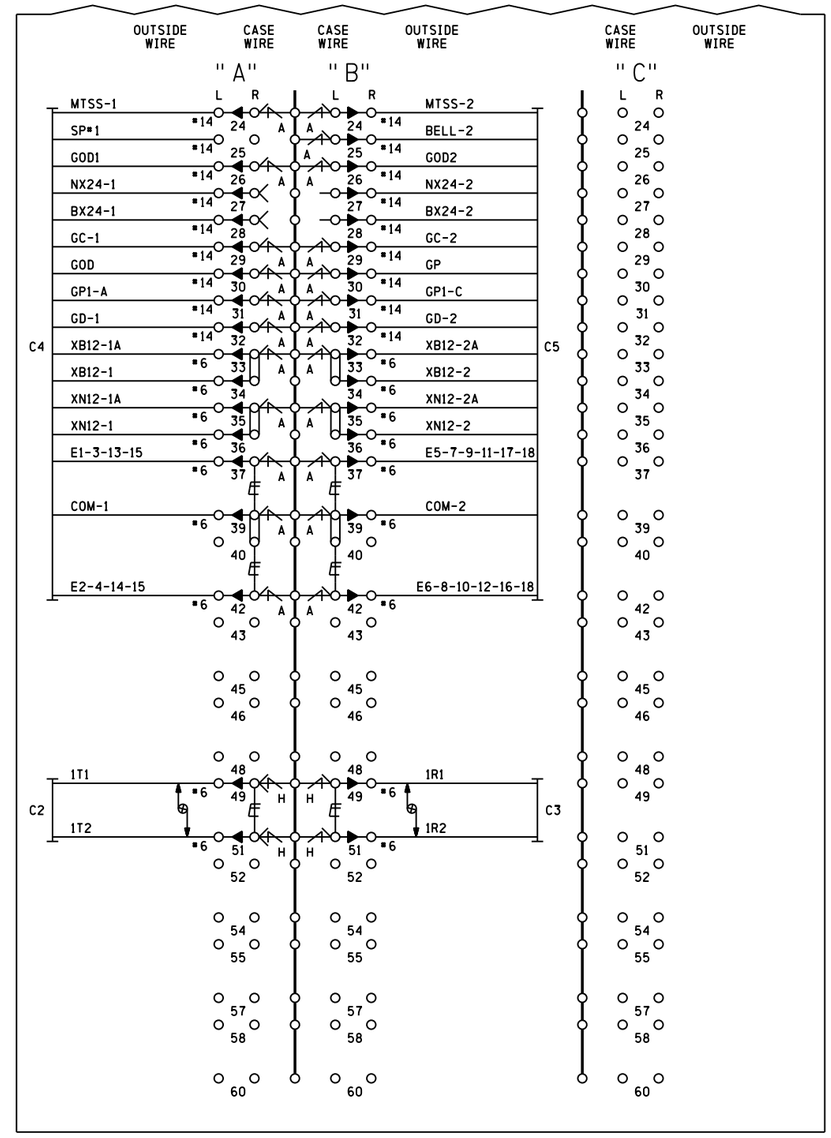

NOTES

- DENOTES HD EQUALIZER CN# 02-32-391 SAFETRAN # 022700-1X
- "A" DENOTES AIR GAP ARRESTOR CN# 02-25-168 SAFETRAN # 022485-28X
- "H" DENOTES HD AIR GAP ARRESTOR CN# 02-25-006 SAFETRAN # 022585-1X
- DENOTES GROUND PLANE
- DENOTES TWISTED PAIR

IRC 20 DEC 2011

PROPOSED
DESIGN NO. 11-0550
RED-IN YELLOW-OUT

AS INSTALLED
DATE _____
BY _____
(PRINT NAME)

PROPOSED D	M	Y	REVISIONS	D	C	COMPLETED D	M	Y	C

REGION SOUTHERN
SUB. EFFINGHAM 361

SIGNALS AND COMMUNICATIONS HOMEWOOD | DES. SIA
20 DECEMBER 2011 | CH. BJW

BUNGALOW LAYOUT SIDE D
& L.I.G.P.
LIS, IL
500E

EFF-160.65-14

DOT# 292 627R

INVENSYS RAIL CORPORATION

DES.: SIA	DATE: 21/12/11	JOB NO.: PICA10343	
CKD.: BJW	ISSUE DATE: N/A	EST. NO.: XP-6173	
DRN.: SIA	PLAN NO.: N/A	SHEET 14 OF 15	
P TIME: 08:42	P DATE: $$PLOT_DATE	CAD ID.: EFF-160.65-14	

INVENSYS RAIL CORP.
LOUISVILLE DIVISION, LOUISVILLE, KY

eff-160.65-14.dgn
11-JUN-2012

CHECKING

REVISIONS				
NO.	DATE	BY	DESCRIPTION	APP. BY
1				
2				
3				
4				
5				

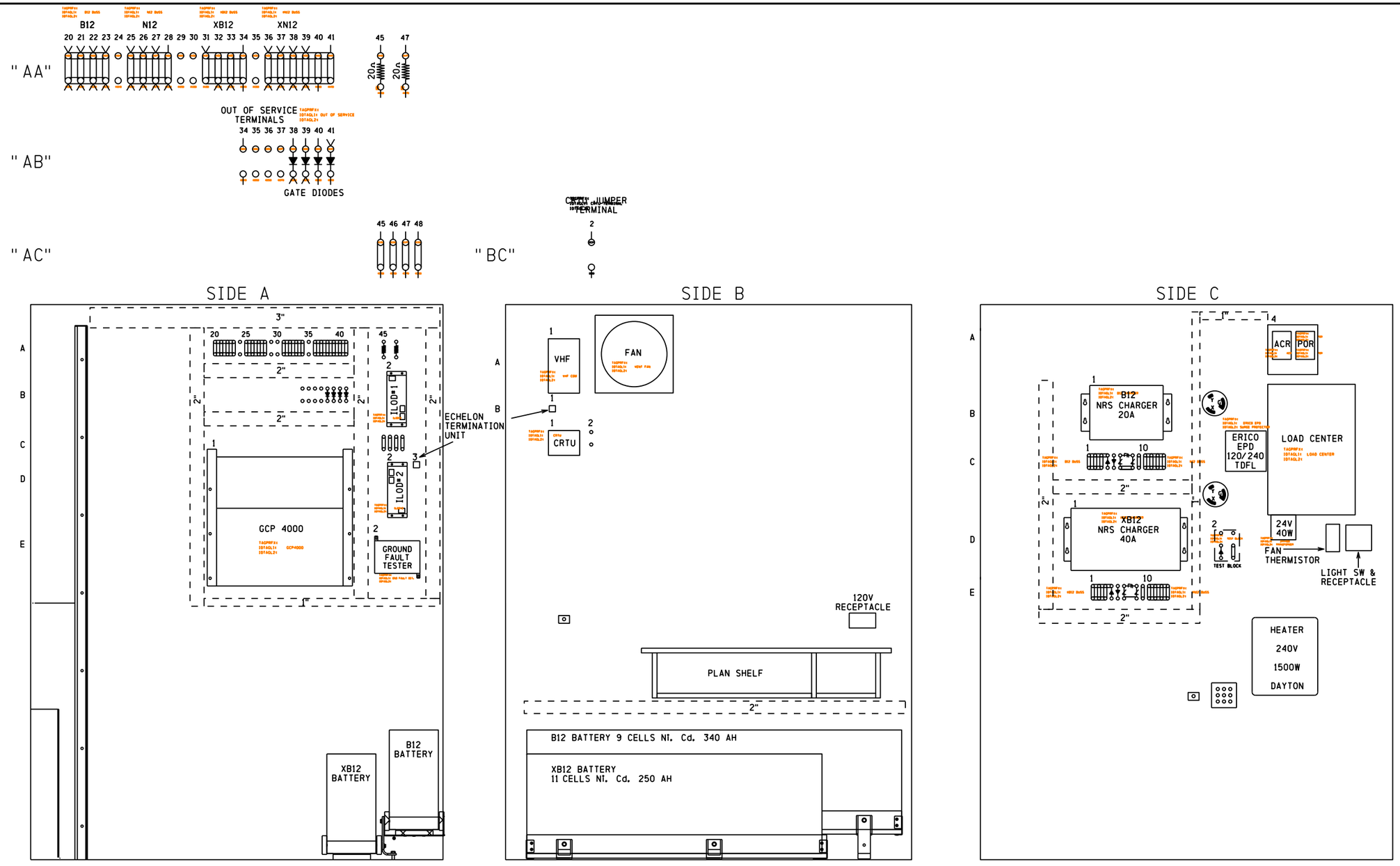

NOTES

1) SURGE PROTECTION SHOULD BE BONDED TO BUNGALOW

REPRESENTS PANDUIT

DENOTES RECTIFIER (SAFETRAN #8008A299006)

DENOTES HD EQUALIZER CN# 02-32-391
SAFETRAN # 022700-1X

"A" DENOTES AIR GAP ARRESTOR CN# 02-25-168
SAFETRAN # 022485-28X

IRC 20 DEC 2011

PROPOSED
DESIGN NO. 11-0550
RED-IN YELLOW-OUT

AS INSTALLED
DATE _____
BY _____
(PRINT NAME)

PROPOSED			REVISIONS	D	C	COMPLETED			C
D	M	Y				D	M	Y	

REGION SOUTHERN
SUB. EFFINGHAM 361

SIGNALS AND COMMUNICATIONS HOMEWOOD | DES. SIA
20 DECEMBER 2011 | CH. BJW
BUNGALOW LAYOUT SIDES A, B & C

LIS. IL
500E

EFF-160. 65-15

DOT# 292 627R

15

INVENSYS RAIL CORPORATION		
DES. : SIA	DATE: 21/12/11	JOB NO.: PICA10343
CKD. : BJW	ISSUE DATE: N/A	EST. NO.: XP-6173
DRN. : SIA	PLAN NO.: N/A	SHEET 15 OF 15
P TIME: 08:42	P DATE: $$PLOT_DATE	CAD ID.: EFF-160.65-15

INVENSYS RAIL CORP.
LOUISVILLE DIVISION, LOUISVILLE, KY

eff-160.65-15.dgn
11-JUN-2012

CHECKING

eff-160.17-t.dgn
11-JUN-2012

REVISIONS				
NO.	DATE	BY	DESCRIPTION	APP. BY
1				
2				
3				
4				
5				

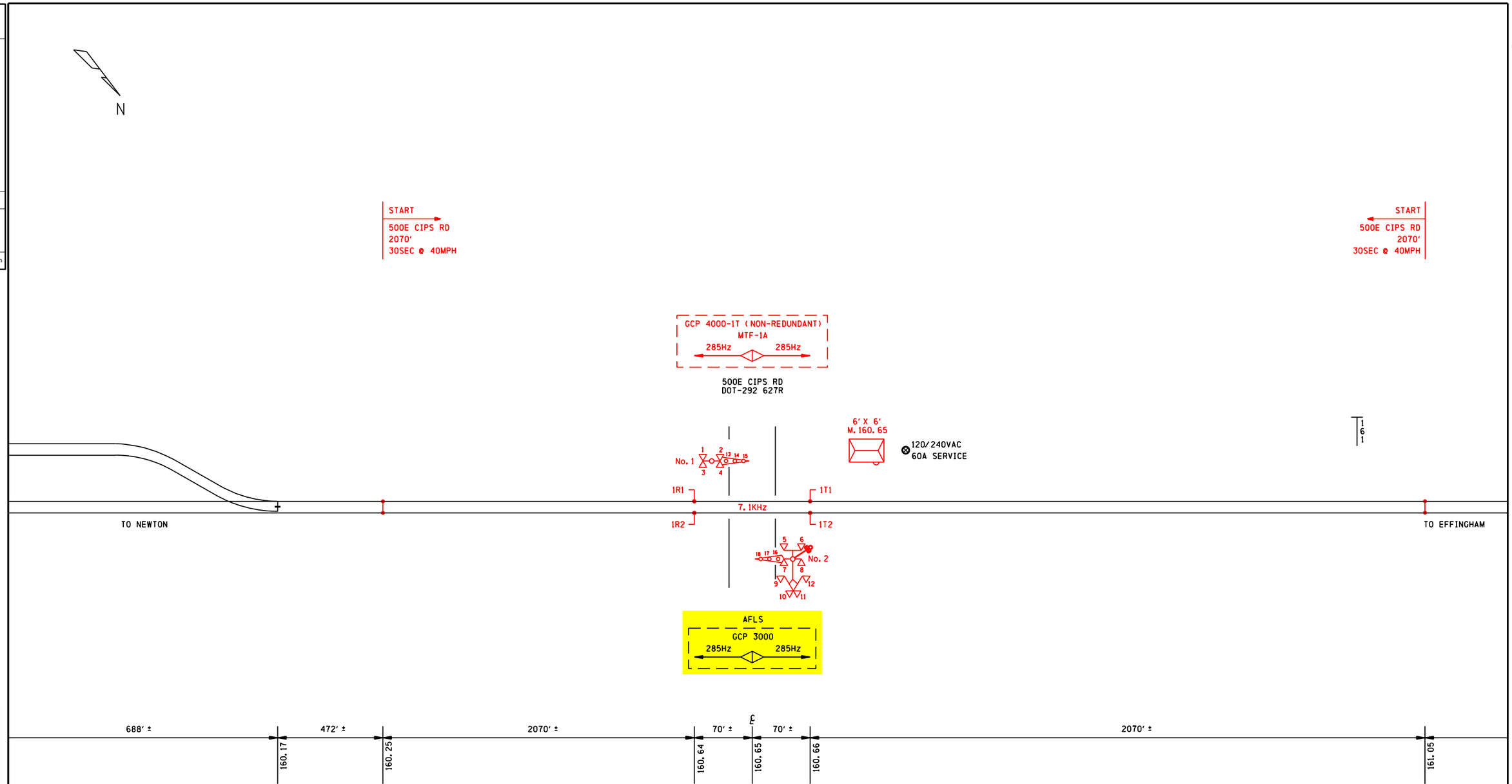

NOTES

DENOTES #6 HARD WIRE SHUNT

INVENSYS RAIL CORPORATION		
DES.: SIA	DATE: 20/12/11	JOB NO.: QDXP006173
CKD.: BJW	ISSUE DATE: N/A	EST. NO.: XP-6173
DRN.: SIA	PLAN NO.: N/A	SHEET 1 OF 1
P TIME: 08:42	P DATE: $$PLOT_DATE	CAD ID.: EFF-160.17-T

PROPOSED
DESIGN NO. 11-0550
RED-IN YELLOW-OUT

AS INSTALLED
DATE _____
BY _____
(PRINT NAME)

PROPOSED			REVISIONS	D	C	COMPLETED			C
D	M	Y				D	M	Y	

REGION SOUTHERN
SUB. EFFINGHAM 361

SIGNALS AND COMMUNICATIONS HOMEWOOD
20 DECEMBER 2011
DES. SIA
CH. BJW

TRACK PLAN
MILE 160.17 TO MILE 161.05

LIS, IL

EFF-160.17-T