ILLINOIS
COMMERCE COMMISSION

JUL 2 1 47 PM '01

CHIEF CLERK'S OFFICE

ILLINOIS COMMERCE COMMISSION

DOCKET NO. 00-0583

PREPARED DIRECT TESTIMONY OF

JASON GENOVESE

1. Q. Please state your name, business address, and present position.

A. Jason Genovese, 1901 Chouteau Ave., St. Louis, Missouri. I am currently the Planning Engineer.

2. Q. Please summarize your educational background and professional experience.

A. I received a Bachelor of Science in Electrical Engineering from Southern Illinois University at Carbondale in May of 1991. I have worked for Illinois Power Company since May 1991 until approximately February 2001.

3. Q. What are your responsibilities in your present position?

A. Planning Engineer. I am responsible for the 34 kV and 69 kV transformers in the eastern and southern regions of Illinois within the territory of Ameren/CIPS.

4. Q. Have you previously testified before the Illinois Commerce Commission ("Commission")?

A. No.

5. Q. In addition to your prepared testimony in IP Exhibit 4.0, are you sponsoring any other exhibits?

A. Yes. I am sponsoring IP Exhibits 4.1 and 4.2.

6. Q. What is the purpose of your testimony?

A. In my testimony, I discuss whether the Ameren/CIPS 69 kV line has the capacity to withstand an additional 15 MWs to serve a new customer in

23 Section 1, Township 9 South, Range 7 East, in Cottage Township of
24 Saline County
25 7. Q. To your knowledge, has Illinois Power Company asked Ameren/Cips
26 to determine whether the Ameren/CIPS 69 kV line has the capacity to
27 handle an additional 15 MWs?
28 A. Yes. Illinois Power Company asked Ameren/CIPS to determine whether
29 the 69 kV line had the capacity to provide an additional 15 MWs.
30 Initially, Ameren/CIPS provided a response that the 69 kV line could
31 withstand an additional 10 MWs. Subsequently, Illinois Power Company
32 requested a study to be performed on 15 MWs and we recently determined
33 that the line could withstand an additional load of 15 MWs.
34 8. Q. Have you completed any studies relative to the issue of capacity to
35 withstand the additional 15 MWs?
36 A. Yes. Attached hereto as "IP Exhibit 4.1" is one copy of the study which I
37 conducted. This study shows that the 69 kV has the capacity to provide an
38 additional 15 MW to the new customer.
39 9. Q. Did you review outage information for the 69 kV line?
40 A. Yes. Attached as "IP Exhibit 4.2" is one copy of the outage information
41 on the line running from Muddy Water Substation to Shawneetown Line.
42 The exhibit provides the interruption or cause, date, substation
43 identification, breaker identification, the time of the outage, the duration
44 of the outage, other information, lockout and weather type.

10. Q. What is the significance of a false lockout?

A. A false lockout is a momentary lapse in service not greater than one minute in duration and does not require human intervention. Thus, a false lockout is not considered an outage.

11. Q. If the cause of the interruption is weather, customer equipment or scheduled, is it an uncontrollable outage?

A. Yes. Ameren/CIPS considers outages related to weather, customer equipment, and pre-arranged outages as uncontrollable. A tree outage is also uncontrollable so long as a limb has broken and come into contact with the line. If a tree outage is due to growth, it is controllable.

12. Q. Is Ameren/CIPS planning to service the 69 kV line by installing new conductors?

A. Yes. Currently, Ameren/CIPS is considering expending approximately $1.9 million dollars to put new conductors on the line.

13. Q. Does that conclude your Direct Testimony?

A. Yes.

System Analysis

of the

Willow Lake Mine Portal No. 3

Load Addition

Ameren CIPS

Engineer: Jason E. Denover

Date: 6/22/01

Approval: Gary Brownfield

Date: 6/22/01

EXHIBIT

4.1

Table Of Contents

Scope and Purpose 2

Summary of Results 2

Recommendations 2

Initial Conditions 3
Bulk Supply Substations 3
Substation Capacitors 3
Muddy to Shawneetown 69 kV line 3

Assumptions 3

Discussion of Study Results 4
Normal Operating Conditions – Year 1 4
Normal Operating Conditions – Year 3 4
Contingency - Harco Source, outage of Muddy XFMR – Year 1 4
Contingency - Harco Source, outage of Muddy XFMR – Year 3 4
Contingency – Muddy Source, outage of the Norris XFMR – Year 3 5
Contingency - Norris Source, outage of the Muddy XFMR – Year 1 5

Appendix A 7
AmerenCIPS Distribution Planning Guidelines 7
AmerenCIPS - Switching Diagram (Harrisburg Area) 8

Appendix B - PTI Load Flow Results 9
Load Flow Summary – Willow Lake Mine Portal No. 3 9
BASE CASE - NO COAL MINE ADDITION 10
MUDDY SOURCE - COAL MINE AT 10 MW 11
MUDDY SOURCE -10 MW, 4.3 MVAR AT COAL MINE 12
MUDDY SOURCE - COAL MINE AT 15 MW 13
MUDDY SOURCE, 15 MW, 4.3 MVAR CAP AT COAL MINE 14
HARCO SOURCE/MUDDY OUT-COAL MINE OFF 15
HARCO SOURCE / MUDDY OUT - COAL MINE 10 MW ON 16
HARCO SOURCE/ MUDDY OUT - COAL MINE 15 MW'S 17
MUDDY SOURCE- NORRIS TX OUT/- COAL MINE OFF 18
MUDDY SOURCE - NORRIS TX OUT / - COAL MINE 10 MW'S 20
MUDDY SOURCE - NORRIS TX OUT / - COAL MINE 10 MW'S, 4.3 MVAR CAP 22
MUDDY SOURCE - NORRIS TX OUT - 15 MW COAL MINE LOAD 24
HARCO SOURCE - 15 MW, 4.3 MVAR AT COAL MINE - HARCO CAP ON 26
HARCO SOURCE - MUDDY OUT - - 10 MW, 4.3 MVAR CAP AT MINE 27
HARCO SOURCE - 15 MW - 4.3 MVAR AT COAL MINE 28
HARCO SOURCE - 15 MW , 9.3 MVAR AT COAL MINE 29
MUDDY SOURCE / NORRIS OUT / 15 MW, 4.3 MVAR CAP BANK AT COAL MINE 30
MUDDY SOURCE / NORRIS OUT / 15 MW, 9.3 MVAR CAP BANK AT COAL MINE 32
NORRIS SOURCE, MUDDY OUT COAL MINE OFF 34
NORRIS SOURCE, MUDDY OUT, 10 MW AT COAL MINE 36
NORRIS SOURCE / MUDDY OUT - 10 MW, 4.3 MVAR CAP AT COAL MINE 38
NORRIS SOURCE, MUDDY OUT - 10 MW, 9.3 MVAR CAP BANK AT COAL MINE 40

Scope and Purpose

The purpose of this report is to analyze the capability of the distribution system to serve the proposed customer known as Willow Lake Mine Portal No. 3 in Saline County Illinois, and to recommend facility upgrades necessary to meet AmerenCIPS planning guidelines.

Summary of Results

Prior to the coal mine addition, the voltages and associated facilities serving the area are well within the boundaries set by AmerenCIPS planning guidelines for both normal and contingency conditions.

The addition of the coal mine results in marginal voltages and transformer thermal overloads during several contingency conditions. These planning guideline concerns are discussed in detail starting on page 4. Adding capacitor banks totaling 9.3 MVARs enables the distribution system to maintain the same level of service that existed prior to the coal mine load addition, and complies with AmerenCIPS planning guidelines.

Recommendations

- Add approximately 4.2 MVAR's of capacitance to the coal mine substation. The capacitor should be switched on per current controls to follow the load.

- Add a 69 kV 5.1 MVAR capacitor located at or near the coal mine set to switch on at a voltage of 0.97 pu and off at voltage of 1.044 p.u. with a 60 second time delay. The capacitor is necessary during contingency conditions.

- Establish a reserve interconnection with Southern Illinois Power Cooperative at Ridgway IL.

- Increase the overcurrent relay setting at the Muddy Substation Breaker 710 from 47 to 55 MVA.

- Increase the overcurrent relay setting at the Norris Substation Breaker 740 from 47 to 55 MVA.

Initial Conditions

The area is served from the follow facilities:

Bulk Supply Substations

Substation	Voltage (kV)	Top Rating (MVA)	Comment
Muddy	138 / 69	57	Normal Source
Harco	138 / 69	59.5	Reserve Source
Norris	138 / 69	59.8	Reserve Source

Note: These substation transformers do not contain tap-changing controls

Substation Capacitors

Substation	Voltage (kV)	Rating (MVAR)
Muddy	69	6.3
Ridgeway	69	6.0
Harco	69	6.3
Norris	69	6.3
Norris City	12	1.8

Muddy to Shawneetown 69 kV line

The Muddy to Shawneetown line is a double circuit 69 kV steel tower line constructed in 1924. Each circuit has 3/0 AWG ACSR (6/1) conductor that has a summer normal rating of 42.4 MVA. In the late 1970's jumpers were installed between the double circuits from Muddy to IP-Ridgway substation in order to increase the operating characteristics of the line.

Assumptions

- The impact of the coal mine addition was analyzed with a magnitude of 10 MWs in year one, growing to 15 MWs in year three with a power factor of 85%.

- The magnitude of the customers served from the Muddy to Shawneetown line included the IP- Eldorado (14.5 MW), IP – Ridgway (5.5 MW), IP – Shawneetown (5.2 MW) and AmerenCIPS – New Haven (2.0 MW) loads.

- The proposed coal mine will tap structure 526 which is approximately 7.8 miles from the Muddy Substation.

Discussion of Study Results

The following discussion references data contained in Appendix B , "Load Flow Summary Willow Lake Mine Portal No. 3" on page 8. Additional data detail is included within the PTI load flow reports referenced in Appendix B starting on page 9. The voltages referenced within this report are given in per unit.

Each scenario studied is under peak loading conditions.

Normal Operating Conditions – Year 1

The coal mine addition creates a 4.4% reduction in voltage at the coal mine bus (1.015-0.971=.044). The voltage drop is reduced from 4.4% to a 2.3% (1.015 - 0.992) by adding a 4.3 MVAR capacitor bank at the coal mine substation.

Normal Operating Conditions – Year 3

The coal mine addition creates a 4.3% (1.015 - 0.972) reduction in voltage at the coal mine bus. The voltage drop is slightly less than the amount in year 1 due to the voltage rise caused by the operation of the Muddy 6.3 MVAR 69 kV capacitor. The overcurrent relay at the Muddy substation is at 95% of its current setting. The 2-3/0 ACSR conductor exiting the Muddy Breaker is approximately 50% loaded. The Muddy 138 / 69 kV transformer is loaded to 77%. No planning guideline violations are observed.

The voltage drop is reduced from 4.3% to 2.2% by adding a 4.3 MVAR capacitor bank at the coal mine substation. Though the capacitor is not required in order to alleviate planning guideline violations (see Appendix A, page 6), the var support is recommended to reduce loading on the Muddy substation and to maintain the voltage near unity at the coal mine and surrounding area. The capacitor addition corrects the power factor of the coal mine from 85% to 89%.

Contingency - Harco Source, outage of Muddy XFMR – Year 1

During the contingency of the Muddy Substation, either the Harco substation or the Norris Substation can supply the affected load. The Harco substation can pick up the affected load by closing breaker 707 at the Muddy Substation.

Voltage at the coal mine during this contingency will be similar to the normal conditions due to the additional reactive support supplied from the Muddy and Harco substation capacitors (See Appendix A – Load Flow Summary , Willow Lake Mine Portal No. 3). The loading on the Harco substation transformer increases from 57% to 78%.

Contingency - Harco Source, outage of Muddy XFMR – Year 3

The coal mine addition creates a 5% reduction in voltage at the coal mine bus (0.99-0.942=.05). The Harco Substation transformer loading increases from 57% to 91% and the overcurrent relay at the Muddy Substation Breaker 710 increases from 58% to 98% of the current setting.

The addition of a 4.3 MVAR capacitor bank at the coal mine, causes the voltage drop to decrease from 5% to 1.6% assuming both the Muddy capacitor and Harco Capacitors are switched on. Due to the distance from the Harco Substation, it is doubtful the Harco capacitor will switch per voltage sensing controls and must be manually switched on. If the Harco 6.3 MVAR capacitor does not operate, the voltage drop at the coal mine will remain at 5% or 0.942 p.u. With the Harco Substation capacitor switched on, the Harco transformer loading decreases from 91% to 89%.

The addition of a 5.1 MVAR capacitor at the coal mine substation, causes the voltage drop to decrease from 5% to 1.0% assuming the Harco Capacitor is switched off. The Harco transformer loading is decreased from 91% to 89%, and the loading on the overcurrent relay at the Muddy Substation Breaker 710 decreases from 98% to 91% of its setting. A second capacitor at the coal substation with automatic voltage controls will eliminate marginal voltages and reduce the loading on the Harco substation transformer.

Contingency – Muddy Source, outage of the Norris XFMR – Year 1

During the contingency of the Norris Substation, the Norris city, Norris city Northeast, Texas Eastern, and Wayne-White Electric Cooperative loads are transferred to the Muddy Substation.

The coal mine addition causes the Muddy Substation transformer loading to increase from 75% to 94% and causes a 2% reduction in voltage (0.968 p.u.). No other voltage or thermal concerns are observed.

Contingency – Muddy Source, outage of the Norris XFMR – Year 3

The coal mine addition creates a 5.1% reduction in voltage at the coal mine bus (0.991-0.94= 0.051). The Muddy Substation Transformer loading increases from 75% to 107%. The overcurrent relay setting at the Muddy Substation Breaker 710 is at 98% loaded.

The voltage drop is reduced from 5.1% to a 2.8% (0.991 0.963 = .028) voltage drop by adding a 4.3 MVAR capacitor bank at the coal mine substation. The Muddy Substation Transformer loading decreases from 107% to 104%.

The voltage drop is reduced further from 2.8% to 0% by adding a 5.1 MVAR. The Muddy Substation Transformer loading decreases from 104% to 101%. Some rotating outages may be used to alleviate the 1 % overload on the Muddy Substation Transformer. Alternatively, a reserve source with Southern Illinois Power Cooperate at Ridgway would eliminate the need to drop any load.

Contingency - Norris Source, outage of the Muddy XFMR – Year 1

During the contingency of the Muddy Substation, either the Harco substation or the Norris Substation can supply the effected load. When sourced from the Norris substation, the NorthEast Norris and City of Carmi is transferred to the Crossville Substation.

The voltage is marginal during this contingency condition (0.95 pu) before the coal mine load addition and the Norris transformer is 91.6% loaded.

The coal mine addition initiates extreme low voltage (0.69) when supplied from the Norris Substation. A 9.3 MVAR capacitor addition increases the voltage to 0.88 p.u., however does not alleviate voltage planning guideline violations nor the 114% thermal overload on the Norris transformer. The recommended solution is to initiate rotating outages or pursue an alternate source with Southern Illinois Power Cooperative at Ridgway.

I. Distribution Planning Guidelines

A. Anticipated Summer Peak Load should be served with a single segment outage. The exception to this is customers served from a radial tap when the tap is outaged.

1. Quality of service shall be maintained by providing voltages, during these outage conditions, with the range of +/- 7% of the nominal system voltage.

2. No system component shall be overlooked once appropriate switching has occurred.

B. Anticipated summer peak load should be served with a single generation unit outage

1. Quality of service shall be maintained by providing voltages, during these outage conditions, with the range of +/- 7% of the nominal system voltage.

2. No system component shall be overlooked once appropriate switching has occurred.

C. Overload Criteria

1. No system component shall be overloaded once appropriate switching has occurred. This criterion recognizes that much of the electrical equipment utilized in the distribution system is maximum rated. That is, its rating is the maximum load allowable. Even transformers, which degrading of insulation or "loss of life" when overloaded. (See ANSI Standard 57.92). Therefore, overloads of equipment should be minimized.

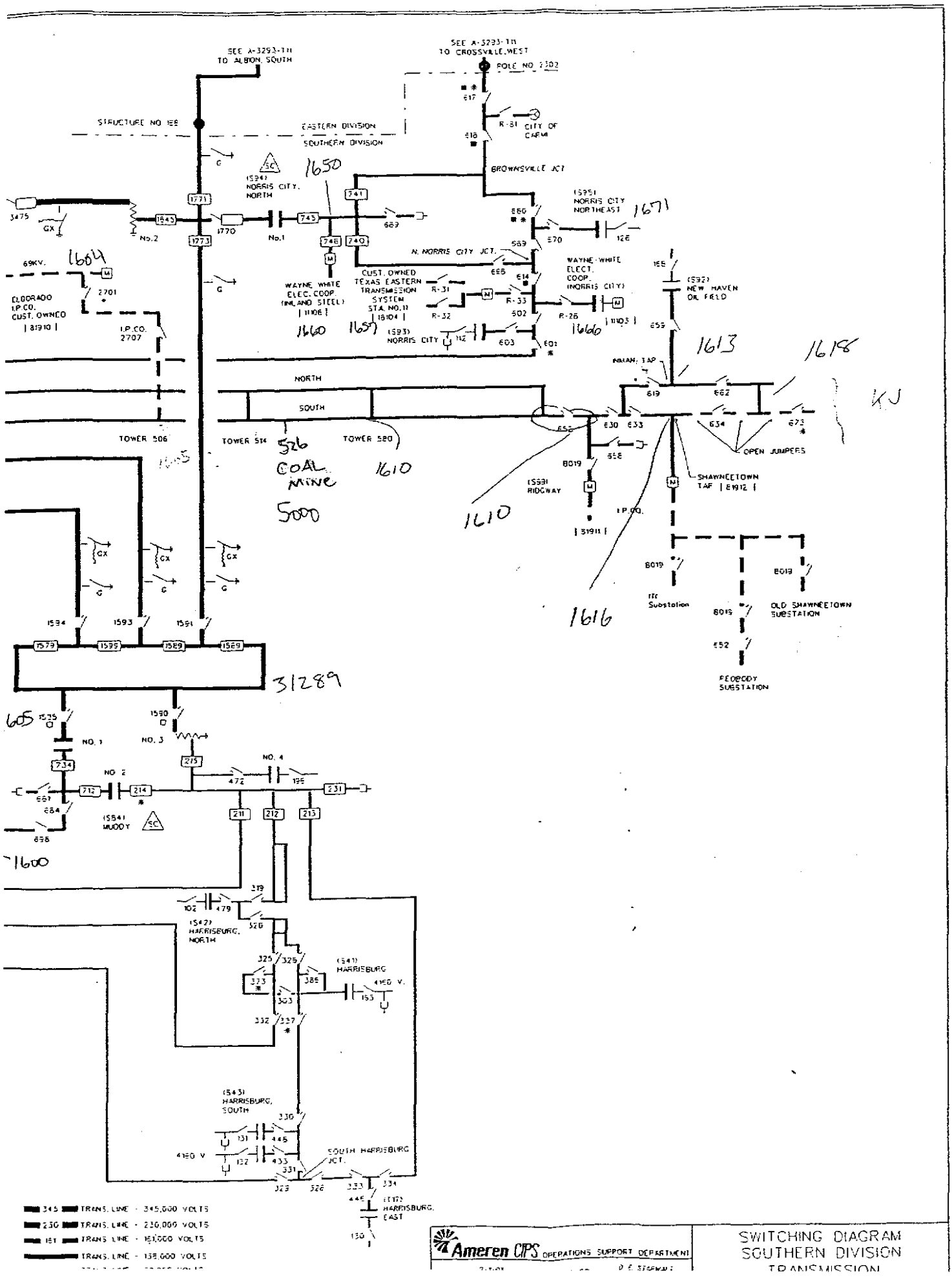

Ameren CIPS OPERATIONS SUPPORT DEPARTMENT

SWITCHING DIAGRAM
SOUTHERN DIVISION
TRANSMISSION

8

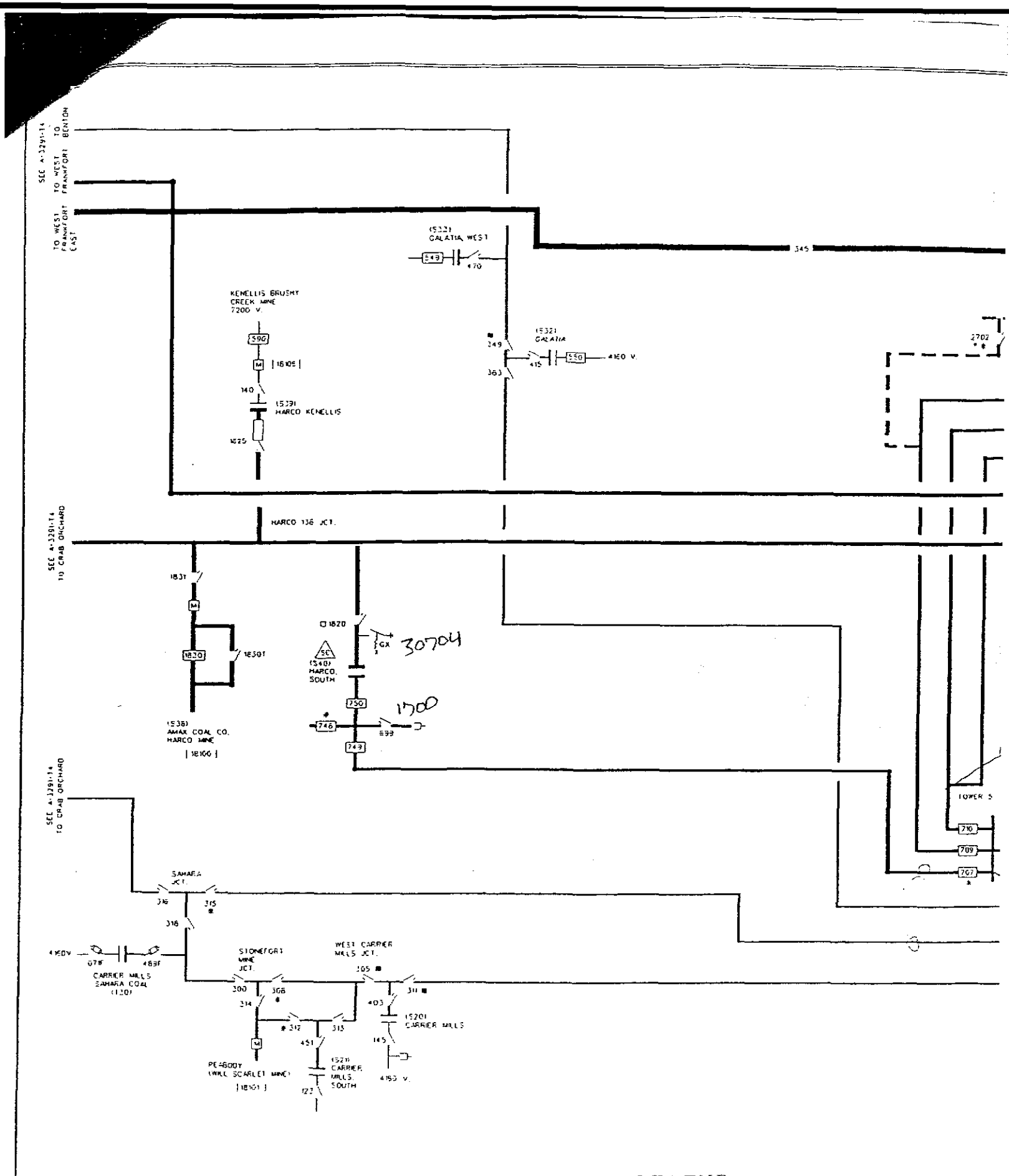

= LEGEND =

- LOAD DISPATCHER CONTROLLED
- NOTE: LOW VOLTAGE CAPACITOR, BY-PASS AND OTHER MISC. SWITCHES HAVE BEEN OMITTED. FOR DETAIL REFER TO SINGLE LINE DIAGRAM OF STATION
- [***] SUBSTATION NUMBER
- [*****] CUSTOMER NUMBER
- 3 PHASE TRANSFORMER WITH SWITCHING
- 1 PHASE TRANSFORMER
- CAPACITOR
- M METER
- FUSE
- TRANS. LINE FED OFF DISTRIBUTION
- AUTOMATIC TRANSFER SWITCH
- GX HIGH SPEED GROUND SWITCH
- S SWITCH CABINET
- TRANSFORMER
- AUTO TRANSFORMER
- GENERATOR
- SECTIONALIZING SWITCH
- FULL LOAD BREAK
- LOOP SPLITTING CURRENT INT.
- CHARGING CURRENT INTERRUPTER
- LOOP SPLITTING & CHARGING CURRENT INTERRUPTER
- DISCONNECT SWITCH
- FUSE DISCONNECT
- AIR BREAK SWITCH
- GROUND SWITCH
- CIRCUIT BREAKER
- CS CIRCUIT SWITCHER WITH INTERRUPTER ONLY
- CIRCUIT SWITCHER WITH SWITCH
- SC STATION EQUIPPED FOR SUPERVISORY CONTROL
- UNDERGROUND PEDESTAL

Norris City 12 kV 1666	WWC 69kV 1660	Texas Eastern 69kV 1657	Norris City NE 12 kV 1671	Comments	Muddy XFMR Loading 1600	Norris XFMR loading 1650	Harco XFMR Loading 1700
					48%		
					69%		
					67%		
				OC Relay 710 at 95%	77%		
				OC Relay 710 at 75%			
							57%
							78%
				OC Relay 710 at 98%			91%
				OC Relay 710 at 96%, Harco Cap off			93%
				OC Relay 710 at 93%, Harco Cap			89%
				OC Relay 710 at 91%, Harco Cap off			89%
0.982	0.973	0.972	0.996		75%		
0.97	0.961	0.96	0.984		94%		
0.99	0.98	0.979	1.003		92%		
0.946	0.938	0.937	0.96		107%		
0.966	0.957	0.957	0.98	OC Relay 710 at 94%	104%		
0.991	0.981	0.981	1.005	OC Relay 710 at 90%	101%		
1.001	0.991	0.992	1.001	OC Relay 740 loaded to 90%		92%	
0.856	0.853	0.857	1.012	OC Relay 740 loaded to150%		126%	
0.912	0.906	0.908	1.016	OC Relay 740 loaded to 132%		118%	
0.96	0.952	0.954	1.02	OC Relay 740 loaded to 120%		114%	

is Xfmr outages

Load Flow Sum
Willow Lake Mine P

BUS	*Muddy 69 kV* 1600	*Harco 69 kV* 1700	*Norris 69 kV* 1650	*Eldorado 69 kV* 1604	*Coal Mine 69 kV* 5000	*Ridgeway 69 kV* 1610	*Shawnee 69 kV* 1616	*Newhaven 69 kV* 1613
Muddy Source	1.025			1.009	1.015	1.012	1.011	1.012
10 MW addition	0.992			0.969	0.971	0.968	0.968	0.968
10 MW addition & 4.3 MVAR Cap Bank	1.009			0.989	0.992	0.989	0.989	0.989
15 MW addition	0.999			0.973	0.972	0.971	0.971	0.971
15 MW addition & 4.3 MVAR Cap Bank	1.017			0.994	0.994	0.993	0.993	0.993
Harco Source (Muddy 138/69 xfmr out)		1.019		0.984	0.99	0.986	0.986	0.986
10 MW addition		0.982		0.984	0.984	0.981	0.981	0.981
15 MW addition		1.007		0.943	0.942	0.94	0.94	0.94
15 MW addition & 4.3 MVAR Cap Bank		0.998		0.942	0.942	0.94	0.94	0.94
15 MW addition & 4.3 MVAR Cap Bank		1.026		0.974	0.974	0.972	0.972	0.972
15 MW addition & 9.3 MVAR Cap Bank		1.02		0.985	0.98	0.978	0.977	0.977
Muddy Source (Norris 138/68 xfmr out)	1.002			0.985	0.991	0.988	0.988	0.988
10 MW addition	0.99			0.967	0.968	0.966	0.966	0.966
10 MW addition & 4.3 MVAR Cap	1.009			0.995	0.991	0.989	0.988	0.995
15 MW addition	0.969			0.941	0.94	0.938	0.938	0.938
15 MW addition & 4.3 MVAR Cap	0.987			0.963	0.963	0.961	0.961	0.961
15 MW addition & 9.3 MVAR Cap	1.01			0.989	0.991	0.989	0.989	0.989
Norris Source (Muddy 138/69 xfmr out)	0.964		1.005	0.946	0.952	0.948	0.948	0.948
10 MW addition	0.73		0.892	0.695	0.696	0.69	0.69	0.69
10 MW addition & 4.3 MVAR Cap	0.819		0.936	0.79	0.793	0.788	0.787	0.784
10 MW addition & 9.3 MVAR Cap	0.898		0.974	0.876	0.88	0.875	0.875	0.875

Recommendations:

A 9.3 MVAR cap is required for voltage and reactive support under the Muddy Xfmr or No
A 4.3 MVAR Cap is required for voltage support during normal conditions.

PTI INTERACTIVE POWER SYSTEM SIMULATOR--PSS/E TUE, JUN 05 2001 9:20
EASTERN REGIONS - 2001 SUMMER OPERATING GUIDE
BASE CASE - NO COAL MINE ADDITION

BUS DATA								LINE DATA											
FROM BUS	NAME	AREA ZONE	VOLT PU/KV	ANGLE	GEN MW/MVAR	LOAD MW/MVAR	SHUNT MW/MVAR	TO BUS	NAME	CKT	AREA	MW	MVAR	TRANSFORMER RATIO	TRANSFORMER ANGLE	RATING A %I	RATING A MVA
1600	MUDDY 69.0	356	1.025	17.6	0.0	0.0	0.0										
		834	70.71		0.0	0.0	0.0	1603	ELDOEMER69.0	1	356	0.0	-0.2			0	57
								1605	ELDONTAP69.0	1	356	27.3	1.7			57	47
								31289	MUDDY 138	1	356	-27.3	-1.5	0.975UN	-30.0UN	48	56
1605	ELDONTAP69.0	356	1.016	16.9	0.0	0.0	0.0										
		834	70.09		0.0	0.0	0.0	1600	MUDDY 69.0	1	356	-27.1	-1.6			57	47
								1604	ELDORADO69.0	1	357	14.6	4.8			35	43
								1606	MUDDY2 69.0	1	356	6.3	-1.6			16	41
								1608	MUDDY3 69.0	1	356	6.3	-1.6			16	41
1604	ELDORADO69.0	357	1.009	16.6	0.0	14.5	0.0										
		834	69.62		0.0	4.8	0.0	1605	ELDONTAP69.0	1	356	-14.5	-4.8			35	43
5000	BBTAP 69.0	356	1.015	16.7	0.0	0.0	0.0										
		834	70.01		0.0	0.0	0.0	1606	MUDDY2 69.0	1	356	-6.3	1.4			15	41
								1607	MUDDY1 69.0	1	356	6.3	-1.6			16	41
1610	RIDGWAY 69.0	357	1.012	16.2	0.0	5.5	0.0										
		834	69.80		0.0	1.8	-6.4	1607	MUDDY1 69.0	1	356	-6.1	1.4			8	80
								1608	MUDDY3 69.0	1	356	-6.2	1.4			15	41
								1616	SHWNE TP69.0	1	357	0.2	0.0			1	41
								1618	MTR: KU 69.0	1	356	6.6	1.9				
1612	N HVN TP69.0	356	1.012	16.2	0.0	0.0	0.0										
		834	69.79		0.0	0.0	0.0	1607	MUDDY1 69.0	1	356	-0.1	-0.1			0	41
								1613	NEWHAVEN69.0	1	356	1.9	0.4			3	67
								1618	MTR: KU 69.0	1	356	-1.8	-0.4			4	41
1614	NEWHAVEN12.5	356	1.020	-16.3	0.0	1.9	0.0										
		834	12.71		0.0	0.5	0.0	1613	NEWHAVEN69.0	1	356	-1.9	-0.5	0.975UN	30.0UN	64	3
1616	SHWNE TP69.0	357	1.011	16.2	0.0	5.0	0.0										
		834	69.79		0.0	1.7	0.0	1610	RIDGWAY 69.0	1	357	-0.2	-0.1			1	41
								1618	MTR: KU 69.0	1	356	-4.8	-1.5			12	41
1700	HARCO S 69.0	356	1.035	22.5	0.0	0.0	0.0										
		816	71.42		0.0	0.0	0.0	30704	HARCO 138	1	356	0.0	0.0	0.975UN	-30.0UN	0	48

PTI INTERACTIVE POWER SYSTEM SIMULATOR--PSS/E TUE, JUN 05 2001 9:22
EASTERN REGIONS - 2001 SUMMER OPERATING GUIDE
MUDDY SOURCE - COAL MINE AT 10 MW

BUS DATA								LINE DATA									
FROM BUS	NAME	AREA ZONE	VOLT PU/KV	ANGLE	GEN MW/MVAR	LOAD MW/MVAR	SHUNT MW/MVAR	TO BUS	NAME	CKT	AREA	MW	MVAR	TRANSFORMER RATIO	TRANSFORMER ANGLE	RATING A %I	RATING A MVA
1600	MUDDY 69.0	356	0.992	15.5	0.0	0.0	0.0										
		834	68.48		0.0	0.0	0.0	1603	ELDOEMER69.0	1	356	0.0	-0.2			0	57
								1605	ELDONTAP69.0	1	356	37.7	9.1			83	47
								31289	MUDDY 138	1	356	-37.7	-8.9	0.975UN	-30.0UN	69	56
1605	ELDONTAP69.0	356	0.976	14.5	0.0	0.0	0.0										
		834	67.38		0.0	0.0	0.0	1600	MUDDY 69.0	1	356	-37.2	-8.6			83	47
								1604	ELDORADO69.0	1	357	14.6	4.8			37	43
								1606	MUDDY2 69.0	1	356	11.3	1.9			29	41
								1608	MUDDY3 69.0	1	356	11.3	1.9			29	41
1604	ELDORADO69.0	357	0.969	14.2	0.0	14.5	0.0										
		834	66.88		0.0	4.8	0.0	1605	ELDONTAP69.0	1	356	-14.5	-4.8			37	43
5000	BBTAP 69.0	356	0.971	14.2	0.0	10.0	0.0										
		834	66.98		0.0	6.2	0.0	1606	MUDDY2 69.0	1	356	-15.4	-4.4			40	41
								1607	MUDDY1 69.0	1	356	5.4	-1.8			14	41
1610	RIDGWAY 69.0	357	0.968	13.7	0.0	5.5	0.0										
		834	66.82		0.0	1.8	-5.9	1607	MUDDY1 69.0	1	356	-5.2	1.6			7	80
								1608	MUDDY3 69.0	1	356	-7.1	0.5			18	41
								1616	SHWNE TP69.0	1	357	0.2	0.0			1	41
								1618	MTR: KU 69.0	1	356	6.6	1.9				
1612	N HVN TP69.0	356	0.968	13.7	0.0	0.0	0.0										
		834	66.82		0.0	0.0	0.0	1607	MUDDY1 69.0	1	356	-0.1	-0.1			0	41
								1613	NEWHAVEN69.0	1	356	1.9	0.4			3	67
								1618	MTR: KU 69.0	1	356	-1.8	-0.4			5	41
1614	NEWHAVEN12.5	356	0.975	-19.0	0.0	1.9	0.0										
		834	12.15		0.0	0.5	0.0	1613	NEWHAVEN69.0	1	356	-1.9	-0.5	0.975UN	30.0UN	67	3
1616	SHWNE TP69.0	357	0.968	13.7	0.0	5.0	0.0										
		834	66.81		0.0	1.7	0.0	1610	RIDGWAY 69.0	1	357	-0.2	-0.1			1	41
								1618	MTR: KU 69.0	1	356	-4.8	-1.5			13	41
1700	HARCO S 69.0	356	1.031	22.3	0.0	0.0	0.0										
		816	71.13		0.0	0.0	0.0	30704	HARCO 138	1	356	0.0	0.0	0.975UN	-30.0UN	0	48

PTI INTERACTIVE POWER SYSTEM SIMULATOR--PSS/E TUE, JUN 05 2001 12:54
EASTERN REGIONS - 2001 SUMMER OPERATING GUIDE
MUDDY SOURCE -10 MW, 4.3 MVAR AT COAL MINE

BUS DATA								LINE DATA									
FROM BUS	NAME	AREA ZONE	VOLT PU/KV	ANGLE	GEN MW/MVAR	LOAD MW/MVAR	SHUNT MW/MVAR	TO BUS	NAME	CKT	AREA	MW	MVAR	TRANSFORMER RATIO	TRANSFORMER ANGLE	RATING A %I	RATING A MVA
1600	MUDDY 69.0	356	1.009	15.6	0.0	0.0	0.0										
		834	69.64		0.0	0.0	0.0	1603	ELDOEMER69.0	1	356	0.0	-0.2			0	57
								1605	ELDONTAP69.0	1	356	37.6	4.5			80	47
								31289	MUDDY 138	1	356	-37.6	-4.3	0.975UN	-30.0UN	67	56
1605	ELDONTAP69.0	356	0.996	14.6	0.0	0.0	0.0										
		834	68.71		0.0	0.0	0.0	1600	MUDDY 69.0	1	356	-37.2	-4.0			80	47
								1604	ELDORADO69.0	1	357	14.6	4.8			36	43
								1606	MUDDY2 69.0	1	356	11.3	-0.4			28	41
								1608	MUDDY3 69.0	1	356	11.3	-0.4			28	41
1604	ELDORADO69.0	357	0.989	14.3	0.0	14.5	0.0										
		834	68.22		0.0	4.8	0.0	1605	ELDONTAP69.0	1	356	-14.5	-4.8			36	43
5000	BBTAP 69.0	356	0.992	14.2	0.0	10.0	0.0										
		834	68.42		0.0	6.2	-4.2	1606	MUDDY2 69.0	1	356	-15.4	-0.4			38	41
								1607	MUDDY1 69.0	1	356	5.4	-1.6			14	41
1610	RIDGWAY 69.0	357	0.989	13.8	0.0	5.5	0.0										
		834	68.25		0.0	1.8	-6.2	1607	MUDDY1 69.0	1	356	-5.2	1.4			7	80
								1608	MUDDY3 69.0	1	356	-7.1	1.1			18	41
								1616	SHWNE TP69.0	1	357	0.2	0.0			1	41
								1618	MTR: KU 69.0	1	356	6.6	1.9				
1612	N HVN TP69.0	356	0.989	13.8	0.0	0.0	0.0										
		834	68.25		0.0	0.0	0.0	1607	MUDDY1 69.0	1	356	-0.1	-0.1			0	41
								1613	NEWHAVEN69.0	1	356	1.9	0.4			3	67
								1618	MTR: KU 69.0	1	356	-1.8	-0.4			5	41
1614	NEWHAVEN12.5	356	0.996	-18.9	0.0	1.9	0.0										
		834	12.42		0.0	0.5	0.0	1613	NEWHAVEN69.0	1	356	-1.9	-0.5	0.975UN	30.0UN	66	3
1616	SHWNE TP69.0	357	0.989	13.8	0.0	5.0	0.0										
		834	68.24		0.0	1.7	0.0	1610	RIDGWAY 69.0	1	357	-0.2	-0.1			1	41
								1618	MTR: KU 69.0	1	356	-4.8	-1.5			12	41
1700	HARCO S 69.0	356	1.033	22.3	0.0	0.0	0.0										
		816	71.25		0.0	0.0	0.0	30704	HARCO 138	1	356	0.0	0.0	0.975UN	-30.0UN	0	48

PTI INTERACTIVE POWER SYSTEM SIMULATOR--PSS/E TUE, JUN 05 2001 9:25
EASTERN REGIONS - 2001 SUMMER OPERATING GUIDE
MUDDY SOURCE - COAL MINE AT 15 MW

BUS DATA								LINE DATA											
FROM BUS	NAME	AREA ZONE	VOLT PU/KV	ANGLE	GEN MW/MVAR	LOAD MW/MVAR	SHUNT MW/MVAR	TO BUS	NAME	CKT	AREA	MW	MVAR	TRANSFORMER RATIO	TRANSFORMER ANGLE	RATING A %I	RATING A MVA
1600	MUDDY 69.0	356	0.999	14.5	0.0	0.0	0.0										
		834	68.96		0.0	0.0	-6.3	1603	ELDOEMER69.0	1	356	0.0	-0.2			0	57
								1605	ELDONTAP69.0	1	356	42.9	12.5			95	47
								31289	MUDDY 138	1	356	-42.9	-6.0	0.975UN	-30.0UN	77	56
1605	ELDONTAP69.0	356	0.980	13.5	0.0	0.0	0.0										
		834	67.64		0.0	0.0	0.0	1600	MUDDY 69.0	1	356	-42.2	-11.7			95	47
								1604	ELDORADO69.0	1	357	14.6	4.8			36	43
								1606	MUDDY2 69.0	1	356	13.9	3.5			36	41
								1608	MUDDY3 69.0	1	356	13.8	3.5			35	41
1604	ELDORADO69.0	357	0.973	13.1	0.0	14.5	0.0										
		834	67.15		0.0	4.8	0.0	1605	ELDONTAP69.0	1	356	-14.5	-4.8			36	43
5000	BBTAP 69.0	356	0.972	13.1	0.0	15.0	0.0										
		834	67.09		0.0	9.3	0.0	1606	MUDDY2 69.0	1	356	-19.9	-7.2			53	41
								1607	MUDDY1 69.0	1	356	4.9	-2.1			13	41
1610	RIDGWAY 69.0	357	0.971	12.6	0.0	5.5	0.0										
		834	66.99		0.0	1.8	-5.9	1607	MUDDY1 69.0	1	356	-4.8	1.9			7	80
								1608	MUDDY3 69.0	1	356	-7.6	0.3			19	41
								1616	SHWNE TP69.0	1	357	0.2	0.0			1	41
								1618	MTR: KU 69.0	1	356	6.6	1.9				
1612	N HVN TP69.0	356	0.971	12.6	0.0	0.0	0.0										
		834	66.98		0.0	0.0	0.0	1607	MUDDY1 69.0	1	356	-0.1	-0.1			0	41
								1613	NEWHAVEN69.0	1	356	1.9	0.4			3	67
								1618	MTR: KU 69.0	1	356	-1.8	-0.4			5	41
1614	NEWHAVEN12.5	356	0.977	-20.1	0.0	1.9	0.0										
		834	12.18		0.0	0.5	0.0	1613	NEWHAVEN69.0	1	356	-1.9	-0.5	0.975UN	30.0UN	67	3
1616	SHWNE TP69.0	357	0.971	12.6	0.0	5.0	0.0										
		834	66.98		0.0	1.7	0.0	1610	RIDGWAY 69.0	1	357	-0.2	-0.1			1	41
								1618	MTR: KU 69.0	1	356	-4.8	-1.5			13	41
1700	HARCO S 69.0	356	1.031	22.2	0.0	0.0	0.0										
		816	71.15		0.0	0.0	0.0	30704	HARCO 138	1	356	0.0	0.0	0.975UN	-30.0UN	0	48

PTI INTERACTIVE POWER SYSTEM SIMULATOR--PSS/E TUE, JUN 05 2001 12:50
EASTERN REGIONS - 2001 SUMMER OPERATING GUIDE
MUDDY SOURCE, 15 MW, 4.3 MVAR CAP AT COAL MINE

BUS DATA								LINE DATA									
FROM BUS	NAME	AREA ZONE	VOLT PU/KV	ANGLE	GEN MW/MVAR	LOAD MW/MVAR	SHUNT MW/MVAR	TO BUS	NAME	CKT	MW	MVAR	TRANSFORMER RATIO	TRANSFORMER ANGLE	AMPS	%I	RATING SET A
1600	MUDDY 69.0	356	1.017	14.6	0.0	0.0	0.0										
		834	70.19		0.0	0.0	-6.5	1603	ELDOEMER69.0	1	0.0	-0.2			1	0	477A
								1605	ELDONTAP69.0	1	42.8	7.7			358	91	393A
								31289	MUDDY 138	1	-42.8	-1.0	0.975UN	-30.0UN	352	75	56M
1605	ELDONTAP69.0	356	1.001	13.6	0.0	0.0	0.0										
		834	69.05		0.0	0.0	0.0	1600	MUDDY 69.0	1	-42.2	-7.1			358	91	393A
								1604	ELDORADO69.0	1	14.6	4.8			128	36	360A
								1606	MUDDY2 69.0	1	13.8	1.2			116	34	343A
								1608	MUDDY3 69.0	1	13.8	1.1			116	34	343A
1604	ELDORADO69.0	357	0.994	13.2	0.0	14.5	0.0										
		834	68.57		0.0	4.8	0.0	1605	ELDONTAP69.0	1	-14.5	-4.8			128	36	360A
5000	BBTAP 69.0	356	0.994	13.1	0.0	15.0	0.0										
		834	68.62		0.0	9.3	-4.3	1606	MUDDY2 69.0	1	-19.9	-3.2			169	49	343A
								1607	MUDDY1 69.0	1	4.9	-1.9			44	13	343A
1610	RIDGWAY 69.0	357	0.993	12.7	0.0	5.5	0.0										
		834	68.50		0.0	1.8	-6.2	1607	MUDDY1 69.0	1	-4.8	1.7			43	6	669A
								1608	MUDDY3 69.0	1	-7.6	0.8			64	19	343A
								1616	SHWNE TP69.0	1	0.2	0.0			2	1	343A
								1618	MTR: KU 69.0	1	6.6	1.9			58		
1612	N HVN TP69.0	356	0.993	12.7	0.0	0.0	0.0										
		834	68.50		0.0	0.0	0.0	1607	MUDDY1 69.0	1	-0.1	-0.1			1	0	343A
								1613	NEWHAVEN69.0	1	1.9	0.4			17	3	561A
								1618	MTR: KU 69.0	1	-1.8	-0.4			16	5	343A
1614	NEWHAVEN12.5	356	1.000	-19.9	0.0	1.9	0.0										
		834	12.47		0.0	0.5	0.0	1613	NEWHAVEN69.0	1	-1.9	-0.5	0.975UN	30.0UN	91	65	3M
1616	SHWNE TP69.0	357	0.993	12.7	0.0	5.0	0.0										
		834	68.49		0.0	1.7	0.0	1610	RIDGWAY 69.0	1	-0.2	-0.1			2	1	343A
								1618	MTR: KU 69.0	1	-4.8	-1.5			42	12	343A
1700	HARCO S 69.0	356	1.033	22.2	0.0	0.0	0.0										
		816	71.28		0.0	0.0	0.0	30704	HARCO 138	1	0.0	0.0	0.975UN	-30.0UN	0	0	48M

PTI INTERACTIVE POWER SYSTEM SIMULATOR--PSS/E MON, JUN 04 2001 15:12
EASTERN REGIONS - 2001 SUMMER OPERATING GUIDE
HARCO SOURCE/MUDDY OUT-COAL MINE OFF

BUS DATA								LINE DATA									
FROM BUS	NAME	AREA ZONE	VOLT PU/KV	ANGLE	GEN MW/MVAR	LOAD MW/MVAR	SHUNT MW/MVAR	TO BUS	NAME	CKT	AREA	MW	MVAR	TRANSFORMER RATIO	TRANSFORMER ANGLE	RATING A %I	RATING A MVA
1600	MUDDY 69.0	356	1.000	15.8	0.0	0.0	0.0										
		834	69.01		0.0	0.0	0.0	1603	ELDOEMER69.0	1	356	0.0	-0.2			0	57
								1605	ELDONTAP69.0	1	356	27.3	2.1			58	47
								1700	HARCO S 69.0	1	356	-27.3	-1.9			57	48
1605	ELDONTAP69.0	356	0.991	15.0	0.0	0.0	0.0										
		834	68.37		0.0	0.0	0.0	1600	MUDDY 69.0	1	356	-27.1	-2.0			58	47
								1604	ELDORADO69.0	1	357	14.6	4.8			36	43
								1606	MUDDY2 69.0	1	356	6.3	-1.4			16	41
								1608	MUDDY3 69.0	1	356	6.3	-1.4			16	41
1604	ELDORADO69.0	357	0.984	14.7	0.0	14.5	0.0										
		834	67.88		0.0	4.8	0.0	1605	ELDONTAP69.0	1	356	-14.5	-4.8			36	43
5000	BBTAP 69.0	356	0.990	14.8	0.0	0.0	0.0										
		834	68.28		0.0	0.0	0.0	1606	MUDDY2 69.0	1	356	-6.3	1.3			16	41
								1607	MUDDY1 69.0	1	356	6.3	-1.3			16	41
1610	RIDGWAY 69.0	357	0.986	14.3	0.0	5.5	0.0										
		834	68.04		0.0	1.8	-6.1	1607	MUDDY1 69.0	1	356	-6.1	1.2			8	80
								1608	MUDDY3 69.0	1	356	-6.2	1.2			16	41
								1616	SHWNE TP69.0	1	357	0.2	0.0			1	41
								1618	MTR: KU 69.0	1	356	6.6	1.9				
1612	N HVN TP69.0	356	0.986	14.3	0.0	0.0	0.0										
		834	68.04		0.0	0.0	0.0	1607	MUDDY1 69.0	1	356	-0.1	-0.1			0	41
								1613	NEWHAVEN69.0	1	356	1.9	0.4			3	67
								1618	MTR: KU 69.0	1	356	-1.8	-0.4			5	41
1614	NEWHAVEN12.5	356	0.993	-18.4	0.0	1.9	0.0										
		834	12.38		0.0	0.5	0.0	1613	NEWHAVEN69.0	1	356	-1.9	-0.5	0.975UN	30.0UN	66	3
1616	SHWNE TP69.0	357	0.986	14.3	0.0	5.0	0.0										
		834	68.03		0.0	1.7	0.0	1610	RIDGWAY 69.0	1	357	-0.2	-0.1			1	41
								1618	MTR: KU 69.0	1	356	-4.8	-1.5			12	41
1700	HARCO S 69.0	356	1.019	17.9	0.0	0.0	0.0										
		816	70.28		0.0	0.0	0.0	1600	MUDDY 69.0	1	356	27.8	2.8			57	48
								30704	HARCO 138	1	356	-27.8	-2.8	0.975UN	-30.0UN	57	48

PTI INTERACTIVE POWER SYSTEM SIMULATOR--PSS/E MON, JUN 04 2001 15:14
EASTERN REGIONS - 2001 SUMMER OPERATING GUIDE
HARCO SOURCE / MUDDY OUT - COAL MINE 10 MW ON

BUS DATA								LINE DATA									
FROM BUS	NAME	AREA ZONE	VOLT PU/KV	ANGLE	GEN MW/MVAR	LOAD MW/MVAR	SHUNT MW/MVAR	TO BUS	NAME	CKT	AREA	MW	MVAR	TRANSFORMER RATIO	TRANSFORMER ANGLE	RATING A %I	RATING A MVA
1600	MUDDY 69.0	356	1.005	13.0	0.0	0.0	0.0										
		834	69.34		0.0	0.0	-6.4	1603	ELDOEMER69.0	1	356	0.0	-0.2			0	57
								1605	ELDONTAP69.0	1	356	37.6	8.8			82	47
								1700	HARCO S 69.0	1	356	-37.6	-2.3			78	48
1605	ELDONTAP69.0	356	0.989	12.1	0.0	0.0	0.0										
		834	68.26		0.0	0.0	0.0	1600	MUDDY 69.0	1	356	-37.2	-8.4			82	47
								1604	ELDORADO69.0	1	357	14.6	4.8			36	43
								1606	MUDDY2 69.0	1	356	11.3	1.8			28	41
								1608	MUDDY3 69.0	1	356	11.3	1.8			28	41
1604	ELDORADO69.0	357	0.982	11.8	0.0	14.5	0.0										
		834	67.77		0.0	4.8	0.0	1605	ELDONTAP69.0	1	356	-14.5	-4.8			36	43
5000	BBTAP 69.0	356	0.984	11.8	0.0	10.0	0.0										
		834	67.86		0.0	6.2	0.0	1606	MUDDY2 69.0	1	356	-15.4	-4.3			40	41
								1607	MUDDY1 69.0	1	356	5.4	-1.9			14	41
1610	RIDGWAY 69.0	357	0.981	11.3	0.0	5.5	0.0										
		834	67.72		0.0	1.8	-6.1	1607	MUDDY1 69.0	1	356	-5.2	1.7			7	80
								1608	MUDDY3 69.0	1	356	-7.1	0.6			18	41
								1616	SHWNE TP69.0	1	357	0.2	0.0			1	41
								1618	MTR: KU 69.0	1	356	6.6	1.9				
1612	N HVN TP69.0	356	0.981	11.3	0.0	0.0	0.0										
		834	67.72		0.0	0.0	0.0	1607	MUDDY1 69.0	1	356	-0.1	-0.1			0	41
								1613	NEWHAVEN69.0	1	356	1.9	0.4			3	67
								1618	MTR: KU 69.0	1	356	-1.8	-0.4			5	41
1614	NEWHAVEN12.5	356	0.988	-21.4	0.0	1.9	0.0										
		834	12.32		0.0	0.5	0.0	1613	NEWHAVEN69.0	1	356	-1.9	-0.5	0.975UN	30.0UN	66	3
1616	SHWNE TP69.0	357	0.981	11.3	0.0	5.0	0.0										
		834	67.71		0.0	1.7	0.0	1610	RIDGWAY 69.0	1	357	-0.2	-0.1			1	41
								1618	MTR: KU 69.0	1	356	-4.8	-1.5			12	41
1700	HARCO S 69.0	356	1.030	16.0	0.0	0.0	0.0										
		816	71.07		0.0	0.0	-6.7	1600	MUDDY 69.0	1	356	38.4	4.1			78	48
								30704	HARCO 138	1	356	-38.4	2.6	0.975UN	-30.0UN	78	48

PTI INTERACTIVE POWER SYSTEM SIMULATOR--PSS/E TUE, JUN 05 2001 7:43
EASTERN REGIONS - 2001 SUMMER OPERATING GUIDE
HARCO SOURCE/ MUDDY OUT - COAL MINE 15 MW'S

BUS DATA								LINE DATA									
FROM BUS	NAME	AREA ZONE	VOLT PU/KV	ANGLE	GEN MW/MVAR	LOAD MW/MVAR	SHUNT MW/MVAR	TO BUS	NAME	CKT	AREA	MW	MVAR	TRANSFORMER RATIO	TRANSFORMER ANGLE	RATING A %I	RATING A MVA
1600	MUDDY 69.0	356	0.970	11.4	0.0	0.0	0.0										
		834	66.95		0.0	0.0	-5.9	1603	ELDOEMER69.0	1	356	0.0	-0.2			0	57
								1605	ELDONTAP69.0	1	356	42.9	13.0			98	47
								1700	HARCO S 69.0	1	356	-42.9	-6.9			93	48
1605	ELDONTAP69.0	356	0.950	10.3	0.0	0.0	0.0										
		834	65.56		0.0	0.0	0.0	1600	MUDDY 69.0	1	356	-42.3	-12.2			98	47
								1604	ELDORADO69.0	1	357	14.6	4.8			38	43
								1606	MUDDY2 69.0	1	356	13.9	3.7			37	41
								1608	MUDDY3 69.0	1	356	13.8	3.7			37	41
1604	ELDORADO69.0	357	0.943	9.9	0.0	14.5	0.0										
		834	65.05		0.0	4.8	0.0	1605	ELDONTAP69.0	1	356	-14.5	-4.8			38	43
5000	BBTAP 69.0	356	0.942	9.9	0.0	15.0	0.0										
		834	64.98		0.0	9.3	0.0	1606	MUDDY2 69.0	1	356	-19.9	-7.4			55	41
								1607	MUDDY1 69.0	1	356	4.9	-1.9			14	41
1610	RIDGWAY 69.0	357	0.940	9.4	0.0	5.5	0.0										
		834	64.86		0.0	1.8	-5.6	1607	MUDDY1 69.0	1	356	-4.8	1.7			7	80
								1608	MUDDY3 69.0	1	356	-7.6	0.1			20	41
								1616	SHWNE TP69.0	1	357	0.2	0.0			1	41
								1618	MTR: KU 69.0	1	356	6.6	1.9				
1612	N HVN TP69.0	356	0.940	9.4	0.0	0.0	0.0										
		834	64.86		0.0	0.0	0.0	1607	MUDDY1 69.0	1	356	-0.1	-0.1			0	41
								1613	NEWHAVEN69.0	1	356	1.9	0.5			3	67
								1618	MTR: KU 69.0	1	356	-1.8	-0.4			5	41
1614	NEWHAVEN12.5	356	0.945	-23.5	0.0	1.9	0.0										
		834	11.78		0.0	0.5	0.0	1613	NEWHAVEN69.0	1	356	-1.9	-0.5	0.975UN	30.0UN	69	3
1616	SHWNE TP69.0	357	0.940	9.4	0.0	5.0	0.0										
		834	64.85		0.0	1.7	0.0	1610	RIDGWAY 69.0	1	357	-0.2	-0.1			1	41
								1618	MTR: KU 69.0	1	356	-4.8	-1.5			13	41
1700	HARCO S 69.0	356	1.007	14.8	0.0	0.0	0.0										
		816	69.45		0.0	0.0	-6.4	1600	MUDDY 69.0	1	356	44.0	9.6			93	48
								30704	HARCO 138	1	356	-44.0	-3.2	0.975UN	-30.0UN	91	48

PTI INTERACTIVE POWER SYSTEM SIMULATOR--PSS/E TUE, JUN 05 2001 8:26
EASTERN REGIONS - 2001 SUMMER OPERATING GUIDE
MUDDY SOURCE- NORRIS TX OUT/- COAL MINE OFF

BUS DATA								LINE DATA									
FROM BUS	NAME	AREA ZONE	VOLT PU/KV	ANGLE	GEN MW/MVAR	LOAD MW/MVAR	SHUNT MW/MVAR	TO BUS	NAME	CKT	AREA	MW	MVAR	TRANSFORMER RATIO	TRANSFORMER ANGLE	RATING A %I	RATING A MVA
1600	MUDDY 69.0	356	1.002	14.8	0.0	0.0	0.0										
		834	69.13		0.0	0.0	0.0	1603	ELDOEMER69.0	1	356	14.4	3.6			26	57
								1605	ELDONTAP69.0	1	356	27.3	2.1			58	47
								31289	MUDDY 138	1	356	-41.7	-5.7	0.975UN	-30.0UN	75	56
1605	ELDONTAP69.0	356	0.993	14.0	0.0	0.0	0.0										
		834	68.49		0.0	0.0	0.0	1600	MUDDY 69.0	1	356	-27.1	-2.0			58	47
								1604	ELDORADO69.0	1	357	14.6	4.8			36	43
								1606	MUDDY2 69.0	1	356	6.3	-1.4			16	41
								1608	MUDDY3 69.0	1	356	6.3	-1.4			16	41
1604	ELDORADO69.0	357	0.985	13.7	0.0	14.5	0.0										
		834	68.00		0.0	4.8	0.0	1605	ELDONTAP69.0	1	356	-14.5	-4.8			36	43
5000	BBTAP 69.0	356	0.991	13.8	0.0	0.0	0.0										
		834	68.40		0.0	0.0	0.0	1606	MUDDY2 69.0	1	356	-6.3	1.4			16	41
								1607	MUDDY1 69.0	1	356	6.3	-1.4			16	41
1610	RIDGWAY 69.0	357	0.988	13.3	0.0	5.5	0.0										
		834	68.16		0.0	1.8	-6.1	1607	MUDDY1 69.0	1	356	-6.1	1.2			8	80
								1608	MUDDY3 69.0	1	356	-6.2	1.2			16	41
								1616	SHWNE TP69.0	1	357	0.2	0.0			1	41
								1618	MTR: KU 69.0	1	356	6.6	1.9				
1612	N HVN TP69.0	356	0.988	13.3	0.0	0.0	0.0										
		834	68.16		0.0	0.0	0.0	1607	MUDDY1 69.0	1	356	-0.1	-0.1			0	41
								1613	NEWHAVEN69.0	1	356	1.9	0.4			3	67
								1618	MTR: KU 69.0	1	356	-1.8	-0.4			5	41
1614	NEWHAVEN12.5	356	0.995	-19.4	0.0	1.9	0.0										
		834	12.41		0.0	0.5	0.0	1613	NEWHAVEN69.0	1	356	-1.9	-0.5	0.975UN	30.0UN	66	3
1616	SHWNE TP69.0	357	0.988	13.3	0.0	5.0	0.0										
		834	68.15		0.0	1.7	0.0	1610	RIDGWAY 69.0	1	357	-0.2	-0.1			1	41
								1618	MTR: KU 69.0	1	356	-4.8	-1.5			12	41
1700	HARCO S 69.0	356	1.032	22.2	0.0	0.0	0.0										
		816	71.20		0.0	0.0	0.0	30704	HARCO 138	1	356	0.0	0.0	0.975UN	-30.0UN	0	48
1665	NORRISCY69.0	356	0.973	12.3	0.0	0.0	0.0										
		838	67.13		0.0	0.0	0.0	1603	ELDOEMER69.0	1	356	-14.1	-3.5			26	57
								1660	WWC NORS69.0	1	356	10.0	4.0			17	67
								1666	NORRISCY12.5	1	356	4.1	-0.5	1.000LK	30.0LK	71	6

```
1666 NORRISCY12.5 356  0.982  -21.0      0.0      4.1      0.0 ------------------------------------------------------------------------
                  838  12.25             0.0      0.9     -1.7  1665 NORRISCY69.0  1  356     -4.1    0.8  1.000UN  30.0UN  71    6

1660 WWC NORS69.0 356  0.973   12.3      0.0      3.7      0.0 ------------------------------------------------------------------------
                  838  67.12             0.0      1.2      0.0  1657 TEXAS E 69.0  1  356      6.4    2.8                   11   67
                                                                 1665 NORRISCY69.0  1  356    -10.0   -4.0                   17   67
1657 TEXAS E 69.0 356  0.972   12.3      0.0      5.6      0.0 ------------------------------------------------------------------------
                  838  67.10             0.0      2.8      0.0  1655 NORRISNJ69.0  1  356      0.8    0.0                    1   67
                                                                 1660 WWC NORS69.0  1  356     -6.4   -2.8                   11   67
1671 NORRISNE12.5 356  0.996  -18.2      0.0      0.8      0.0 ------------------------------------------------------------------------
                  838  12.42             0.0      0.1      0.0  1670 NORRISNE69.0  1  356     -0.8   -0.1  0.975UN  30.0UN   8   11
```

PTI INTERACTIVE POWER SYSTEM SIMULATOR--PSS/E TUE, JUN 05 2001 8:29
EASTERN REGIONS - 2001 SUMMER OPERATING GUIDE
MUDDY SOURCE - NORRIS TX OUT / - COAL MINE 10 MW'S

BUS DATA								LINE DATA									
FROM BUS	NAME	AREA ZONE	VOLT PU/KV	ANGLE	GEN MW/MVAR	LOAD MW/MVAR	SHUNT MW/MVAR	TO BUS	NAME	CKT	AREA	MW	MVAR	TRANSFORMER RATIO	TRANSFORMER ANGLE	RATING %I	RATING A MVA
1600	MUDDY 69.0	356	0.990	12.6	0.0	0.0	0.0										
		834	68.33		0.0	0.0	-6.2	1603	ELDOEMER69.0	1	356	14.4	3.7			26	57
								1605	ELDONTAP69.0	1	356	37.7	9.1			83	47
								31289	MUDDY 138	1	356	-52.1	-6.6	0.975UN	-30.0UN	94	56
1605	ELDONTAP69.0	356	0.974	11.7	0.0	0.0	0.0										
		834	67.22		0.0	0.0	0.0	1600	MUDDY 69.0	1	356	-37.2	-8.6			83	47
								1604	ELDORADO69.0	1	357	14.6	4.8			37	43
								1606	MUDDY2 69.0	1	356	11.3	1.9			29	41
								1608	MUDDY3 69.0	1	356	11.3	1.9			29	41
1604	ELDORADO69.0	357	0.967	11.3	0.0	14.5	0.0										
		834	66.72		0.0	4.8	0.0	1605	ELDONTAP69.0	1	356	-14.5	-4.8			37	43
1610	RIDGWAY 69.0	357	0.966	10.9	0.0	5.5	0.0										
		834	66.66		0.0	1.8	-5.9	1607	MUDDY1 69.0	1	356	-5.2	1.6			7	80
								1608	MUDDY3 69.0	1	356	-7.1	0.5			18	41
								1616	SHWNE TP69.0	1	357	0.2	0.0			1	41
								1618	MTR: KU 69.0	1	356	6.6	1.9				
1612	N HVN TP69.0	356	0.966	10.9	0.0	0.0	0.0										
		834	66.66		0.0	0.0	0.0	1607	MUDDY1 69.0	1	356	-0.1	-0.1			0	41
								1613	NEWHAVEN69.0	1	356	1.9	0.4			3	67
								1618	MTR: KU 69.0	1	356	-1.8	-0.4			5	41
1614	NEWHAVEN12.5	356	0.972	-21.9	0.0	1.9	0.0										
		834	12.12		0.0	0.5	0.0	1613	NEWHAVEN69.0	1	356	-1.9	-0.5	0.975UN	30.0UN	67	3
5000	BBTAP 69.0	356	0.968	11.4	0.0	10.0	0.0										
		834	66.82		0.0	6.2	0.0	1606	MUDDY2 69.0	1	356	-15.4	-4.4			40	41
								1607	MUDDY1 69.0	1	356	5.4	-1.8			14	41
1616	SHWNE TP69.0	357	0.966	10.9	0.0	5.0	0.0										
		834	66.65		0.0	1.7	0.0	1610	RIDGWAY 69.0	1	357	-0.2	-0.1			1	41
								1618	MTR: KU 69.0	1	356	-4.8	-1.5			13	41
1700	HARCO S 69.0	356	1.030	22.0	0.0	0.0	0.0										
		816	71.04		0.0	0.0	0.0	30704	HARCO 138	1	356	0.0	0.0	0.975UN	-30.0UN	0	48
1650	NORRIS N69.0	356	0.974	14.4	0.0	12.5	0.0										
		838	67.23		0.0	7.8	-6.0	1675	BROWNSVJ69.0	1	356	-12.5	-1.8			27	48

1665 NORRISCY69.0	356	0.961	10.1	0.0	0.0	0.0	1603 ELDOEMER69.0	1	356	-14.1	-3.5			27	57
	838	66.30		0.0	0.0	0.0	1660 WWC NORS69.0	1	356	10.0	4.0			17	67
							1666 NORRISCY12.5	1	356	4.1	-0.5	1.000LK	30.0LK	72	6
1666 NORRISCY12.5	356	0.970	-23.3	0.0	4.1	0.0									
	838	12.09		0.0	0.9	-1.7	1665 NORRISCY69.0	1	356	-4.1	0.7	1.000UN	30.0UN	72	6
1660 WWC NORS69.0	356	0.961	10.1	0.0	3.7	0.0									
	838	66.29		0.0	1.2	0.0	1657 TEXAS E 69.0	1	356	6.3	2.8			11	67
							1665 NORRISCY69.0	1	356	-10.0	-4.0			17	67
1657 TEXAS E 69.0	356	0.960	10.1	0.0	5.6	0.0									
	838	66.26		0.0	2.8	0.0	1655 NORRISNJ69.0	1	356	0.8	0.0			1	67
							1660 WWC NORS69.0	1	356	-6.3	-2.8			11	67
1671 NORRISNE12.5	356	0.984	-20.4	0.0	0.8	0.0									
	838	12.27		0.0	0.1	0.0	1670 NORRISNE69.0	1	356	-0.8	-0.1	0.975UN	30.0UN	8	11

PTI INTERACTIVE POWER SYSTEM SIMULATOR--PSS/E THU, JUN 07 2001 13:31
EASTERN REGIONS - 2001 SUMMER OPERATING GUIDE
MUDDY SOURCE - NORRIS TX OUT / - COAL MINE 10 MW'S, 4.3 MVAR CAP

BUS DATA								LINE DATA									
FROM BUS	NAME	AREA ZONE	VOLT PU/KV	ANGLE	GEN MW/MVAR	LOAD MW/MVAR	SHUNT MW/MVAR	TO BUS	NAME	CKT	AREA	MW	MVAR	TRANSFORMER RATIO	TRANSFORMER ANGLE	RATING A %I	RATING A MVA
1600	MUDDY 69.0	356	1.009	12.8	0.0	0.0	0.0										
		834	69.59		0.0	0.0	-6.4	1603	ELDOEMER69.0	1	356	14.4	3.6			26	57
								1605	ELDONTAP69.0	1	356	37.6	4.5			80	47
								31289	MUDDY 138	1	356	-52.0	-1.6	0.975UN	-30.0UN	92	56
1605	ELDONTAP69.0	356	0.995	11.8	0.0	0.0	0.0										
		834	68.66		0.0	0.0	0.0	1600	MUDDY 69.0	1	356	-37.2	-4.0			80	47
								1604	ELDORADO69.0	1	357	14.6	4.8			36	43
								1606	MUDDY2 69.0	1	356	11.3	-0.4			28	41
								1608	MUDDY3 69.0	1	356	11.3	-0.4			28	41
1604	ELDORADO69.0	357	0.988	11.5	0.0	14.5	0.0										
		834	68.18		0.0	4.8	0.0	1605	ELDONTAP69.0	1	356	-14.5	-4.8			36	43
5000	BBTAP 69.0	356	0.991	11.4	0.0	10.0	0.0										
		834	68.38		0.0	6.2	-4.2	1606	MUDDY2 69.0	1	356	-15.4	-0.4			38	41
								1607	MUDDY1 69.0	1	356	5.4	-1.5			14	41
1610	RIDGWAY 69.0	357	0.989	11.0	0.0	5.5	0.0										
		834	68.21		0.0	1.8	-6.2	1607	MUDDY1 69.0	1	356	-5.2	1.4			7	80
								1608	MUDDY3 69.0	1	356	-7.1	1.1			18	41
								1616	SHWNE TP69.0	1	357	0.2	0.0			1	41
								1618	MTR: KU 69.0	1	356	6.6	1.9				
1612	N HVN TP69.0	356	0.988	11.0	0.0	0.0	0.0										
		834	68.20		0.0	0.0	0.0	1607	MUDDY1 69.0	1	356	-0.1	-0.1			0	41
								1613	NEWHAVEN69.0	1	356	1.9	0.4			3	67
								1618	MTR: KU 69.0	1	356	-1.8	-0.4			5	41
1614	NEWHAVEN12.5	356	0.995	-21.7	0.0	1.9	0.0										
		834	12.41		0.0	0.5	0.0	1613	NEWHAVEN69.0	1	356	-1.9	-0.5	0.975UN	30.0UN	66	3
1616	SHWNE TP69.0	357	0.988	11.0	0.0	5.0	0.0										
		834	68.20		0.0	1.7	0.0	1610	RIDGWAY 69.0	1	357	-0.2	-0.1			1	41
								1618	MTR: KU 69.0	1	356	-4.8	-1.5			12	41
1700	HARCO S 69.0	356	1.031	22.0	0.0	0.0	0.0										
		816	71.17		0.0	0.0	0.0	30704	HARCO 138	1	356	0.0	0.0	0.975UN	-30.0UN	0	48
1650	NORRIS N69.0	356	0.975	14.5	0.0	12.5	0.0										
		838	67.29		0.0	7.8	-6.0	1675	BROWNSVJ69.0	1	356	-12.5	-1.8			27	48

1665 NORRISCY69.0	356	0.980	10.4	0.0	0.0	0.0	----------									
	838	67.62		0.0	0.0	0.0	1603 ELDOEMER69.0	1	356	-14.1	-3.4			26	57
							1660 WWC NORS69.0	1	356	10.0	4.0			16	67
							1666 NORRISCY12.5	1	356	4.1	-0.6	1.000LK	30.0LK	71	6
1666 NORRISCY12.5	356	0.990	-22.9	0.0	4.1	0.0	----------									
	838	12.34		0.0	0.9	-1.8	1665 NORRISCY69.0	1	356	-4.1	0.8	1.000UN	30.0UN	71	6
1660 WWC NORS69.0	356	0.980	10.4	0.0	3.7	0.0	----------									
	838	67.61		0.0	1.2	0.0	1657 TEXAS E 69.0	1	356	6.3	2.8			11	67
							1665 NORRISCY69.0	1	356	-10.0	-4.0			16	67
1657 TEXAS E 69.0	356	0.979	10.3	0.0	5.6	0.0	----------									
	838	67.59		0.0	2.8	0.0	1655 NORRISNJ69.0	1	356	0.8	0.0			1	67
							1660 WWC NORS69.0	1	356	-6.3	-2.8			11	67
1671 NORRISNE12.5	356	1.003	-20.1	0.0	0.8	0.0	----------									
	838	12.51		0.0	0.1	0.0	1670 NORRISNE69.0	1	356	-0.8	-0.1	0.975UN	30.0UN	8	11

PTI INTERACTIVE POWER SYSTEM SIMULATOR--PSS/E TUE, JUN 05 2001 8:22
EASTERN REGIONS - 2001 SUMMER OPERATING GUIDE
MUDDY SOURCE - NORRIS TX OUT - 15 MW COAL MINE LOAD

BUS DATA								LINE DATA										
FROM BUS	NAME	AREA ZONE	VOLT PU/KV	ANGLE	GEN MW/MVAR	LOAD MW/MVAR	SHUNT MW/MVAR	TO BUS	NAME	CKT	AREA	MW	MVAR	TRANSFORMER RATIO	TRANSFORMER ANGLE	RATING A %I	RATING A MVA
1600	MUDDY 69.0	356	0.969	11.4	0.0	0.0	0.0										
		834	66.84		0.0	0.0	-5.9	1603	ELDOEMER69.0	1	356	14.4	3.9			27	57
								1605	ELDONTAP69.0	1	356	42.9	13.0			98	47
								31289	MUDDY 138	1	356	-57.3	-11.0	0.975UN	-30.0UN	107	56
1605	ELDONTAP69.0	356	0.949	10.3	0.0	0.0	0.0										
		834	65.45		0.0	0.0	0.0	1600	MUDDY 69.0	1	356	-42.3	-12.2			99	47
								1604	ELDORADO69.0	1	357	14.6	4.8			38	43
								1606	MUDDY2 69.0	1	356	13.9	3.7			37	41
								1608	MUDDY3 69.0	1	356	13.8	3.7			37	41
1604	ELDORADO69.0	357	0.941	9.9	0.0	14.5	0.0										
		834	64.94		0.0	4.8	0.0	1605	ELDONTAP69.0	1	356	-14.5	-4.8			38	43
1610	RIDGWAY 69.0	357	0.938	9.4	0.0	5.5	0.0										
		834	64.75		0.0	1.8	-5.5	1607	MUDDY1 69.0	1	356	-4.8	1.7			7	80
								1608	MUDDY3 69.0	1	356	-7.6	0.1			20	41
								1616	SHWNE TP69.0	1	357	0.2	0.0			1	41
								1618	MTR: KU 69.0	1	356	6.6	1.9				
1612	N HVN TP69.0	356	0.938	9.4	0.0	0.0	0.0										
		834	64.74		0.0	0.0	0.0	1607	MUDDY1 69.0	1	356	-0.1	-0.1			0	41
								1613	NEWHAVEN69.0	1	356	1.9	0.5			3	67
								1618	MTR: KU 69.0	1	356	-1.8	-0.4			5	41
1614	NEWHAVEN12.5	356	0.943	-23.6	0.0	1.9	0.0										
		834	11.76		0.0	0.5	0.0	1613	NEWHAVEN69.0	1	356	-1.9	-0.5	0.975UN	30.0UN	69	3
5000	BBTAP 69.0	356	0.940	9.9	0.0	15.0	0.0										
		834	64.87		0.0	9.3	0.0	1606	MUDDY2 69.0	1	356	-19.9	-7.4			55	41
								1607	MUDDY1 69.0	1	356	4.9	-1.9			14	41
1616	SHWNE TP69.0	357	0.938	9.4	0.0	5.0	0.0										
		834	64.74		0.0	1.7	0.0	1610	RIDGWAY 69.0	1	357	-0.2	-0.1			1	41
								1618	MTR: KU 69.0	1	356	-4.8	-1.5			13	41
1700	HARCO S 69.0	356	1.027	21.9	0.0	0.0	0.0										
		816	70.84		0.0	0.0	0.0	30704	HARCO 138	1	356	0.0	0.0	0.975UN	-30.0UN	0	48
1650	NORRIS N69.0	356	0.973	14.4	0.0	12.5	0.0										
		838	67.14		0.0	7.8	-6.0	1675	BROWNSVJ69.0	1	356	-12.5	-1.8			27	48

1665 NORRISCY69.0	356	0.938	8.8	0.0	0.0	0.0	----------									
	838	64.72		0.0	0.0	0.0	1603 ELDOEMER69.0	1	356	-14.1	-3.6			27	57
							1660 WWC NORS69.0	1	356	10.0	4.0			17	67
							1666 NORRISCY12.5	1	356	4.1	-0.4	1.000LK	30.0LK	73	6
1666 NORRISCY12.5	356	0.946	-24.9	0.0	4.1	0.0	----------									
	838	11.79		0.0	0.9	-1.6	1665 NORRISCY69.0	1	356	-4.1	0.7	1.000UN	30.0UN	73	6
1660 WWC NORS69.0	356	0.938	8.8	0.0	3.7	0.0	----------									
	838	64.71		0.0	1.2	0.0	1657 TEXAS E 69.0	1	356	6.4	2.8			11	67
							1665 NORRISCY69.0	1	356	-10.0	-4.0			17	67
1657 TEXAS E 69.0	356	0.937	8.7	0.0	5.6	0.0	----------									
	838	64.68		0.0	2.8	0.0	1655 NORRISNJ69.0	1	356	0.8	0.0			1	67
							1660 WWC NORS69.0	1	356	-6.4	-2.8			11	67
1671 NORRISNE12.5	356	0.960	-21.8	0.0	0.8	0.0	----------									
	838	11.97		0.0	0.1	0.0	1670 NORRISNE69.0	1	356	-0.8	-0.1	0.975UN	30.0UN	8	11

PTI INTERACTIVE POWER SYSTEM SIMULATOR--PSS/E TUE, JUN 05 2001 13:37
EASTERN REGIONS - 2001 SUMMER OPERATING GUIDE
HARCO SOURCE - 15 MW, 4.3 MVAR AT COAL MINE - HARCO CAP ON

BUS DATA								LINE DATA									
FROM BUS	NAME	AREA ZONE	VOLT PU/KV	ANGLE	GEN MW/MVAR	LOAD MW/MVAR	SHUNT MW/MVAR	TO BUS	NAME	CKT	AREA	MW	MVAR	TRANSFORMER RATIO	TRANSFORMER ANGLE	RATING A %I	RATING A MVA
1600	MUDDY 69.0	356	0.998	11.5	0.0	0.0	0.0										
		834	68.84		0.0	0.0	-6.3	1603	ELDOEMER69.0	1	356	0.0	-0.2			0	57
								1605	ELDONTAP69.0	1	356	42.8	8.3			93	47
								1700	HARCO S 69.0	1	356	-42.8	-1.8			89	48
1605	ELDONTAP69.0	356	0.981	10.4	0.0	0.0	0.0										
		834	67.67		0.0	0.0	0.0	1600	MUDDY 69.0	1	356	-42.2	-7.6			93	47
								1604	ELDORADO69.0	1	357	14.6	4.8			36	43
								1606	MUDDY2 69.0	1	356	13.8	1.4			35	41
								1608	MUDDY3 69.0	1	356	13.8	1.4			35	41
1604	ELDORADO69.0	357	0.974	10.1	0.0	14.5	0.0										
		834	67.17		0.0	4.8	0.0	1605	ELDONTAP69.0	1	356	-14.5	-4.8			36	43
5000	BBTAP 69.0	356	0.974	10.0	0.0	15.0	0.0										
		834	67.21		0.0	9.3	-4.1	1606	MUDDY2 69.0	1	356	-19.9	-3.5			51	41
								1607	MUDDY1 69.0	1	356	4.9	-1.7			13	41
1610	RIDGWAY 69.0	357	0.972	9.5	0.0	5.5	0.0										
		834	67.08		0.0	1.8	-6.0	1607	MUDDY1 69.0	1	356	-4.8	1.6			6	80
								1608	MUDDY3 69.0	1	356	-7.6	0.7			19	41
								1616	SHWNE TP69.0	1	357	0.2	0.0			1	41
								1618	MTR: KU 69.0	1	356	6.6	1.9				
1612	N HVN TP69.0	356	0.972	9.5	0.0	0.0	0.0										
		834	67.08		0.0	0.0	0.0	1607	MUDDY1 69.0	1	356	-0.1	-0.1			0	41
								1613	NEWHAVEN69.0	1	356	1.9	0.4			3	67
								1618	MTR: KU 69.0	1	356	-1.8	-0.4			5	41
1614	NEWHAVEN12.5	356	0.978	-23.2	0.0	1.9	0.0										
		834	12.20		0.0	0.5	0.0	1613	NEWHAVEN69.0	1	356	-1.9	-0.5	0.975UN	30.0UN	67	3
1616	SHWNE TP69.0	357	0.972	9.5	0.0	5.0	0.0										
		834	67.07		0.0	1.7	0.0	1610	RIDGWAY 69.0	1	357	-0.2	-0.1			1	41
								1618	MTR: KU 69.0	1	356	-4.8	-1.5			13	41
1700	HARCO S 69.0	356	1.026	14.9	0.0	0.0	0.0										
		816	70.77		0.0	0.0	-6.6	1600	MUDDY 69.0	1	356	43.8	4.2			89	48
								30704	HARCO 138	1	356	-43.8	2.4	0.975UN	-30.0UN	89	48

PTI INTERACTIVE POWER SYSTEM SIMULATOR--PSS/E TUE, JUN 05 2001 13:02
EASTERN REGIONS - 2001 SUMMER OPERATING GUIDE
HARCO SOURCE - MUDDY OUT - - 10 MW, 4.3 MVAR CAP AT MINE

BUS DATA								LINE DATA									
FROM BUS	NAME	AREA ZONE	VOLT PU/KV	ANGLE	GEN MW/MVAR	LOAD MW/MVAR	SHUNT MW/MVAR	TO BUS	NAME	CKT	AREA	MW	MVAR	TRANSFORMER RATIO	TRANSFORMER ANGLE	RATING A %I	RATING A MVA
1600	MUDDY 69.0	356	1.002	12.8	0.0	0.0	0.0										
		834	69.17		0.0	0.0	-6.3	1603	ELDOEMER69.0	1	356	0.0	-0.2			0	57
								1605	ELDONTAP69.0	1	356	37.6	4.6			80	47
								1700	HARCO S 69.0	1	356	-37.6	1.9			78	48
1605	ELDONTAP69.0	356	0.989	11.8	0.0	0.0	0.0										
		834	68.23		0.0	0.0	0.0	1600	MUDDY 69.0	1	356	-37.2	-4.2			80	47
								1604	ELDORADO69.0	1	357	14.6	4.8			36	43
								1606	MUDDY2 69.0	1	356	11.3	-0.3			28	41
								1608	MUDDY3 69.0	1	356	11.3	-0.3			28	41
1604	ELDORADO69.0	357	0.982	11.5	0.0	14.5	0.0										
		834	67.74		0.0	4.8	0.0	1605	ELDONTAP69.0	1	356	-14.5	-4.8			36	43
5000	BBTAP 69.0	356	0.985	11.4	0.0	10.0	0.0										
		834	67.94		0.0	6.2	-4.2	1606	MUDDY2 69.0	1	356	-15.4	-0.5			38	41
								1607	MUDDY1 69.0	1	356	5.4	-1.5			14	41
1610	RIDGWAY 69.0	357	0.982	11.0	0.0	5.5	0.0										
		834	67.76		0.0	1.8	-6.1	1607	MUDDY1 69.0	1	356	-5.2	1.3			7	80
								1608	MUDDY3 69.0	1	356	-7.1	1.0			18	41
								1616	SHWNE TP69.0	1	357	0.2	0.0			1	41
								1618	MTR: KU 69.0	1	356	6.6	1.9				
1612	N HVN TP69.0	356	0.982	11.0	0.0	0.0	0.0										
		834	67.76		0.0	0.0	0.0	1607	MUDDY1 69.0	1	356	-0.1	-0.1			0	41
								1613	NEWHAVEN69.0	1	356	1.9	0.4			3	67
								1618	MTR: KU 69.0	1	356	-1.8	-0.4			5	41
1614	NEWHAVEN12.5	356	0.989	-21.7	0.0	1.9	0.0										
		834	12.33		0.0	0.5	0.0	1613	NEWHAVEN69.0	1	356	-1.9	-0.5	0.975UN	30.0UN	66	3
1616	SHWNE TP69.0	357	0.982	11.0	0.0	5.0	0.0										
		834	67.75		0.0	1.7	0.0	1610	RIDGWAY 69.0	1	357	-0.2	-0.1			1	41
								1618	MTR: KU 69.0	1	356	-4.8	-1.5			12	41
1700	HARCO S 69.0	356	1.022	15.9	0.0	0.0	0.0										
		816	70.50		0.0	0.0	0.0	1600	MUDDY 69.0	1	356	38.4	-0.1			78	48
								30704	HARCO 138	1	356	-38.4	0.1	0.975UN	-30.0UN	78	48

PTI INTERACTIVE POWER SYSTEM SIMULATOR--PSS/E TUE, JUN 05 2001 13:05
EASTERN REGIONS - 2001 SUMMER OPERATING GUIDE
HARCO SOURCE - 15 MW - 4.3 MVAR AT COAL MINE

BUS DATA								LINE DATA									
FROM BUS	NAME	AREA ZONE	VOLT PU/KV	ANGLE	GEN MW/MVAR	LOAD MW/MVAR	SHUNT MW/MVAR	TO BUS	NAME	CKT	AREA	MW	MVAR	TRANSFORMER RATIO	TRANSFORMER ANGLE	RATING A %I	RATING A MVA
1600	MUDDY 69.0	356	0.967	11.2	0.0	0.0	0.0										
		834	66.72		0.0	0.0	-5.9	1603	ELDOEMER69.0	1	356	0.0	-0.2			0	57
								1605	ELDONTAP69.0	1	356	42.9	9.1			96	47
								1700	HARCO S 69.0	1	356	-42.9	-3.1			93	48
1605	ELDONTAP69.0	356	0.949	10.0	0.0	0.0	0.0										
		834	65.48		0.0	0.0	0.0	1600	MUDDY 69.0	1	356	-42.3	-8.4			97	47
								1604	ELDORADO69.0	1	357	14.6	4.8			38	43
								1606	MUDDY2 69.0	1	356	13.9	1.8			36	41
								1608	MUDDY3 69.0	1	356	13.8	1.8			36	41
1604	ELDORADO69.0	357	0.942	9.7	0.0	14.5	0.0										
		834	64.97		0.0	4.8	0.0	1605	ELDONTAP69.0	1	356	-14.5	-4.8			38	43
5000	BBTAP 69.0	356	0.942	9.6	0.0	15.0	0.0										
		834	64.99		0.0	9.3	-3.8	1606	MUDDY2 69.0	1	356	-19.9	-4.0			53	41
								1607	MUDDY1 69.0	1	356	4.9	-1.5			13	41
1610	RIDGWAY 69.0	357	0.940	9.1	0.0	5.5	0.0										
		834	64.84		0.0	1.8	-5.6	1607	MUDDY1 69.0	1	356	-4.8	1.4			7	80
								1608	MUDDY3 69.0	1	356	-7.6	0.4			20	41
								1616	SHWNE TP69.0	1	357	0.2	0.0			1	41
								1618	MTR: KU 69.0	1	356	6.6	1.9				
1612	N HVN TP69.0	356	0.940	9.1	0.0	0.0	0.0										
		834	64.83		0.0	0.0	0.0	1607	MUDDY1 69.0	1	356	-0.1	-0.1			0	41
								1613	NEWHAVEN69.0	1	356	1.9	0.5			3	67
								1618	MTR: KU 69.0	1	356	-1.8	-0.4			5	41
1614	NEWHAVEN12.5	356	0.944	-23.9	0.0	1.9	0.0										
		834	11.78		0.0	0.5	0.0	1613	NEWHAVEN69.0	1	356	-1.9	-0.5	0.975UN	30.0UN	69	3
1616	SHWNE TP69.0	357	0.940	9.1	0.0	5.0	0.0										
		834	64.83		0.0	1.7	0.0	1610	RIDGWAY 69.0	1	357	-0.2	-0.1			1	41
								1618	MTR: KU 69.0	1	356	-4.8	-1.5			13	41
1700	HARCO S 69.0	356	0.998	14.8	0.0	0.0	0.0										
		816	68.85		0.0	0.0	0.0	1600	MUDDY 69.0	1	356	44.0	5.7			93	48
								30704	HARCO 138	1	356	-44.0	-5.7	0.975UN	-30.0UN	93	48

PTI INTERACTIVE POWER SYSTEM SIMULATOR--PSS/E TUE, JUN 05 2001 13:11
EASTERN REGIONS - 2001 SUMMER OPERATING GUIDE
HARCO SOURCE - 15 MW , 9.3 MVAR AT COAL MINE

BUS DATA								LINE DATA									
FROM BUS	NAME	AREA ZONE	VOLT PU/KV	ANGLE	GEN MW/MVAR	LOAD MW/MVAR	SHUNT MW/MVAR	TO BUS	NAME	CKT	AREA	MW	MVAR	TRANSFORMER RATIO	TRANSFORMER ANGLE	RATING A %I	RATING A MVA
1600	MUDDY 69.0	356	0.999	11.3	0.0	0.0	0.0										
		834	68.95		0.0	0.0	-6.3	1603	ELDOEMER69.0	1	356	0.0	-0.2			0	57
								1605	ELDONTAP69.0	1	356	42.8	3.3			91	47
								1700	HARCO S 69.0	1	356	-42.8	3.1			89	48
1605	ELDONTAP69.0	356	0.985	10.1	0.0	0.0	0.0										
		834	67.95		0.0	0.0	0.0	1600	MUDDY 69.0	1	356	-42.2	-2.7			91	47
								1604	ELDORADO69.0	1	357	14.6	4.8			36	43
								1606	MUDDY2 69.0	1	356	13.8	-1.1			34	41
								1608	MUDDY3 69.0	1	356	13.8	-1.1			34	41
1604	ELDORADO69.0	357	0.978	9.8	0.0	14.5	0.0										
		834	67.46		0.0	4.8	0.0	1605	ELDONTAP69.0	1	356	-14.5	-4.8			36	43
5000	BBTAP 69.0	356	0.980	9.6	0.0	15.0	0.0										
		834	67.61		0.0	9.3	-8.9	1606	MUDDY2 69.0	1	356	-19.9	1.0			50	41
								1607	MUDDY1 69.0	1	356	4.9	-1.3			13	41
1610	RIDGWAY 69.0	357	0.978	9.2	0.0	5.5	0.0										
		834	67.45		0.0	1.8	-6.0	1607	MUDDY1 69.0	1	356	-4.8	1.2			6	80
								1608	MUDDY3 69.0	1	356	-7.6	1.1			19	41
								1616	SHWNE TP69.0	1	357	0.2	0.0			1	41
								1618	MTR: KU 69.0	1	356	6.6	1.9				
1612	N HVN TP69.0	356	0.977	9.2	0.0	0.0	0.0										
		834	67.45		0.0	0.0	0.0	1607	MUDDY1 69.0	1	356	-0.1	-0.1			0	41
								1613	NEWHAVEN69.0	1	356	1.9	0.4			3	67
								1618	MTR: KU 69.0	1	356	-1.8	-0.4			5	41
1614	NEWHAVEN12.5	356	0.984	-23.5	0.0	1.9	0.0										
		834	12.27		0.0	0.5	0.0	1613	NEWHAVEN69.0	1	356	-1.9	-0.5	0.975UN	30.0UN	67	3
1616	SHWNE TP69.0	357	0.977	9.2	0.0	5.0	0.0										
		834	67.44		0.0	1.7	0.0	1610	RIDGWAY 69.0	1	357	-0.2	-0.1			1	41
								1618	MTR: KU 69.0	1	356	-4.8	-1.5			13	41
1700	HARCO S 69.0	356	1.020	14.9	0.0	0.0	0.0										
		816	70.38		0.0	0.0	0.0	1600	MUDDY 69.0	1	356	43.8	-0.7			89	48
								30704	HARCO 138	1	356	-43.8	0.7	0.975UN	-30.0UN	89	48

PTI INTERACTIVE POWER SYSTEM SIMULATOR--PSS/E TUE, JUN 05 2001 14:08
EASTERN REGIONS - 2001 SUMMER OPERATING GUIDE
MUDDY SOURCE / NORRIS OUT / 15 MW, 4.3 MVAR CAP BANK AT COAL MINE

BUS DATA							LINE DATA									
FROM BUS	NAME	AREA ZONE	VOLT PU/KV	ANGLE	GEN MW/MVAR	LOAD MW/MVAR	SHUNT MW/MVAR	TO BUS	NAME	CKT	AREA	MW	MVAR	TRANSFORMER RATIO	TRANSFORMER ANGLE	RATING A %T	RATING A MVA
1600	MUDDY 69.0	356	0.987	11.6	0.0	0.0	0.0										
		834	68.12		0.0	0.0	-6.1	1603	ELDOEMER69.0	1	356	14.4	3.7			26	57
								1605	ELDONTAP69.0	1	356	42.8	8.6			94	47
								31289	MUDDY 138	1	356	-57.2	-6.1	0.975UN	-30.0UN	104	56
1605	ELDONTAP69.0	356	0.970	10.4	0.0	0.0	0.0										
		834	66.92		0.0	0.0	0.0	1600	MUDDY 69.0	1	356	-42.2	-7.8			94	47
								1604	ELDORADO69.0	1	357	14.6	4.8			37	43
								1606	MUDDY2 69.0	1	356	13.8	1.5			35	41
								1608	MUDDY3 69.0	1	356	13.8	1.5			35	41
1604	ELDORADO69.0	357	0.963	10.1	0.0	14.5	0.0										
		834	66.42		0.0	4.8	0.0	1605	ELDONTAP69.0	1	356	-14.5	-4.8			37	43
5000	BBTAP 69.0	356	0.963	10.0	0.0	15.0	0.0										
		834	66.46		0.0	9.3	-4.0	1606	MUDDY2 69.0	1	356	-19.9	-3.6			51	41
								1607	MUDDY1 69.0	1	356	4.9	-1.7			13	41
1610	RIDGWAY 69.0	357	0.961	9.5	0.0	5.5	0.0										
		834	66.32		0.0	1.8	-5.8	1607	MUDDY1 69.0	1	356	-4.8	1.5			7	80
								1608	MUDDY3 69.0	1	356	-7.6	0.6			19	41
								1616	SHWNE TP69.0	1	357	0.2	0.0			1	41
								1618	MTR: KU 69.0	1	356	6.6	1.9				
1612	N HVN TP69.0	356	0.961	9.5	0.0	0.0	0.0										
		834	66.32		0.0	0.0	0.0	1607	MUDDY1 69.0	1	356	-0.1	-0.1			0	41
								1613	NEWHAVEN69.0	1	356	1.9	0.4			3	67
								1618	MTR: KU 69.0	1	356	-1.8	-0.4			5	41
1614	NEWHAVEN12.5	356	0.967	-23.3	0.0	1.9	0.0										
		834	12.06		0.0	0.5	0.0	1613	NEWHAVEN69.0	1	356	-1.9	-0.5	0.975UN	30.0UN	68	3
1616	SHWNE TP69.0	357	0.961	9.5	0.0	5.0	0.0										
		834	66.31		0.0	1.7	0.0	1610	RIDGWAY 69.0	1	357	-0.2	-0.1			1	41
								1618	MTR: KU 69.0	1	356	-4.8	-1.5			13	41
1700	HARCO S 69.0	356	1.029	21.9	0.0	0.0	0.0										
		816	70.98		0.0	0.0	0.0	30704	HARCO 138	1	356	0.0	0.0	0.975UN	-30.0UN	0	48
1665	NORRISCY69.0	356	0.958	9.0	0.0	0.0	0.0										
		838	66.07		0.0	0.0	0.0	1603	ELDOEMER69.0	1	356	-14.1	-3.5			27	57
								1660	WWC NORS69.0	1	356	10.0	4.0			17	67
								1666	NORRISCY12.5	1	356	4.1	-0.5	1.000LK	30.0LK	72	6
1666	NORRISCY12.5	356	0.966	-24.4	0.0	4.1	0.0										

	838	12.05		0.0	0.9	-1.7	1665 NORRISCY69.0	1	356	-4.1	0.7	1.000UN	30.0UN	72	6
1660 WWC NORS69.0	356	0.957	9.0	0.0	3.7	0.0	---								
	838	66.07		0.0	1.2	0.0	1657 TEXAS E 69.0	1	356	6.3	2.8			11	67
							1665 NORRISCY69.0	1	356	-10.0	-4.0			17	67
1657 TEXAS E 69.0	356	0.957	9.0	0.0	5.6	0.0	---								
	838	66.04		0.0	2.8	0.0	1655 NORRISNJ69.0	1	356	0.8	0.0			1	67
							1660 WWC NORS69.0	1	356	-6.3	-2.8			11	67
1671 NORRISNE12.5	356	0.980	-21.5	0.0	0.8	0.0	---								
	838	12.22		0.0	0.1	0.0	1670 NORRISNE69.0	1	356	-0.8	-0.1	0.975UN	30.0UN	8	11

PTI INTERACTIVE POWER SYSTEM SIMULATOR--PSS/E TUE, JUN 05 2001 14:10
EASTERN REGIONS - 2001 SUMMER OPERATING GUIDE
MUDDY SOURCE / NORRIS OUT / 15 MW, 9.3 MVAR CAP BANK AT COAL MINE

BUS DATA								LINE DATA									
FROM BUS	NAME	AREA ZONE	VOLT PU/KV	ANGLE	GEN MW/MVAR	LOAD MW/MVAR	SHUNT MW/MVAR	TO BUS	NAME	CKT	AREA	MW	MVAR	TRANSFORMER RATIO	TRANSFORMER ANGLE	RATING A %I	RATING A MVA
1600	MUDDY 69.0	356	1.010	11.8	0.0	0.0	0.0										
		834	69.68		0.0	0.0	-6.4	1603	ELDOEMER69.0	1	356	14.4	3.5			26	57
								1605	ELDONTAP69.0	1	356	42.8	2.9			90	47
								31289	MUDDY 138	1	356	-57.2	0.0	0.975UN	-30.0UN	101	56
1605	ELDONTAP69.0	356	0.996	10.6	0.0	0.0	0.0										
		834	68.70		0.0	0.0	0.0	1600	MUDDY 69.0	1	356	-42.2	-2.3			90	47
								1604	ELDORADO69.0	1	357	14.6	4.8			36	43
								1606	MUDDY2 69.0	1	356	13.8	-1.3			34	41
								1608	MUDDY3 69.0	1	356	13.8	-1.3			34	41
1604	ELDORADO69.0	357	0.989	10.3	0.0	14.5	0.0										
		834	68.22		0.0	4.8	0.0	1605	ELDONTAP69.0	1	356	-14.5	-4.8			36	43
5000	BBTAP 69.0	356	0.991	10.1	0.0	15.0	0.0										
		834	68.38		0.0	9.3	-9.1	1606	MUDDY2 69.0	1	356	-19.9	1.3			49	41
								1607	MUDDY1 69.0	1	356	4.9	-1.4			13	41
1610	RIDGWAY 69.0	357	0.989	9.7	0.0	5.5	0.0										
		834	68.23		0.0	1.8	-6.2	1607	MUDDY1 69.0	1	356	-4.8	1.2			6	80
								1608	MUDDY3 69.0	1	356	-7.6	1.2			19	41
								1616	SHWNE TP69.0	1	357	0.2	0.0			1	41
								1618	MTR: KU 69.0	1	356	6.6	1.9				
1612	N HVN TP69.0	356	0.989	9.7	0.0	0.0	0.0										
		834	68.22		0.0	0.0	0.0	1607	MUDDY1 69.0	1	356	-0.1	-0.1			0	41
								1613	NEWHAVEN69.0	1	356	1.9	0.4			3	67
								1618	MTR: KU 69.0	1	356	-1.8	-0.4			5	41
1614	NEWHAVEN12.5	356	0.996	-23.0	0.0	1.9	0.0										
		834	12.42		0.0	0.5	0.0	1613	NEWHAVEN69.0	1	356	-1.9	-0.5	0.975UN	30.0UN	66	3
1616	SHWNE TP69.0	357	0.989	9.7	0.0	5.0	0.0										
		834	68.21		0.0	1.7	0.0	1610	RIDGWAY 69.0	1	357	-0.2	-0.1			1	41
								1618	MTR: KU 69.0	1	356	-4.8	-1.5			12	41
1700	HARCO S 69.0	356	1.031	21.9	0.0	0.0	0.0										
		816	71.14		0.0	0.0	0.0	30704	HARCO 138	1	356	0.0	0.0	0.975UN	-30.0UN	0	48
1665	NORRISCY69.0	356	0.981	9.4	0.0	0.0	0.0										
		838	67.72		0.0	0.0	0.0	1603	ELDOEMER69.0	1	356	-14.1	-3.4			26	57
								1660	WWC NORS69.0	1	356	10.0	4.0			16	67

							1666	NORRISCY12.5	1	356	4.1	-0.6	1.000LK	30.0LK	71	6
1666 NORRISCY12.5	356	0.991	-23.9	0.0	4.1	0.0	---									
	838	12.36		0.0	0.9	-1.8	1665	NORRISCY69.0	1	356	-4.1	0.8	1.000UN	30.0UN	71	6
1660 WWC NORS69.0	356	0.981	9.4	0.0	3.7	0.0	---									
	838	67.71		0.0	1.2	0.0	1657	TEXAS E 69.0	1	356	6.3	2.8			11	67
							1665	NORRISCY69.0	1	356	-10.0	-4.0			16	67
1657 TEXAS E 69.0	356	0.981	9.3	0.0	5.6	0.0	---									
	838	67.68		0.0	2.8	0.0	1655	NORRISNJ69.0	1	356	0.8	0.0			1	67
							1660	WWC NORS69.0	1	356	-6.3	-2.8			11	67
1671 NORRISNE12.5	356	1.005	-21.1	0.0	0.8	0.0	---									
	838	12.53		0.0	0.1	0.0	1670	NORRISNE69.0	1	356	-0.8	-0.1	0.975UN	30.0UN	8	11

PTI INTERACTIVE POWER SYSTEM SIMULATOR--PSS/E WED, JUN 06 2001 6:59
EASTERN REGIONS - 2001 SUMMER OPERATING GUIDE
NORRIS SOURCE, MUDDY OUT COAL MINE OFF

BUS DATA								LINE DATA											
FROM BUS	NAME	AREA ZONE	VOLT PU/KV	ANGLE	GEN MW/MVAR	LOAD MW/MVAR	SHUNT MW/MVAR	TO BUS	NAME	CKT	AREA	MW	MVAR	TRANSFORMER RATIO	TRANSFORMER ANGLE	RATING A %I	RATING A MVA
1600	MUDDY 69.0	356	0.964	6.7	0.0	0.0	0.0										
		834	66.50		0.0	0.0	-5.9	1603	ELDOEMER69.0	1	356	-27.4	3.1			50	57
								1605	ELDONTAP69.0	1	356	27.4	2.7			61	47
1605	ELDONTAP69.0	356	0.954	5.9	0.0	0.0	0.0										
		834	65.81		0.0	0.0	0.0	1600	MUDDY 69.0	1	356	-27.1	-2.6			61	47
								1604	ELDORADO69.0	1	357	14.6	4.8			37	43
								1606	MUDDY2 69.0	1	356	6.3	-1.1			16	41
								1608	MUDDY3 69.0	1	356	6.3	-1.1			16	41
1604	ELDORADO69.0	357	0.946	5.6	0.0	14.5	0.0										
		834	65.30		0.0	4.8	0.0	1605	ELDONTAP69.0	1	356	-14.5	-4.8			37	43
5000	BBTAP 69.0	356	0.952	5.7	0.0	0.0	0.0										
		834	65.71		0.0	0.0	0.0	1606	MUDDY2 69.0	1	356	-6.3	1.1			16	41
								1607	MUDDY1 69.0	1	356	6.3	-1.1			16	41
1610	RIDGWAY 69.0	357	0.948	5.1	0.0	5.5	0.0										
		834	65.44		0.0	1.8	-5.7	1607	MUDDY1 69.0	1	356	-6.1	0.9			8	80
								1608	MUDDY3 69.0	1	356	-6.2	1.0			16	41
								1616	SHWNE TP69.0	1	357	0.2	0.0			1	41
								1618	MTR: KU 69.0	1	356	6.6	1.9				
1612	N HVN TP69.0	356	0.948	5.1	0.0	0.0	0.0										
		834	65.43		0.0	0.0	0.0	1607	MUDDY1 69.0	1	356	-0.1	-0.1			0	41
								1613	NEWHAVEN69.0	1	356	1.9	0.5			3	67
								1618	MTR: KU 69.0	1	356	-1.8	-0.4			5	41
1614	NEWHAVEN12.5	356	0.953	-27.7	0.0	1.9	0.0										
		834	11.89		0.0	0.5	0.0	1613	NEWHAVEN69.0	1	356	-1.9	-0.5	0.975UN	30.0UN	69	3
1616	SHWNE TP69.0	357	0.948	5.1	0.0	5.0	0.0										
		834	65.43		0.0	1.7	0.0	1610	RIDGWAY 69.0	1	357	-0.2	-0.1			1	41
								1618	MTR: KU 69.0	1	356	-4.8	-1.5			13	41
1700	HARCO S 69.0	356	1.036	22.7	0.0	0.0	0.0										
		816	71.48		0.0	0.0	0.0	30704	HARCO 138	1	356	0.0	0.0	0.975UN	-30.0UN	0	48
1650	NORRIS N69.0	356	1.005	14.0	0.0	12.5	0.0										
		838	69.35		0.0	7.8	-6.4	1655	NORRISNJ69.0	1	356	42.2	3.5			90	47
								31351	NORRIS 138	1	356	-54.7	-4.9	0.975UN	-30.0UN	82	67

1665 NORRISCY69.0	356	0.991	12.2	0.0	0.0	0.0	1603 ELDOEMER69.0	1	356	28.4	-1.1			50	57
	838	68.40		0.0	0.0	0.0	1660 WWC NORS69.0	1	356	-32.5	1.7			49	67
							1666 NORRISCY12.5	1	356	4.1	-0.6	1.000LK	30.0LK	70	6
1666 NORRISCY12.5	356	1.001	-21.0	0.0	4.1	0.0	1665 NORRISCY69.0	1	356	-4.1	0.9	1.000UN	30.0UN	70	6
	838	12.49		0.0	0.9	-1.8									
1660 WWC NORS69.0	356	0.991	12.2	0.0	3.7	0.0	1657 TEXAS E 69.0	1	356	-36.2	0.5			54	67
	838	68.41		0.0	1.2	0.0	1665 NORRISCY69.0	1	356	32.5	-1.7			49	67
1657 TEXAS E 69.0	356	0.992	12.4	0.0	5.6	0.0	1655 NORRISNJ69.0	1	356	-41.7	-2.4			63	67
	838	68.48		0.0	2.8	0.0	1660 WWC NORS69.0	1	356	36.2	-0.4			54	67
1671 NORRISNE12.5	356	1.001	-13.2	0.0	0.8	0.0	1670 NORRISNE69.0	1	356	-0.8	-0.1	0.975UN	30.0UN	8	11
	838	12.48		0.0	0.1	0.0									

PTI INTERACTIVE POWER SYSTEM SIMULATOR--PSS/E WED, JUN 06 2001 7:03
EASTERN REGIONS - 2001 SUMMER OPERATING GUIDE
NORRIS SOURCE, MUDDY OUT, 10 MW AT COAL MINE

BUS DATA								LINE DATA									
FROM BUS	NAME	AREA ZONE	VOLT PU/KV	ANGLE	GEN MW/MVAR	LOAD MW/MVAR	SHUNT MW/MVAR	TO BUS	NAME	CKT	AREA	MW	MVAR	TRANSFORMER RATIO	TRANSFORMER ANGLE	RATING A %I	RATING A MVA
1600	MUDDY 69.0	356	0.730	-2.9	0.0	0.0	0.0										
		834	50.40		0.0	0.0	-3.4	1603	ELDOEMER69.0	1	356	-38.3	-10.4			95	57
								1605	ELDONTAP69.0	1	356	38.3	13.8			119	47
1605	ELDONTAP69.0	356	0.705	-4.6	0.0	0.0	0.0										
		834	48.67		0.0	0.0	0.0	1600	MUDDY 69.0	1	356	-37.4	-12.4			119	47
								1604	ELDORADO69.0	1	357	14.6	5.0			51	43
								1606	MUDDY2 69.0	1	356	11.4	3.7			41	41
								1608	MUDDY3 69.0	1	356	11.4	3.7			41	41
1604	ELDORADO69.0	357	0.695	-5.2	0.0	14.5	0.0										
		834	47.98		0.0	4.8	0.0	1605	ELDONTAP69.0	1	356	-14.5	-4.8			51	43
5000	BBTAP 69.0	356	0.696	-5.2	0.0	10.0	0.0										
		834	48.03		0.0	6.2	0.0	1606	MUDDY2 69.0	1	356	-15.4	-6.1			58	41
								1607	MUDDY1 69.0	1	356	5.4	-0.1			19	41
1610	RIDGWAY 69.0	357	0.690	-6.0	0.0	5.5	0.0										
		834	47.61		0.0	1.8	-3.0	1607	MUDDY1 69.0	1	356	-5.2	0.1			9	80
								1608	MUDDY3 69.0	1	356	-7.1	-1.0			25	41
								1616	SHWNE TP69.0	1	357	0.2	0.1			1	41
								1618	MTR: KU 69.0	1	356	6.6	2.1				
1612	N HVN TP69.0	356	0.690	-6.0	0.0	0.0	0.0										
		834	47.60		0.0	0.0	0.0	1607	MUDDY1 69.0	1	356	-0.1	-0.1			0	41
								1613	NEWHAVEN69.0	1	356	1.9	0.6			4	67
								1618	MTR: KU 69.0	1	356	-1.8	-0.6			7	41
1614	NEWHAVEN12.5	356	0.679	-41.5	0.0	1.9	0.0										
		834	8.470		0.0	0.5	0.0	1613	NEWHAVEN69.0	1	356	-1.9	-0.5	0.975UN	30.0UN	96	3
1616	SHWNE TP69.0	357	0.690	-6.0	0.0	5.0	0.0										
		834	47.59		0.0	1.7	0.0	1610	RIDGWAY 69.0	1	357	-0.2	-0.1			1	41
								1618	MTR: KU 69.0	1	356	-4.8	-1.6			18	41
1700	HARCO S 69.0	356	1.031	22.6	0.0	0.0	0.0										
		816	71.16		0.0	0.0	0.0	30704	HARCO 138	1	356	0.0	0.0	0.975UN	-30.0UN	0	48
1650	NORRIS N69.0	356	0.892	9.9	0.0	12.5	0.0										
		838	61.57		0.0	7.8	-5.0	1655	NORRISNJ69.0	1	356	56.6	27.1			150	47
								31351	NORRIS 138	1	356	-69.2	-29.8	0.975UN	-30.0UN	126	67
1665	NORRISCY69.0	356	0.853	7.3	0.0	0.0	0.0										

	838	58.84		0.0	0.0	0.0	1603	ELDOEMER69.0	1	356	41.9	19.6			95	57
							1660	WWC NORS69.0	1	356	-46.0	-19.5			88	67
							1666	NORRISCY12.5	1	356	4.1	-0.1	1.000LK	30.0LK	80	6
1666 NORRISCY12.5	356	0.856	-27.1	0.0	4.1	0.0	---	---	---	---	---	---	---	---	---	---
	838	10.68		0.0	0.9	-1.3	1665	NORRISCY69.0	1	356	-4.1	0.4	1.000UN	30.0UN	80	6
1660 WWC NORS69.0	356	0.853	7.3	0.0	3.7	0.0	---	---	---	---	---	---	---	---	---	---
	838	58.87		0.0	1.2	0.0	1657	TEXAS E 69.0	1	356	-49.7	-20.7			94	67
							1665	NORRISCY69.0	1	356	46.1	19.5			88	67
1657 TEXAS E 69.0	356	0.857	7.6	0.0	5.6	0.0	---	---	---	---	---	---	---	---	---	---
	838	59.10		0.0	2.8	0.0	1655	NORRISNJ69.0	1	356	-55.4	-23.8			105	67
							1660	WWC NORS69.0	1	356	49.8	21.0			94	67
1671 NORRISNE12.5	356	1.012	-13.4	0.0	0.8	0.0	---	---	---	---	---	---	---	---	---	---
	838	12.62		0.0	0.1	0.0	1670	NORRISNE69.0	1	356	-0.8	-0.1	0.975UN	30.0UN	8	11

PTI INTERACTIVE POWER SYSTEM SIMULATOR--PSS/E WED, JUN 06 2001 7:05
EASTERN REGIONS - 2001 SUMMER OPERATING GUIDE
NORRIS SOURCE / MUDDY OUT - 10 MW, 4.3 MVAR CAP AT COAL MINE

BUS DATA								LINE DATA									
FROM BUS	NAME	AREA ZONE	VOLT PU/KV	ANGLE	GEN MW/MVAR	LOAD MW/MVAR	SHUNT MW/MVAR	TO BUS	NAME	CKT	AREA	MW	MVAR	TRANSFORMER RATIO	TRANSFORMER ANGLE	RATING A %I	RATING A MVA
1600	MUDDY 69.0	356	0.819	-0.6	0.0	0.0	0.0										
		834	56.50		0.0	0.0	-4.2	1603	ELDOEMER69.0	1	356	-38.0	-5.1			82	57
								1605	ELDONTAP69.0	1	356	38.0	9.4			102	47
1605	ELDONTAP69.0	356	0.799	-2.0	0.0	0.0	0.0										
		834	55.15		0.0	0.0	0.0	1600	MUDDY 69.0	1	356	-37.3	-8.4			102	47
								1604	ELDORADO69.0	1	357	14.6	4.9			45	43
								1606	MUDDY2 69.0	1	356	11.4	1.8			35	41
								1608	MUDDY3 69.0	1	356	11.3	1.8			35	41
1604	ELDORADO69.0	357	0.790	-2.5	0.0	14.5	0.0										
		834	54.54		0.0	4.8	0.0	1605	ELDONTAP69.0	1	356	-14.5	-4.8			45	43
5000	BBTAP 69.0	356	0.793	-2.5	0.0	10.0	0.0										
		834	54.69		0.0	6.2	-2.7	1606	MUDDY2 69.0	1	356	-15.4	-3.1			48	41
								1607	MUDDY1 69.0	1	356	5.4	-0.4			17	41
1610	RIDGWAY 69.0	357	0.788	-3.2	0.0	5.5	0.0										
		834	54.35		0.0	1.8	-3.9	1607	MUDDY1 69.0	1	356	-5.2	0.3			8	80
								1608	MUDDY3 69.0	1	356	-7.1	-0.3			22	41
								1616	SHWNE TP69.0	1	357	0.2	0.0			1	41
								1618	MTR: KU 69.0	1	356	6.6	2.0				
1612	N HVN TP69.0	356	0.788	-3.2	0.0	0.0	0.0										
		834	54.35		0.0	0.0	0.0	1607	MUDDY1 69.0	1	356	-0.1	-0.1			0	41
								1613	NEWHAVEN69.0	1	356	1.9	0.5			4	67
								1618	MTR: KU 69.0	1	356	-1.8	-0.5			6	41
1614	NEWHAVEN12.5	356	0.784	-37.4	0.0	1.9	0.0										
		834	9.774		0.0	0.5	0.0	1613	NEWHAVEN69.0	1	356	-1.9	-0.5	0.975UN	30.0UN	84	3
1616	SHWNE TP69.0	357	0.787	-3.2	0.0	5.0	0.0										
		834	54.34		0.0	1.7	0.0	1610	RIDGWAY 69.0	1	357	-0.2	-0.1			1	41
								1618	MTR: KU 69.0	1	356	-4.8	-1.5			16	41
1700	HARCO S 69.0	356	1.033	22.6	0.0	0.0	0.0										
		816	71.29		0.0	0.0	0.0	30704	HARCO 138	1	356	0.0	0.0	0.975UN	-30.0UN	0	48
1650	NORRIS N69.0	356	0.936	10.8	0.0	12.5	0.0										
		838	64.56		0.0	7.8	-5.5	1655	NORRISNJ69.0	1	356	55.0	18.2			132	47
								31351	NORRIS 138	1	356	-67.6	-20.4	0.975UN	-30.0UN	113	67
1665	NORRISCY69.0	356	0.906	8.4	0.0	0.0	0.0										
		838	62.48		0.0	0.0	0.0	1603	ELDOEMER69.0	1	356	40.6	11.7			82	57

								1660 WWC NORS69.0	1	356	-44.8	-11.5				76	67
								1666 NORRISCY12.5	1	356	4.1	-0.3	1.000LK	30.0LK		76	6
1666 NORRISCY12.5	356	0.912	-25.5	0.0	4.1	0.0											
	838	11.37		0.0	0.9	-1.5		1665 NORRISCY69.0	1	356	-4.1	0.6	1.000UN	30.0UN		76	6
1660 WWC NORS69.0	356	0.906	8.4	0.0	3.7	0.0											
	838	62.50		0.0	1.2	0.0		1657 TEXAS E 69.0	1	356	-48.4	-12.7				82	67
								1665 NORRISCY69.0	1	356	44.8	11.5				76	67
1657 TEXAS E 69.0	356	0.908	8.6	0.0	5.6	0.0											
	838	62.68		0.0	2.8	0.0		1655 NORRISNJ69.0	1	356	-54.1	-15.7				93	67
								1660 WWC NORS69.0	1	356	48.5	12.9				82	67
1671 NORRISNE12.5	356	1.016	-13.3	0.0	0.8	0.0											
	838	12.67		0.0	0.1	0.0		1670 NORRISNE69.0	1	356	-0.8	-0.1	0.975UN	30.0UN		8	11

PTI INTERACTIVE POWER SYSTEM SIMULATOR--PSS/E WED, JUN 06 2001 7:08
EASTERN REGIONS - 2001 SUMMER OPERATING GUIDE
NORRIS SOURCE, MUDDY OUT - 10 MW, 9.3 MVAR CAP BANK AT COAL MINE

BUS DATA								LINE DATA											
FROM BUS	NAME	AREA ZONE	VOLT PU/KV	ANGLE	GEN MW/MVAR	LOAD MW/MVAR	SHUNT MW/MVAR	TO BUS	NAME	CKT	AREA	MW	MVAR	TRANSFORMER RATIO	TRANSFORMER ANGLE	RATING A %I	RATING A MVA
1600	MUDDY 69.0	356	0.898	0.7	0.0	0.0	0.0										
		834	61.96		0.0	0.0	-5.1	1603	ELDOEMER69.0	1	356	-37.8	1.7			74	57
								1605	ELDONTAP69.0	1	356	37.8	3.4			90	47
1605	ELDONTAP69.0	356	0.883	-0.5	0.0	0.0	0.0										
		834	60.96		0.0	0.0	0.0	1600	MUDDY 69.0	1	356	-37.2	-2.7			90	47
								1604	ELDORADO69.0	1	357	14.6	4.8			40	43
								1606	MUDDY2 69.0	1	356	11.3	-1.1			31	41
								1608	MUDDY3 69.0	1	356	11.3	-1.1			31	41
1604	ELDORADO69.0	357	0.876	-0.9	0.0	14.5	0.0										
		834	60.41		0.0	4.8	0.0	1605	ELDONTAP69.0	1	356	-14.5	-4.8			40	43
5000	BBTAP 69.0	356	0.880	-1.0	0.0	10.0	0.0										
		834	60.69		0.0	6.2	-7.2	1606	MUDDY2 69.0	1	356	-15.4	1.5			43	41
								1607	MUDDY1 69.0	1	356	5.4	-0.5			15	41
1610	RIDGWAY 69.0	357	0.875	-1.6	0.0	5.5	0.0										
		834	60.40		0.0	1.8	-4.8	1607	MUDDY1 69.0	1	356	-5.2	0.4			8	80
								1608	MUDDY3 69.0	1	356	-7.1	0.6			20	41
								1616	SHWNE TP69.0	1	357	0.2	0.0			1	41
								1618	MTR: KU 69.0	1	356	6.6	2.0				
1612	N HVN TP69.0	356	0.875	-1.6	0.0	0.0	0.0										
		834	60.39		0.0	0.0	0.0	1607	MUDDY1 69.0	1	356	-0.1	-0.1			0	41
								1613	NEWHAVEN69.0	1	356	1.9	0.5			3	67
								1618	MTR: KU 69.0	1	356	-1.8	-0.4			5	41
1614	NEWHAVEN12.5	356	0.877	-35.0	0.0	1.9	0.0										
		834	10.93		0.0	0.5	0.0	1613	NEWHAVEN69.0	1	356	-1.9	-0.5	0.975UN	30.0UN	75	3
1616	SHWNE TP69.0	357	0.875	-1.6	0.0	5.0	0.0										
		834	60.38		0.0	1.7	0.0	1610	RIDGWAY 69.0	1	357	-0.2	-0.1			1	41
								1618	MTR: KU 69.0	1	356	-4.8	-1.5			14	41
1700	HARCO S 69.0	356	1.035	22.6	0.0	0.0	0.0										
		816	71.41		0.0	0.0	0.0	30704	HARCO 138	1	356	0.0	0.0	0.975UN	-30.0UN	0	48
1650	NORRIS N69.0	356	0.974	11.4	0.0	12.5	0.0										
		838	67.19		0.0	7.8	-6.0	1655	NORRISNJ69.0	1	356	54.1	9.3			120	47
								31351	NORRIS 138	1	356	-66.7	-11.1	0.975UN	-30.0UN	104	67

```
1665 NORRISCY69.0 356  0.952    9.1      0.0      0.0      0.0 ---------------------------------------------------------------------
                  838  65.69             0.0      0.0      0.0  1603 ELDOEMER69.0  1  356     39.9    3.5                    74   57
                                                                  1660 WWC NORS69.0  1  356    -44.0   -3.1                    69   67
                                                                  1666 NORRISCY12.5  1  356      4.1   -0.5  1.000LK  30.0LK  72    6
1666 NORRISCY12.5 356  0.960  -24.5      0.0      4.1      0.0 ---------------------------------------------------------------------
                  838  11.98             0.0      0.9     -1.7  1665 NORRISCY69.0  1  356     -4.1    0.7  1.000UN  30.0UN  72    6

1660 WWC NORS69.0 356  0.952    9.1      0.0      3.7      0.0 ---------------------------------------------------------------------
                  838  65.70             0.0      1.2      0.0  1657 TEXAS E 69.0  1  356    -47.7   -4.3                    75   67
                                                                  1665 NORRISCY69.0  1  356     44.0    3.1                    69   67
1657 TEXAS E 69.0 356  0.954    9.3      0.0      5.6      0.0 ---------------------------------------------------------------------
                  838  65.82             0.0      2.8      0.0  1655 NORRISNJ69.0  1  356    -53.3   -7.2                    84   67
                                                                  1660 WWC NORS69.0  1  356     47.8    4.5                    75   67
1671 NORRISNE12.5 356  1.020  -13.3      0.0      0.8      0.0 ---------------------------------------------------------------------
                  838  12.72             0.0      0.1      0.0  1670 NORRISNE69.0  1  356     -0.8   -0.1  0.975UN  30.0UN   8   11
```

Outage Information on Muddy to Shawneetown Line
1996 - 2001

InterruptionCause	Date	SubstationID	BreakerID	Time	Outage Duration	OtherInformation	Lockout	WeatherType
Unknown	3/26/01	S84	710	5:52			FALSE	Calm
Customer Equipment	2/24/01	S84	710	22:50	2:41		TRUE	
Customer Equipment	2/24/01	S84	710	21:00	1:50		TRUE	
Overhead Problem	12/16/00	S84	710	19:51	3:09		TRUE	Wind
Galloping Conductor	12/16/00	S84	710	19:47	1:06		TRUE	Wind
Unknown	11/19/00	S84	710	2:30			FALSE	Calm
Pre-Arranged	11/2/00	S84	710	13:59	2:52		TRUE	
Insulator Failure	10/18/00	S84	710	9:12	4:16		TRUE	Calm
Trees	5/12/00	S84	710	22.48	9:44		TRUE	
Unknown	6/26/99	S84	710	21:07			FALSE	Calm
Unknown	6/6/99	S84	710	18:14			FALSE	Thunderstorm
Animal	5/27/99	S84	710	21:31	1:27		TRUE	
Pre-Arranged	5/15/99	S84	710	6:20	1:38		TRUE	
Unknown	5/8/99	S84	710	5:50			FALSE	Calm
Overhead Problem	1/8/99	S84	710	21.51	1:11		TRUE	
Primary Metered Customer Equipment Problem	10/7/98	S84	710	9:50	2:00	Failed transformer at Eldorado	TRUE	Calm
Pole Hardware Failure	8/18/98	S84	710	18:58	7:13	Phase down	TRUE	Thunderstorm
Pole Hardware Failure	7/7/98	S84	710	19:37	10:13	Phase down	TRUE	Thunderstorm
Primary Metered Customer Equipment Problem	6/21/98	S84	710	4:14	5:52	Transformer bad order at Eldorado	TRUE	Thunderstorm
Unknown	5/22/98	S84	710	7:35			FALSE	Thunderstorm
Unknown	4/23/98	S84	710	11:02			FALSE	Calm
Unknown	12/28/97	S84	710	6:35			FALSE	Calm
Unknown	6/6/97	S84	710	7:51			FALSE	Thunderstorm
Unknown	10/22/96	S84	710	15:18			FALSE	Thunderstorm
Unknown	7/2/96	S84	710	19:36			FALSE	Thunderstorm
Unknown	5/25/96	S84	710	21:33			FALSE	Calm
Unknown	5/10/96	S84	710	21:13			FALSE	Thunderstorm
Unknown	4/20/96	S84	710	20:35	1:06		TRUE	Thunderstorm
Unknown	3/31/96	S84	710	3:25			FALSE	Thunderstorm
Unknown	3/24/96	S84	710	22:40			FALSE	Thunderstorm
Unknown	3/20/96	S84	710	6:54			FALSE	Snow
Unknown	1/18/96	S84	710	9:35			FALSE	Thunderstorm

IP EXHIBIT
4.2