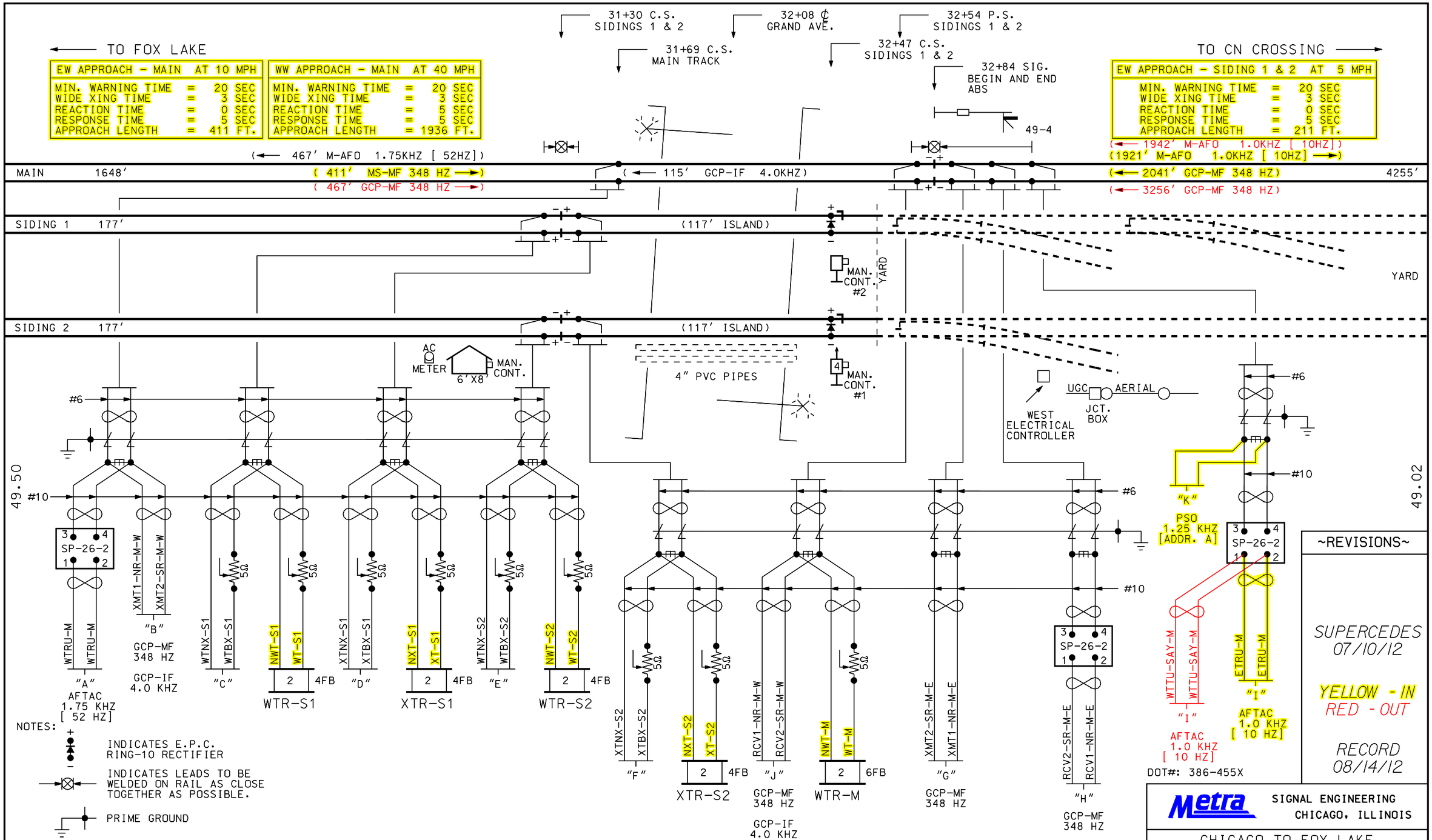

EW APPROACH - MAIN AT 10 MPH	
MIN. WARNING TIME	20 SEC
WIDE XING TIME	3 SEC
REACTION TIME	0 SEC
RESPONSE TIME	5 SEC
APPROACH LENGTH	411 FT.

WW APPROACH - MAIN AT 40 MPH	
MIN. WARNING TIME	20 SEC
WIDE XING TIME	3 SEC
REACTION TIME	5 SEC
RESPONSE TIME	5 SEC
APPROACH LENGTH	1936 FT.

EW APPROACH - SIDING 1 & 2 AT 5 MPH	
MIN. WARNING TIME	20 SEC
WIDE XING TIME	3 SEC
REACTION TIME	0 SEC
RESPONSE TIME	5 SEC
APPROACH LENGTH	211 FT.

NOTES:

INDICATES E.P.C. RING-10 RECTIFIER

INDICATES LEADS TO BE WELDED ON RAIL AS CLOSE TOGETHER AS POSSIBLE.

PRIME GROUND

INDICATES AUTOMATIC GATE PER FHWA MUTCD WITH SIDELIGHTS ON NORTH SIGNAL AND PEDESTRIAN BELL ON SOUTH STUB POLE W/ NO LIGHTS

(← 2041′ GCP-MF 348 HZ)
- FREQUENCY
- LENGTH OF CIRCUIT
- DIRECTION TO TRANSMITTER

EW APPROACH - MAIN AT 10 MPH	
MIN. WARNING TIME	22 SEC
WIDE XING TIME	0 SEC
REACTION TIME	5 SEC
RESPONSE TIME	5 SEC
APPROACH LENGTH	467 FT.

WW APPROACH - MAIN AT 60 MPH	
MIN. WARNING TIME	27 SEC
WIDE XING TIME	0 SEC
REACTION TIME	5 SEC
RESPONSE TIME	5 SEC
APPROACH LENGTH	3256 FT.

EW APPROACH - SIDING 1 & 2 AT 5 MPH	
MIN. WARNING TIME	20 SEC
REACTION TIME	5 SEC
RESPONSE TIME	0 SEC
APPROACH LENGTH	183 FT.

~REVISIONS~

SUPERCEDES 07/10/12

YELLOW - IN
RED - OUT

RECORD 08/14/12

DOT#: 386-455X

Metra SIGNAL ENGINEERING CHICAGO, ILLINOIS

CHICAGO TO FOX LAKE
GRAND AVE
PLAN VIEW

REFERENCE:	DATE:
49.41 SH.1 THRU SH.9	07/10/12

DESIGNED	DRAWN	CHECKED	APPROVED
BM	BM	JGB	WPK

DISTRICT	PRINT NUMBER
MW/N	49.41 SH.1

12-DEC-2012 14:49

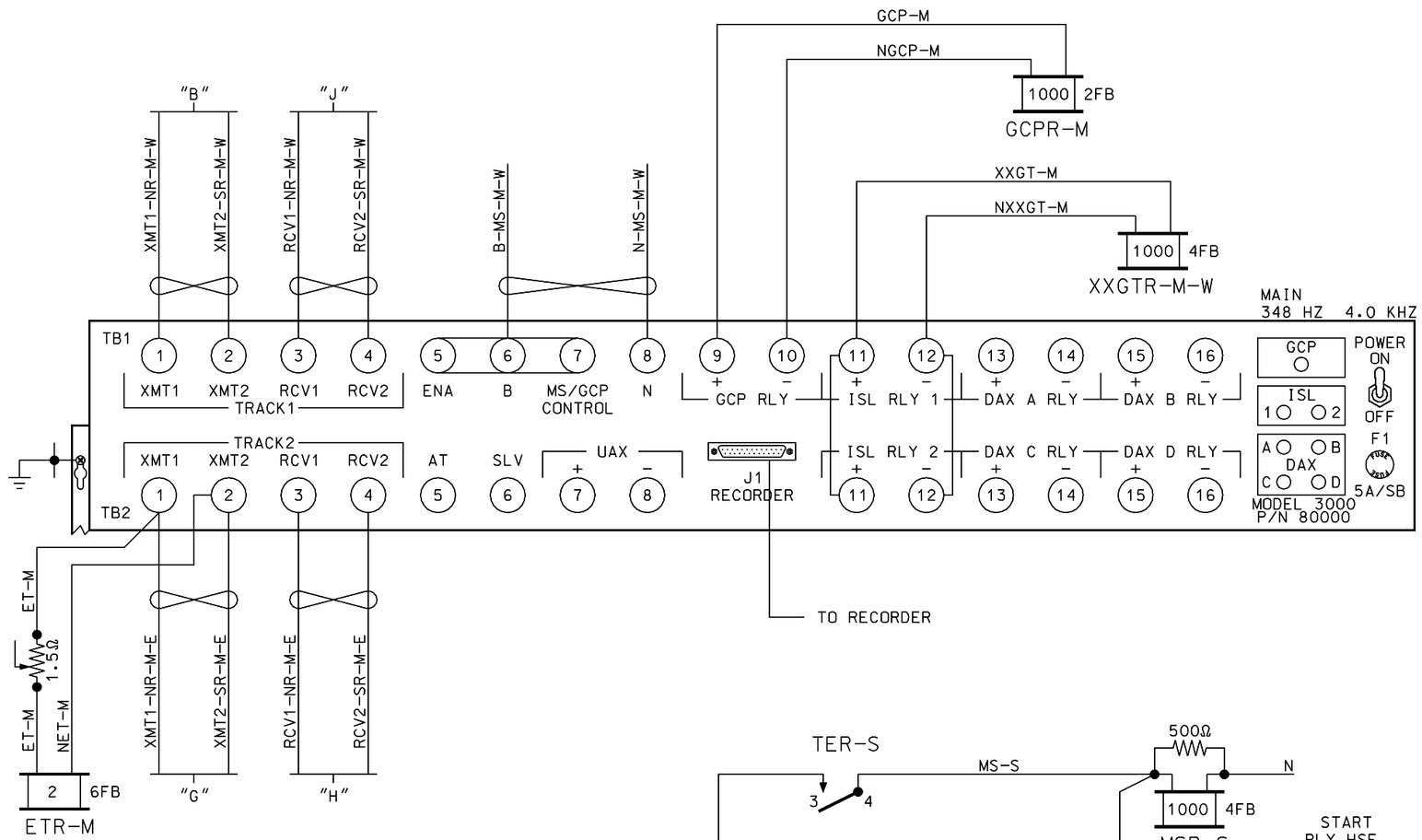

MAIN TK.
GCP 3000 PROGRAMMING SYSTEM APPLICATION PARAMETERS

NUMBER OF TRACKS	2			
FREQUENCY	T1: 348 HZ	T2:348 HZ		
UNIDIRECTIONAL/BIDIRECTIONAL	T1: UNI	T2: UNI		
XMIT LEVEL - MED/HI	T1: MED	T2: MED		
PREDICTOR/MOTION SENSOR	T1: MS	T2: GCP		
WARNING TIME SELECTED	T1: N/A SEC	T2: 33 SEC	32	
APPROACH DISTANCE 467	T1: 411 FT	T2:1936 FT	3226	
UAX PICKUP DELAY (UAX1)	0 SEC.			
ENA/UAX2 DELAY	0 SEC.			
ISLAND DISTANCE	T1: 120 FT	T2:N/A		
NUMBER OF DAX'S	0			
DAX A TRK/DIST/WARNING TIME	FT	SEC.		
DAX B TRK/DIST/WARNING TIME	FT	SEC.		
DAX C TRK/DIST/WARNING TIME	FT	SEC.		
DAX D TRK/DIST/WARNING TIME	FT	SEC.		
SLAVING MASTER/SLAVE	MASTER			
PASSWORD DISABLED/ENABLED	DISABLED			
RECORDER INSTALLED/NOT INSTALLED	INSTALLED			
SWITCH TO MS	T1: 10 EZ	T2: 10 EZ		
TRANSFER DELAY MS TO GCP	T1: 0 SEC.	T2: 0 SEC.		
PRIME PREDICTION OFFSET	T1: 0 FT	T2: 0 FT		
PICKUP DELAY PRIME	15 SEC.			
PICKUP DELAY DAX A	SEC.			
PICKUP DELAY DAX B	SEC.			
PICKUP DELAY DAX C	SEC.			
PICKUP DELAY DAX D	SEC.			
ENHANCED DETECT MODE	ON			
BACK TO BACK	OFF			
STATION STOP TIMER	10 SEC.			
T1 # OF TRACK WIRES 4/6	4			
T2 # OF TRACK WIRES 4/6	4			
LOW EX ADJUSTMENT	0			
LOW EZ DETECTION	T1:	T2:		
LOW EZ DETECTION TIMER	T1: MIN.	T2: MIN.		
POSITIVE START (0 = OFF)	T1: EZ	T2: EZ		
POSITIVE START TIMEOUT (0 = NONE)	T1: MIN.	T2: MIN.		
SET AT OPERATION	NORMAL			
DIAGNOSTIC MESSAGES				
DAX MESSAGES				
ADVANCE PREEMPT TIMER	SEC.			

TOP UNIT

DUAL 3000 GCP MODULE ASSEMBLIES

80011 ISLAND 1
EMPTY
80012 TRANSCEIVER 1
80012 TRANSCEIVER 2
80013 RELAY DRIVE
80044 PROCESSOR
80015 RECORDER
EMPTY
EMPTY
80020 INTERFACE
EMPTY

~REVISIONS~

TBB 03/17/03 OK TGB
TBB 06/09/03 OK TGB
TGB 11/14/05 OK TBB
TBB 03/31/06 OK WK
TBB 01/15/08 OK TGB
GM 02/20/12 OK WK

SUPERCEDES
07/10/12

YELLOW - IN
RED - OUT

RECORD
08/14/12

Metra SIGNAL ENGINEERING
CHICAGO, ILLINOIS

CHICAGO TO FOX LAKE
GRAND AVE. - FOX LAKE
3000 GCP - MAIN TK.

REFERENCE:			DATE:
49.41 SH.1 THRU SH.9			09/12/02
DESIGNED	DRAWN	CHECKED	APPROVED
TGB	TGB	DG	WK
DISTRICT	PRINT NUMBER		
MW/N	49.41 SH.2		

12-DEC-2012 14:49
FOX4941.002

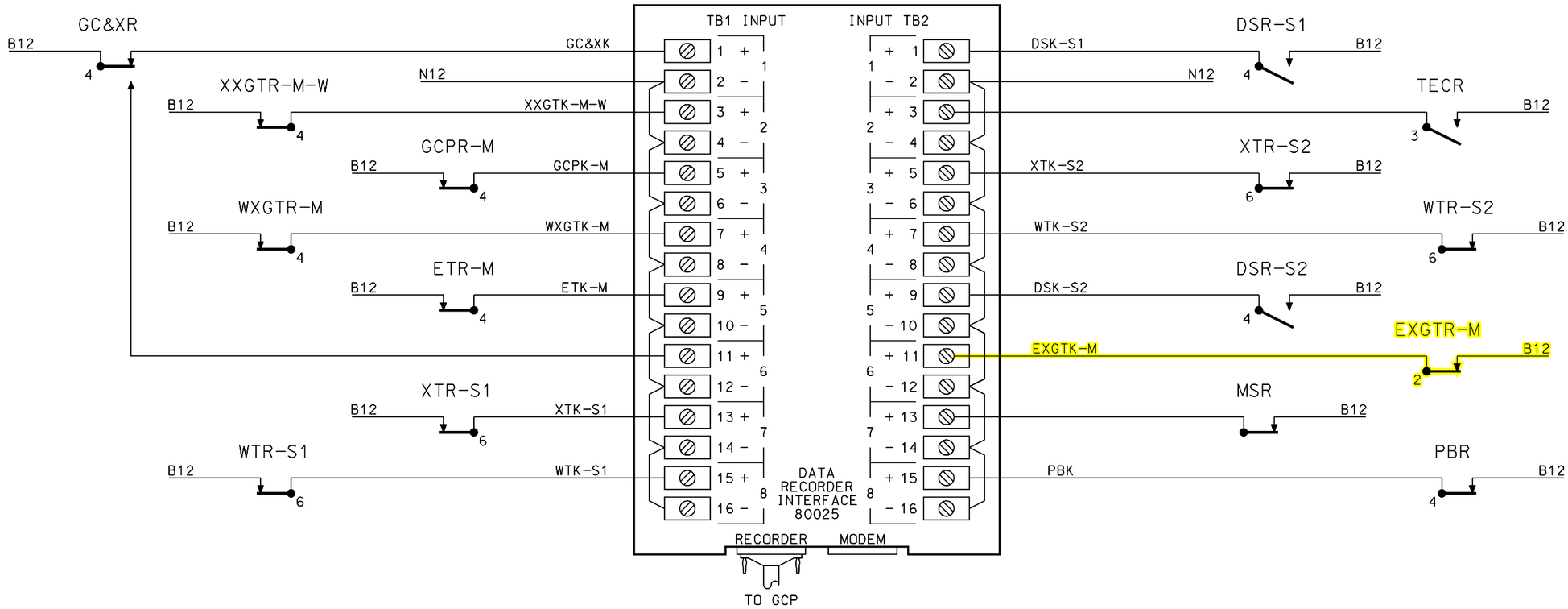

NOTE:
FIELD TO VERIFY WIRING AND TAGS

~REVISIONS~

FCB 11/14/05 OK TBB

YELLOW - IN
RED - OUT

RECORD
07/10/12

Metra SIGNAL ENGINEERING
CHICAGO, ILLINOIS

CHICAGO TO FOX LAKE
GRAND AVENUE, FOX LAKE
GCP RECORDER

REFERENCE:			DATE:
49.41 SH. 1 THRU SH. 9			06/09/03
DESIGNED	DRAWN	CHECKED	APPROVED
	TBB	FCB	WAK
DISTRICT	PRINT NUMBER		
MW/N	49.41 SH.3		

12-DEC-2012 14:50

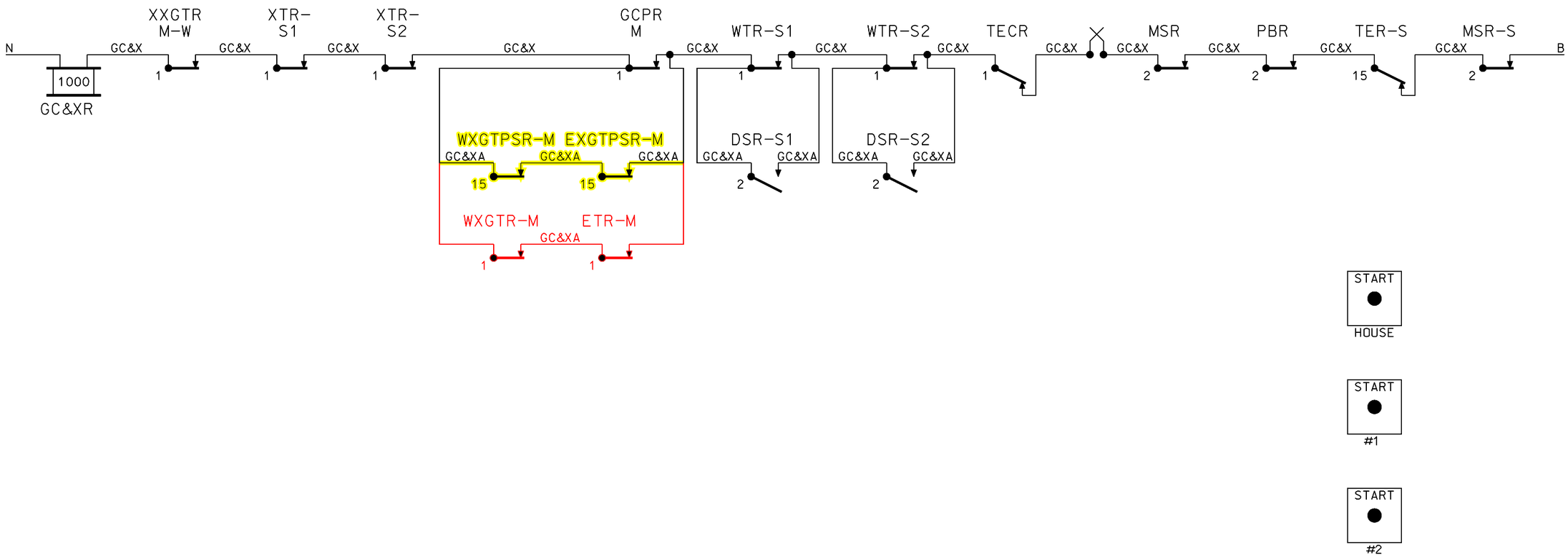

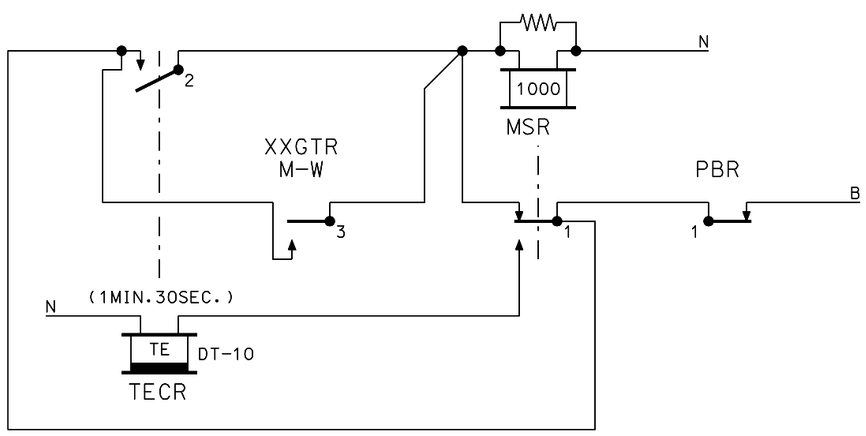

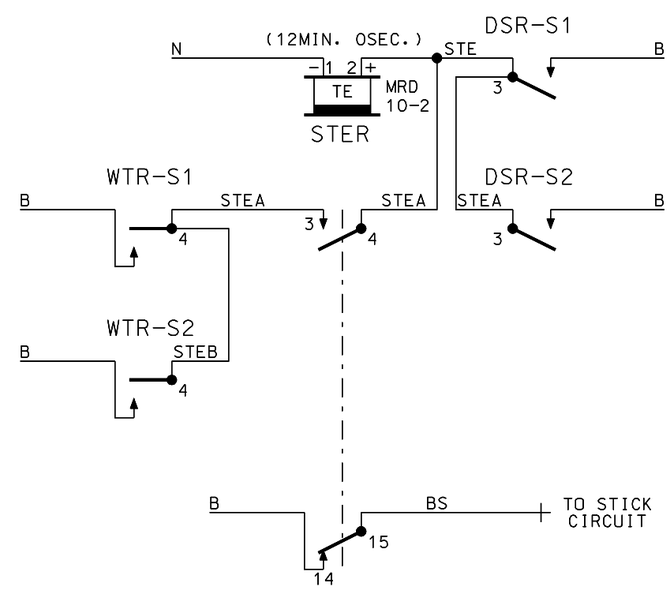

~REVISIONS~

YELLOW - IN
RED - OUT

RECORD
07/10/12

Metra SIGNAL ENGINEERING
CHICAGO, ILLINOIS

CHICAGO TO FOX LAKE
GRAND AVE
GC&XR & LOCAL CKTS.

REFERENCE:	DATE:
49.41 SH.1 THRU SH.9	07/10/12

DESIGNED	DRAWN	CHECKED	APPROVED

DISTRICT	PRINT NUMBER
MW/N	49.41 SH.4

12-DEC-2012 14:50

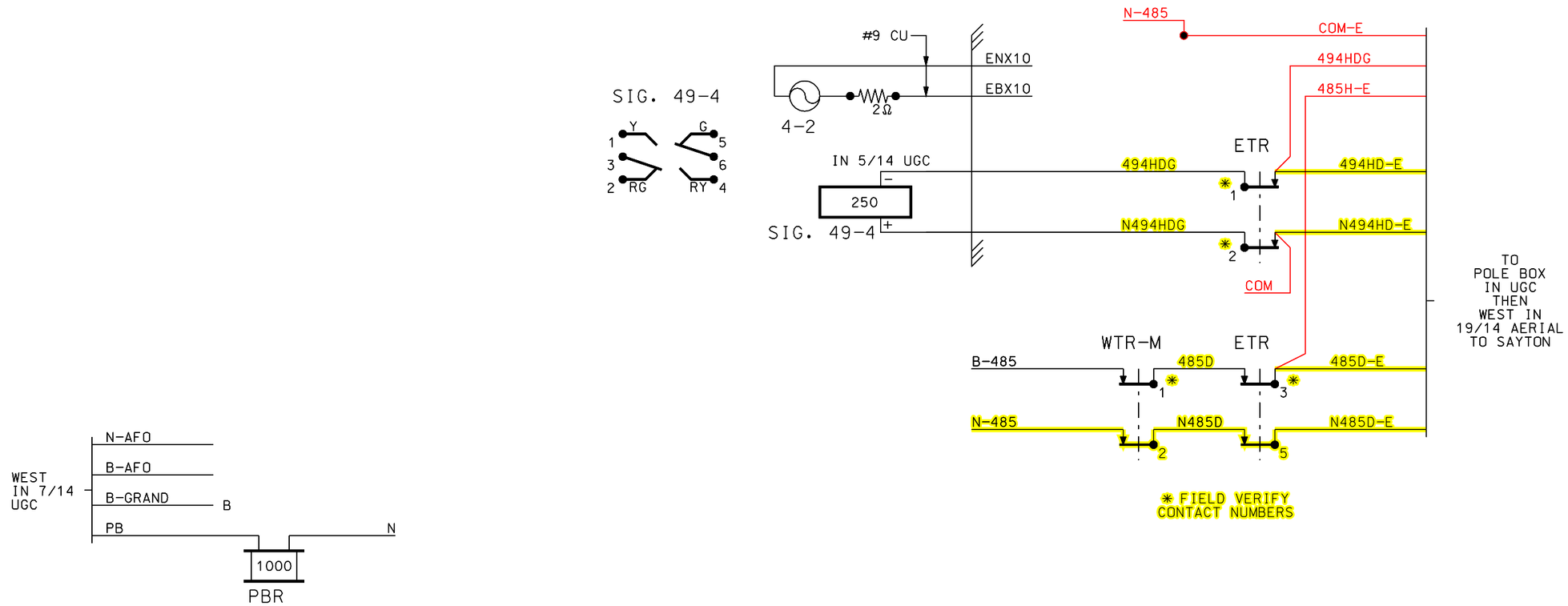

~REVISIONS~

YELLOW - IN
RED - OUT

RECORD
07/10/12

Metra SIGNAL ENGINEERING
CHICAGO, ILLINOIS

CHICAGO TO FOX LAKE
GRAND AVE
LINE CIRCUITS

REFERENCE:			DATE:
49.41 SH.1 THRU SH.9			07/10/12
DESIGNED	DRAWN	CHECKED	APPROVED
DM	DM	FCB	WPK
DISTRICT	PRINT NUMBER		
MW/N	49.41 SH.5		

12-DEC-2012 14:50

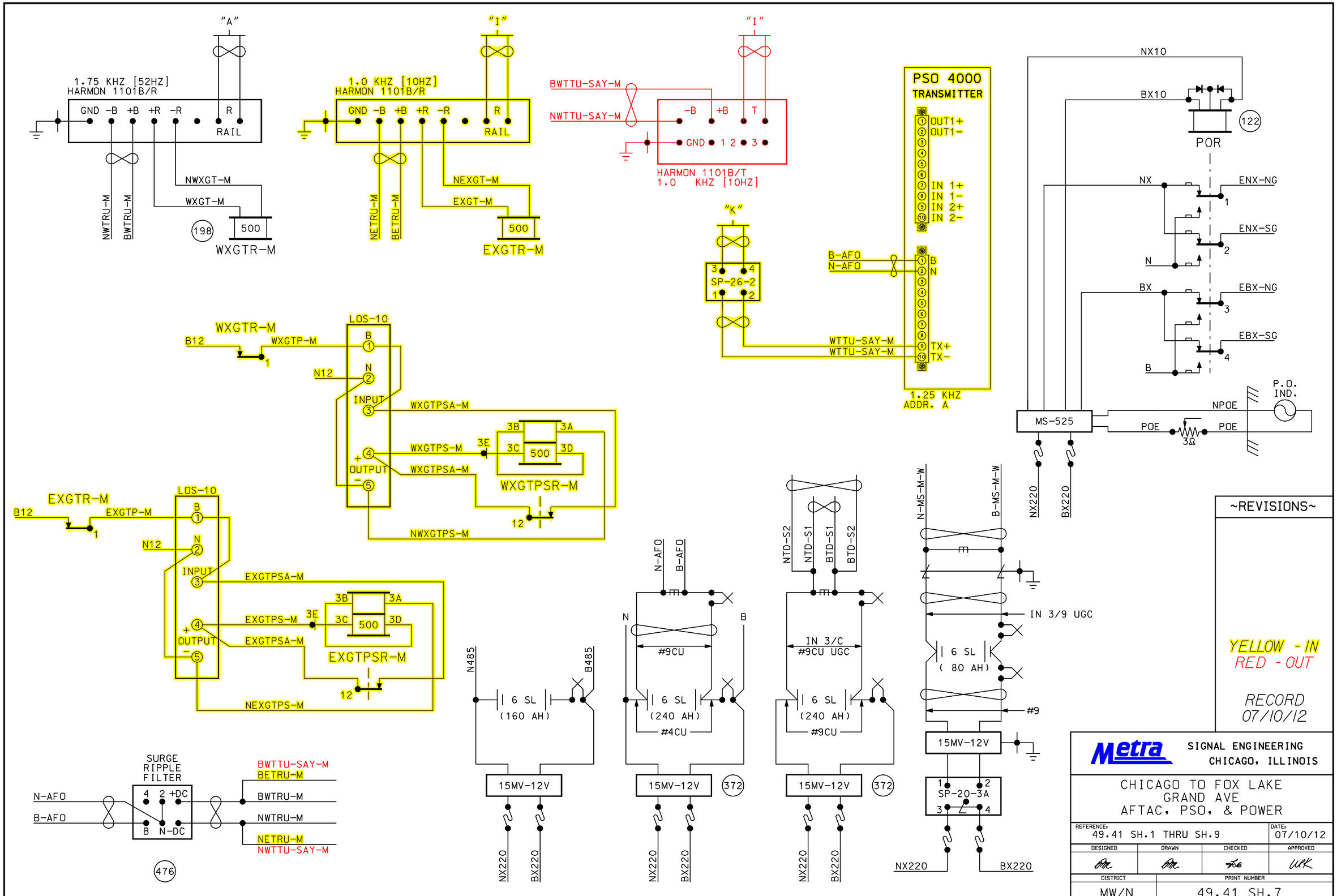

12-DEC-2012 14:50

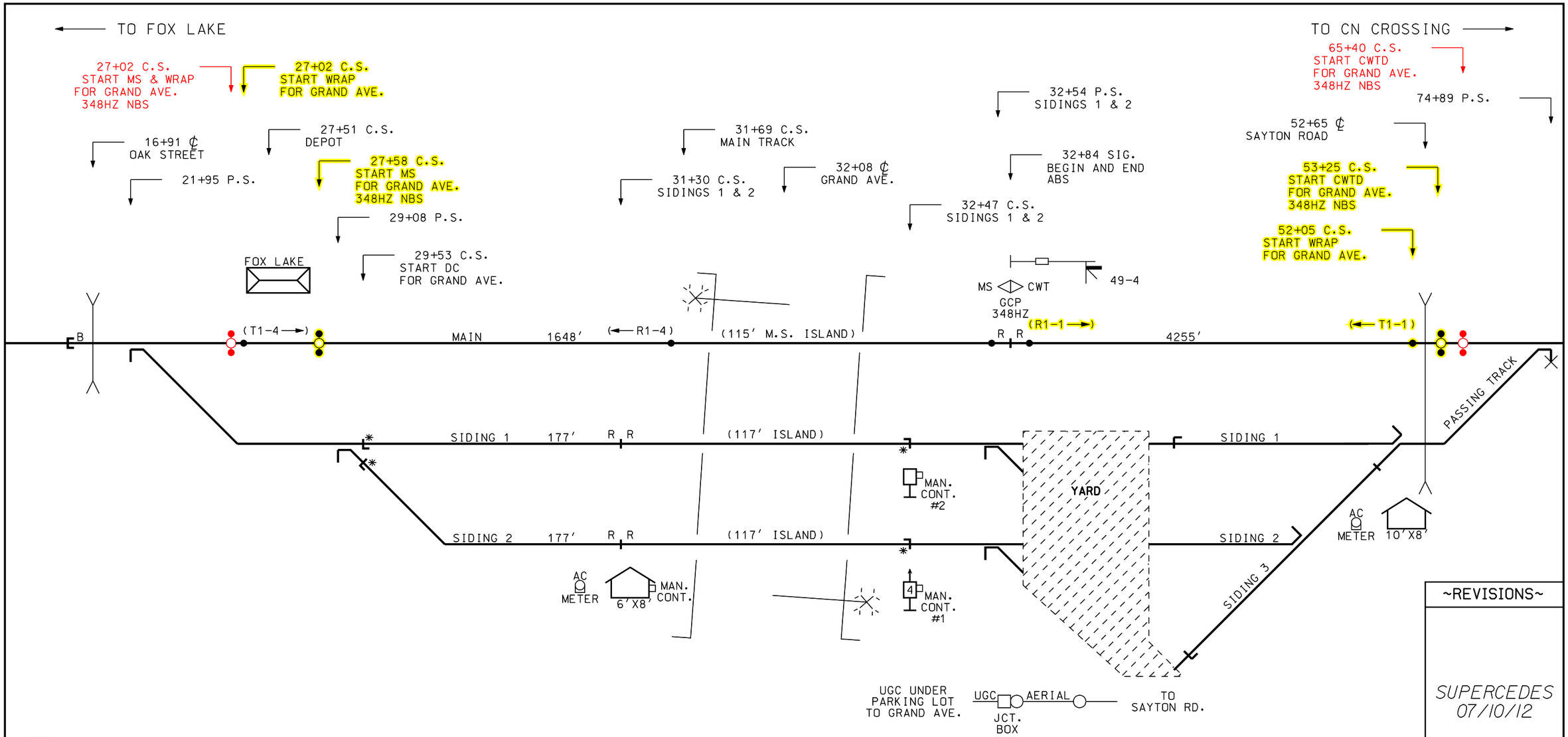

NOTES:

*	INDICATES E.P.C. RING-10 RECTIFIER
●○●	NARROW BAND SHUNT
▷	UNIDIRECTIONAL APPLICATION
GCP *** HZ	SAFETRAN GCP CROSSING PREDICTOR OPERATING FREQUENCY
MS	MOTION SENSING APPLICATION
CWTD	CONSTANT WARNING TIME DEVICE
(T1-1 →)	AFTAC TRANSMITTER
(R1-1 →)	AFTAC RECEIVER

EW APPROACH - MAIN AT 10 MPH		
MIN. WARNING TIME	=	22 SEC
WIDE XING TIME	=	0 SEC
REACTION TIME	=	5 SEC
RESPONSE TIME	=	5 SEC
APPROACH LENGTH	=	467 FT.

WW APPROACH - MAIN AT 60 MPH		
MIN. WARNING TIME	=	27 SEC
WIDE XING TIME	=	0 SEC
REACTION TIME	=	5 SEC
RESPONSE TIME	=	5 SEC
APPROACH LENGTH	=	3256 FT.

EW APPROACH - SIDING 1 & 2 AT 5 MPH		
MIN. WARNING TIME	=	20 SEC
REACTION TIME	=	5 SEC
RESPONSE TIME	=	0 SEC
APPROACH LENGTH	=	183 FT.

EW APPROACH - MAIN AT 10 MPH		
MIN. WARNING TIME	=	20 SEC
WIDE XING TIME	=	3 SEC
REACTION TIME	=	0 SEC
RESPONSE TIME	=	5 SEC
APPROACH LENGTH	=	411 FT.

WW APPROACH - MAIN AT 40 MPH		
MIN. WARNING TIME	=	20 SEC
WIDE XING TIME	=	3 SEC
REACTION TIME	=	5 SEC
RESPONSE TIME	=	5 SEC
APPROACH LENGTH	=	1936 FT.

EW APPROACH - SIDING 1 & 2 AT 5 MPH		
MIN. WARNING TIME	=	20 SEC
WIDE XING TIME	=	3 SEC
REACTION TIME	=	0 SEC
RESPONSE TIME	=	5 SEC
APPROACH LENGTH	=	211 FT.

~REVISIONS~

SUPERCEDES
07/10/12

YELLOW - IN
RED - OUT

RECORD
08/14/12

DOT#: 386-455X

Metra

SIGNAL ENGINEERING
CHICAGO, ILLINOIS

CHICAGO TO FOX LAKE
GRAND AVE
EXHIBIT

REFERENCE:			DATE:
49.41 SH.1 THRU SH.9			07/10/12
DESIGNED	DRAWN	CHECKED	APPROVED
BM	BM	LAB	WPK
DISTRICT	PRINT NUMBER		
MW/N	49.41 SH.9		

12-DEC-2012 14:50

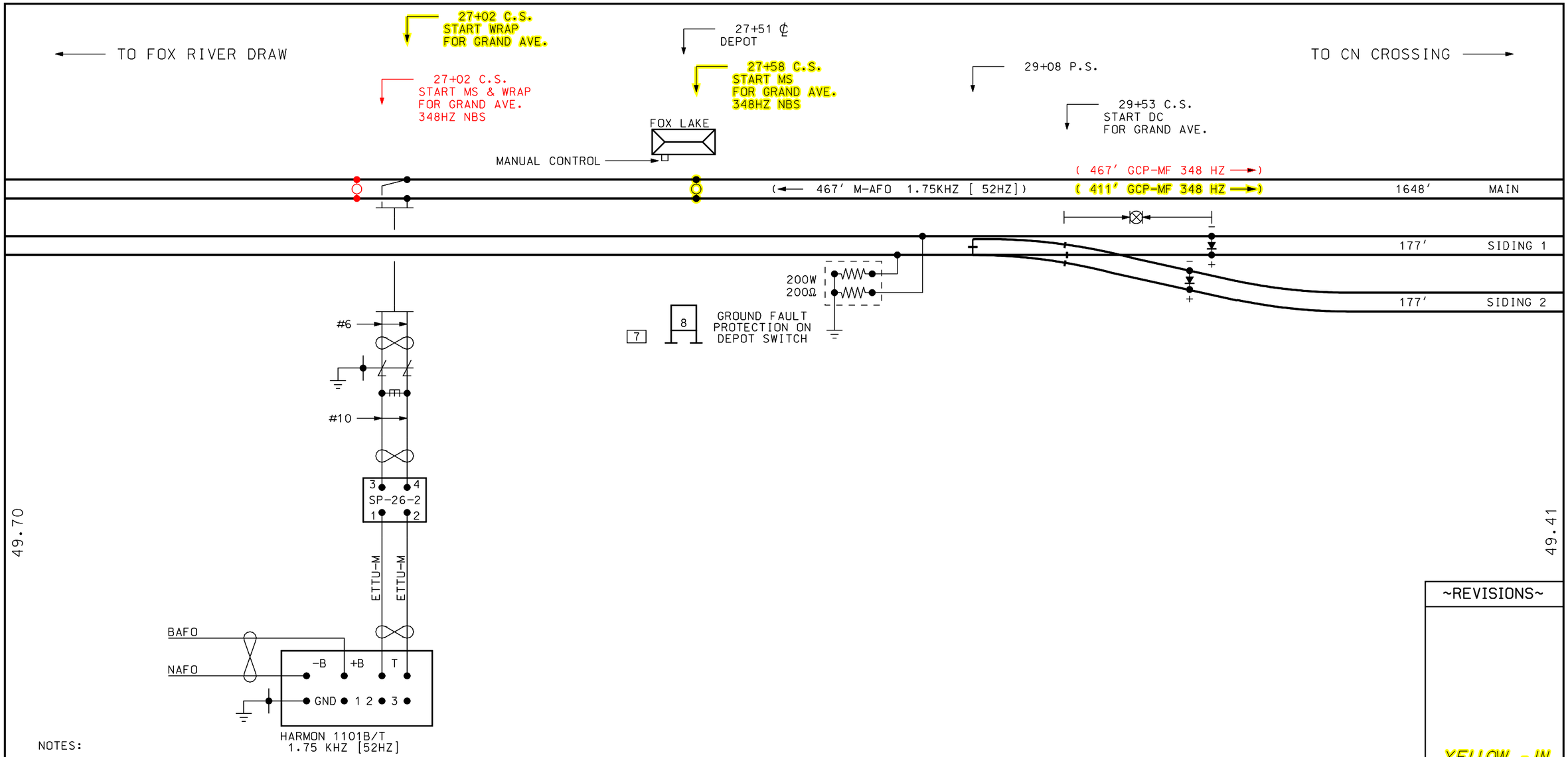

NOTES:

- NARROW BAND SHUNT
- INDICATES LEADS TO BE WELDED ON RAIL AS CLOSE TOGETHER AS POSSIBLE.
- TWISTED PAIR
- PRIME GROUND
- INDICATES E.P.C. RING-10 RECTIFIER
- (← 411′ GCP-MF 348 HZ)
  - FREQUENCY
  - LENGTH OF CIRCUIT
  - DIRECTION TO TRANSMITTER

~REVISIONS~

YELLOW - IN
RED - OUT

RECORD
07/10/12

Metra SIGNAL ENGINEERING
CHICAGO, ILLINOIS

CHICAGO TO FOX LAKE
FOX LAKE DEPOT
PLAN VIEW

REFERENCE: 49.50 SH.1 THRU SH.2			DATE: 07/10/12
DESIGNED	DRAWN	CHECKED	APPROVED
BM	BM	JCB	WPK
DISTRICT	PRINT NUMBER		
MW/N	49.50 SH.1		

12-DEC-2012 14:50