TK.1 = TK. MAIN
TK.2 = TK. DISABLE

ADJUST SEL

APPROACH LENGTH:
TK.1 - 2046'
TK.2 - '

WARNING TIME:
TK.1 - 27 SEC.
TK.2 - SEC.

MD RESTART:
TK.1 - 0
TK.2 -

OPTIONS

1. TK-ENA:
TK.1 - UP
TK.2 - dn

2. TK FO
TK.1 - STRAP
TK.2 -

3. CW/MD
TK.1 - C
TK.2 -

4. UNI-BI
TK.1 - b
TK.2 -

6. CWEWT
TK.1 - 80
TK.2 -

7. LOS
TK.1 - 16
TK.2 -

8. IJ-LOS
TK.1 - 5
TK.2 -

11. AX 1
TK-ASN -
OF-TK -
WT -
MD-RST -
CW/MD -
CJ-LOS -
PJ-DET -
POS-ST -

12. AX 2
TK-ASN -
OF-TK -
WT -
MD-RST -
CW/MD -
CJ-LOS -
PJ-DET -
POS-ST -

13. AX 3
TK-ASN -
OF-TK -
WT -
MD-RST -
CW/MD -
CJ-LOS -
PJ-DET -
POS-ST -

17. MDR-AX - n
OF-TK -
CJ-LOS -
PJ-DET -

18. MD-TMR
TK.1 - 10
TK.2 -

19. MIN-WT - 0

20. FS-DET - 0

48. PF-ENA - UP

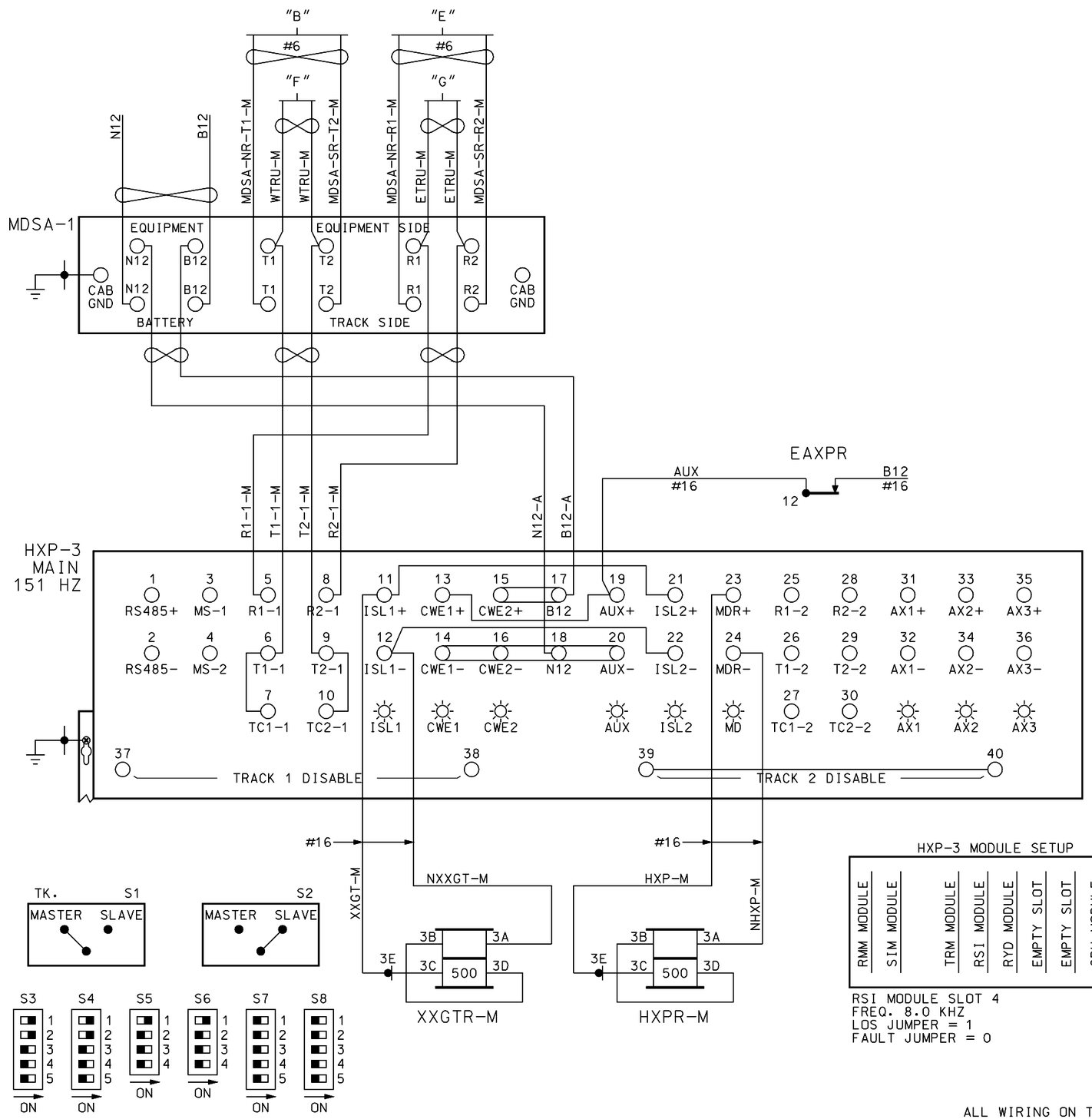

HXP-3 MODULE SETUP

RMM MODULE	SIM MODULE		TRM MODULE	RSI MODULE	RYD MODULE	EMPTY SLOT	EMPTY SLOT	CPU MODULE	EMPTY SLOT

RSI MODULE SLOT 4
FREQ. 8.0 KHZ
LOS JUMPER = 1
FAULT JUMPER = 0

ALL WIRING ON THIS SHEET
#10 AWG UNLESS NOTED

~REVISIONS~

THIS SHEET
ALL NEW

RECORD
07/10/12

Metra SIGNAL ENGINEERING
CHICAGO, ILLINOIS

CHICAGO TO FOX LAKE
SAYTON ROAD
HXP-3 MAIN TK

REFERENCE:			DATE:
49.02 SH.1 THRU SH.11			07/10/12
DESIGNED	DRAWN	CHECKED	APPROVED
BM	BM	JCB	WPK
DISTRICT	PRINT NUMBER		
MW/N	49.02 SH.3		

12-DEC-2012 14:49

TK.1 = TK. SIDE
TK.2 = TK. DISABLE

ADJUST SEL

APPROACH LENGTH:
TK.1 - 436'
TK.2 - '

WARNING TIME:
TK.1 - 27 SEC.
TK.2 - SEC.

MD RESTART:
TK.1 - 0
TK.2 -

OPTIONS

1. TK-ENA:
TK.1 - UP
TK.2 - dn

2. TK FO
TK.1 - STRAP
TK.2 -

3. CW/MD
TK.1 - d
TK.2 -

4. UNI-BI
TK.1 - b
TK.2 -

6. CWEWT
TK.1 - 80
TK.2 -

7. LOS
TK.1 - 16
TK.2 -

8. IJ-LOS
TK.1 - 5
TK.2 -

11. AX 1
TK-ASN -
OF-TK -
WT -
MD-RST -
CW/MD -
CJ-LOS -
PJ-DET -
POS-ST -

12. AX 2
TK-ASN -
OF-TK -
WT -
MD-RST -
CW/MD -
CJ-LOS -
PJ-DET -
POS-ST -

13. AX 3
TK-ASN -
OF-TK -
WT -
MD-RST -
CW/MD -
CJ-LOS -
PJ-DET -
POS-ST -

17. MDR-AX - n
OF-TK -
CJ-LOS -
PJ-DET -

18. MD-TMR
TK.1 - 10
TK.2 -

19. MIN-WT - 0

20. FS-DET - 0

48. PF-ENA - UP

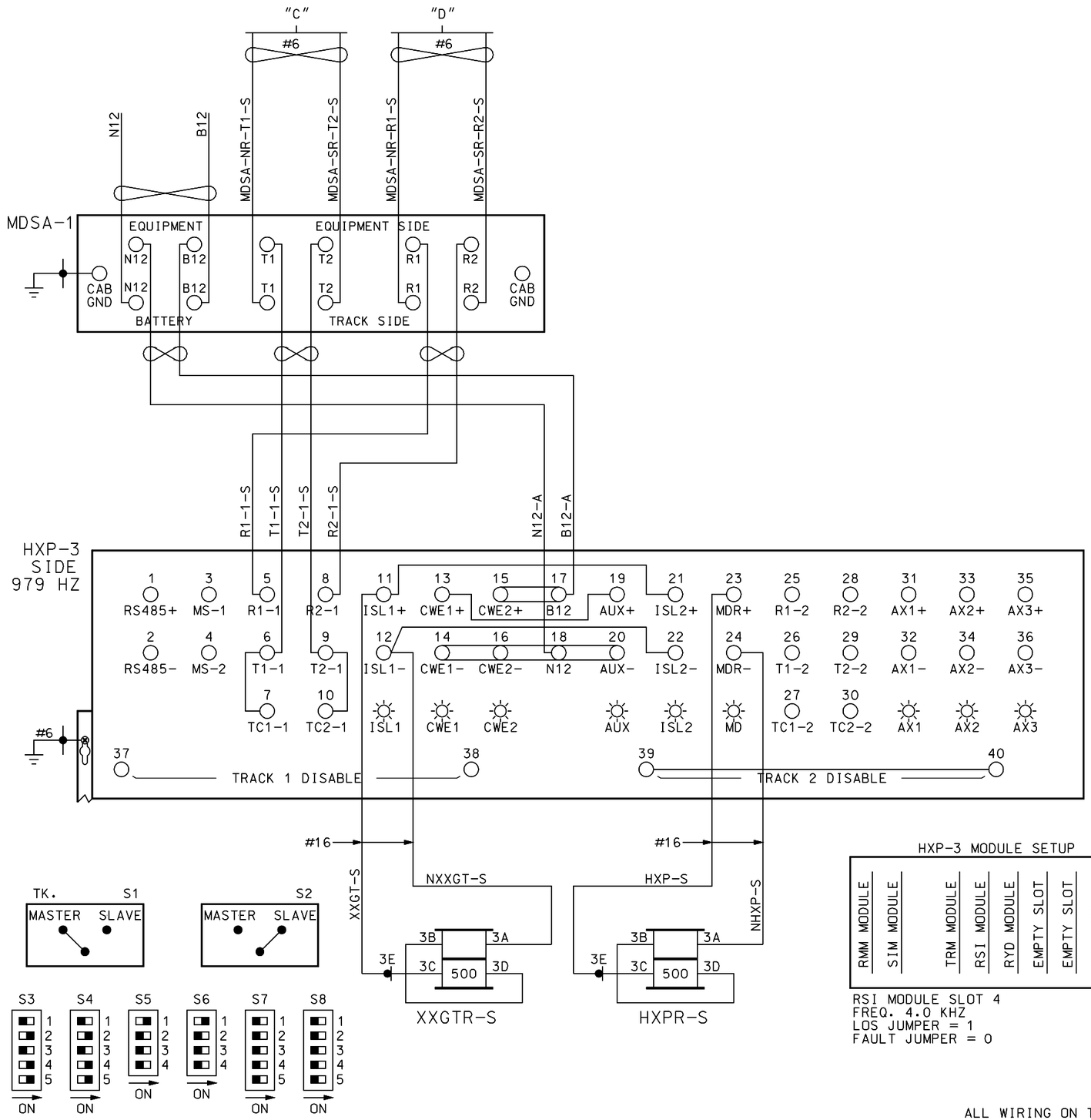

HXP-3 MODULE SETUP

RMM MODULE	SIM MODULE	TRM MODULE	RSI MODULE	RYD MODULE	EMPTY SLOT	EMPTY SLOT	CPU MODULE	EMPTY SLOT

RSI MODULE SLOT 4
FREQ. 4.0 KHZ
LOS JUMPER = 1
FAULT JUMPER = 0

ALL WIRING ON THIS SHEET
#10 AWG UNLESS NOTED

~REVISIONS~

THIS SHEET ALL NEW

SUPERCEDES 07/10/12

RECORD 11/19/12

Metra SIGNAL ENGINEERING CHICAGO, ILLINOIS

CHICAGO TO FOX LAKE
SAYTON ROAD
HXP-3 SIDING TK

REFERENCE:	DATE:
49.02 SH.1 THRU SH.11	07/10/12

DESIGNED	DRAWN	CHECKED	APPROVED
BM	BM	JGB	WPK

DISTRICT	PRINT NUMBER
MW/N	49.02 SH.4

12-DEC-2012 14:49

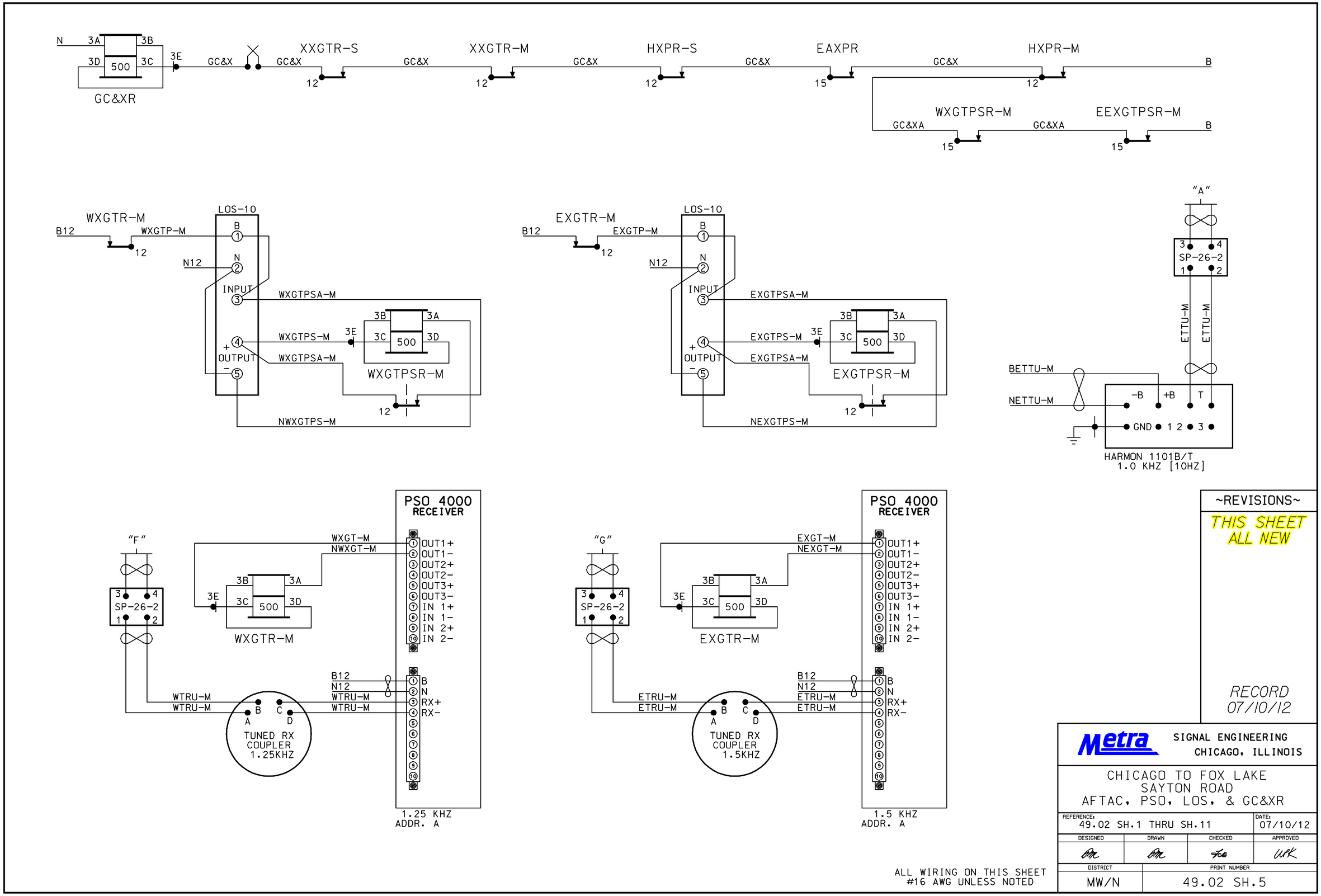

~REVISIONS~

THIS SHEET
ALL NEW

RECORD
07/10/12

Metra SIGNAL ENGINEERING
CHICAGO, ILLINOIS

CHICAGO TO FOX LAKE
SAYTON ROAD
AFTAC, PSO, LOS, & GC&XR

REFERENCE:			DATE:
49.02 SH.1 THRU SH.11			07/10/12
DESIGNED	DRAWN	CHECKED	APPROVED
			WPK
DISTRICT	PRINT NUMBER		
MW/N	49.02 SH.5		

ALL WIRING ON THIS SHEET
#16 AWG UNLESS NOTED

12-DEC-2012 14:49

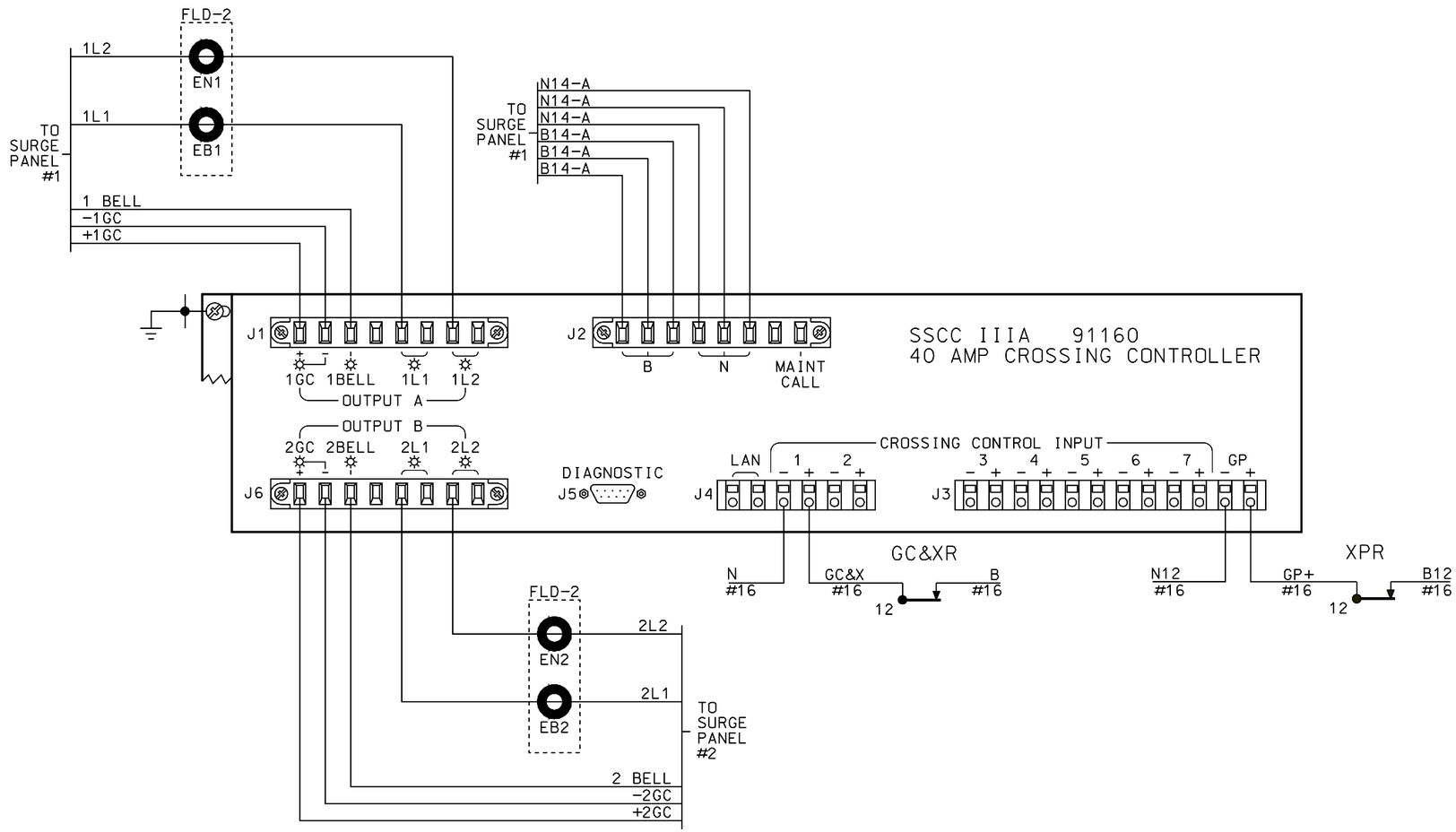

~REVISIONS~

THIS SHEET ALL NEW

RECORD 07/10/12

PROGRAM FLASH RATE: 55 PER MIN
PROGRAM 1GC DELAY: 3 SEC
PROGRAM 2GC DELAY: 3 SEC
PROGRAM BELL-ON GATE RISING: YES
PROGRAM ENABLED INPUTS: 1 THRU 1
PROGRAM ENABLED OUTPUTS: A AND B
PROGRAM LOW BATTERY: DISABLED

ALL WIRING ON THIS SHEET
#10 AWG UNLESS NOTED

Metra SIGNAL ENGINEERING
CHICAGO, ILLINOIS

CHICAGO TO FOX LAKE
SAYTON ROAD
CROSSING CONTROLLER

REFERENCE:			DATE:
49.02 SH.1 THRU SH.11			07/10/12
DESIGNED	DRAWN	CHECKED	APPROVED
BM	BM	TGB	WPK
DISTRICT	PRINT NUMBER		
MW/N	49.02 SH.6		

12-DEC-2012 14:49

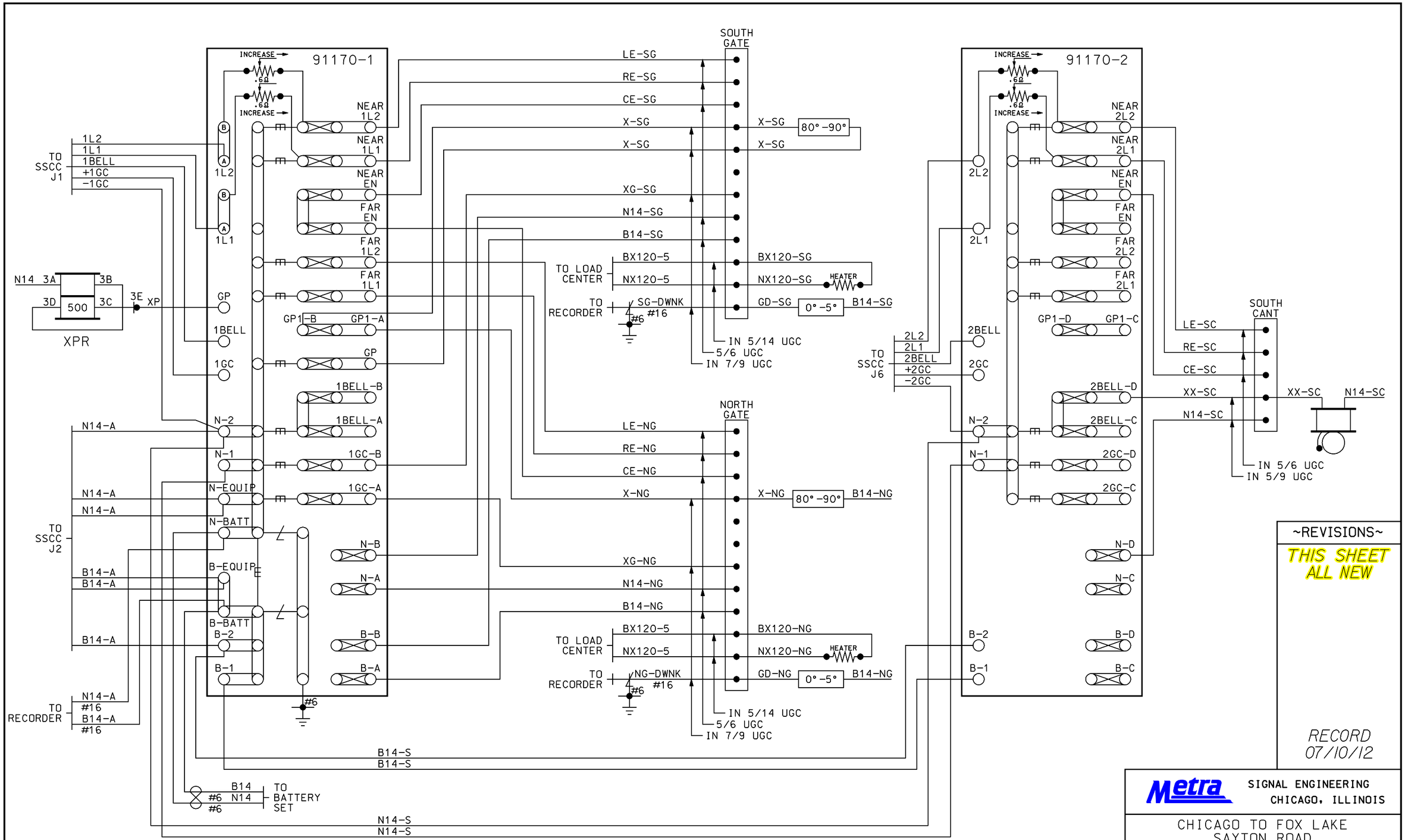

ALL WIRING ON THIS SHEET
#10 AWG UNLESS NOTED

~REVISIONS~

THIS SHEET
ALL NEW

RECORD
07/10/12

Metra

SIGNAL ENGINEERING
CHICAGO, ILLINOIS

CHICAGO TO FOX LAKE
SAYTON ROAD
LIGHTING / SURGE PANELS

REFERENCE:			DATE:
49.02 SH.1 THRU SH.11			07/10/12
DESIGNED	DRAWN	CHECKED	APPROVED
BM	BM	JCB	WPK
DISTRICT	PRINT NUMBER		
MW/N	49.02 SH.7		

12-DEC-2012 14:49

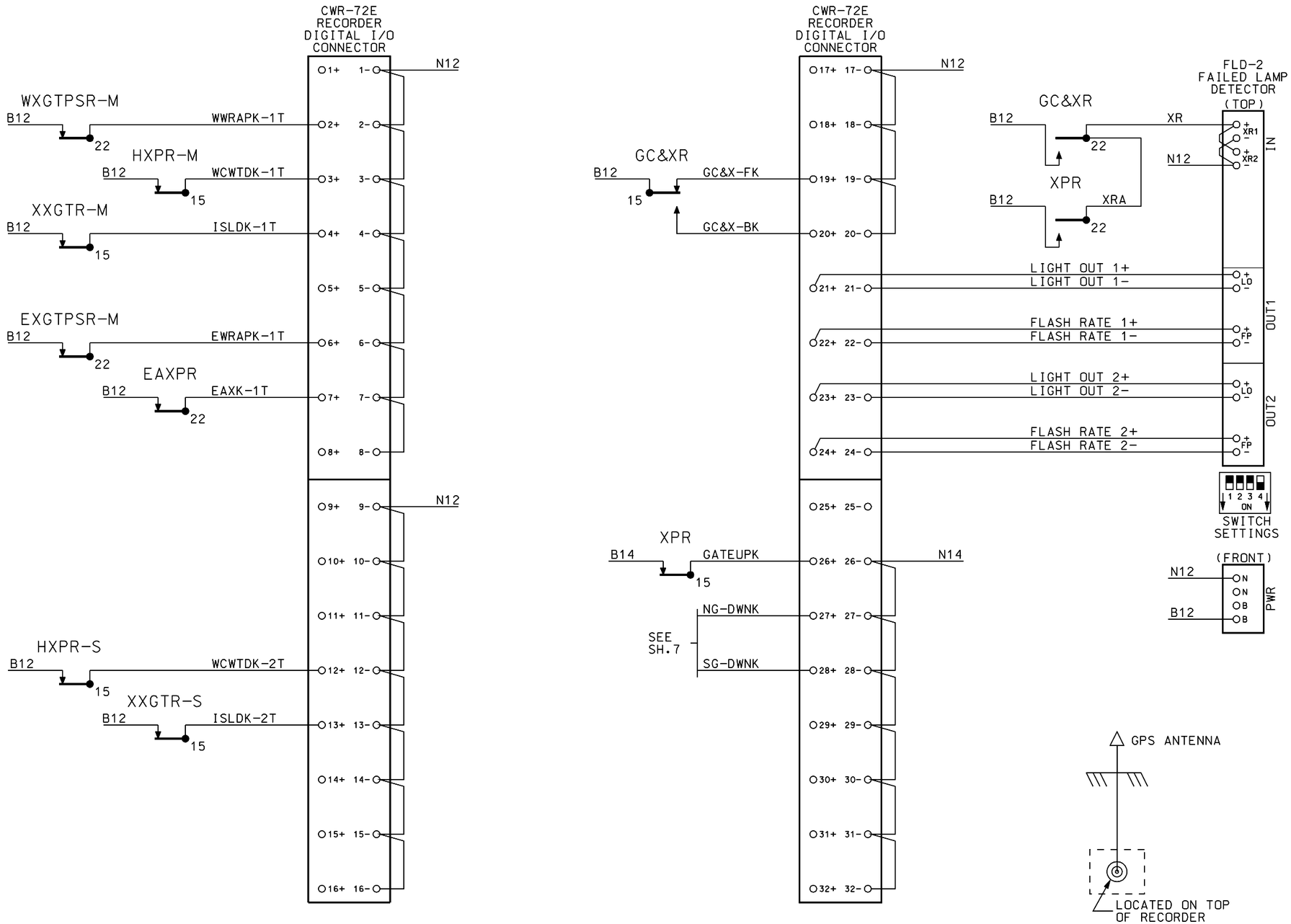

ALL WIRING ON THIS SHEET
#16 AWG UNLESS NOTED

~REVISIONS~

THIS SHEET ALL NEW

RECORD
07/10/12

Metra SIGNAL ENGINEERING
CHICAGO, ILLINOIS

CHICAGO TO FOX LAKE
SAYTON ROAD
EVENT RECORDER

REFERENCE: 49.02 SH.1 THRU SH.11			DATE: 07/10/12
DESIGNED	DRAWN	CHECKED	APPROVED
DISTRICT	PRINT NUMBER		
MW/N	49.02 SH.8		

12-DEC-2012 14:49

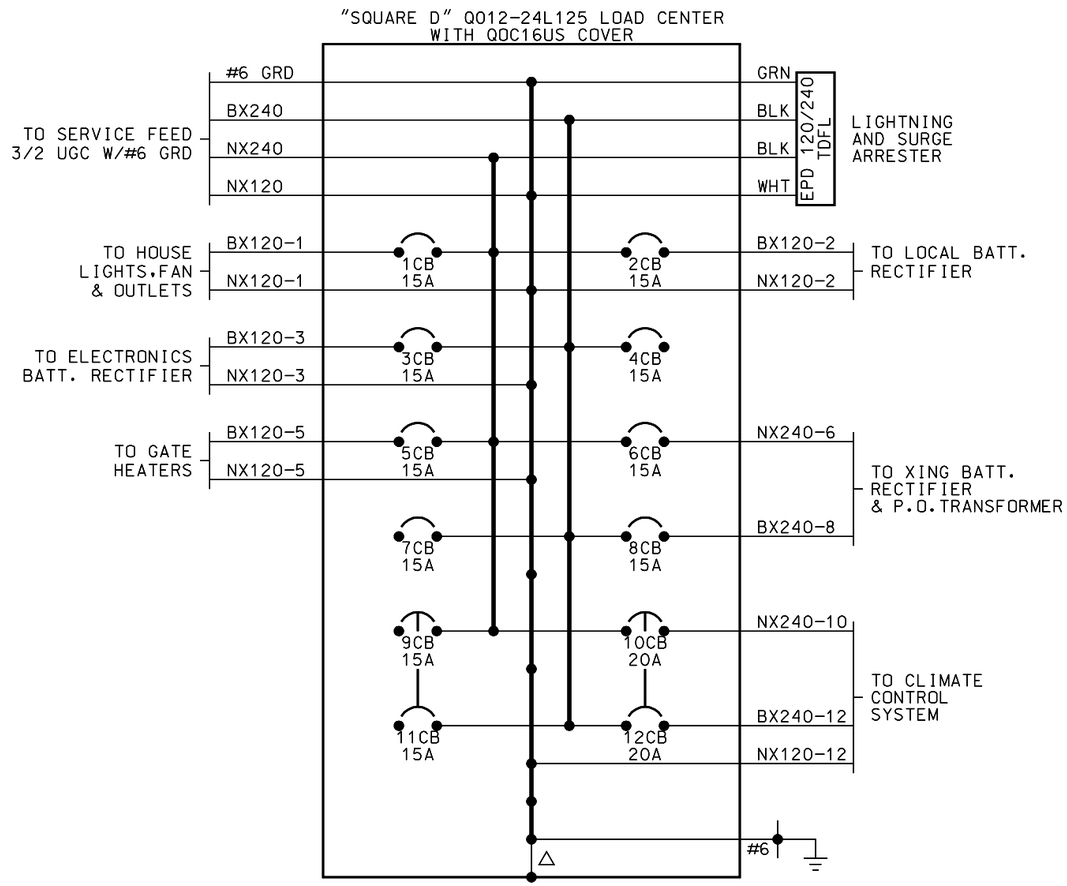

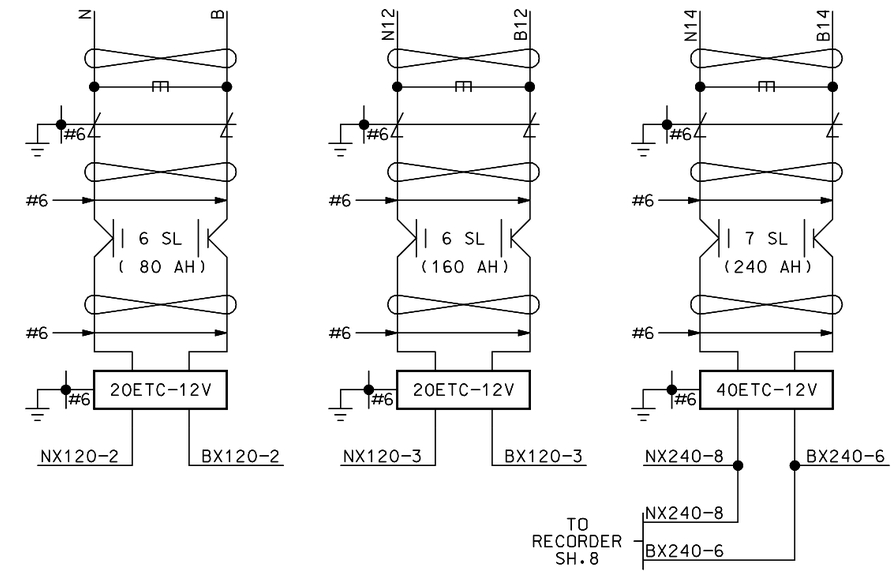

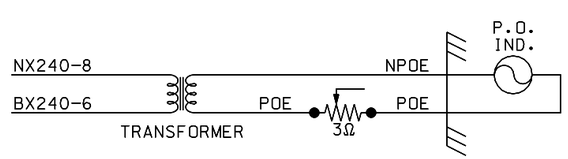

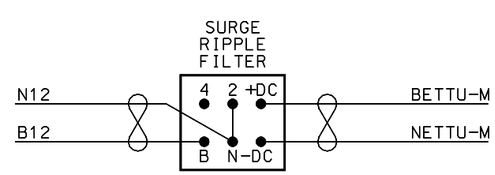

NOTES:

ALL AC POWERED EQUIPMENT SHALL BE GROUNDED WITH GREEN 6 AWG ETFE TO PRIME GROUND.

△ METAL LOAD CENTER HOUSING TO BE GROUNDED TO NEUTRAL BUS USING LONG SCREW PROVIDED.

ONE WIRE TO EACH CB. A MAXIMUM OF TWO MAY BE USED IF NECESSARY.

RUN ALL LOAD CENTER WIRES THROUGH INSULATED GROMMETS.

ALL WIRING ON THIS SHEET
#10 AWG UNLESS NOTED

~REVISIONS~

THIS SHEET
ALL NEW

RECORD
07/10/12

Metra SIGNAL ENGINEERING
CHICAGO, ILLINOIS

CHICAGO TO FOX LAKE
SAYTON ROAD
POWER DISTRIBUTION

REFERENCE: 49.02 SH.1 THRU SH.11			DATE: 07/10/12
DESIGNED	DRAWN	CHECKED	APPROVED
BM	BM	JCB	WPK
DISTRICT	PRINT NUMBER		
MW/N	49.02 SH.9		

12-DEC-2012 14:49

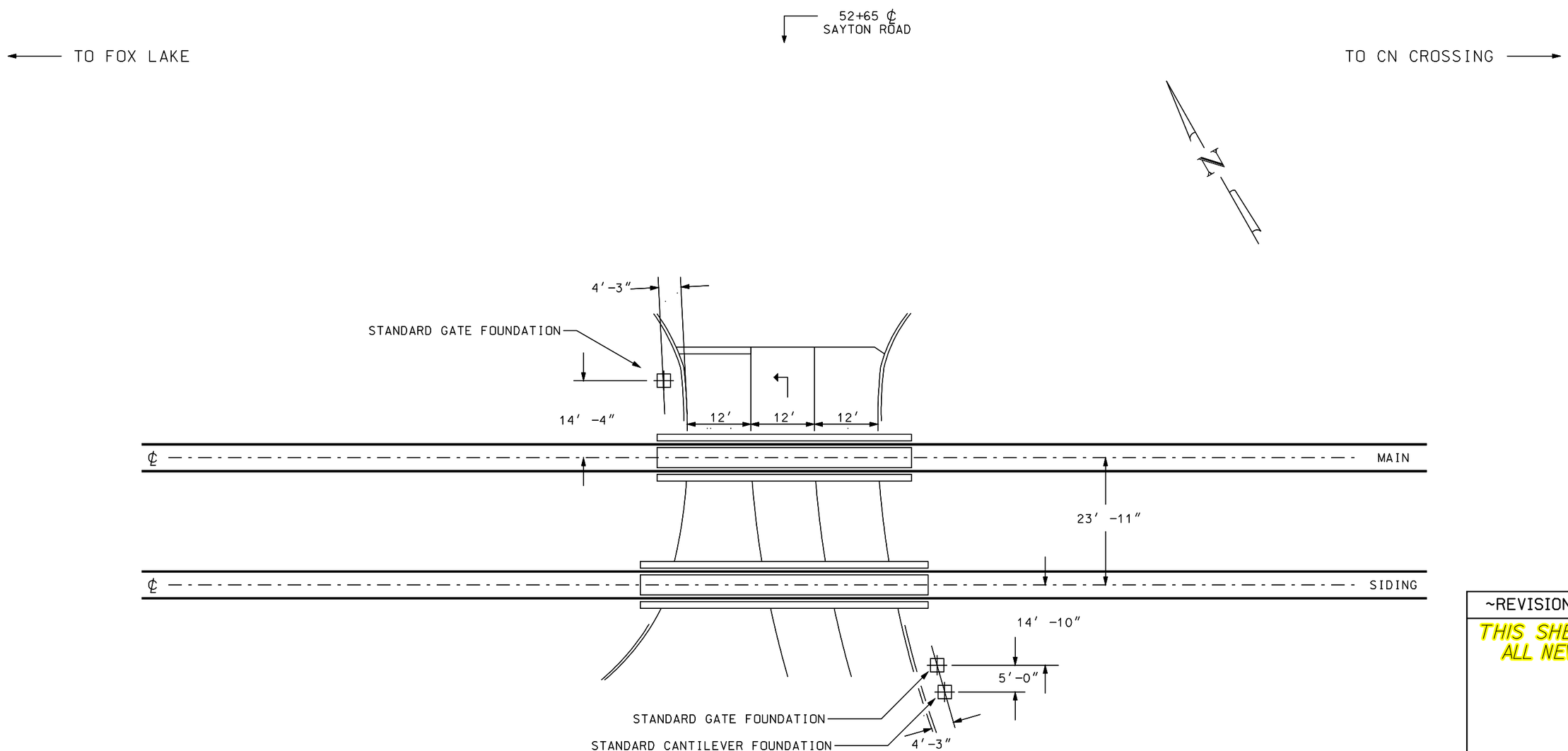

ENLARGED VIEW OF CROSSING
SHOWING LOCATION OF SIGNAL FOUNDATIONS
~ NOT TO SCALE ~

RELAY HOUSE TO BE LOCATED A MINIMUM OF
30 FEET FROM THE EDGE OF THE NEAREST TRAFFIC LANE
AND AN ADEQUATE DISTANCE FROM TRACK IN ORDER TO
REDUCE OBSTRUCTION TO MOTORIST'S SIGHT DISTANCE.

~REVISIONS~

THIS SHEET
ALL NEW

RECORD
07/10/12

DOT#: 386-453J

Metra SIGNAL ENGINEERING
CHICAGO, ILLINOIS

CHICAGO TO FOX LAKE
SAYTON ROAD
ENLARGED VIEW

REFERENCE: 49.02 SH.1 THRU SH.11			DATE: 07/10/12
DESIGNED	DRAWN	CHECKED	APPROVED
BM	BM	JCB	WPK
DISTRICT	PRINT NUMBER		
MW/N	49.02 SH.10		

12-DEC-2012 14:49

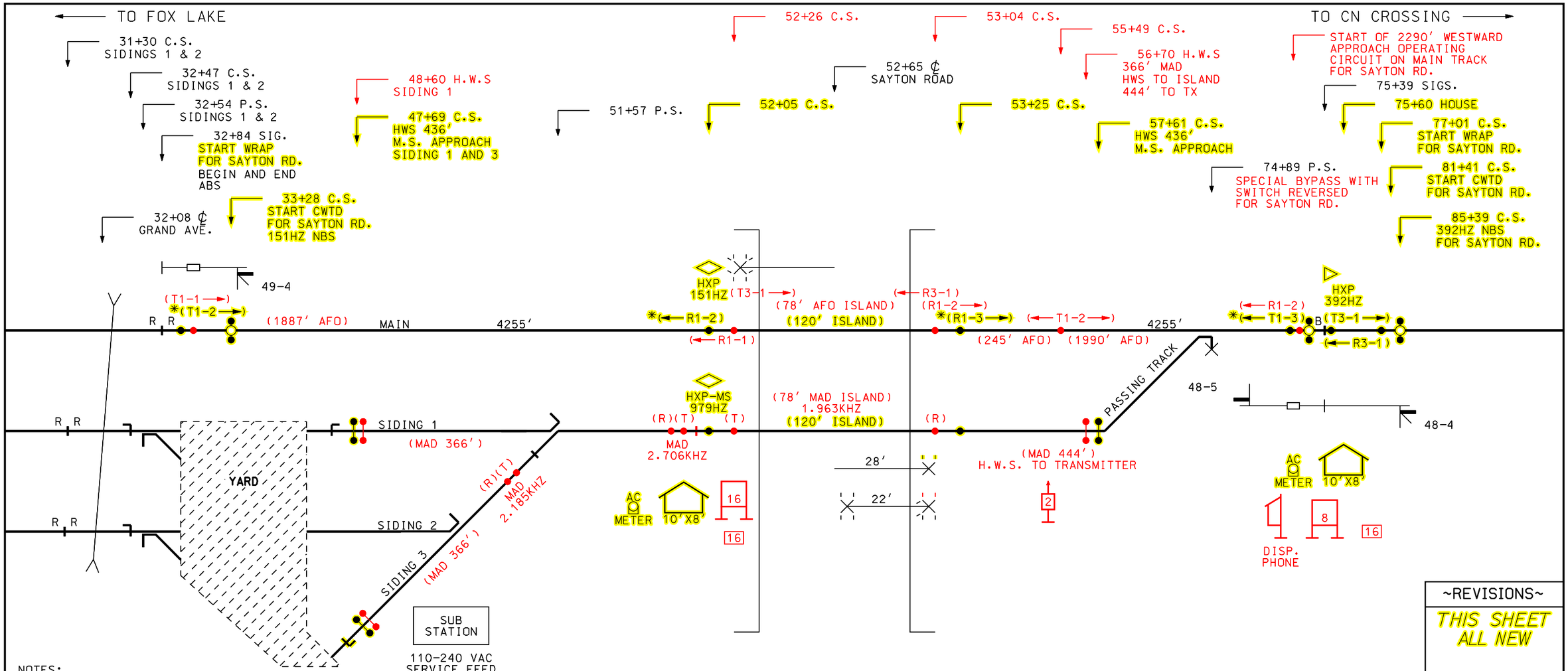

NOTES:

●○●	NARROW BAND SHUNT
▷	SEMI-BIDIRECTIONAL APPLICATION
◇	BIDIRECTIONAL APPLICATION
●|●	HARD WIRE SHUNT
HXP *** HZ	HARMON CROSSING PROCESSOR OPERATING FREQUENCY
CWTD	CONSTANT WARNING TIME DEVICE
(T1-1 →)	AFTAC TRANSMITTER
(R1-1 →)	AFTAC RECEIVER
*(T)	PSO 4000 TRANSMITTER
*(R)	PSO 4000 RECEIVER

WW APPROACH - MAIN AT 60 MPH		
MIN. WARNING TIME	=	22 SEC
REACTION TIME	=	3 SEC
APPROACH LENGTH	=	2235 FT.

EW APPROACH - MAIN AT 50 MPH		
MIN. WARNING TIME	=	23 SEC
REACTION TIME	=	3 SEC
APPROACH LENGTH	=	1942 FT.

WW & EW APPROACH - SIDINGS AT 10 MPH		
MIN. WARNING TIME	=	22 SEC
REACTION TIME	=	3 SEC
APPROACH LENGTH	=	366 FT.

WW APPROACH - MAIN AT 60 MPH		
MIN. WARNING TIME	=	20 SEC
WIDE XING TIME	=	2 SEC
REACTION TIME	=	5 SEC
RESPONSE TIME	=	5 SEC
APPROACH LENGTH	=	2816 FT.

EW APPROACH - MAIN AT 40 MPH		
MIN. WARNING TIME	=	20 SEC
WIDE XING TIME	=	2 SEC
REACTION TIME	=	5 SEC
RESPONSE TIME	=	5 SEC
APPROACH LENGTH	=	1877 FT.

WW & EW APPROACH - SIDINGS AT 10 MPH		
MIN. WARNING TIME	=	20 SEC
WIDE XING TIME	=	2 SEC
REACTION TIME	=	5 SEC
RESPONSE TIME	=	0 SEC
APPROACH LENGTH	=	436 FT.

~REVISIONS~

THIS SHEET
ALL NEW

SUPERCEDES
07/10/12

YELLOW - IN
RED - OUT

RECORD
11/19/12

DOT#: 386-453J

Metra
SIGNAL ENGINEERING
CHICAGO, ILLINOIS

CHICAGO TO FOX LAKE
SAYTON ROAD
EXHIBIT

REFERENCE:			DATE:
49.02 SH.1 THRU SH.11			07/10/12
DESIGNED	DRAWN	CHECKED	APPROVED
BM	BM	SGB	WPK
DISTRICT	PRINT NUMBER		
MW/N	49.02 SH.11		

12-DEC-2012 14:49