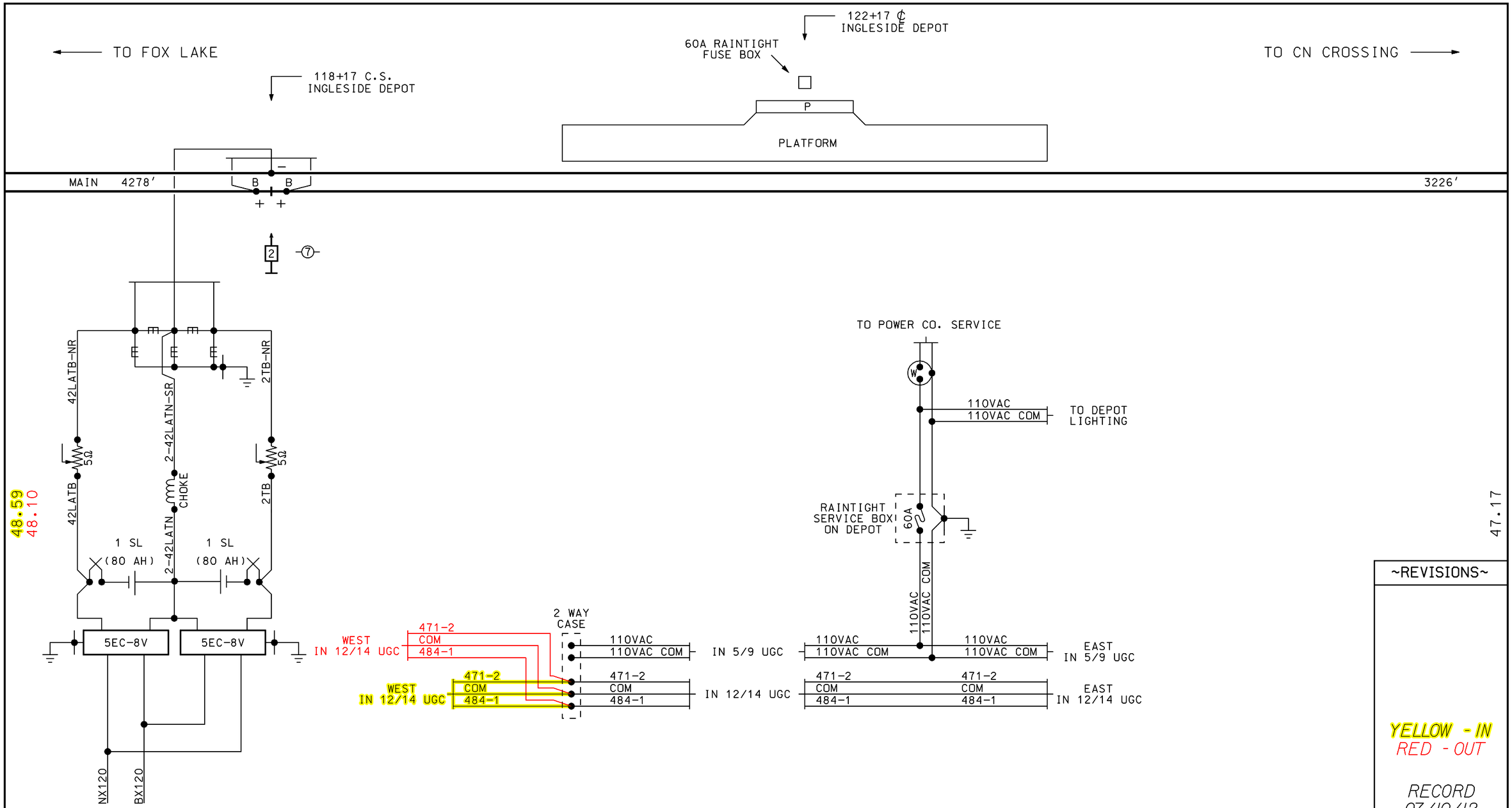

~REVISIONS~

YELLOW - IN
RED - OUT

RECORD
07/10/12

Metra SIGNAL ENGINEERING
CHICAGO, ILLINOIS

CHICAGO TO FOX LAKE
INGLESIDE DEPOT
PLAN VIEW

REFERENCE:			DATE: 07/10/12
DESIGNED	DRAWN	CHECKED	APPROVED
[signature]	[signature]	[signature]	[signature]
DISTRICT	PRINT NUMBER		
MW/N	47.20 SH.1		

12-DEC-2012 14:48

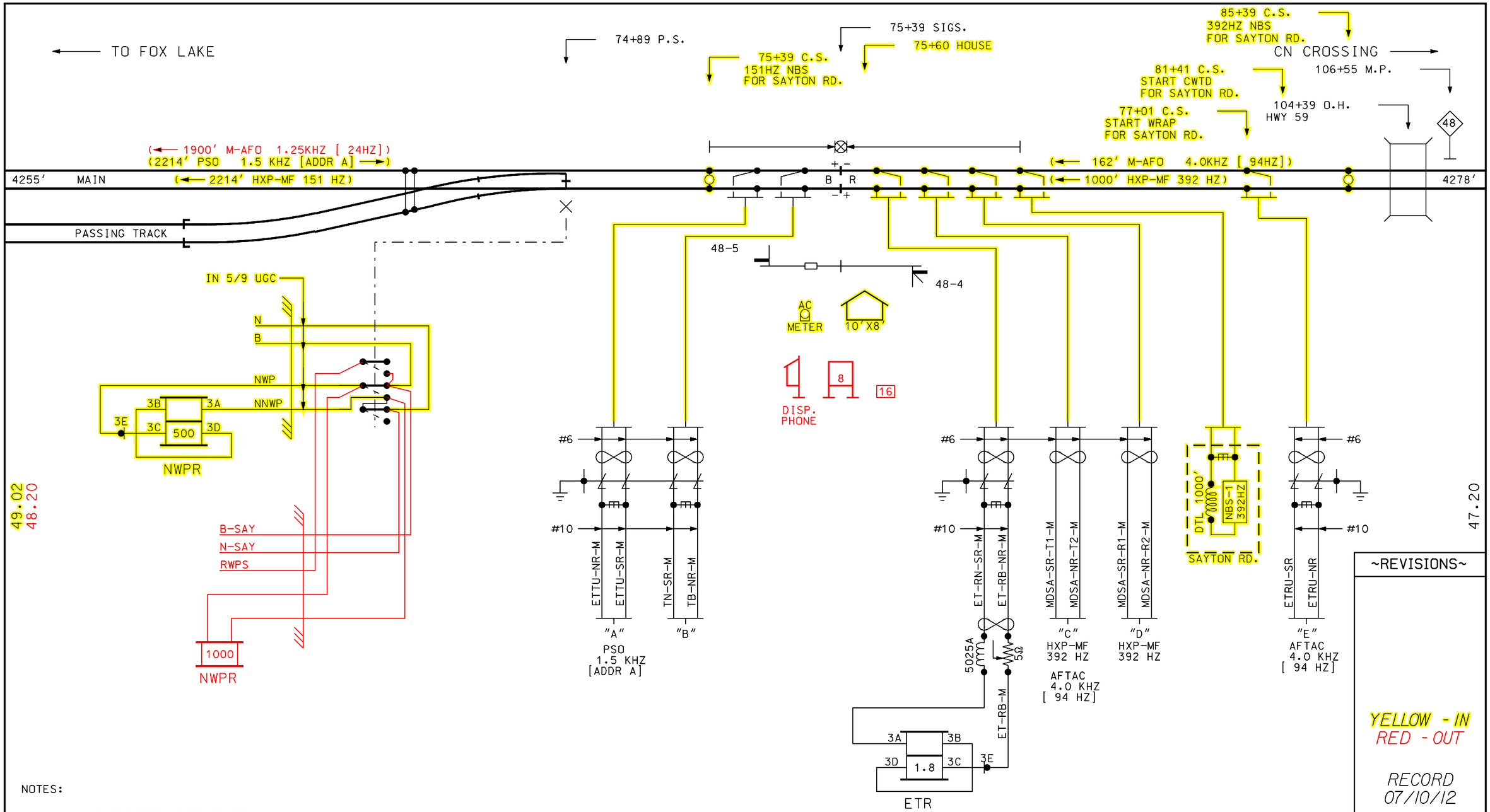

NOTES:

INDICATES LEADS TO BE WELDED ON RAIL AS CLOSE TOGETHER AS POSSIBLE.

TWISTED PAIR

PRIME GROUND

(← 1000' HXP-MF 392 HZ)

- FREQUENCY
- LENGTH OF CIRCUIT
- DIRECTION TO TRANSMITTER

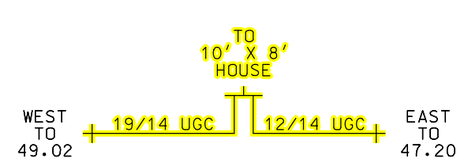

ALL WIRING ON THIS SHEET
#10 AWG UNLESS NOTED

~REVISIONS~

YELLOW - IN
RED - OUT

RECORD
07/10/12

Metra SIGNAL ENGINEERING
CHICAGO, ILLINOIS

CHICAGO TO FOX LAKE
SIGS. & DAX LOCATION
PLAN VIEW

REFERENCE:			DATE:
48.59 SH.1 THRU SH.5			07/10/12
DESIGNED	DRAWN	CHECKED	APPROVED
			WPK
DISTRICT	PRINT NUMBER		
MW/N	48.59 SH.1		

12-DEC-2012 14:48

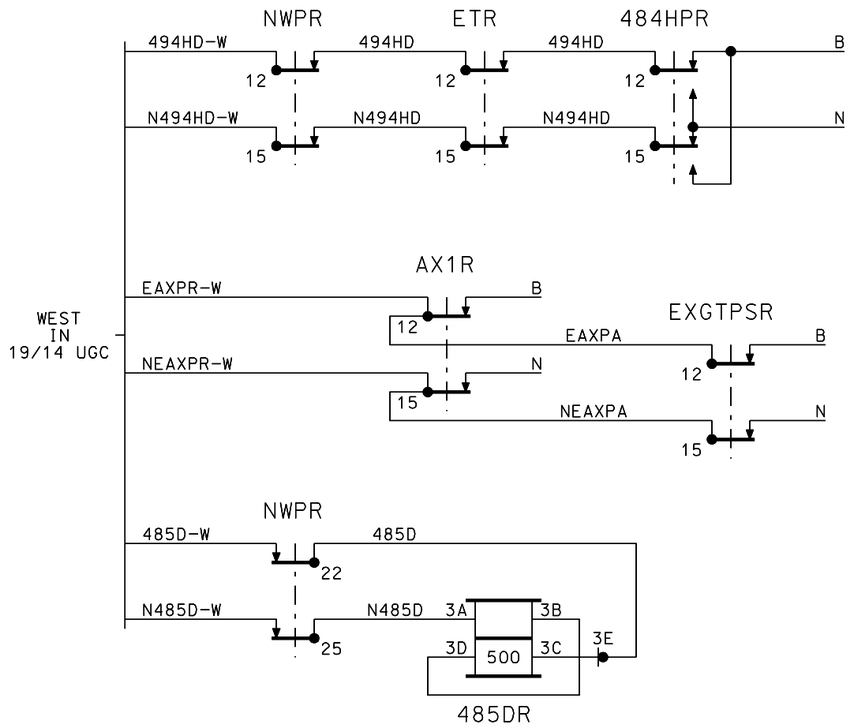

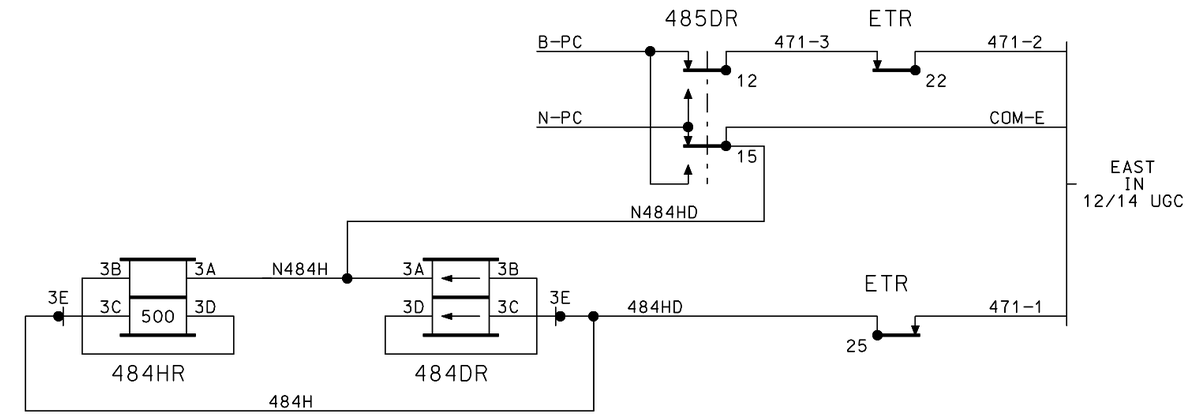

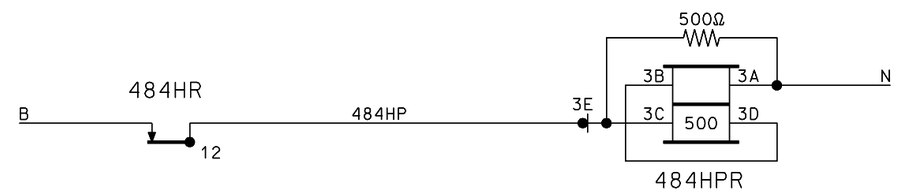

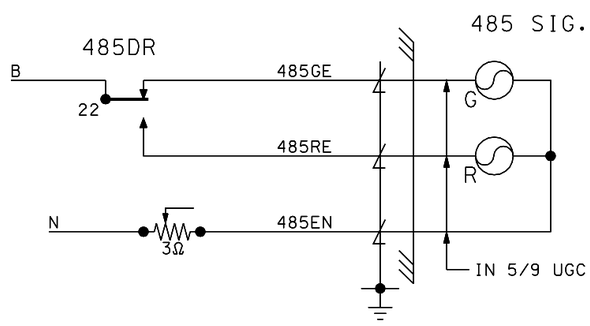

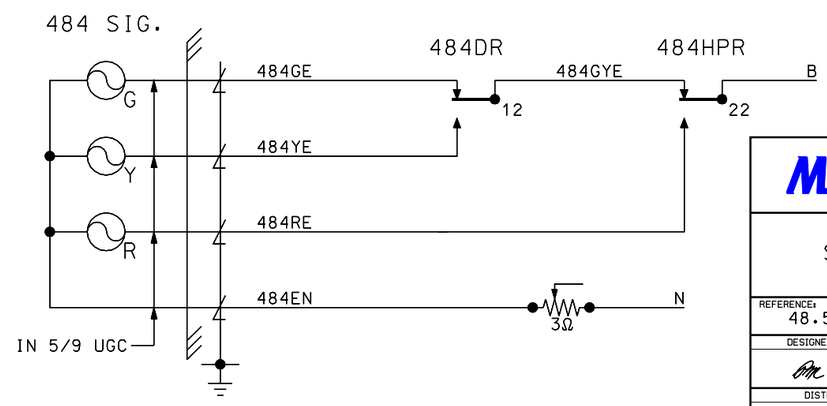

~REVISIONS~

THIS SHEET
ALL NEW

RECORD
07/10/12

Metra SIGNAL ENGINEERING
CHICAGO, ILLINOIS

CHICAGO TO FOX LAKE
SIGS. & DAX LOCATION
LINE CKTS & SIGNALS

REFERENCE: 48.59 SH.1 THRU SH.5			DATE: 07/10/12
DESIGNED	DRAWN	CHECKED	APPROVED
			WPK
DISTRICT	PRINT NUMBER		
MW/N	48.59 SH.2		

12-DEC-2012 14:48

TK.1 = TK.
TK.2 = TK. DISABLE

ADJUST SEL

APPROACH LENGTH:
TK.1 - 1000'
TK.2 - '

WARNING TIME:
TK.1 - 27 SEC.
TK.2 - SEC.

MD RESTART:
TK.1 - 0
TK.2 -

OPTIONS

1. TK-ENA:
TK.1 - UP
TK.2 - dn

2. TK FO
TK.1 - STRAP
TK.2 -

3. CW/MD
TK.1 - C
TK.2 -

4. UNI-BI
TK.1 - b
TK.2 -

6. CWEWT
TK.1 - 80
TK.2 -

7. LOS
TK.1 - 16
TK.2 -

8. IJ-LOS
TK.1 - 5
TK.2 -

11. AX 1
TK-ASN - 1T
OF-TK - 2214'
WT - 27
MD-RST -
CW/MD - C
CJ-LOS - 0
PJ-DET - 15
POS-ST - dn

12. AX 2
TK-ASN -
OF-TK -
WT -
MD-RST -
CW/MD -
CJ-LOS -
PJ-DET -
POS-ST -

13. AX 3
TK-ASN -
OF-TK -
WT -
MD-RST -
CW/MD -
CJ-LOS -
PJ-DET -
POS-ST -

17. MDR-AX - n
OF-TK -
CJ-LOS -
PJ-DET -

18. MD-TMR
TK.1 - 10
TK.2 -

19. MIN-WT - 0

20. FS-DET - 0

48. PF-ENA - UP

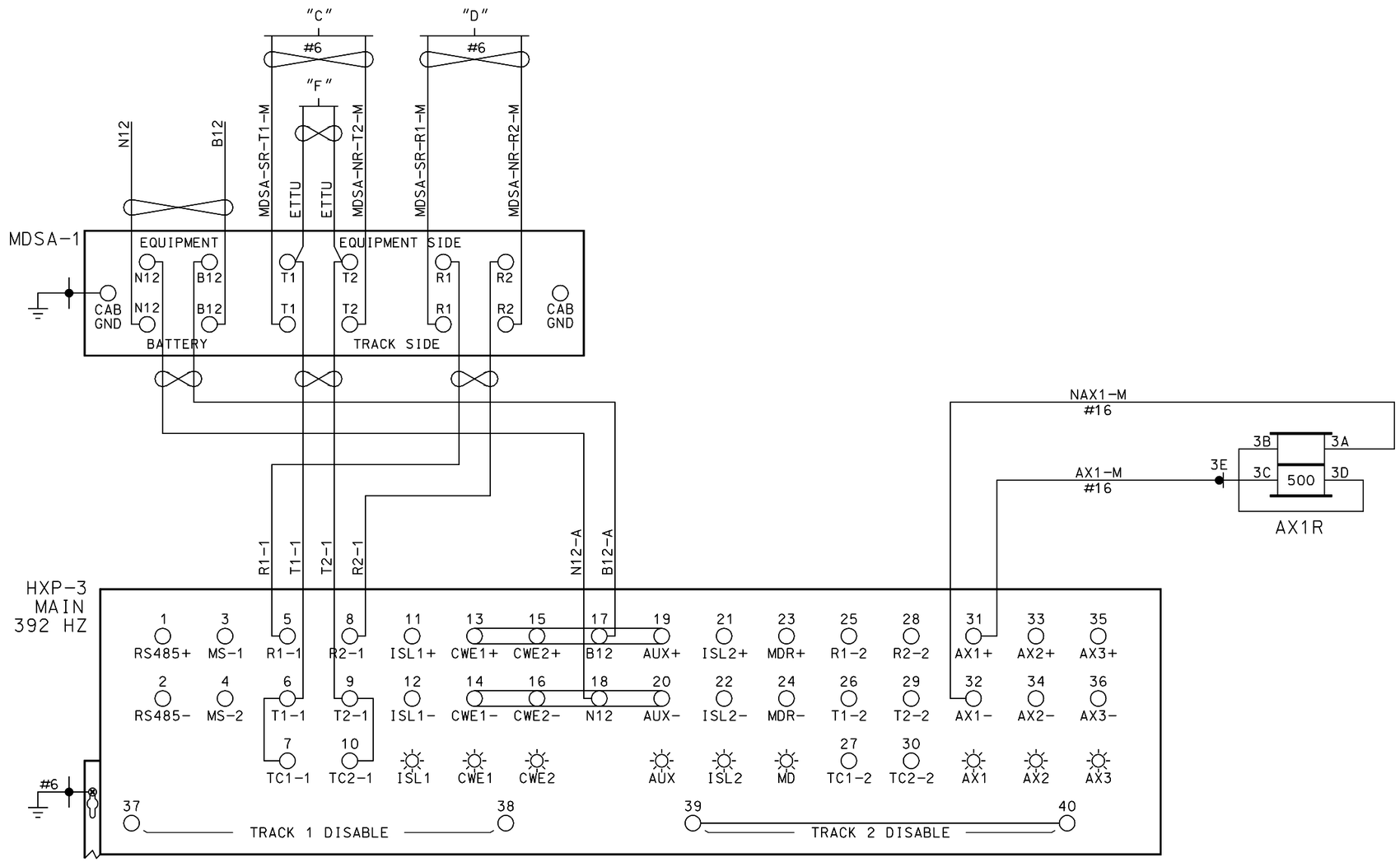

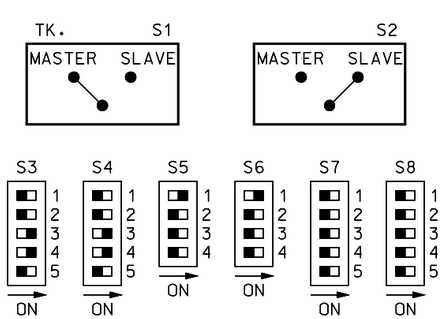

HXP-3 MODULE SETUP

RMM MODULE	SIM MODULE		TRM MODULE	EMPTY SLOT	RYD MODULE	EMPTY SLOT	CPU MODULE	AXD MODULE

RSI MODULE SLOT N/A
FREQ. N/A KHZ
LOS JUMPER = 1
FAULT JUMPER = 0

ALL WIRING ON THIS SHEET
#10 AWG UNLESS NOTED

~REVISIONS~

THIS SHEET
ALL NEW

SUPERCEDES
07/10/12

RECORD
11/19/12

Metra SIGNAL ENGINEERING
CHICAGO, ILLINOIS

CHICAGO TO FOX LAKE
SIGS. & DAX LOCATION
HXP-3

REFERENCE:	DATE:
48.59 SH.1 THRU SH.5	07/10/12

DESIGNED	DRAWN	CHECKED	APPROVED
BM	BM	JGB	WPK

DISTRICT	PRINT NUMBER
MW/N	48.59 SH.3

12-DEC-2012 14:48

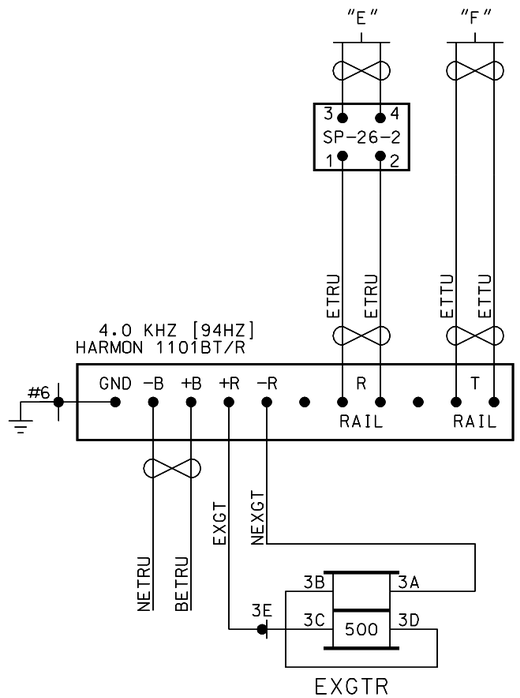

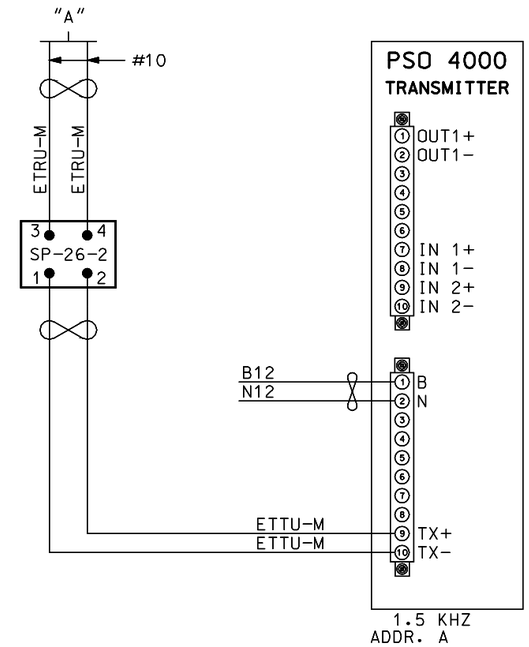

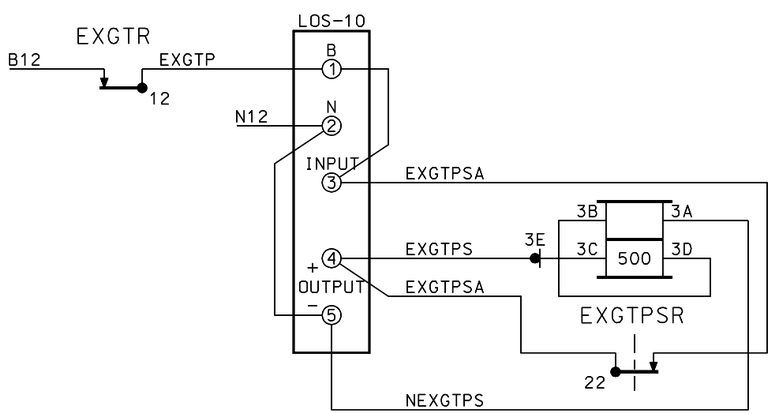

~REVISIONS~

THIS SHEET
ALL NEW

RECORD
07/10/12

Metra SIGNAL ENGINEERING
CHICAGO, ILLINOIS

CHICAGO TO FOX LAKE
SIGS. & DAX LOCATION
AFTAC & PSO 4000

REFERENCE:			DATE:
48.59 SH.1 THRU SH.5			07/10/12
DESIGNED	DRAWN	CHECKED	APPROVED
DISTRICT	PRINT NUMBER		
MW/N	48.59 SH.4		

ALL WIRING ON THIS SHEET
#16 AWG UNLESS NOTED

12-DEC-2012 14:48

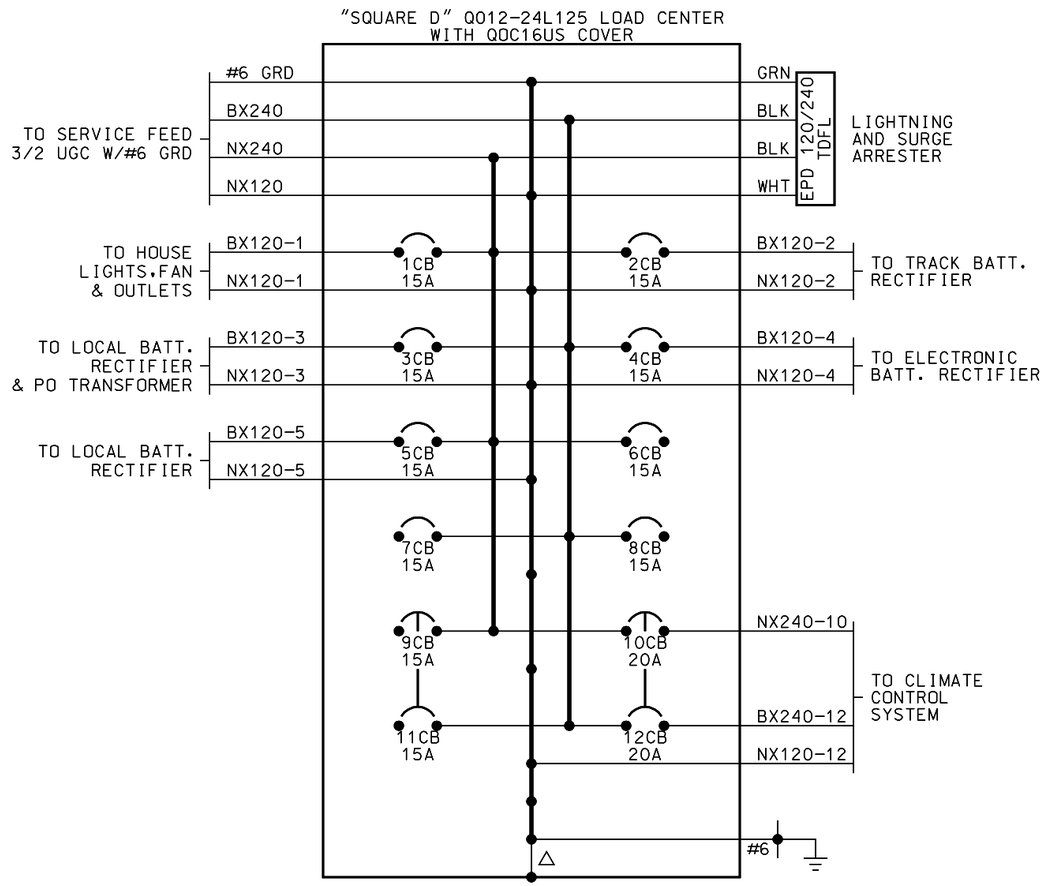

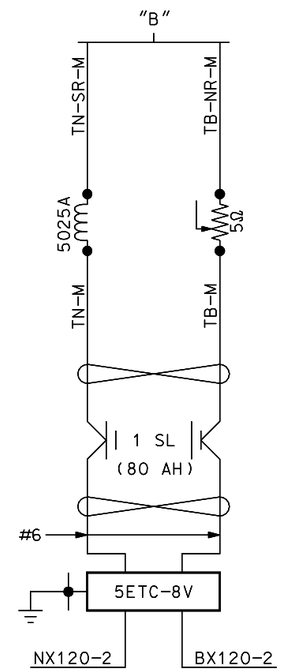

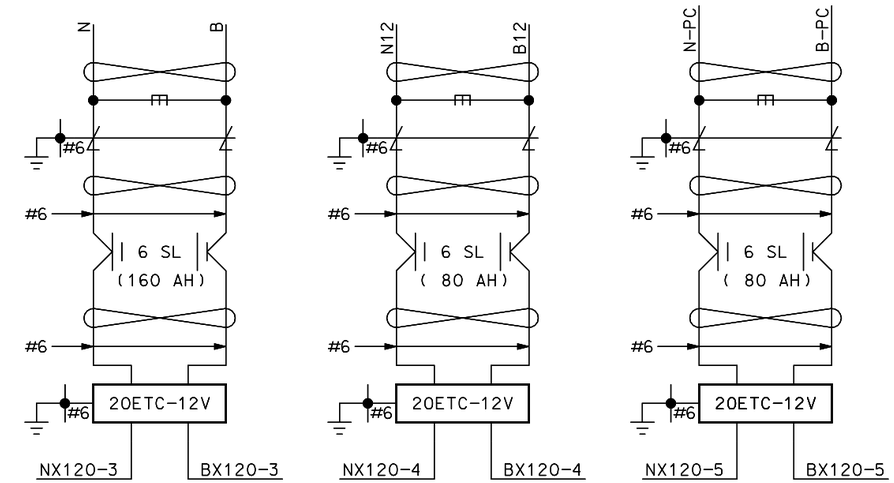

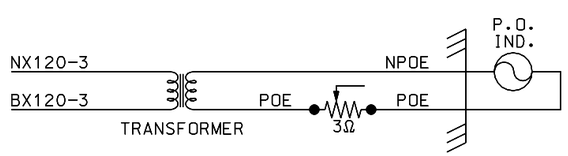

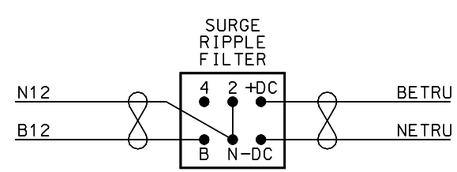

NOTES:

ALL AC POWERED EQUIPMENT SHALL BE GROUNDED WITH GREEN 6 AWG ETFE TO PRIME GROUND.

△ METAL LOAD CENTER HOUSING TO BE GROUNDED TO NEUTRAL BUS USING LONG SCREW PROVIDED.

ONE WIRE TO EACH CB. A MAXIMUM OF TWO MAY BE USED IF NECESSARY.

RUN ALL LOAD CENTER WIRES THROUGH INSULATED GROMMETS.

ALL WIRING ON THIS SHEET
#10 AWG UNLESS NOTED

~REVISIONS~

THIS SHEET
ALL NEW

RECORD
07/10/12

Metra SIGNAL ENGINEERING
CHICAGO, ILLINOIS

CHICAGO TO FOX LAKE
SIGS. & DAX LOCATION
POWER DISTRIBUTION

REFERENCE: 48.59 SH.1 THRU SH.5			DATE: 07/10/12
DESIGNED	DRAWN	CHECKED	APPROVED
DM	DM	FGB	WPK
DISTRICT	PRINT NUMBER		
MW/N	48.59 SH.5		

12-DEC-2012 14:48

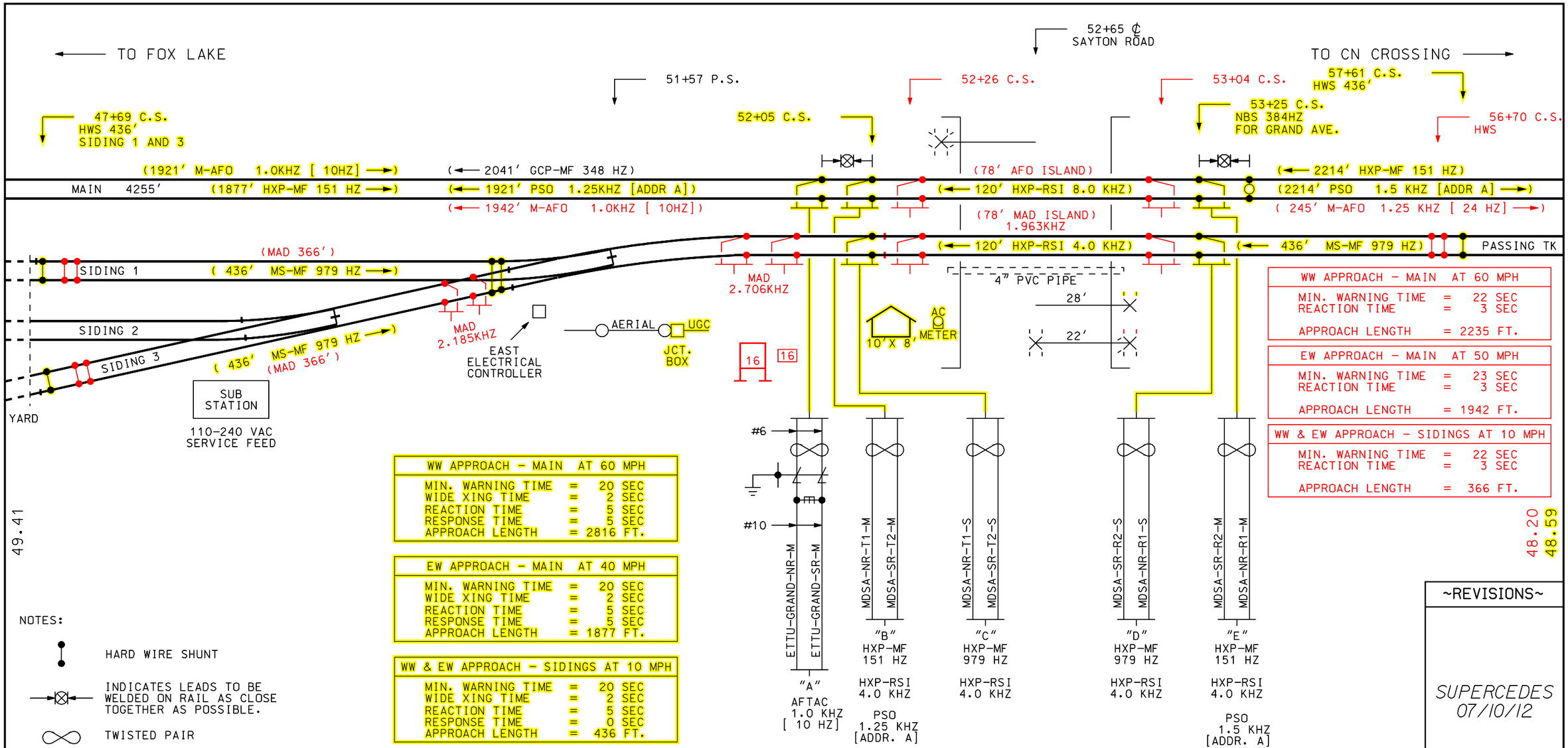

WW APPROACH - MAIN AT 60 MPH		
MIN. WARNING TIME	=	22 SEC
REACTION TIME	=	3 SEC
APPROACH LENGTH	=	2235 FT.

EW APPROACH - MAIN AT 50 MPH		
MIN. WARNING TIME	=	23 SEC
REACTION TIME	=	3 SEC
APPROACH LENGTH	=	1942 FT.

WW & EW APPROACH - SIDINGS AT 10 MPH		
MIN. WARNING TIME	=	22 SEC
REACTION TIME	=	3 SEC
APPROACH LENGTH	=	366 FT.

WW APPROACH - MAIN AT 60 MPH		
MIN. WARNING TIME	=	20 SEC
WIDE XING TIME	=	2 SEC
REACTION TIME	=	5 SEC
RESPONSE TIME	=	5 SEC
APPROACH LENGTH	=	2816 FT.

EW APPROACH - MAIN AT 40 MPH		
MIN. WARNING TIME	=	20 SEC
WIDE XING TIME	=	2 SEC
REACTION TIME	=	5 SEC
RESPONSE TIME	=	5 SEC
APPROACH LENGTH	=	1877 FT.

WW & EW APPROACH - SIDINGS AT 10 MPH		
MIN. WARNING TIME	=	20 SEC
WIDE XING TIME	=	2 SEC
REACTION TIME	=	5 SEC
RESPONSE TIME	=	0 SEC
APPROACH LENGTH	=	436 FT.

NOTES:

- HARD WIRE SHUNT
- INDICATES LEADS TO BE WELDED ON RAIL AS CLOSE TOGETHER AS POSSIBLE.
- TWISTED PAIR
- PRIME GROUND
- INDICATES AUTOMATIC GATE PER FHWA MUTCD WITH SIDELIGHTS ON NORTH SIGNAL
- INDICATES AUTOMATIC GATE WITH FLASHING LIGHT SIGNAL PER FHWA MUTCD
- INDICATES CANTILEVER SUPPORTED FLASHING LIGHT SIGNAL PER FHWA MUTCD WITH SIDELIGHTS ON SOUTH SIGNAL AND PEDESTRIAN BELL ON SOUTH SIGNAL.

(⟵ 2214' HXP-MF 151 HZ)

- FREQUENCY
- LENGTH OF CIRCUIT
- DIRECTION TO TRANSMITTER

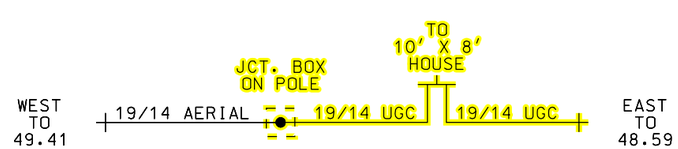

~REVISIONS~

SUPERCEDES 07/10/12

YELLOW - IN
RED - OUT

RECORD 11/19/12

DOT# 386-453J

Metra SIGNAL ENGINEERING CHICAGO, ILLINOIS

CHICAGO TO FOX LAKE
SAYTON ROAD
PLAN VIEW

REFERENCE: 49.02 SH.1 THRU SH.11			DATE: 07/10/12
DESIGNED	DRAWN	CHECKED	APPROVED
DISTRICT	PRINT NUMBER		
MW/N	49.02 SH.1		

12-DEC-2012 14:48

~REVISIONS~

THIS SHEET
ALL NEW

RECORD
07/10/12

ALL WIRING ON THIS SHEET
#16 AWG UNLESS NOTED

Metra SIGNAL ENGINEERING
CHICAGO, ILLINOIS

CHICAGO TO FOX LAKE
SAYTON ROAD
LINE CIRCUITS

REFERENCE:			DATE:
49.02 SH.1 THRU SH.11			07/10/12
DESIGNED	DRAWN	CHECKED	APPROVED
BM	BM	FGB	WPK
DISTRICT	PRINT NUMBER		
MW/N	49.02 SH.2		

12-DEC-2012 14:49