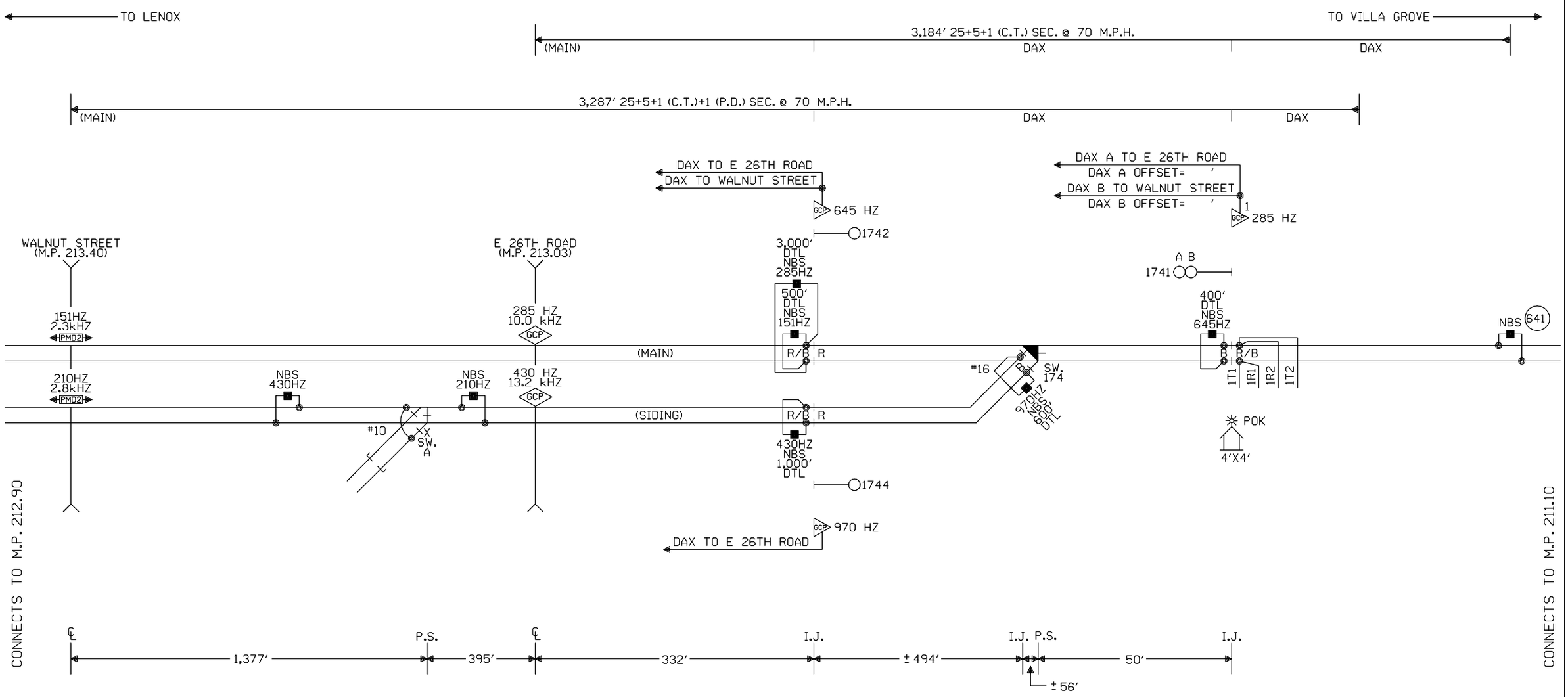

NOTES:

⊗ = TWISTED WIRES
ALL TRACK WIRES 2C. #6
INSULATED 1 TWIST PER FT.

TRANSMITTER AND RECEIVER LEADS
TO BE SEPARATED BY AT LEAST 12" IN TRENCH,
LENGTHS SHOULD NOT EXCEED MANUFACTURER'S
RECOMMENDATION.

ALL BUNGALOW WIRING TO BE #16 AWG FLEX
UNLESS OTHERWISE SPECIFIED EXCEPT ALL GROUND
WIRE TO BE #6 AWG FLEX OR LARGER.

REFER TO UP STANDARD DWG. FOR BUNGALOW
GROUNDING.

PORTABLE GENERATOR EXTENSION CORD
FOR 240V TO 240V IS PROVIDED AS WELL
AS A 120V TO 240V ADAPTER.

CONSTRUCTION NOTE:

1. INSTALL IN CONJUNCTION WITH E 26TH ROAD AT M.P. 213.03 (W.O. 11993).

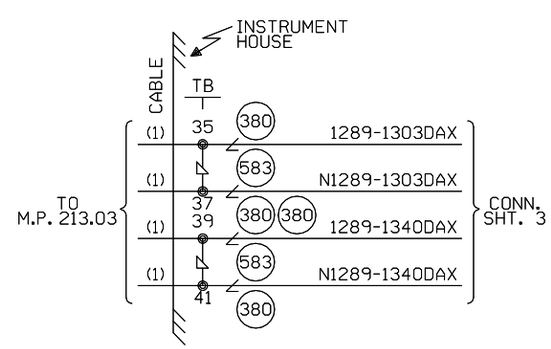

W(S) ←○→ E(N)

CABLE TABULATION

CABLE NO.1 7C#14 U.G.B.T. HOUSE TO M.P. 213.03

NEW SHEET

Designed: 12/22/11 INSTALL FLS/GATES & CONSTANT WARNING AT E 26TH ROAD M.P. 213.03 Rec#: WO#: 11993 IS: /JPW /CTC/JTB	MODIFICATION LEVEL		UNION PACIFIC QUALITY PRODUCTIVITY SAFETY SIGNAL DESIGN	Date: 12/22/11	UNION PACIFIC RAILROAD	Sh.: 1
	Q. A. LAST LEVEL CHECKED	DU		Des: CTC	OHLMAN, ILLINOIS	DOT 000000R
	LAST LEVEL MOD THIS TYPICAL	DU		Chk: JPW	REMOTE LOCATION	MP: 212.89
	LAST LEVEL BY DESIGNER	DU		AFE: 11993	PANA SUBDIVISION	ID: 030221289.1X
	CHANGED FROM TYPICAL?	Y			Office of Sr AVP Engineering - Signal/TCO Omaha, Nebraska	
	REV 01.24.11 4K REMOTE.1					

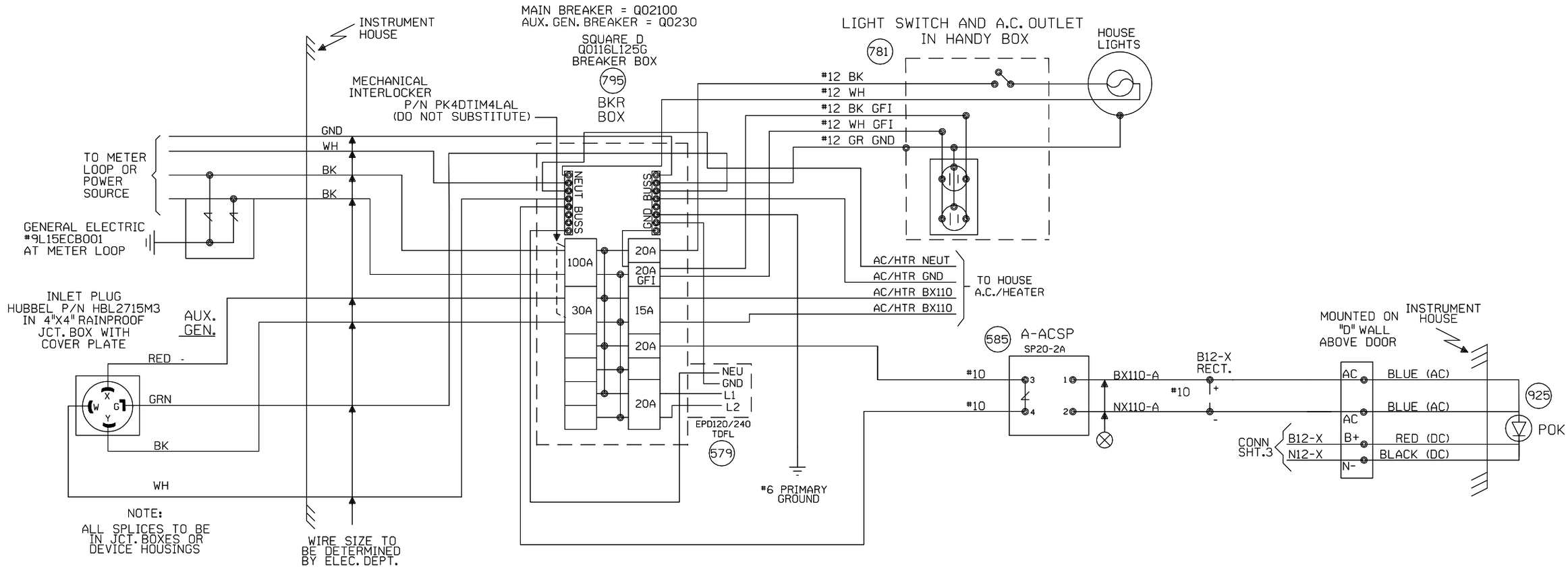

NEW SHEET

Designed: 12/22/11

INSTALL FLS/GATES & CONSTANT WARNING AT E 26TH ROAD M.P. 213.03

Rec#: WO#: 11993
IS: /JPW
/ /CTC/JTB

MODIFICATION LEVEL	
Q.A. LAST LEVEL CHECKED	DU
LAST LEVEL MOD THIS TYPICAL	DU
LAST LEVEL BY DESIGNER	DU
CHANGED FROM TYPICAL?	Y

REV 01.24.11 4K SEARAC.2

UNION PACIFIC
QUALITY PRODUCTIVITY SAFETY
SIGNAL DESIGN

Date: 12/22/11
Des: CTC
Chk: JPW
AFE: 11993

UNION PACIFIC RAILROAD

OHLMAN, ILLINOIS
REMOTE LOCATION
PANA SUBDIVISION

Office of Sr AVP Engineering - Signal/TCO Omaha, Nebraska

Sh.: 2
DOT 000000R
MP: 212.89
ID: 030221289.2X

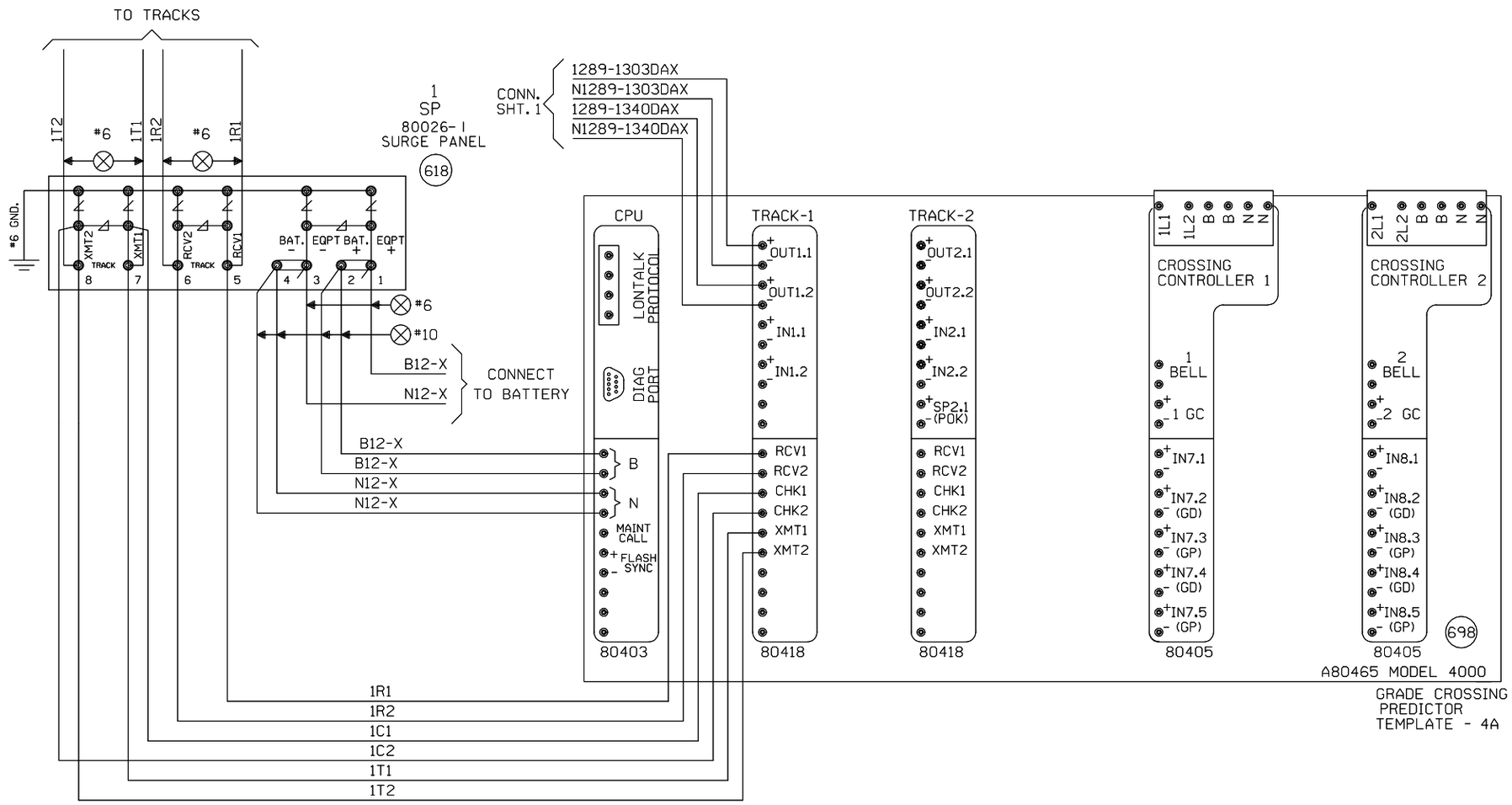

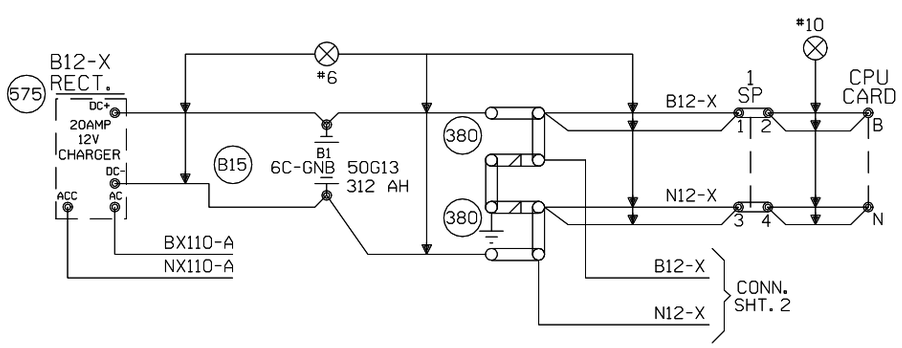

"Mf" FREQUENCY (HZ)	MAXIMUM TRANSMIT WIRE LENGTH (FEET)
86	100
114	125
156	150
211	200
285-970	250

NOTE:
EACH TRANSMITTER TO RAIL WIRE FROM XMT1 AND XMT2 MUST NOT EXCEED THE MAXIMUM LENGTH SPECIFIED IN THE TABLE SHOWN. THE RECEIVER WIRE LENGTH IS NOT CRITICAL. DOES NOT APPLY TO 6 TRACK WIRE APPLICATION.

NEW SHEET

Designed: 12/22/11
INSTALL FLS/GATES & CONSTANT WARNING AT E 26TH ROAD M.P. 213.03
Rec#: WO#: 11993
IS: /JPW
/ /CTC/JTB

MODIFICATION LEVEL	
Q. A. LAST LEVEL CHECKED	DU
LAST LEVEL MOD THIS TYPICAL	DU
LAST LEVEL BY DESIGNER	DU
CHANGED FROM TYPICAL?	Y

REV 01.24.11 4K 2TKGF.3

UNION PACIFIC
QUALITY PRODUCTIVITY SAFETY
SIGNAL DESIGN

Date: 12/22/11
Des: CTC
Chk: JPW
AFE: 11993

UNION PACIFIC RAILROAD
OHLMAN, ILLINOIS
REMOTE LOCATION
PANA SUBDIVISION
Office of Sr AVP Engineering - Signal/TCO Omaha, Nebraska

Sh.: 3
DOT 000000R
MP: 212.89
ID: 030221289.3X

Minimum Program Steps Report

Location and SIN

DOT Number: 000000R
Milepost Number: 212.89
Site Name: OHLMAN, IL

SIN: 762010010016 *

* Parameter is part of office check number calculation.

MCF and Template Selection

MCF Name: GCP-T6X-02-4.mcf
MCF Revision: 24
MCFCRC: 09FC363B

Template = 4A:6 Remotes (OCCN) *

* Parameter is part of office check number calculation.

Minimum Program Steps

TEMPLATE: track 1-Remote Dax
Track 1 : GCP Frequency = 285 Hz (Field,TCN)
Track 1 : Approach Distance = 2315 ft (Set in Field,TCN)
Track 1 : Dax A Warning Time = 26 sec (OCCN) *
Track 1 : Dax A Offset Distance = 869 ft (Set in Field)
Track 1 : GCP Transmit Level = Medium (Set in Field,TCN)

TEMPLATE: track 1-Remote Daxes
Track 1 : Dax B Used = Yes (OCCN) *
Track 1 : Dax B Warning Time = 27 sec (OCCN) *
Track 1 : Dax B Offset Distance = 2613 ft (Set in Field)

TEMPLATE: track Anding
AND 1 XR Used = No (OCCN) *

TEMPLATE: OOS
OOS Timeout = 1 hrs (Set in Field)

TEMPLATE: OP assignment 1
OUT 1.1 = T1 Dax A (OCCN) *
OUT 1.2 = T1 Dax B (OCCN) *

ADVANCED: site options
Daylight Savings = On (Set in Field)

* Parameter is part of office check number calculation.

Check Numbers

Office Check Number: 5C9FE102
Config. Check Number: 5D8C7A04
(Based on MCF Revision 24)

Parameters not part of office check number calculation:

Track 1 : GCP Frequency = 285 Hz
Track 1 : Approach Distance = 2315 ft (Set in Field)
Track 1 : Dax A Offset Distance = 869 ft (Set in Field)
Track 1 : GCP Transmit Level = Medium (Set in Field)
Track 1 : Dax B Offset Distance = 2613 ft (Set in Field)
OOS Timeout = 1 hrs (Set in Field)
Daylight Savings = On (Set in Field)

Comments

<none>

Configuration Package File

Filename: 030221289 000000R.pac
Path: H:\01-Xing\upT10240\GCP Programs\M.P. 212.89\
Date/Time: 4/30/2012 10:14:34

NEW SHEET

Designed: 12/22/11
INSTALL FLS/GATES & CONSTANT WARNING AT E. 26TH ROAD M.P. 213.03
Rec#: WO#: 11993
IS: /JPW
/ /CTC/JTB

NOTE: Actual OFFSET and ISLAND distances must be verified by field personnel.

UNION PACIFIC
QUALITY PRODUCTIVITY SAFETY
SIGNAL DESIGN

Date:	12/22/11
Des:	CTC
Chk:	JPW
AFE:	11993

UNION PACIFIC RAILROAD
OHLMAN, ILLINOIS
REMOTE LOCATION
PANA SUBDIVISION
Office of Sr AVP Engineering - Signal/TCO Omaha, Nebraska

Sh.:	3A
DOT	000000R
MP:	212.89
ID:	030221289.3AX

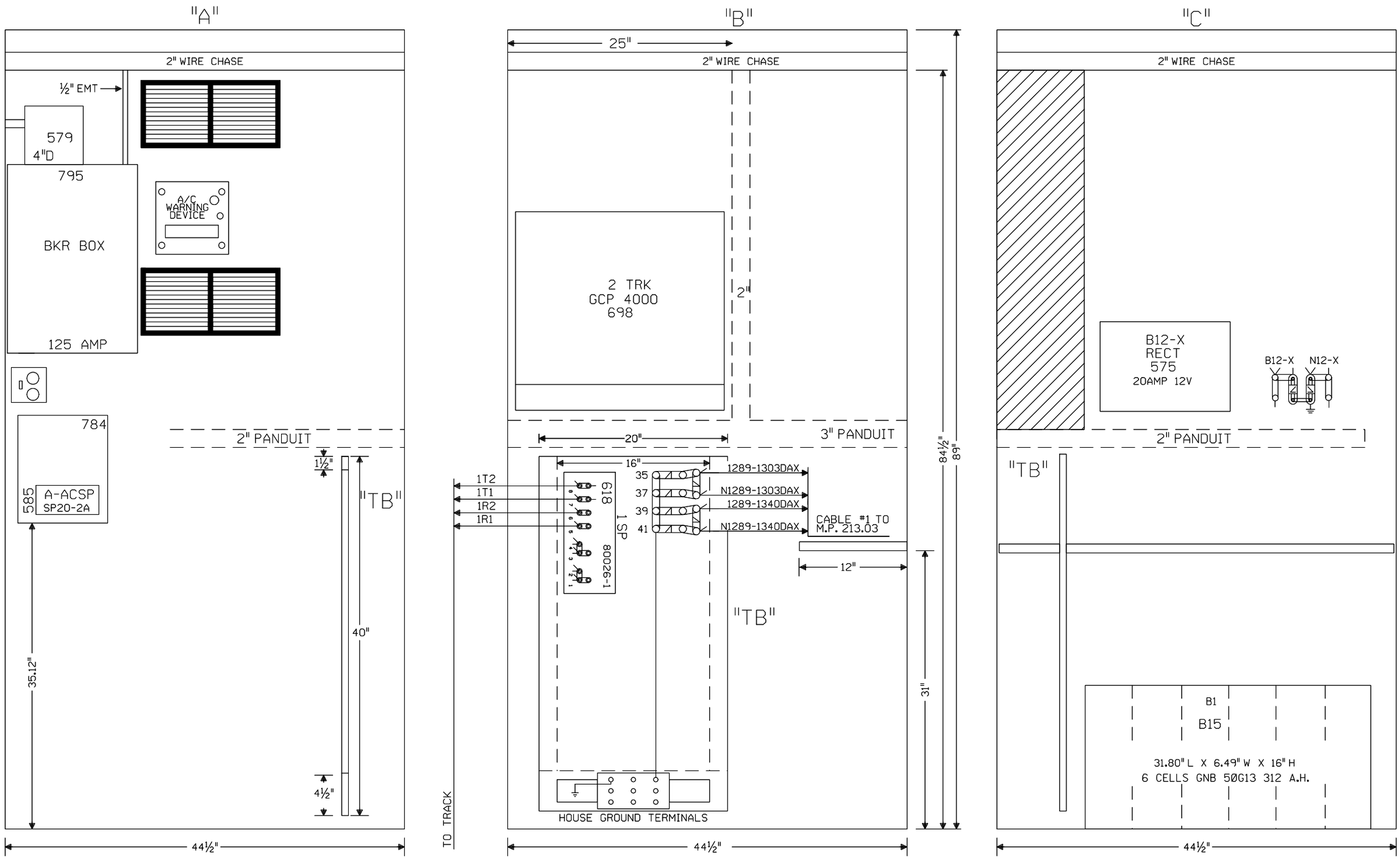

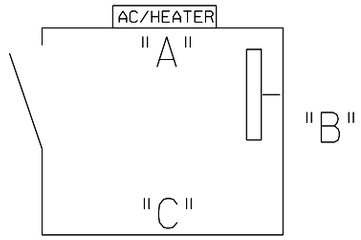

NOTE: ALL DIMENSIONS SHOWN
ARE APPROXIMATE.

NEW SHEET

Designed: 12/22/11
INSTALL FLS/GATES & CONSTANT WARNING AT E 26TH ROAD M.P. 213.03
Rec#: WO#: 11993
IS: /JPW
/ /CTC/JTB

MODIFICATION LEVEL	
Q.A. LAST LEVEL CHECKED	DU
LAST LEVEL MOD THIS TYPICAL	DU
LAST LEVEL BY DESIGNER	DU
CHANGED FROM TYPICAL?	Y

REV 01.24.11 4K REMOTE.5

UNION PACIFIC
QUALITY PRODUCTIVITY SAFETY
SIGNAL DESIGN

Date: 12/22/11
Des: CTC
Chk: JPW
AFE: 11993

UNION PACIFIC RAILROAD
OHLMAN, ILLINOIS
REMOTE LOCATION
PANA SUBDIVISION
Office of Sr AVP Engineering - Signal/TCO Omaha, Nebraska

Sh.: 4
DOT 000000R
MP: 212.89
ID: 030221289.4X