WCH 3593-E

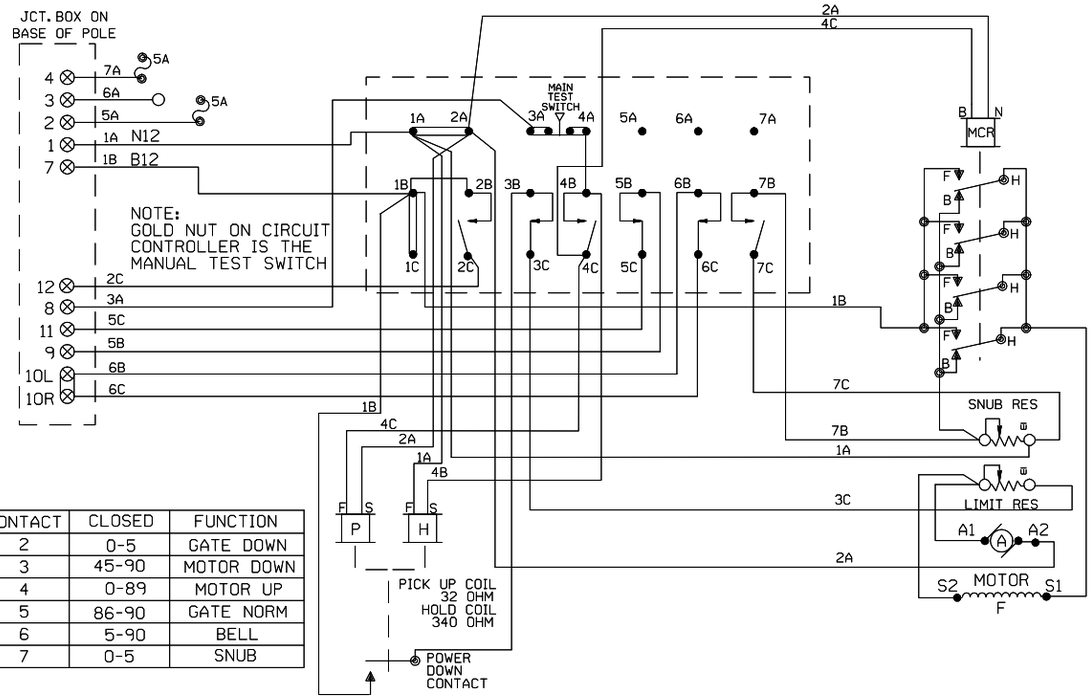

CONTACT	CLOSED	FUNCTION
2	0-5	GATE DOWN
3	45-90	MOTOR DOWN
4	0-89	MOTOR UP
5	86-90	GATE NORM
6	5-90	BELL
7	0-5	SNUB

WCH 3597-E

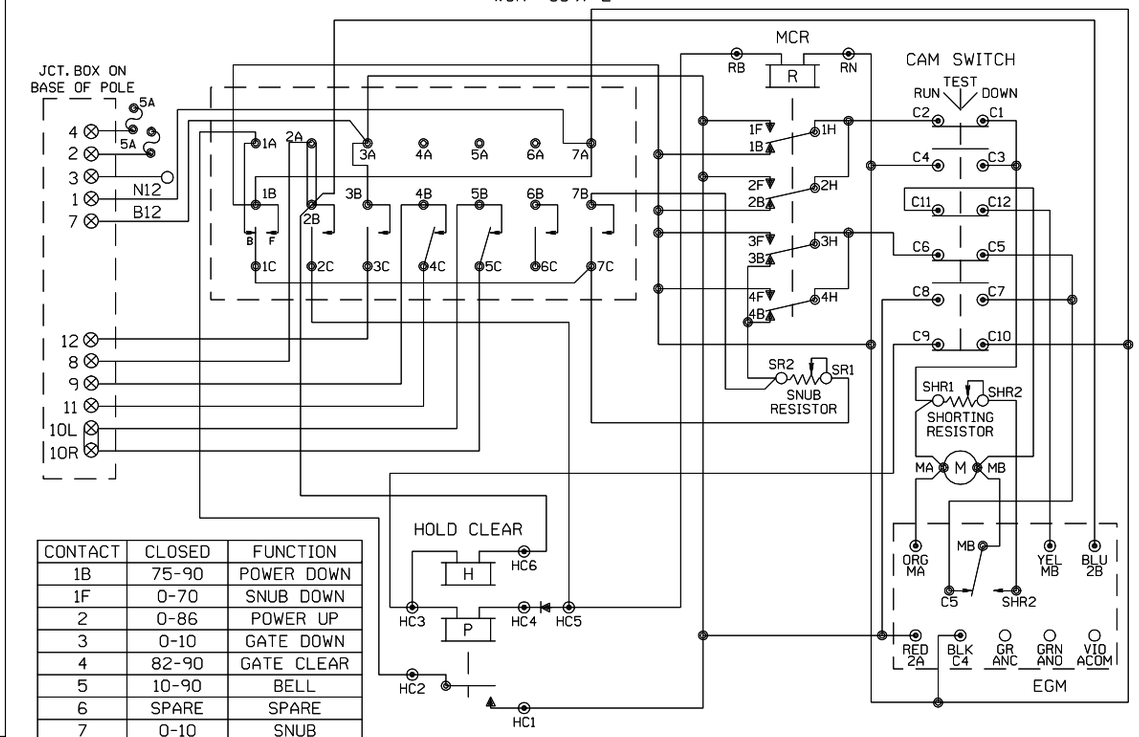

CONTACT	CLOSED	FUNCTION
1B	75-90	POWER DOWN
1F	0-70	SNUB DOWN
2	0-86	POWER UP
3	0-10	GATE DOWN
4	82-90	GATE CLEAR
5	10-90	BELL
6	SPARE	SPARE
7	0-10	SNUB

WCH 3597-RB

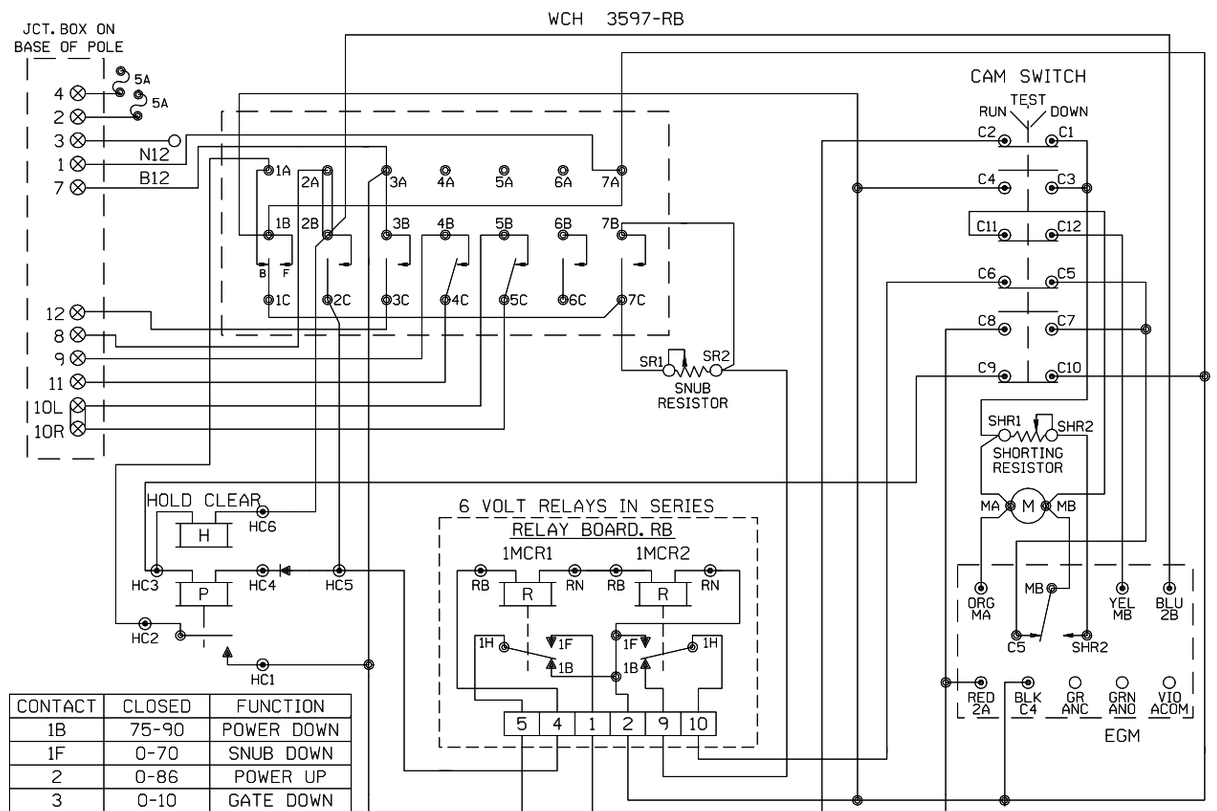

CONTACT	CLOSED	FUNCTION
1B	75-90	POWER DOWN
1F	0-70	SNUB DOWN
2	0-86	POWER UP
3	0-10	GATE DOWN
4	82-90	GATE CLEAR
5	10-90	BELL
6	SPARE	SPARE
7	0-10	SNUB

JCT. BOX ON BASE POLE

L	R	L	R
1		7	
2		8	
3		9	
4		10	
5		11	
6		12	

SHOW TYPE MECH. INSTALLED

ALL MECHANISMS SHOWN IN THE CLEAR POSITION

SAFETRAN S-60

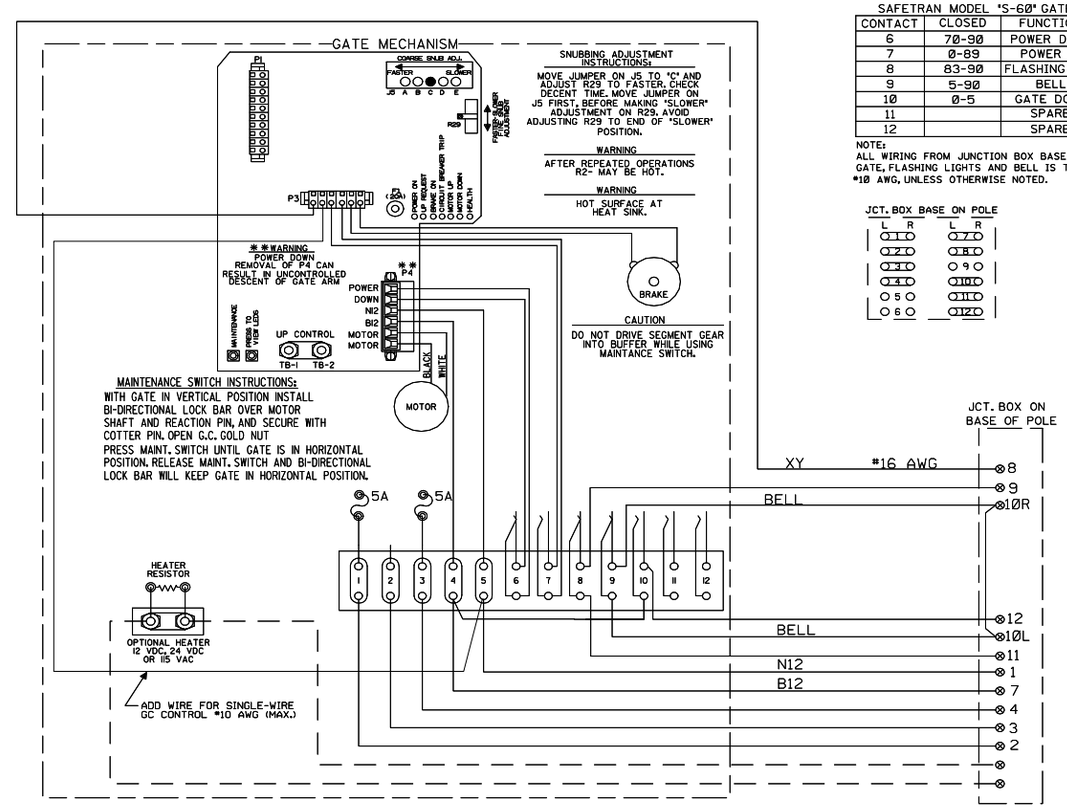

SAFETRAN MODEL "S-60" GATE

CONTACT	CLOSED	FUNCTION
6	70-90	POWER DOWN
7	0-89	POWER UP
8	83-90	FLASHING LGT.
9	5-90	BELL
10	0-5	GATE DOWN
11		SPARE
12		SPARE

NOTE:
ALL WIRING FROM JUNCTION BOX BASE TO GATE, FLASHING LIGHTS AND BELL IS TO BE #10 AWG, UNLESS OTHERWISE NOTED.

JCT. BOX BASE ON POLE

L	R	L	R
1		7	
2		8	
3		9	
4		10	
5		11	
6		12	

NEW SHEET

Designed: 12/22/11
INSTALL FLS/GATES & CONSTANT WARNING AT E 26TH ROAD M.P. 213.03
Rec#: WO#: 11993
IS: /JPW
/CTC/JTB

MODIFICATION LEVEL	
Q. A. LAST LEVEL CHECKED	DU
LAST LEVEL MOD THIS TYPICAL	DU
LAST LEVEL BY DESIGNER	DU
CHANGED FROM TYPICAL?	N

REV 01.24.11 4K GWIRING.7

UNION PACIFIC
QUALITY PRODUCTIVITY SAFETY
SIGNAL DESIGN

Date: 12/22/11
Des: CTC
Chk: JPW
AFE: 11993

UNION PACIFIC RAILROAD
OHLMAN, ILLINOIS
E 26TH ROAD
PANA SUBDIVISION
Office of Sr AVP Engineering - Signal/TCO Omaha, Nebraska

Sh.: 6
DOT 542136J
MP: 213.03
ID: 030221303.6X

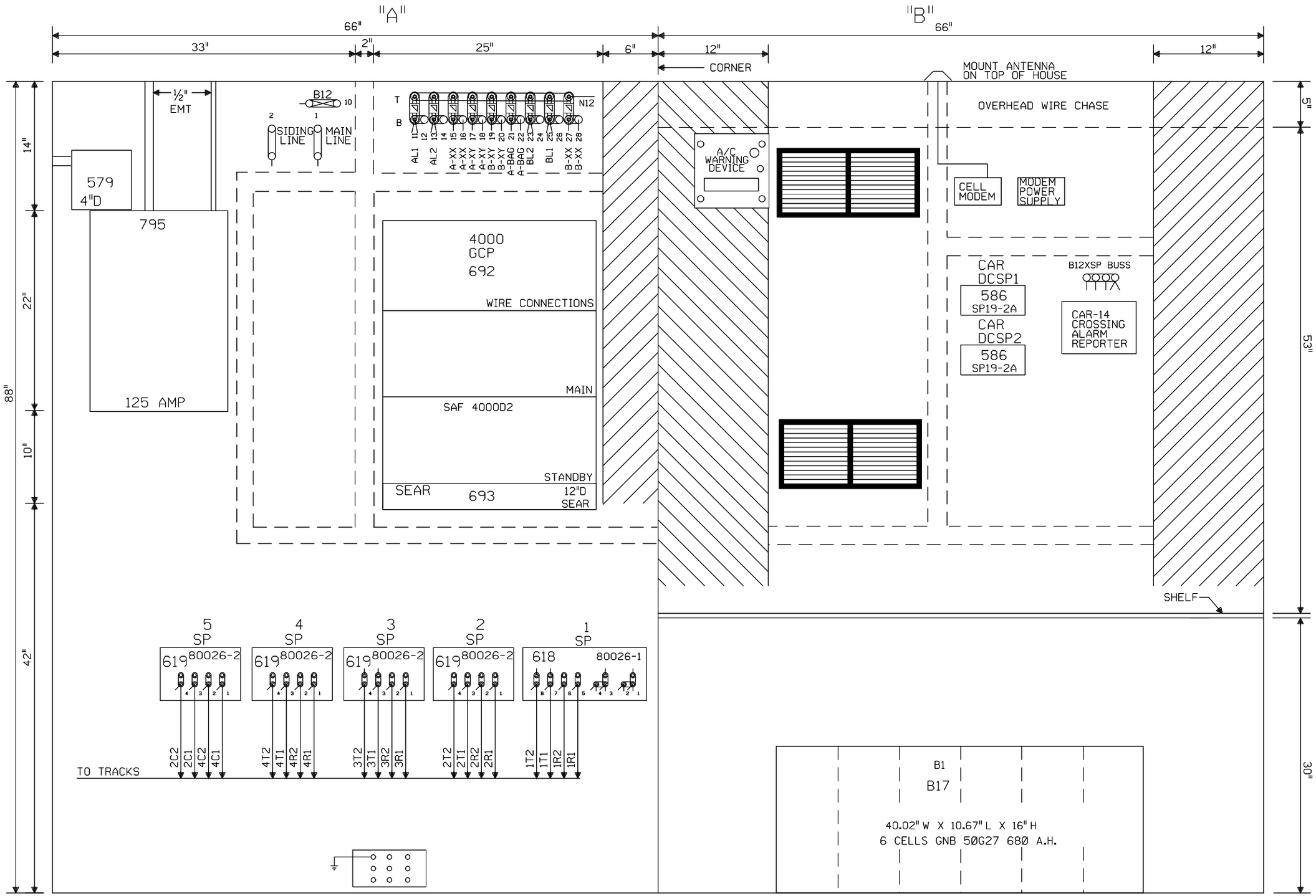

NOTE: ALL DIMENSIONS SHOWN ARE APPROXIMATE.

NEW SHEET

Designed: 12/22/11

INSTALL FLS/GATES & CONSTANT WARNING AT E 26TH ROAD M.P. 213.03

Rec#: WO#: 11993 /JPW

IS: / /CTC/JTB

MODIFICATION LEVEL	
Q. A. LAST LEVEL CHECKED	DU
LAST LEVEL MOD THIS TYPICAL	DU
LAST LEVEL BY DESIGNER	DU
CHANGED FROM TYPICAL?	Y

REV 01.24.11 4K 4TKGFC.8

UNION PACIFIC

QUALITY PRODUCTIVITY SAFETY

SIGNAL DESIGN

Date: 12/22/11

Des: CTC

Chk: JPW

AFE: 11993

UNION PACIFIC RAILROAD

OHLMAN, ILLINOIS
E 26TH ROAD
PANA SUBDIVISION

Office of Sr AVP Engineering - Signal/TCO Omaha, Nebraska

Sh.: 7

DOT 542136J

MP: 213.03

ID: 030221303.7X

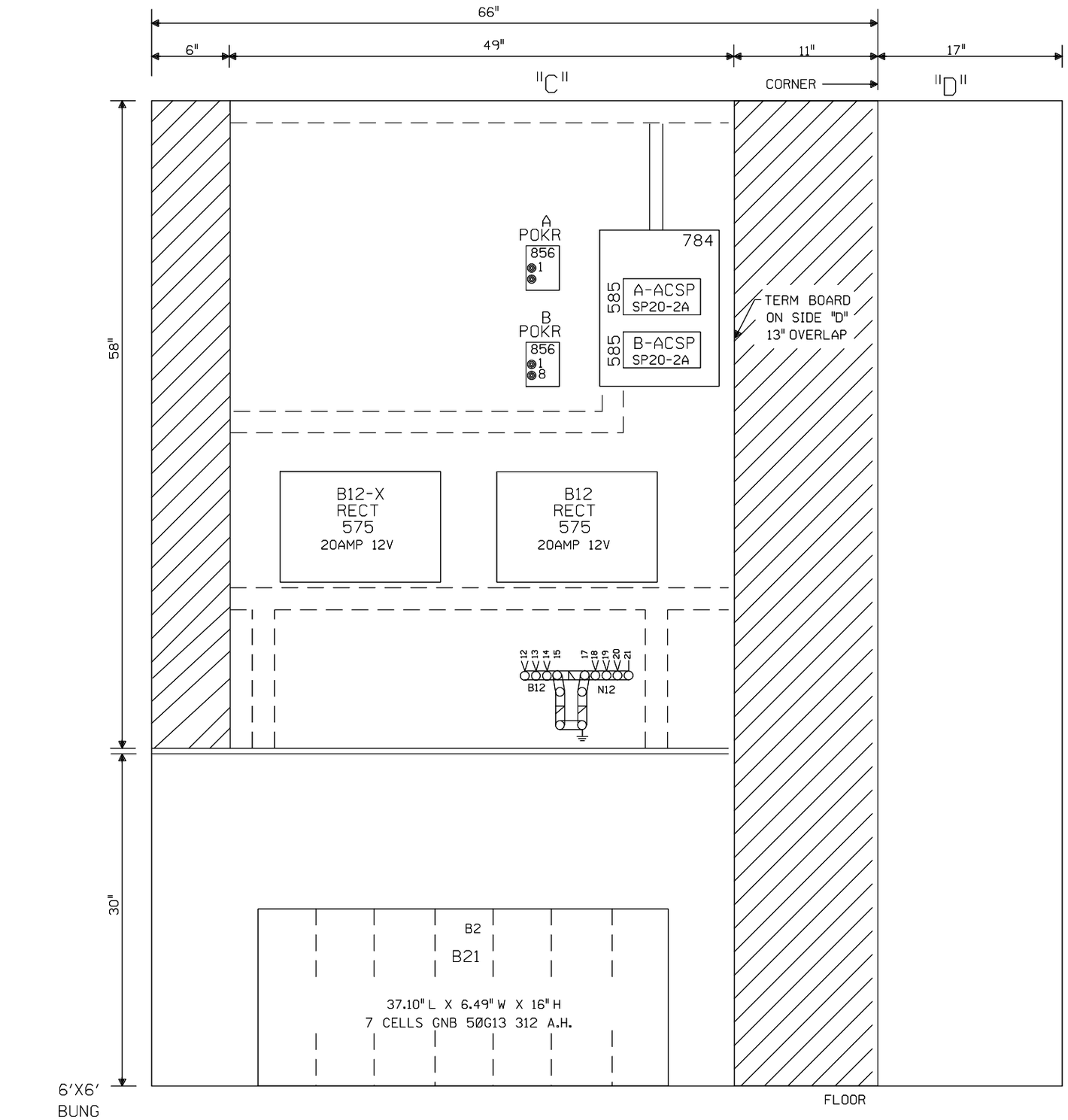

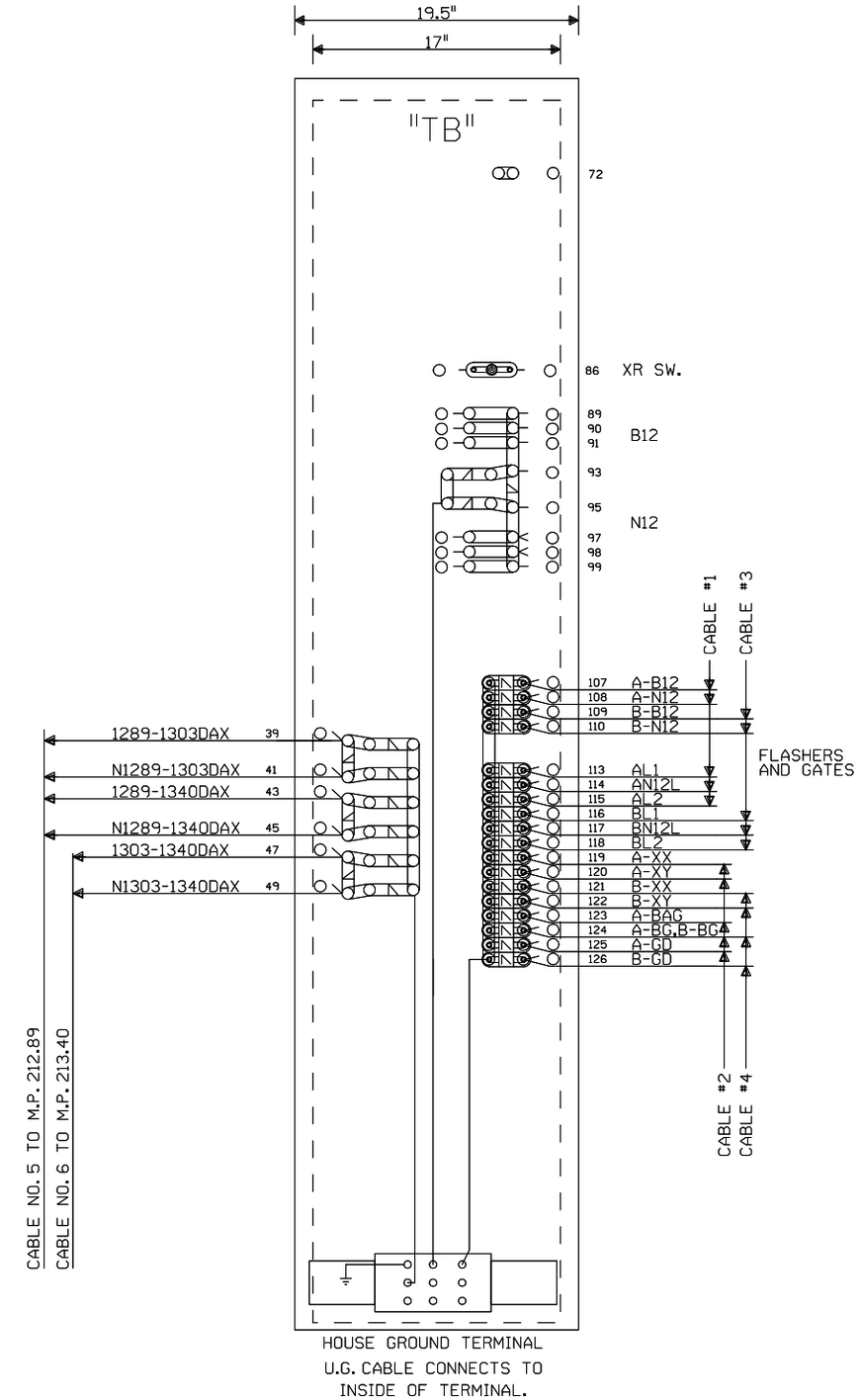

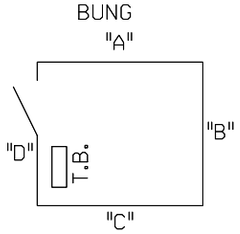

NOTE: ALL DIMENSIONS SHOWN
ARE APPROXIMATE.

NEW SHEET

Designed: 12/22/11

INSTALL FLS/GATES & CONSTANT WARNING AT E 26TH ROAD M.P. 213.03

Rec#: WO#: 11993
IS: /JPW
/ /CTC/JTB

MODIFICATION LEVEL	
Q. A. LAST LEVEL CHECKED	DU
LAST LEVEL MOD THIS TYPICAL	DU
LAST LEVEL BY DESIGNER	DU
CHANGED FROM TYPICAL?	Y

REV 01.24.11 4K GFC.9

UNION PACIFIC
QUALITY PRODUCTIVITY SAFETY
SIGNAL DESIGN

Date:	12/22/11
Des:	CTC
Chk:	JPW
AFE:	11993

UNION PACIFIC RAILROAD

OHLMAN, ILLINOIS
E 26TH ROAD
PANA SUBDIVISION

Office of Sr AVP Engineering - Signal/TCO Omaha, Nebraska

Sh.:	8
DOT	542136J
MP:	213.03
ID:	030221303.8X

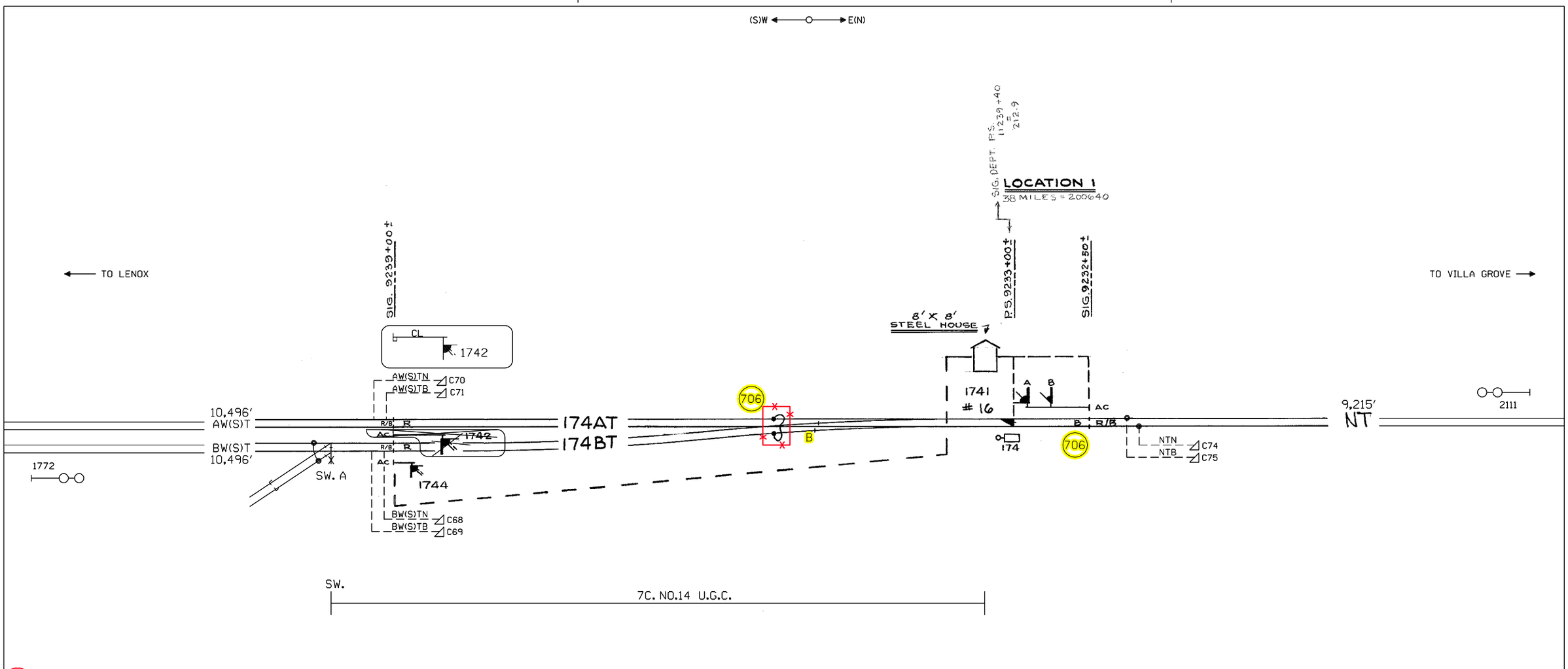

CONNECTS TO DRAWING 213.40
M.P. 213.03

CONNECTS TO DRAWING 211.10
M.P. 212.89

CONSTRUCTION NOTES:

1. INSTALL (1) - 500′ DTL (TAB 644A) AND RELOCATE EXISTING 151 HZ NBS TO TRAILING SIGNAL AT THIS LOCATION.
2. INSTALL (1) - BATTERY CHOKE (TAB 706), FOR TRACK BATTERY ON THE MAIN LINE 174T TRACK AT THIS LOCATION.
3. NEW TRACK BATTERY ON 174BT TRACK AT THIS LOCATION TO INCLUDE:
   - (1)-BATTERY CHOKE (TAB 706).
   - (1)-TRACK RESISTOR (TAB 90).
   - (2)-HEAVY DUTY ARRESTORS (TAB 582).
   - (1)-EQUALIZER ARRESTOR (TAB 583).
   - APPROXIMATELY 200′ OF 2C#6 U.G. CABLE.
4. ENSURE TJC'S ARE REMOVED AT THIS LOCATION.

= IN

= OUT

CTC/BKG

= EXISTING, REVISE ORIGINAL IF A.C.'d

C.P. 1213 (OHLMAN)
NORTH END
SIG. 1741, 1742, 1744
MP 212.90
PANA SUBDIVISION
8′X8′ HOUSE

TIF FILE ATTACHED TIF ID = 030221290.1S.TIF

					Designed: 12/22/11 INSTALL FLS/GATES & CONSTANT WARNING AT E 26TH ROAD M.P. 213.03 Rec#: WO#: 11993 IS: /JPW / /CTC/JTB	REV. 11-6-06 INSTALLED E.C. BETWEEN ENDS OF SIDINGS AT PANA AND OHLMAN. W.O. #53559 REC. #13382 2-24-06 JJL KAB/WITT/ /JJF	REDRAWN FROM BAR CODE #157646 ORIGINAL DATE 12/17/1976	UNION PACIFIC QUALITY PRODUCTIVITY SAFETY SIGNAL DESIGN	DES: DIG: WITT CHK: A.F.E. ID= 030221290.1S	UNION PACIFIC RAILROAD VILLA GROVE, ILLINOIS TO LENOX, ILLINOIS C.T.C. CIRCUITS Office of AVP Engineering - Design Omaha, Nebraska	DATE 11-6-06 SHEET 1 DWG 212.90 S-302-M

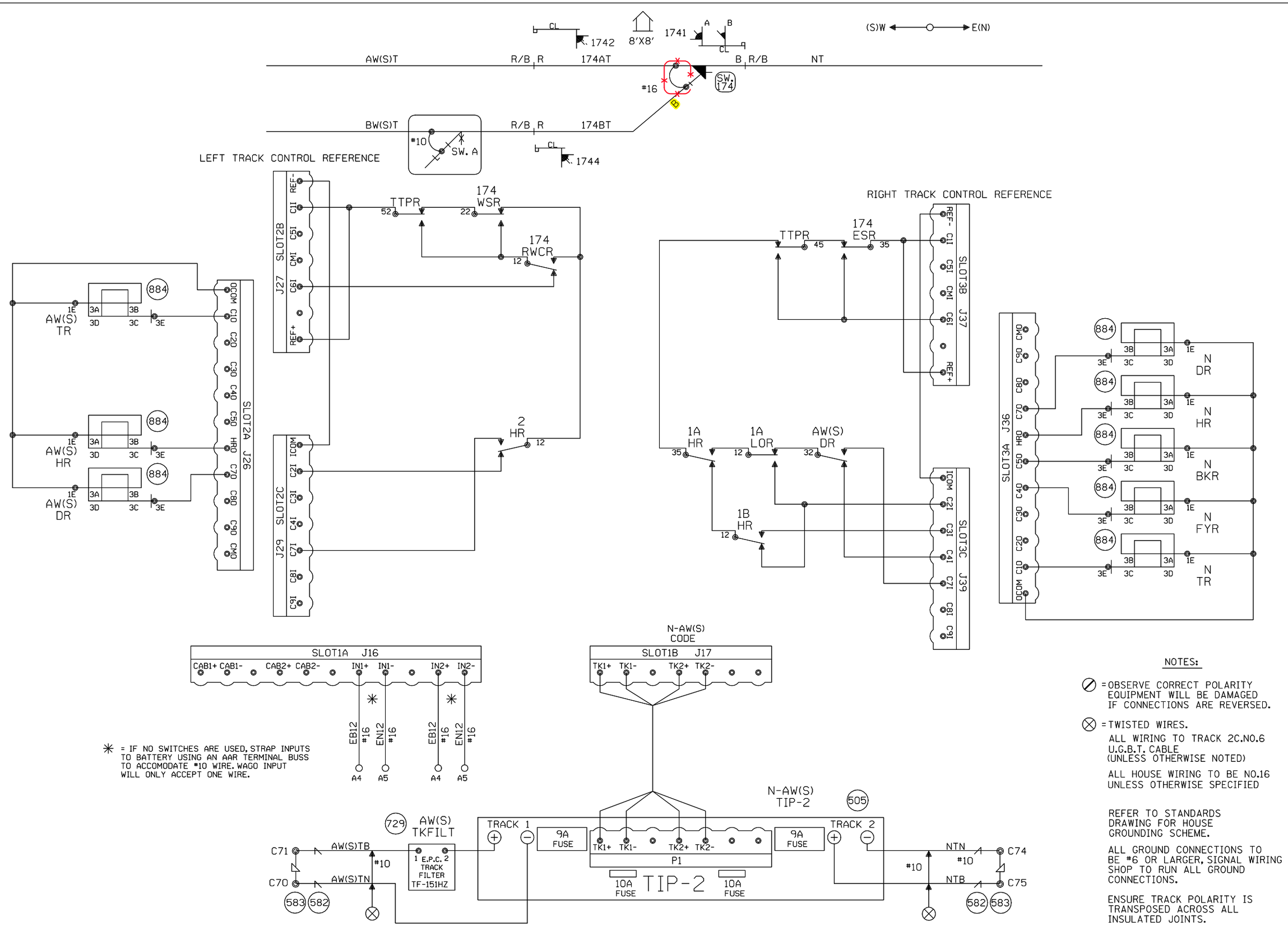

✳ = IF NO SWITCHES ARE USED, STRAP INPUTS TO BATTERY USING AN AAR TERMINAL BUSS TO ACCOMODATE #10 WIRE. WAGO INPUT WILL ONLY ACCEPT ONE WIRE.

NOTES:

⊘ = OBSERVE CORRECT POLARITY EQUIPMENT WILL BE DAMAGED IF CONNECTIONS ARE REVERSED.

⊗ = TWISTED WIRES.

ALL WIRING TO TRACK 2C.NO.6 U.G.B.T. CABLE (UNLESS OTHERWISE NOTED)

ALL HOUSE WIRING TO BE NO.16 UNLESS OTHERWISE SPECIFIED

REFER TO STANDARDS DRAWING FOR HOUSE GROUNDING SCHEME.

ALL GROUND CONNECTIONS TO BE #6 OR LARGER, SIGNAL WIRING SHOP TO RUN ALL GROUND CONNECTIONS.

ENSURE TRACK POLARITY IS TRANSPOSED ACROSS ALL INSULATED JOINTS.

PANA SUBDIVISION
C.P. 1213 (OHLMAN)
SIG. 1741, 1742, 1744
M.P. 212.90
8' X 8' HOUSE

Designed: 12/22/11
INSTALL FLS/GATES & CONSTANT WARNING AT E 26TH ROAD M.P. 213.03
Rec#: WO#: 11993
IS: /JPW /CTC/JTB

REV. 11-6-06
INSTALLED E.C. BETWEEN ENDS OF SIDINGS AT PANA AND OHLMAN.
W.O. #53559
REC. #13382
2-24-06 JJL
KAB/WITT/ /JJF

MODIFICATION LEVEL	
Q.A. LAST LEVEL CHK'D.	DD
LAST LEVEL MOD. THIS TYP.	DD
LAST LEVEL BY DESIGNER.	DJ
CHANGED FROM TYP.? Y/N	Y

UNION PACIFIC
QUALITY PRODUCTIVITY SAFETY
SIGNAL DESIGN

DES: JJF
DIG: JJF
CHK: JJL
A.F.E. 53559
ID= 030221290.3S

UNION PACIFIC RAILROAD
VILLA GROVE, ILLINOIS
TO LENOX, ILLINOIS
C.T.C. CIRCUITS
OFFICE OF CHIEF ENG'R SIGNALS OMAHA NEBR.

DATE 2-22-05
SHEET 3
DWG 212.90
S-302-M

(08/13/02) (EC5H.1)