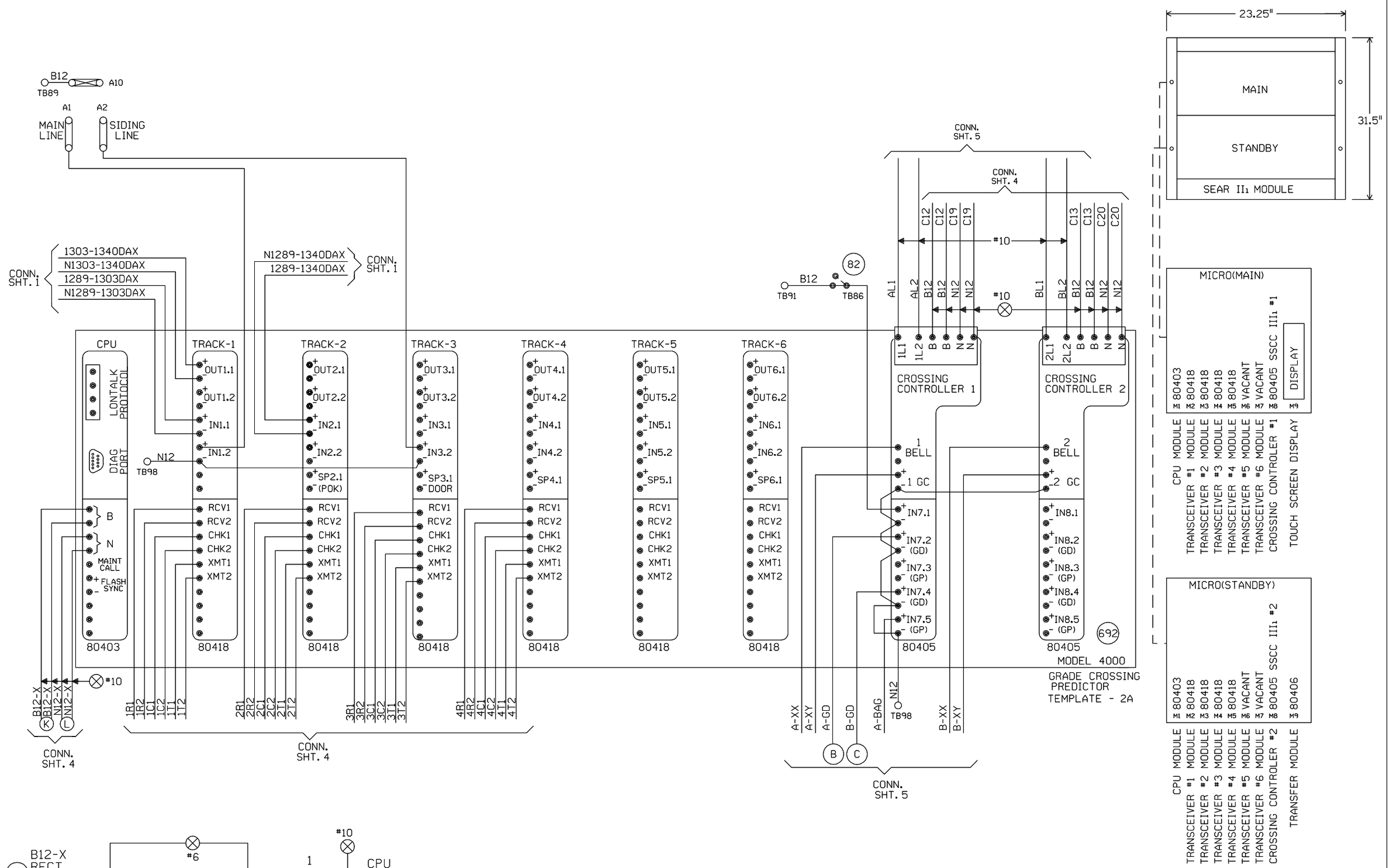

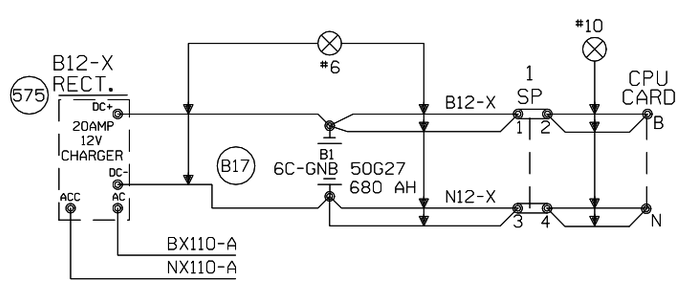

"Mf" FREQUENCY (HZ)	MAXIMUM TRANSMIT WIRE LENGTH (FEET)
86	100
114	125
156	150
211	200
285-970	250

NOTE:
EACH TRANSMITTER TO RAIL WIRE FROM XMT1 AND XMT2 MUST NOT EXCEED THE MAXIMUM LENGTH SPECIFIED IN THE TABLE SHOWN. THE RECEIVER WIRE LENGTH IS NOT CRITICAL. DOES NOT APPLY TO 6 TRACK WIRE APPLICATION.

NEW SHEET

Designed: 12/22/11
INSTALL FLS/GATES & CONSTANT WARNING AT E 26TH ROAD M.P. 213.03
Rec#: WO#: 11993
IS: /JPW
/CTC/JTB

MODIFICATION LEVEL	
Q. A. LAST LEVEL CHECKED	DU
LAST LEVEL MOD THIS TYPICAL	DU
LAST LEVEL BY DESIGNER	DU
CHANGED FROM TYPICAL?	Y

REV 01.24.11 4K 4TKB4GF.3

UNION PACIFIC
QUALITY PRODUCTIVITY SAFETY
SIGNAL DESIGN

Date: 12/22/11
Des: CTC
Chk: JPW
AFE: 11993

UNION PACIFIC RAILROAD
OHLMAN, ILLINOIS
E 26TH ROAD
PANA SUBDIVISION
Office of Sr AVP Engineering - Signal/TCO Omaha, Nebraska

Sh.: 3
DOT 542136J
MP: 213.03
ID: 030221303.3X

Minimum Program Steps Report

Location and SIN

DOT Number: 542136J
Milepost Number: 213.03
Site Name: OHLMAN, IL

SIN: 762010010016 *

* Parameter is part of office check number calculation.

MCF and Template Selection

MCF Name: GCP-T6X-02-4.mcf
MCF Revision: 24
MCFCRC: 09FC363B

Template = 2A:4 Bi, 2 Rem (OCCN) *

* Parameter is part of office check number calculation.

Minimum Program Steps

TEMPLATE: module configuration
Track 3/PSO 2 Slot = Track (OCCN) *
Track 4/PSO 3 Slot = Track (OCCN) *

TEMPLATE: track 1-Bi, Island
Track 1 : GCP Frequency = 285 Hz (Field,TCN)
Track 1 : Approach Distance = 3184 ft (Set in Field,TCN)
Track 1 : Prime Warning Time = 26 sec (OCCN) *
Track 1 : Prime UAX = IP (OCCN) *
Track 1 : Prime UAX Pickup = 15 sec (OCCN) *
Track 1 : GCP Transmit Level = Medium (Set in Field,TCN)
Track 1 : Isl Frequency = 10.0 kHz (Set in Field)

TEMPLATE: track 2-Remote Prime
Track 2 : GCP Frequency = 645 Hz (Field,TCN)
Track 2 : Approach Distance = 600 ft (Set in Field,TCN)
Track 2 : Prime Offset Distance = 99 ft (Set in Field)
Track 2 : GCP Transmit Level = Medium (Set in Field,TCN)

TEMPLATE: track 2 Daxes
Track 2 : Dax A Used = Yes (OCCN) *
Track 2 : Dax A Warning Time = 26 sec (OCCN) *
Track 2 : Dax A Offset Distance = 269 ft (Set in Field)
Track 2 : Dax B Used = Yes (OCCN) *
Track 2 : Dax B Warning Time = 26 sec (OCCN) *
Track 2 : Dax B Offset Distance = 2013 ft (Set in Field)

TEMPLATE: track 3-Bi, Island
Track 3 : GCP Frequency = 430 Hz (Field,TCN)
Track 3 : Approach Distance = 1365 ft (Set in Field,TCN)
Track 3 : Prime Warning Time = 26 sec (OCCN) *
Track 3 : Prime UAX = IP (OCCN) *
Track 3 : Prime UAX Pickup = 15 sec (OCCN) *
Track 3 : GCP Transmit Level = Medium (Set in Field,TCN)
Track 3 : Isl Frequency = 13.2 kHz (Set in Field)

TEMPLATE: track 4-Remote Prime
Track 4 : GCP Frequency = 970 Hz (Field,TCN)
Track 4 : Approach Distance = 494 ft (Set in Field,TCN)
Track 4 : Prime Offset Distance = 99 ft (Set in Field)
Track 4 : GCP Transmit Level = Medium (Set in Field,TCN)

TEMPLATE: track 4 Daxes
Track 4 : Dax A Used = Yes (OCCN) *
Track 4 : Dax A Warning Time = 26 sec (OCCN) *
Track 4 : Dax A Offset Distance = 269 ft (Set in Field)

TEMPLATE: track Anding
AND 2 Used = Yes (OCCN) *

TEMPLATE: AND 1 XR
AND 1 XR Track 2 = Dax A (OCCN) *
AND 1 XR Track 4 = Dax A (OCCN) *
AND 1 Enable Used = Yes (OCCN) *

TEMPLATE: AND 2
AND 2 Track 2 = Dax B (OCCN) *
AND 2 Enable Used = Yes (OCCN) *

TEMPLATE: SSCC
SSCC 1 : Lamp Neutral Test = Off (Set in Field)
SSCC 2 : Lamp Neutral Test = Off (Set in Field)

TEMPLATE: OOS
OOS Control = OOS IPs (OCCN) *
T2 OOS Control = None (OCCN) *
T4 OOS Control = None (OCCN) *

TEMPLATE: OP assignment 1
OUT 1.1 = AND 2 (OCCN) *

TEMPLATE: IP assignment 1
IN 1.1 = AND 1 XR Enable (OCCN) *
IN 1.2 = Out Of Service IP 1 (OCCN) *
IN 2.1 = AND 2 Enable (OCCN) *
IN 3.2 = Out Of Service IP 3 (OCCN) *

TEMPLATE: IP assignment SSCC
IN 7.1 = AND 1 XR Enable (OCCN) *

PREDICTORS: track 2
Track 2 : Prime Used = No (OCCN) *

PREDICTORS: track 4
Track 4 : Prime Used = No (OCCN) *

GCP: track 1
Track 1 : Island Distance = 127 ft (Set in Field,TCN)

GCP: track 3
Track 3 : Island Distance = 127 ft (Set in Field,TCN)

ADVANCED: internal I/O 1
Int.1 Sets = T1 Prime UAX (OCCN) *
Int.1 Set by = T2 Dax A (OCCN) *
Int.2 Sets = T3 Prime UAX (OCCN) *
Int.2 Set by = T4 Dax A (OCCN) *

ADVANCED: site options
Daylight Savings = On (Set in Field)

* Parameter is part of office check number calculation.

Check Numbers

Office Check Number: 72C95D87
Config. Check Number: 71A52910
(Based on MCF Revision 24)

Parameters not part of office check number calculation:

Track 1 : GCP Frequency = 285 Hz
Track 1 : Approach Distance = 3184 ft (Set in Field)
Track 1 : GCP Transmit Level = Medium (Set in Field)
Track 1 : Isl Frequency = 10.0 kHz
Track 2 : GCP Frequency = 645 Hz
Track 2 : Approach Distance = 600 ft (Set in Field)
Track 2 : Prime Offset Distance = 99 ft (Set in Field)
Track 2 : GCP Transmit Level = Medium (Set in Field)
Track 2 : Dax A Offset Distance = 269 ft (Set in Field)
Track 2 : Dax B Offset Distance = 2013 ft (Set in Field)
Track 3 : GCP Frequency = 430 Hz
Track 3 : Approach Distance = 1365 ft (Set in Field)
Track 3 : GCP Transmit Level = Medium (Set in Field)
Track 3 : Isl Frequency = 13.2 kHz
Track 4 : GCP Frequency = 970 Hz
Track 4 : Approach Distance = 494 ft (Set in Field)
Track 4 : Prime Offset Distance = 99 ft (Set in Field)
Track 4 : GCP Transmit Level = Medium (Set in Field)
Track 4 : Dax A Offset Distance = 269 ft (Set in Field)
SSCC 1 : Lamp Neutral Test = Off (Set in Field)
SSCC 2 : Lamp Neutral Test = Off (Set in Field)
Track 1 : Island Distance = 127 ft (Set in Field)
Track 3 : Island Distance = 127 ft (Set in Field)
Daylight Savings = On (Set in Field)

Comments

<none>

Configuration Package File

Filename: 030221303_542136J.pac
Path: H:\01-Xing\upT10240\GCP Programs\M.P. 213.03\
Date/Time: 4/30/2012 10:46:40

NEW SHEET

Designed: 12/22/11
INSTALL FLS/GATES & CONSTANT WARNING AT E 26TH ROAD M.P. 213.03
Rec*: WO*: 11993 /JPW
IS: / /CTC/JTB

NOTE: Actual OFFSET and ISLAND distances must be verified by field personnel.

UNION PACIFIC
QUALITY PRODUCTIVITY SAFETY
SIGNAL DESIGN

Date:	12/22/11
Des:	CTC
Chk:	JPW
AFE:	11993

UNION PACIFIC RAILROAD
OHLMAN, ILLINOIS
E 26TH ROAD
PANA SUBDIVISION
Office of Sr AVP Engineering - Signal/TCO Omaha, Nebraska

Sh.:	3A
DOT	542136J
MP:	213.03
ID:	030221303.3AX

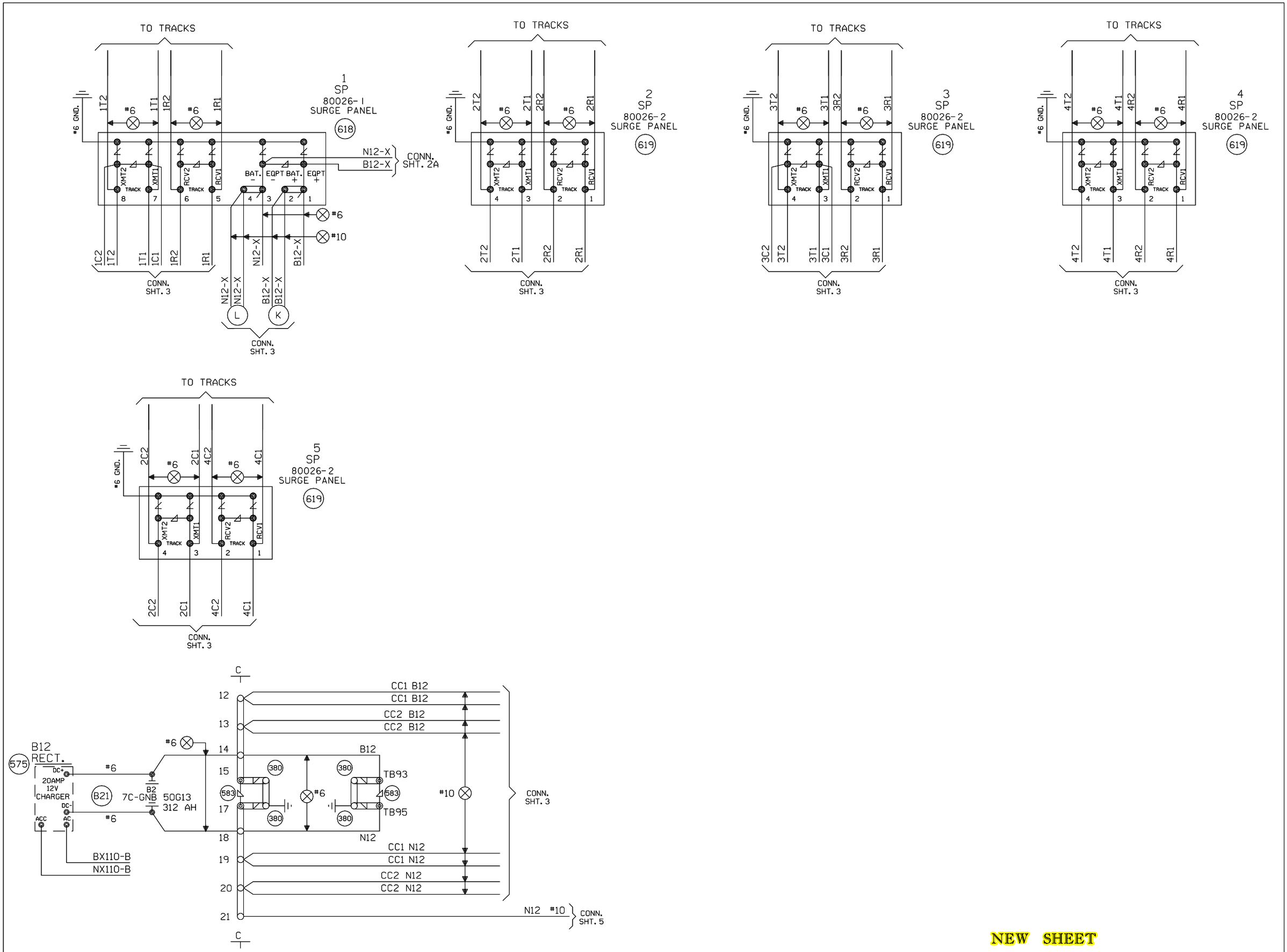

NEW SHEET

Designed: 12/22/11 INSTALL FLS/GATES & CONSTANT WARNING AT E 26TH ROAD M.P. 213.03 Rec#: WO#: 11993 IS: /JPW /CTC/JTB	MODIFICATION LEVEL		UNION PACIFIC QUALITY PRODUCTIVITY SAFETY SIGNAL DESIGN	Date: 12/22/11 Des: CTC Chk: JPW AFE: 11993	UNION PACIFIC RAILROAD OHLMAN, ILLINOIS E 26TH ROAD PANA SUBDIVISION Office of Sr AVP Engineering - Signal/TCO Omaha, Nebraska	Sh.: 4 DOT 542136J MP: 213.03 ID: 030221303.4X
	Q. A. LAST LEVEL CHECKED	DU				
	LAST LEVEL MOD THIS TYPICAL	DU				
	LAST LEVEL BY DESIGNER	DU				
	CHANGED FROM TYPICAL?	Y				
	REV 01.24.11 4K 4TKSPGFC.4					

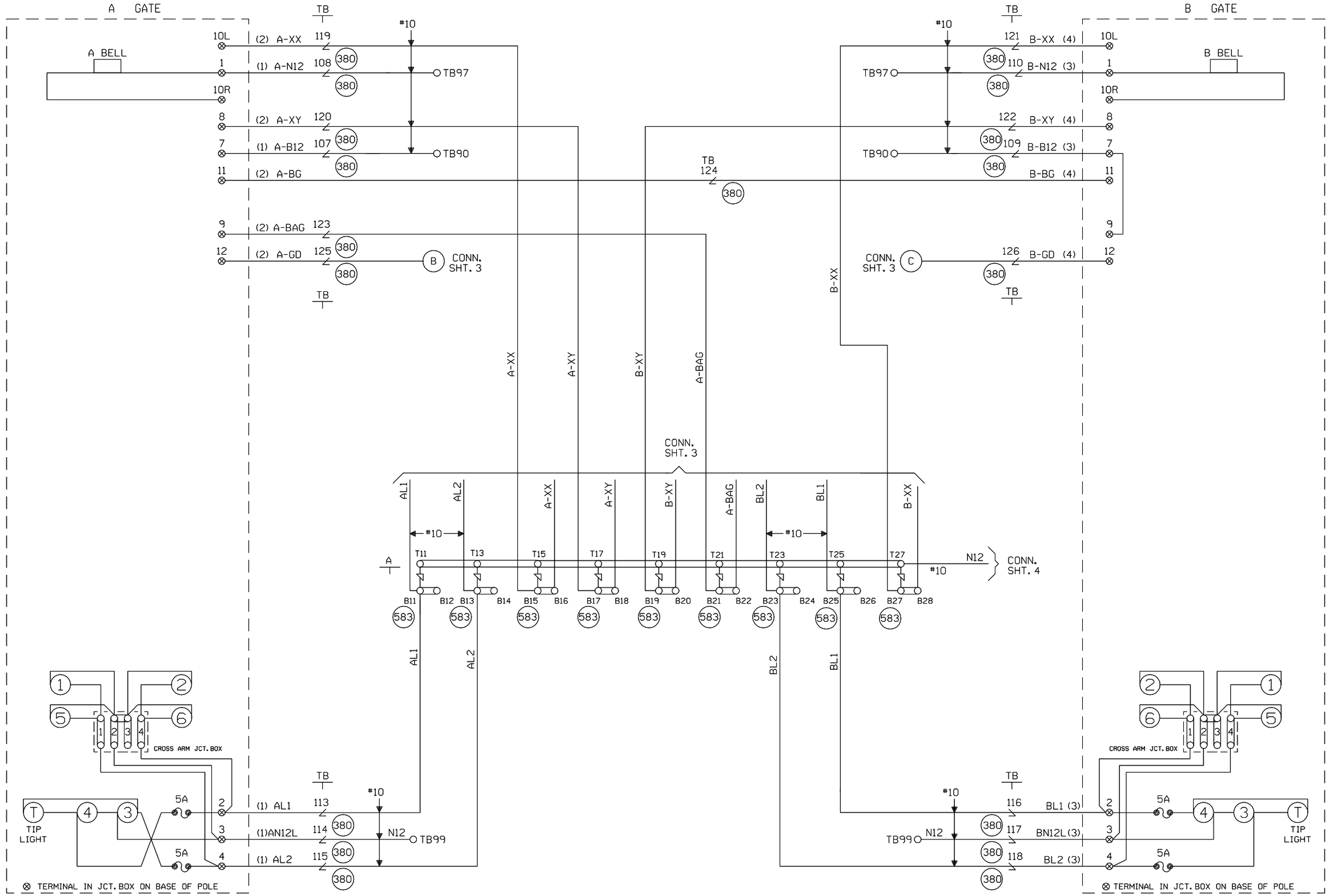

CABLE TABULATION

CABLE NO. 1 5C. NO.6 U.G.B.T. TO GATE A
CABLE NO. 2 7C. NO.14 U.G.B.T. TO GATE A
CABLE NO. 3 5C. NO.6 U.G.B.T. TO GATE B
CABLE NO. 4 7C. NO.14 U.G.B.T. TO GATE B

NEW SHEET

Designed: 12/22/11
INSTALL FLS/GATES & CONSTANT WARNING AT E 26TH ROAD M.P. 213.03
Rec#: WO#: 11993
IS: /JPW / /CTC/JTB

MODIFICATION LEVEL	
Q. A. LAST LEVEL CHECKED	DU
LAST LEVEL MOD THIS TYPICAL	DU
LAST LEVEL BY DESIGNER	DU
CHANGED FROM TYPICAL?	Y

REV 01.24.11 4K GFSLTYP.5

UNION PACIFIC
QUALITY PRODUCTIVITY SAFETY
SIGNAL DESIGN

Date: 12/22/11
Des: CTC
Chk: JPW
AFE: 11993

UNION PACIFIC RAILROAD
OHLMAN, ILLINOIS
E 26TH ROAD
PANA SUBDIVISION
Office of Sr AVP Engineering - Signal/TCO Omaha, Nebraska

Sh.: 5
DOT 542136J
MP: 213.03
ID: 030221303.5X