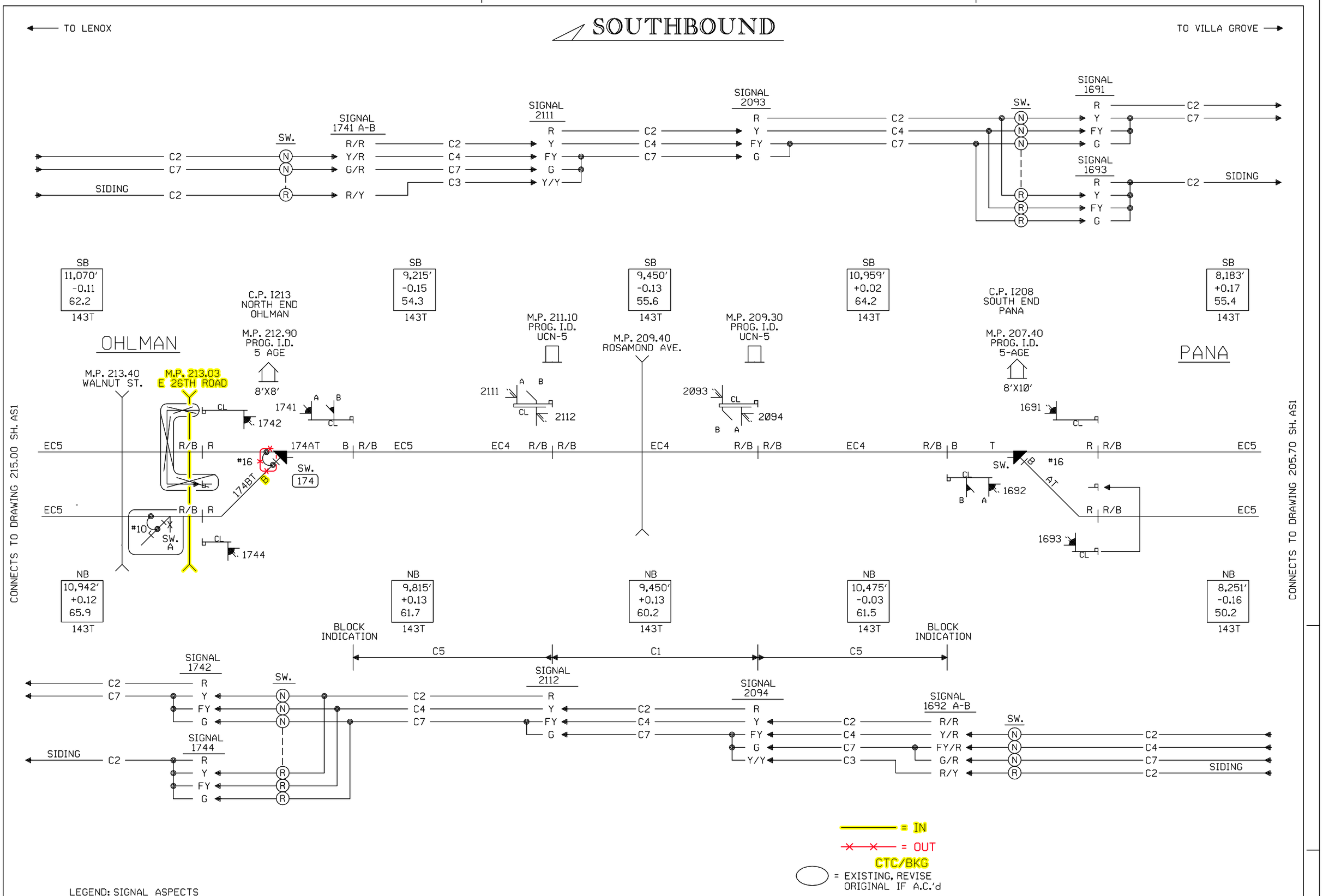
SOUTHBOUND
TO LENOX
TO VILLA GROVE
SIGNAL 1741 A-B
SIGNAL 2111
SIGNAL 2093
SIGNAL 1691
SIGNAL 1693
SW.
SIDING
SB 11,070′ -0.11 62.2 143T
SB 9,215′ -0.15 54.3 143T
SB 9,450′ -0.13 55.6 143T
SB 10,959′ +0.02 64.2 143T
SB 8,183′ +0.17 55.4 143T
C.P. 1213 NORTH END OHLMAN
M.P. 212.90 PROG. I.D. 5 AGE
8′X8′
M.P. 211.10 PROG. I.D. UCN-5
M.P. 209.40 ROSAMOND AVE.
M.P. 209.30 PROG. I.D. UCN-5
C.P. 1208 SOUTH END PANA
M.P. 207.40 PROG. I.D. 5-AGE
8′X10′
OHLMAN
PANA
M.P. 213.40 WALNUT ST.
M.P. 213.03 E 26TH ROAD
CONNECTS TO DRAWING 215.00 SH. AS1
CONNECTS TO DRAWING 205.70 SH. AS1
NB 10,942′ +0.12 65.9 143T
NB 9,815′ +0.13 61.7 143T
NB 9,450′ +0.13 60.2 143T
NB 10,475′ -0.03 61.5 143T
NB 8,251′ -0.16 50.2 143T
BLOCK INDICATION
C5
C1
SIGNAL 1742
SIGNAL 1744
SIGNAL 2112
SIGNAL 2094
SIGNAL 1692 A-B
= IN
= OUT
CTC/BKG
= EXISTING, REVISE ORIGINAL IF A.C.'d
LEGEND: SIGNAL ASPECTS
R = RED
Y = YELLOW
FY=YELLOW
G = GREEN
D = DARK
R/R = DENOTES 2 UNIT SIGNAL
(N) = DENOTES NORMAL SWITCH
(R) = DENOTES REVERSE SWITCH
NORTHBOUND
DESIGN LEVEL II
PANA SUBDIVISION
SIGNAL ASPECT CHART
M.P. 207.40 TO ~~213.37~~ 213.40
DESIGN SPEED 60 M.P.H.
Designed: 12/22/11
INSTALL FLS/GATES & CONSTANT WARNING AT E 26TH ROAD M.P. 213.03
Rec#:
WO#: 11993
IS: /JPW / /CTC/JTB
REV. 11-6-06
INSTALLED E.C. BETWEEN ENDS OF SIDINGS AT PANA AND OHLMAN.
REC. #13382
2-24-06 JJL
KAB/WITT/ /JJF
UNION PACIFIC
SAFETY
SIGNAL DESIGN
DES: JJF
DIG: JJF
CHK: JJL
A.F.E. 53559
ID= 030220740.AS1
UNION PACIFIC RAILROAD
VILLA GROVE, ILLINOIS
TO LENOX, ILLINOIS
C.T.C. CIRCUITS
OFFICE OF CHIEF ENG'R
OMAHA NEBR.
DATE 2-22-05
SHEET AS1
DWG 207.40
S-302-M

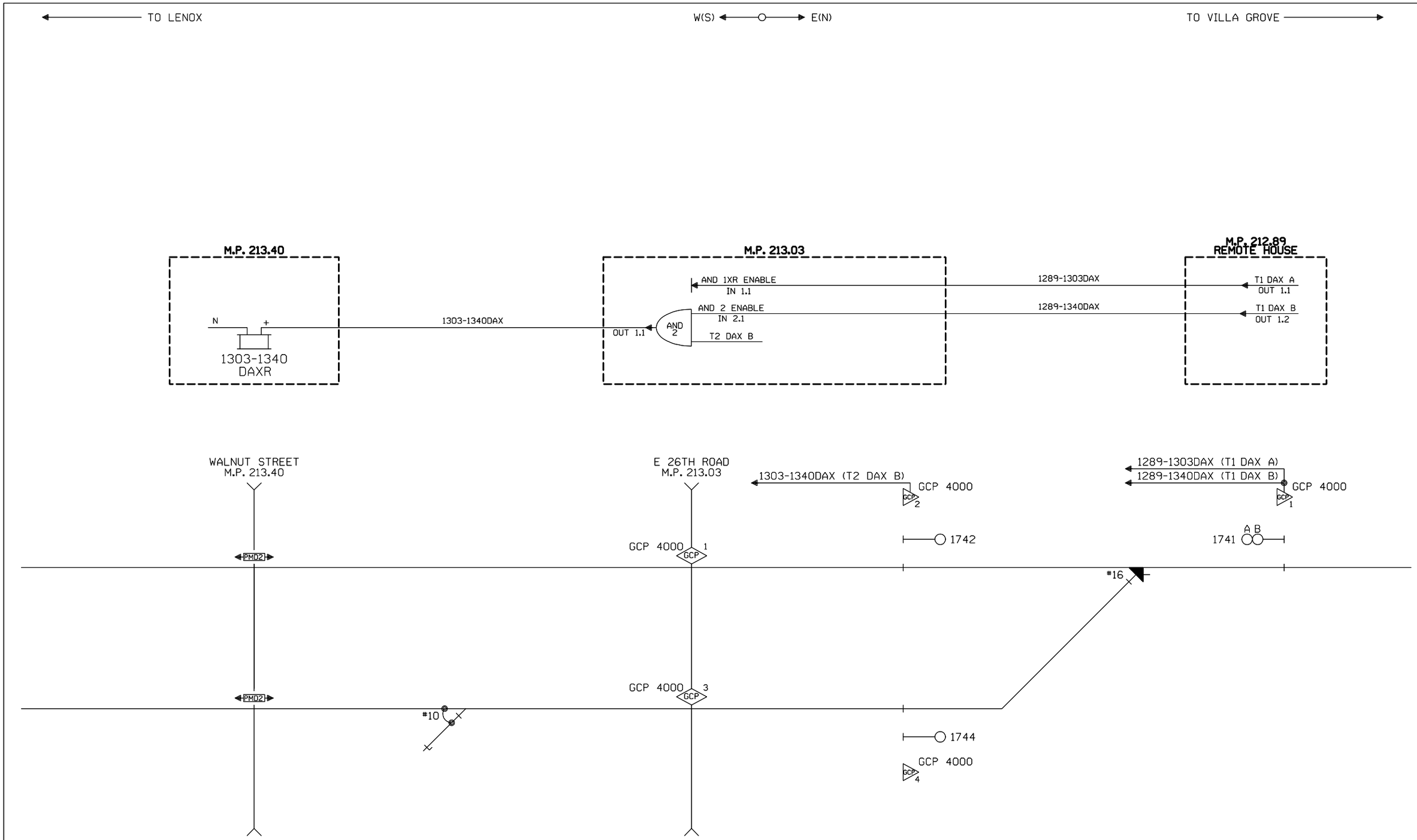

NEW SHEET

							Designed: 12/22/11 INSTALL FLS/GATES & CONSTANT WARNING AT E 26TH ROAD M.P. 213.03 Rec#: WO#: 11993 IS: /JPW / /CTC/JTB	UNION PACIFIC QUALITY PRODUCTIVITY SAFETY SIGNAL DESIGN	Date: 12/22/11 Des: CTC Chk: JPW AFE: 11993	UNION PACIFIC RAILROAD DAX CHART OHLMAN, ILLINOIS PANA SUBDIVISION Office of Sr AVP Engineering - Signal/TCO Omaha, Nebraska	Sh.: DAX1 From M.P. 213.40 To MP: 212.89 ID: 030221303.DAX1

(REV. 01.01.05) (4KDAXLAYOUT)

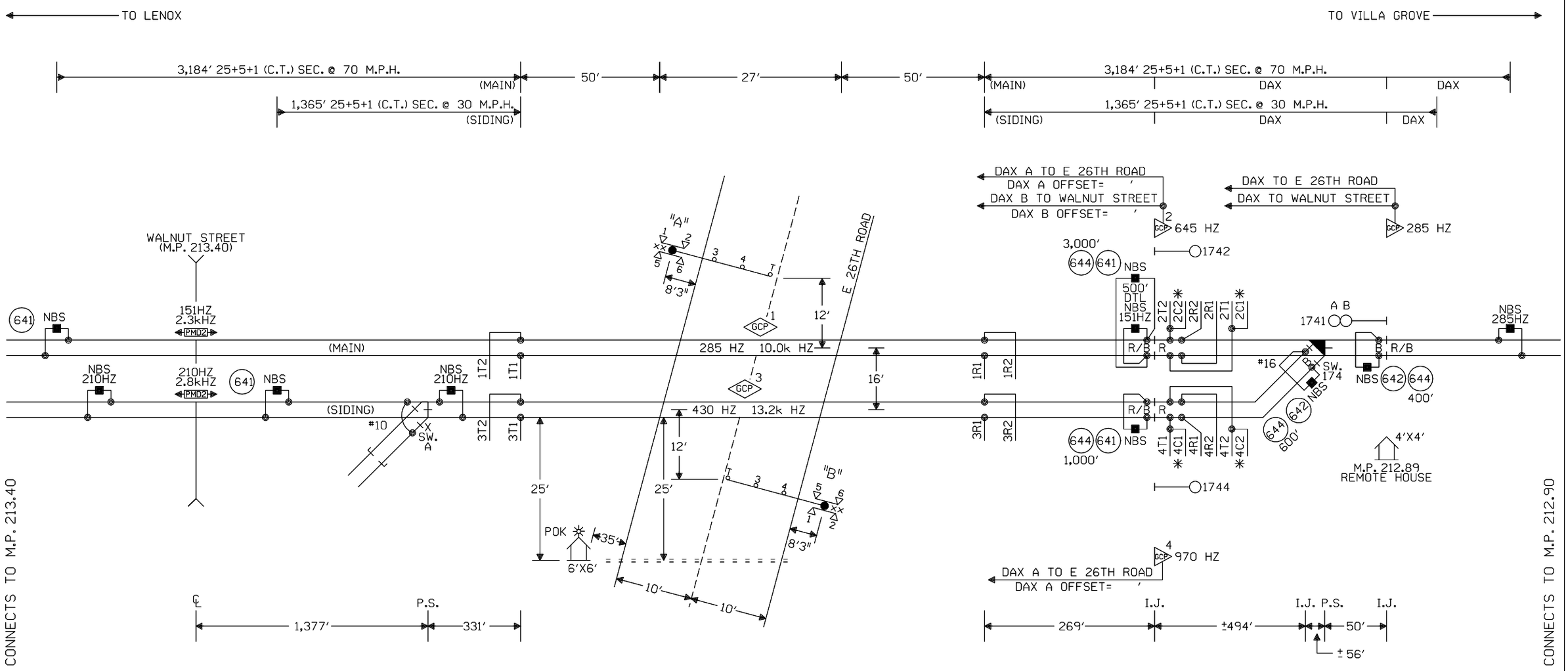

NOTES:

⊗ = TWISTED WIRES
INSULATED 1 TWIST PER FT.
ALL TRACK WIRES 2C. #6

TRANSMITTER AND RECEIVER LEADS TO BE SEPARATED BY AT LEAST 12" IN TRENCH, LENGTHS SHOULD NOT EXCEED MANUFACTURER'S RECOMMENDATION.

TOP OF FOUNDATION TO BE AT SAME ELEVATION AS THE SURFACE OF THE TRAVELED WAY & NO MORE THAN 4" ABOVE THE SURFACE OF THE GROUND.

ALL BUNGALOW WIRING TO BE #16 AWG FLEX UNLESS OTHERWISE SPECIFIED EXCEPT ALL GROUND WIRE TO BE #6 AWG FLEX OR LARGER.

ALL WIRING IN GATE MECHANISM TO BE #10 "AWG FLEX".

REFER TO UP STANDARD DWG FOR BUNGALOW GROUNDING.

PORTABLE GENERATOR EXTENSION CORD FOR 240V TO 240V IS PROVIDED AS WELL AS A 120V TO 240V ADAPTER.

ALL LIGHTS TO BE 12" ROUNDELS.

= = = = = = 4" X 50' CONDUIT

LIGHTS: LED LIGHTS

GATE A: 18'
GATE B: 18'

xx = BELL

✳ TIE THE CHECK AND TRANSMIT TRACK WIRES TOGETHER AT OR NEAR THE BOOTLEG CONNECTION AND RUN A SINGLE WIRE TO THE RAIL.

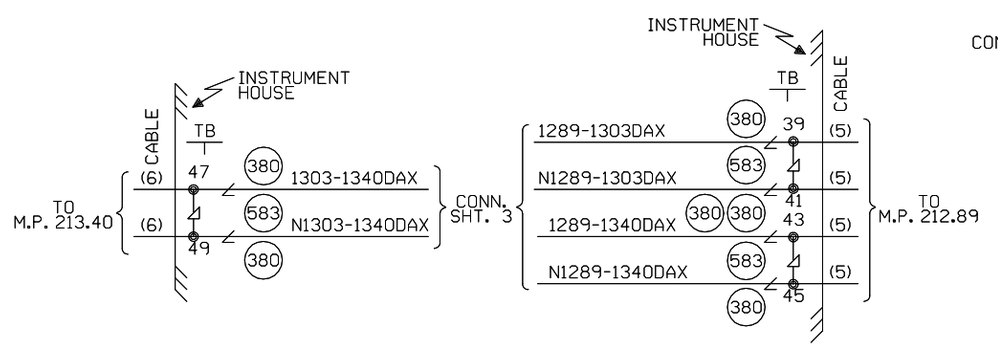

CONSTRUCTION NOTES:

1. INSTALL IN CONJUNCTION WITH REMOTE LOCATION AT M.P. 212.89 (W.O. 11993).
2. GATE PLACEMENT BASED ON 20' WIDE ROAD.
3. HOUSE PLACEMENT NEEDS TO BE VERIFIED BY ICC.

W(S) ← → E(N)

CABLE TABULATION

CABLE NO.5 7C#14 U.G.B.T. HOUSE TO M.P. 212.89
CABLE NO.6 7C#14 U.G.B.T. HOUSE TO M.P. 213.40

NEW SHEET

Designed: 12/22/11
INSTALL FLS/GATES & CONSTANT WARNING AT E 26TH ROAD M.P. 213.03
Rec#: WO#: 11993
IS: /JPW
/CTC/JTB

MODIFICATION LEVEL	
Q.A. LAST LEVEL CHECKED	DU
LAST LEVEL MOD THIS TYPICAL	DU
LAST LEVEL BY DESIGNER	DU
CHANGED FROM TYPICAL?	Y
REV 01.24.11 4K 2TKUGTYP.1	

UNION PACIFIC
QUALITY PRODUCTIVITY SAFETY
SIGNAL DESIGN

Date: 12/22/11
Des: CTC
Chk: JPW
AFE: 11993

UNION PACIFIC RAILROAD
OHLMAN, ILLINOIS
E 26TH ROAD
PANA SUBDIVISION
Office of Sr AVP Engineering - Signal/TCO Omaha, Nebraska

Sh.: 1
DOT 542136J
MP: 213.03
ID: 030221303.1X

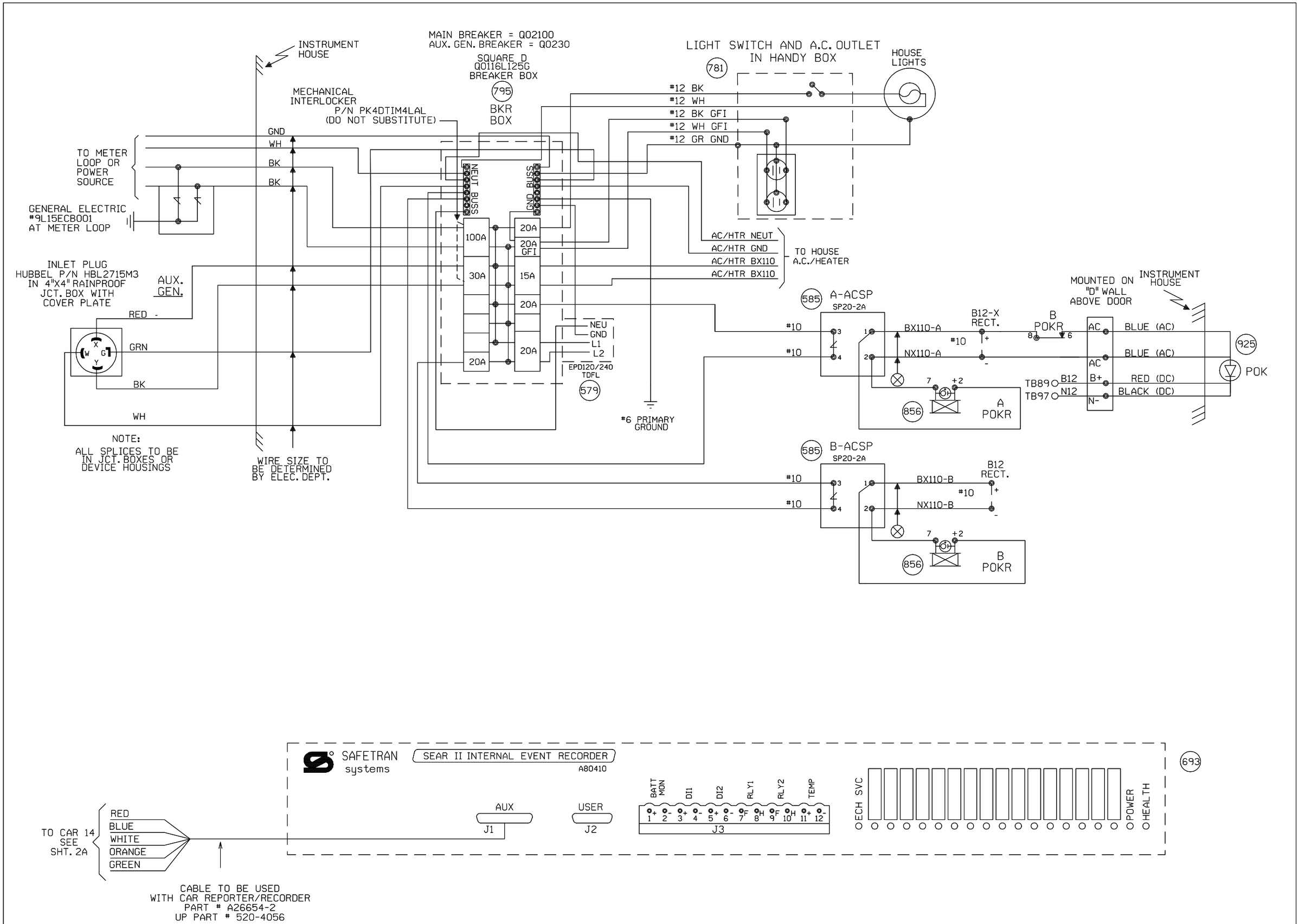

NEW SHEET

Designed: 12/22/11 INSTALL FLS/GATES & CONSTANT WARNING AT E 26TH ROAD M.P. 213.03 Rec#: WO#: 11993 IS: /JPW /CTC/JTB	MODIFICATION LEVEL		UNION PACIFIC QUALITY PRODUCTIVITY SAFETY SIGNAL DESIGN	Date: 12/22/11	UNION PACIFIC RAILROAD	Sh.: 2
	Q.A. LAST LEVEL CHECKED	DU		Des: CTC	OHLMAN, ILLINOIS	DOT 542136J
	LAST LEVEL MOD THIS TYPICAL	DU		Chk: JPW	E 26TH ROAD	MP: 213.03
	LAST LEVEL BY DESIGNER	DU		AFE: 11993	PANA SUBDIVISION	ID: 030221303.2X
	CHANGED FROM TYPICAL?	Y			Office of Sr AVP Engineering - Signal/TCO Omaha, Nebraska	
	REV 01.24.11 4K SEARAC.2					

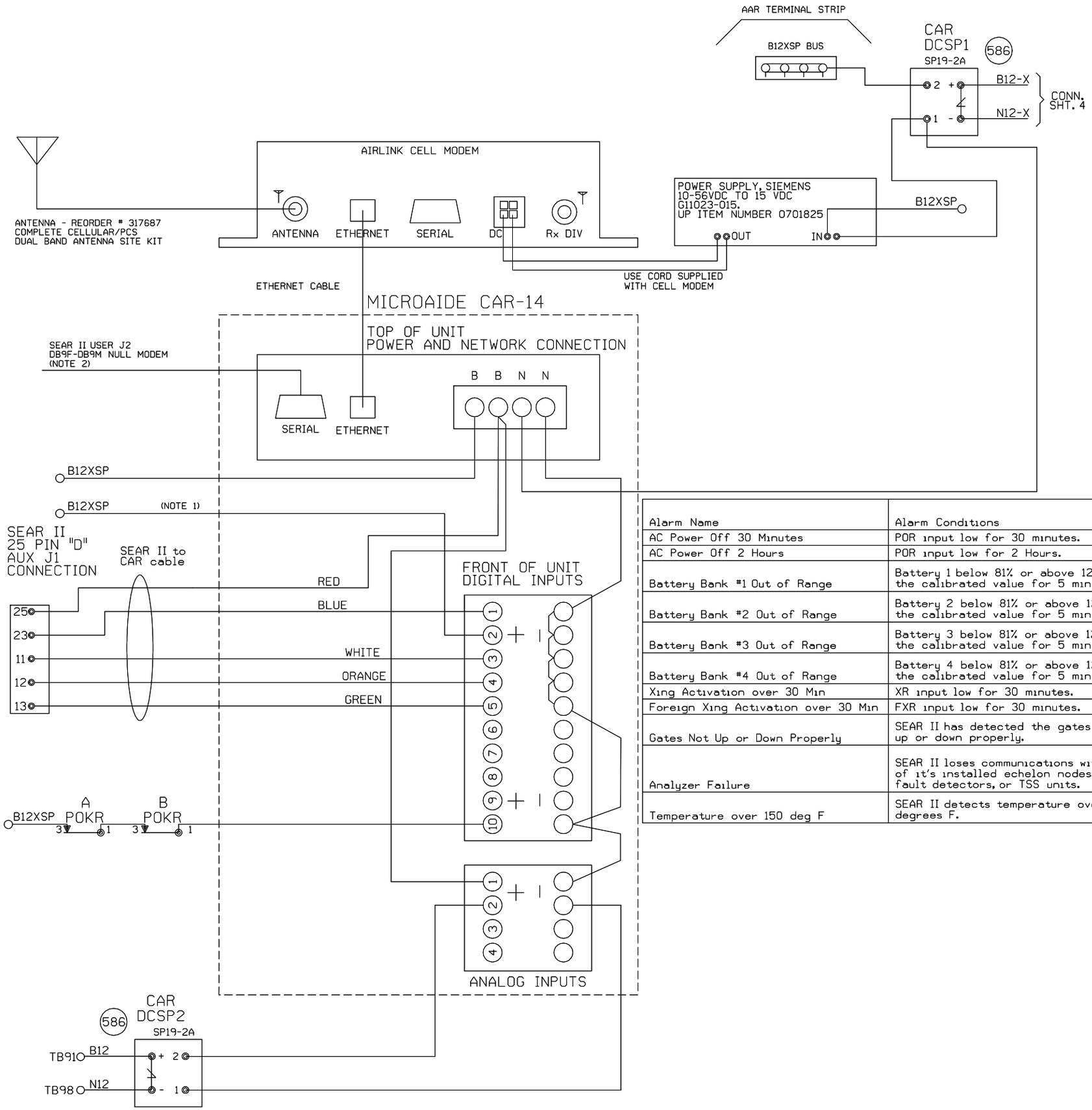

NOTE:
1) DO NOT JUMPER UNUSED INPUTS
2) THE CAR14 SERIAL PORT IS AVAILABLE TO ADD REMOTE CONNECTIVITY TO EXISTING LOGGING EQUIPMENT. USE NULL MODEM CABLE WITH SHIELDING DISCONNECTED AT ONE OR BOTH SIDES.

ANALOG INPUTS:
A1) B12X BATTERY BANK
A2) B12 BATTERY BANK
A3) BATTERY BANK 3
A4) BATTERY BANK 4

DIGITAL INPUTS
D1) XR (BLUE WIRE)
D2) FOREIGN XR
D3) ANALYZER FAILURE (WHITE WIRE)
D4) HIGH TEMPERATURE (ORANGE WIRE)
D5) GATES NOT UP OR DOWN PROPERLY (GREEN WIRE)
D10) POWER OFF INDICATION

Alarm Name	Alarm Conditions	Alarm Clearing Conditions	Cleared by Maintainer Mode?
AC Power Off 30 Minutes	POR input low for 30 minutes.	POR input high for 5 minutes.	No
AC Power Off 2 Hours	POR input low for 2 Hours.	POR input high for 5 minutes.	No
Battery Bank #1 Out of Range	Battery 1 below 81% or above 120% of the calibrated value for 5 minutes.	Battery 1 within acceptable range for 5 minutes.	No
Battery Bank #2 Out of Range	Battery 2 below 81% or above 120% of the calibrated value for 5 minutes.	Battery 2 within acceptable range for 5 minutes.	No
Battery Bank #3 Out of Range	Battery 3 below 81% or above 120% of the calibrated value for 5 minutes.	Battery 3 within acceptable range for 5 minutes.	No
Battery Bank #4 Out of Range	Battery 4 below 81% or above 120% of the calibrated value for 5 minutes.	Battery 4 within acceptable range for 5 minutes.	No
Xing Activation over 30 Min	XR input low for 30 minutes.	XR input high for 10 seconds.	Yes
Foreign Xing Activation over 30 Min	FXR input low for 30 minutes.	FXR input high for 10 seconds.	Yes
Gates Not Up or Down Properly	SEAR II has detected the gates are not up or down properly.	SEAR II has detected the gates are up or down properly.	No
Analyzer Failure	SEAR II loses communications with any of it's installed echelon nodes, ground fault detectors, or TSS units.	SEAR II has recovered after an analyzer failure alarm.	No
Temperature over 150 deg F	SEAR II detects temperature over 150 degrees F.	SEAR II sensor detects temperature is OK after a High-Temp alarm.	No

NEW SHEET

Designed: 12/22/11
INSTALL FLS/GATES & CONSTANT WARNING AT E 26TH ROAD M.P. 213.03
Rec#:
IS:
WO#: 11993
/JPW
/CTC/JTB

MODIFICATION LEVEL	
Q.A. LAST LEVEL CHECKED	DU
LAST LEVEL MOD THIS TYPICAL	DU
LAST LEVEL BY DESIGNER	DU
CHANGED FROM TYPICAL?	Y

REV 01.24.11 4K ACDCCAR14SII.3

UNION PACIFIC
QUALITY PRODUCTIVITY SAFETY
SIGNAL DESIGN

Date: 12/22/11
Des: CTC
Chk: JPW
AFE: 11993

UNION PACIFIC RAILROAD
OHLMAN, ILLINOIS
E 26TH ROAD
PANA SUBDIVISION
Office of Sr AVP Engineering - Signal/TCO Omaha, Nebraska

Sh.: 2A
DOT 542136J
MP: 213.03
ID: 030221303.2AX