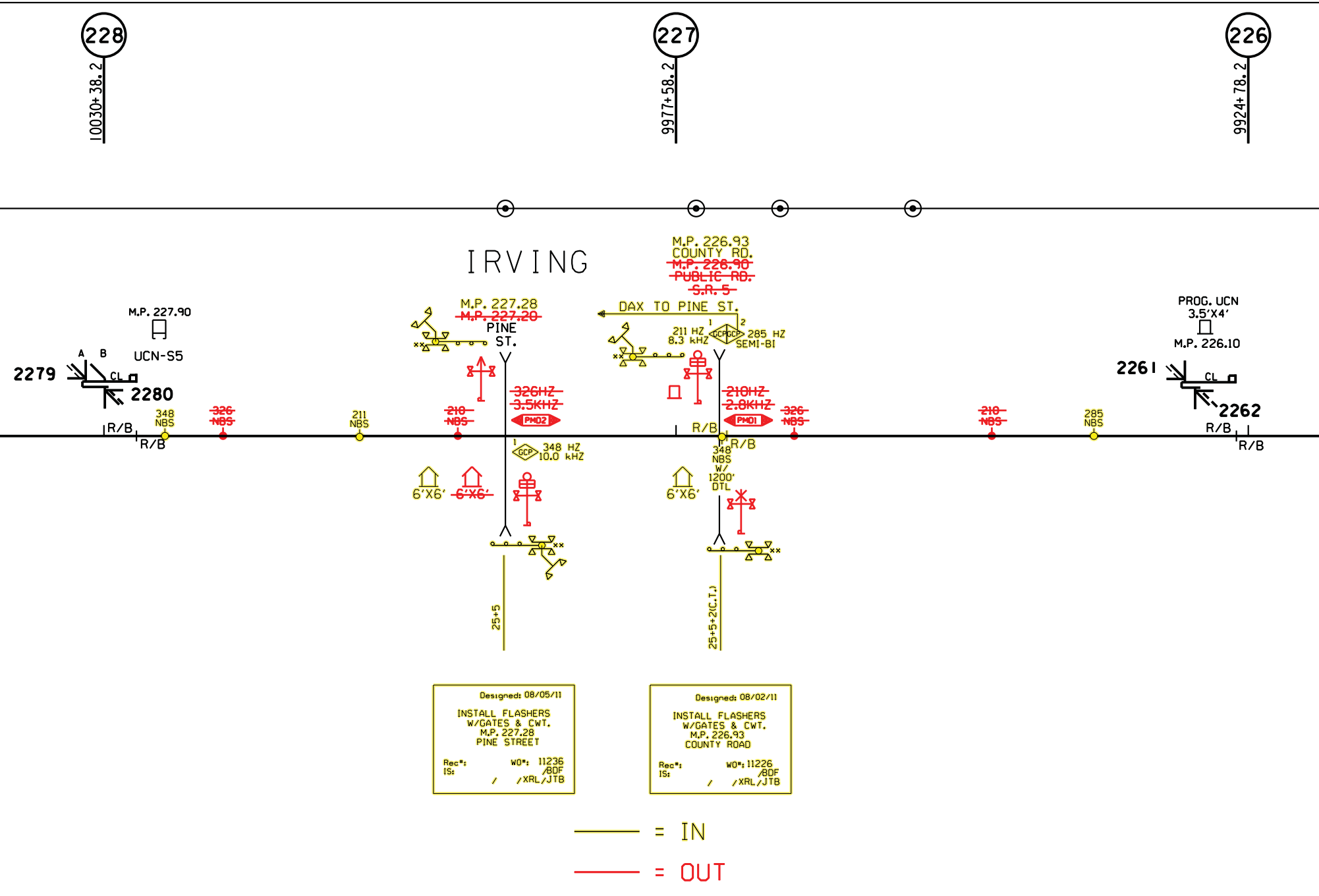
228
10030+38.2
227
9977+58.2
226
9924+78.2
IRVING
M.P. 226.93
COUNTY RD.
~~M.P. 226.90~~
~~PUBLIC RD.~~
~~S.R. 5~~
M.P. 227.90
UCN-S5
A
B
CL
2279
2280
M.P. 227.28
~~M.P. 227.20~~
PINE
ST.
DAX TO PINE ST.
211 HZ
8.3 kHZ
GCP
GCP
285 HZ
SEMI-BI
PROG. UCN
3.5'X4'
M.P. 226.10
2261
2262
~~326HZ~~
~~3.5KHZ~~
PHO2
~~210HZ~~
~~2.8KHZ~~
PHO1
348
NBS
~~326~~
~~NBS~~
211
NBS
~~210~~
~~NBS~~
R/B
GCP
348 HZ
10.0 kHZ
348
NBS
W/
1200'
DTL
285
NBS
6'X6'
~~6'X6'~~
25+5
25+5+2(C.T.)
Designed: 08/05/11
INSTALL FLASHERS
W/GATES & CWT.
M.P. 227.28
PINE STREET
Rec#:
IS:
WO#: 11236
/BDF
/ /XRL/JTB
Designed: 08/02/11
INSTALL FLASHERS
W/GATES & CWT.
M.P. 226.93
COUNTY ROAD
Rec#:
IS:
WO#: 11226
/BDF
/ /XRL/JTB
= IN
= OUT
655
-0.19
657
V.C.
656
+0.24
653
V.C.
653
-0.28
662
+0.12
660
+0.29
657
+0.21
656
V.C.
656
-0.28

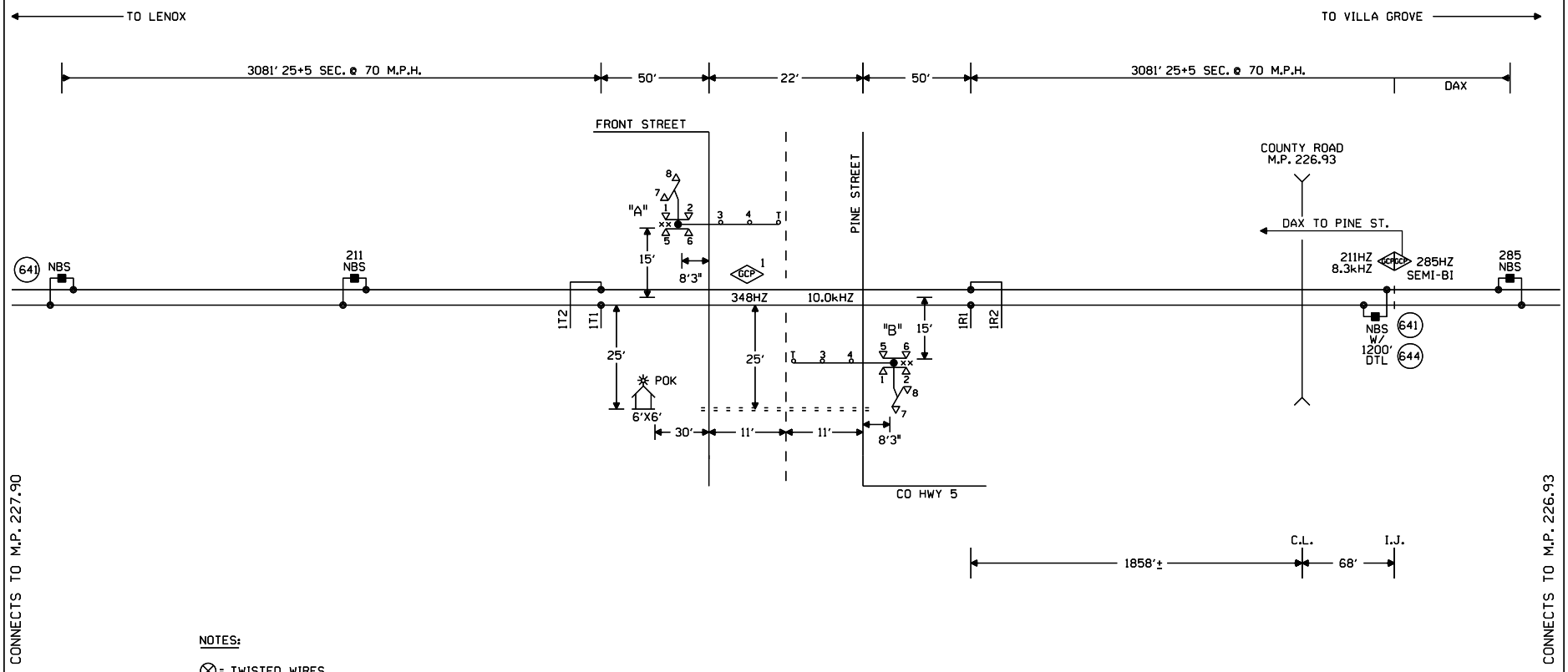

NOTES:

⊗ = TWISTED WIRES
INSULATED 1 TWIST PER FT.
ALL TRACK WIRES 2C. #6

TRANSMITTER AND RECEIVER LEADS TO BE SEPARATED BY AT LEAST 12" IN TRENCH, LENGTHS SHOULD NOT EXCEED MANUFACTURES RECOMMENDATION.

TOP OF FOUNDATION TO BE AT SAME ELEVATION AS THE SURFACE OF THE TRAVELED WAY & NO MORE THAN 4" ABOVE THE SURFACE OF THE GROUND.

ALL BUNGALOW WIRING TO BE #16 AWG FLEX UNLESS OTHERWISE SPECIFIED EXCEPT ALL GROUND WIRE TO BE #6 AWG FLEX OR LARGER.

ALL WIRING IN GATE MECHANISM TO BE #10 "AWG FLEX".

REFER TO UP STANDARD DWG FOR BUNGALOW GROUNDING.

PORTABLE GENERATOR EXTENSION CORD FOR 240V TO 240V IS PROVIDED AS WELL AS A 120V TO 240V ADAPTER.

ALL LIGHTS TO BE 12" ROUNDELS.

= = = = = = 4" X 50' CONDUIT

LIGHTS: LED LIGHTS

GATE A: 19'
GATE B: 19'

xx = BELL

CONSTRUCTION NOTES

1. ORDER AND INSTALL 2000' 7C#14 CABLE BETWEEN THIS LOCATION AND M.P. 226.93.

2. TO BE INSTALLED IN CONJUNCTION WITH W.O. 11226. IF THESE PROJECTS ARE NOT INSTALLED IN CONJUNCTION WITH EACH OTHER, FIELD AND SHOP WILL NEED TO MAKE CHANGES ACCORDINGLY.

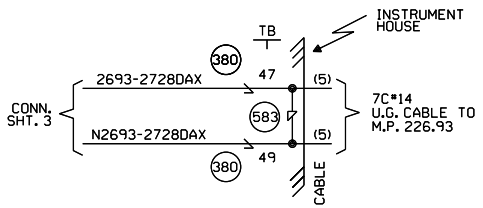

W(S) ←—○—→ E(N)

CABLE TABULATION

CABLE NO.5 7C#14 U.G.B.T. HOUSE TO MP. 226.93

NEW SHEET

				Designed: 08/02/11 INSTALL FLASHERS W/GATES & CWT. M.P. 226.93 COUNTY ROAD Rec#: WO#: 11226 IS: /BDF / /XRL/JTB	Designed: 08/05/11 INSTALL FLASHERS W/GATES & CWT. M.P. 227.28 PINE STREET Rec#: WO#: 11236 IS: /BDF / /XRL/JTB	MODIFICATION LEVEL O. A. LAST LEVEL CHECKED DU LAST LEVEL MOD THIS TYPICAL DU LAST LEVEL BY DESIGNER DU CHANGED FROM TYPICAL? Y REV 01.24.11 4K 1TKBG.1	UNION PACIFIC QUALITY PRODUCTIVITY SAFETY SIGNAL DESIGN	Date: 08/05/11 Des: XRL Chk: BDF AFE: 11236	UNION PACIFIC RAILROAD IRVING, ILLINOIS PINE STREET PANA SUBDIVISION Office of Sr AVP Engineering - Signal/TCO Omaha, Nebraska	Sh.: 1 DOT 542159R MP: 227.28 ID: 030222728.1X

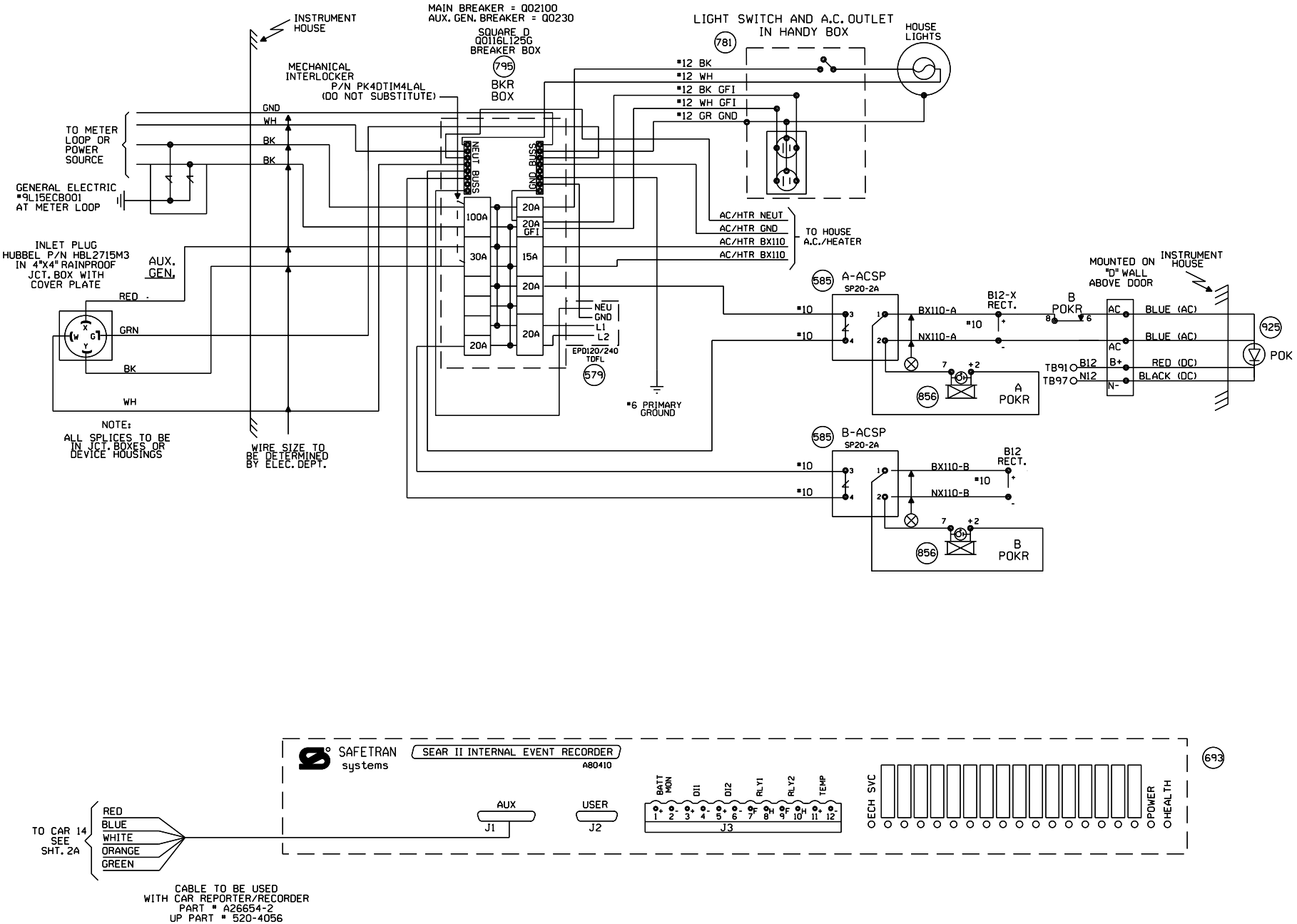

NEW SHEET

					Designed: 08/05/11 INSTALL FLASHERS W/GATES & CWT. M.P. 227.28 PINE STREET Rec#: WO#: 11236 IS: /WSD /XRL/JTB	MODIFICATION LEVEL O. A. LAST LEVEL CHECKED DU LAST LEVEL MOD THIS TYPICAL DU LAST LEVEL BY DESIGNER DU CHANGED FROM TYPICAL? Y REV 01.24.11 4K SEARAC.2	UNION PACIFIC QUALITY PRODUCTIVITY SAFETY SIGNAL DESIGN	Date: 08/05/11 Des: XRL Chk: WSD AFE: 11236	UNION PACIFIC RAILROAD IRVING, ILLINOIS PINE STREET PANA SUBDIVISION Office of Sr AVP Engineering - Signal/TCO Omaha, Nebraska	Sh.: 2 DOT 542159R MP: 227.28 ID: 030222728.2X

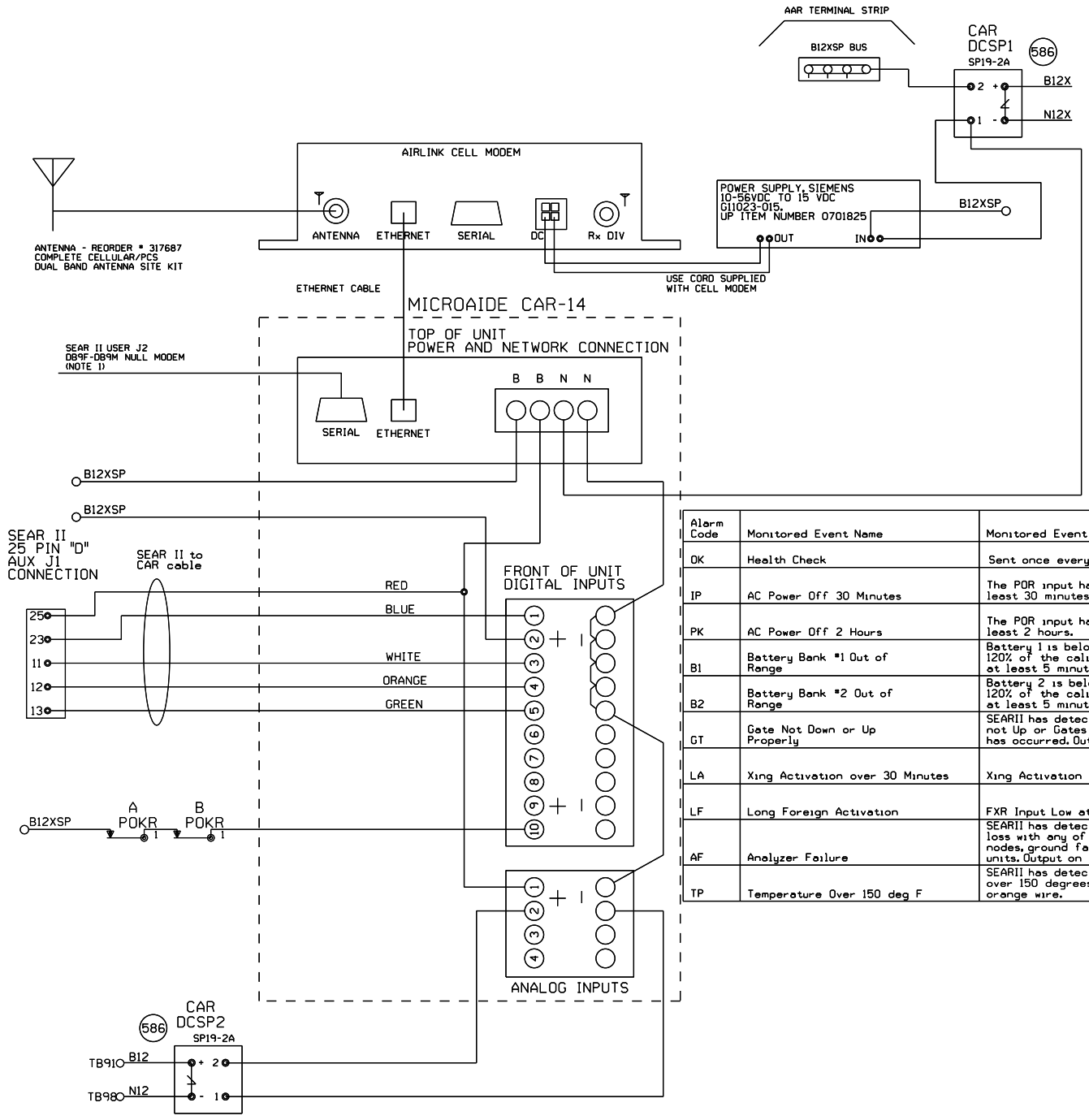

NOTE:
1) AT LOCATIONS WITH NO FOREIGN XR, JUMPER D2 TO B12XSP.
2) THE CAR14 SERIAL PORT IS AVAILABLE TO ADD REMOTE CONNECTIVITY TO THE SEARII. USE A DB9F TO DB9M NULL MODEM SERIAL CABLE.

ANALOG INPUTS:
A1) B12X BATTERY BANK, JUMPERED FROM CAR14 POWER INPUTS
A2) B12 BATTERY BANK
A3) AND A4) ARE AVAILABLE TO MONITOR ADDITIONAL BATTERY BANKS.

DIGITAL INPUTS (LOCATIONS WITH SEARII)
1) XR (BLUE WIRE)
2) FXR (FROM B12XSP THRU FRONT CONTACT)
3) ANALYZER FAILURE (WHITE WIRE)
4) HIGH TEMPERATURE (ORANGE WIRE)
5) GATES NOT UP OR DOWN PROPERLY (GREEN WIRE)
6)
7)
8)
9)
10) POWER OFF INDICATION: POR

Alarm Code	Monitored Event Name	Monitored Event Description	Alarm Cleared
OK	Health Check	Sent once every 48 hours.	
IP	AC Power Off 30 Minutes	The POR input has been down for at least 30 minutes.	The POR input comes back on for at least 5 minutes after an AC Power Off Alarm
PK	AC Power Off 2 Hours	The POR input has been down for at least 2 hours.	The POR input comes back on for at least 5 minutes after an AC Power Off Alarm
B1	Battery Bank #1 Out of Range	Battery 1 is below 81% or above 120% of the calibrated value for at least 5 minutes.	Battery 1 is within acceptable range for at least 5 minutes.
B2	Battery Bank #2 Out of Range	Battery 2 is below 81% or above 120% of the calibrated value for at least 5 minutes.	Battery 2 is within acceptable range for at least 5 minutes.
GT	Gate Not Down or Up Properly	SEARII has detected either a Gates not Up or Gates not Down alarm has occurred. Output on green wire.	The Gate Up or Gates Down indications indicated true after a Gate Not Down or Gate Not Up alarm was triggered.
LA	Xing Activation over 30 Minutes	Xing Activation over 30 Minutes	Crossing has recovered after a Long Activation Alarm had occurred.
LF	Long Foreign Activation	FXR Input Low at least 30 Minutes	FXR Input for 10 Sec.
AF	Analyzer Failure	SEARII has detected communication loss with any of its installed echelon nodes, ground fault detectors, or TSS units. Output on white wire.	Analyzer has recovered after an analyzer failure.
TP	Temperature Over 150 deg F	SEARII has detected temperature over 150 degrees F. Output on orange wire.	Temperature sensor inside SEAR detects temperature is OK after a Hi-Temp alarm.

NEW SHEET

Designed: 08/05/11
INSTALL FLASHERS W/GATES & CWT. M.P. 227.28 PINE STREET
Rec#: WO#: 11236
IS: /WSD
/ /XRL/JTB

MODIFICATION LEVEL	
O. A. LAST LEVEL CHECKED	DU
LAST LEVEL MOD THIS TYPICAL	DU
LAST LEVEL BY DESIGNER	DU
CHANGED FROM TYPICAL?	Y

Rev 01.24.11 4K ACDCCAR14SII.3

UNION PACIFIC
QUALITY PRODUCTIVITY SAFETY
SIGNAL DESIGN

Date: 08/05/11
Des: XRL
Chk: WSD
AFE: 11236

UNION PACIFIC RAILROAD
IRVING, ILLINOIS
PINE STREET
PANA SUBDIVISION
Office of Sr AVP Engineering - Signal/TCO Omaha, Nebraska

Sh.: 2A
DOT 542159R
MP: 227.28
ID: 030222728.2AX

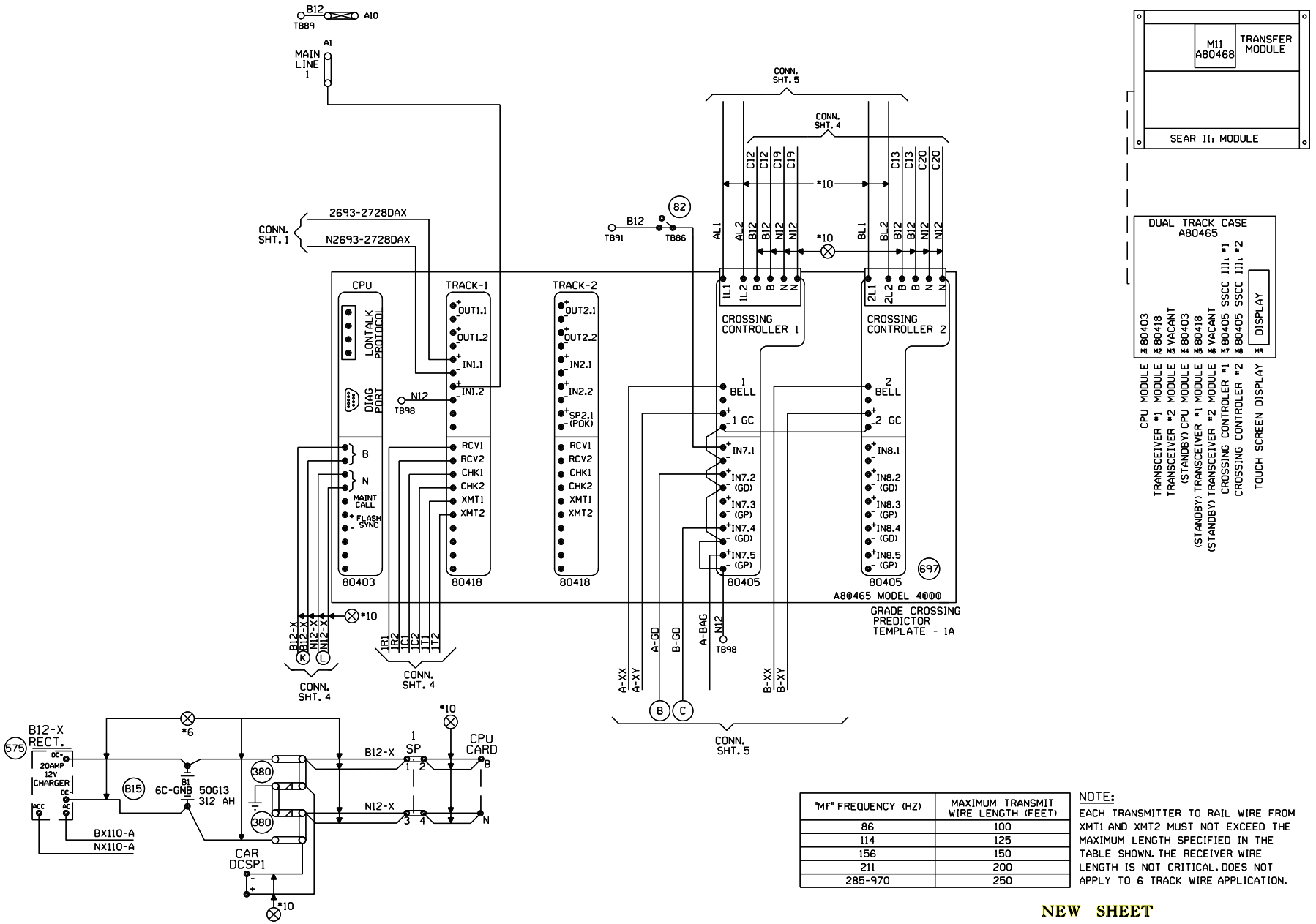

"Mf" FREQUENCY (HZ)	MAXIMUM TRANSMIT WIRE LENGTH (FEET)
86	100
114	125
156	150
211	200
285-970	250

NOTE:
EACH TRANSMITTER TO RAIL WIRE FROM XMT1 AND XMT2 MUST NOT EXCEED THE MAXIMUM LENGTH SPECIFIED IN THE TABLE SHOWN. THE RECEIVER WIRE LENGTH IS NOT CRITICAL. DOES NOT APPLY TO 6 TRACK WIRE APPLICATION.

NEW SHEET

Designed: 08/05/11
INSTALL FLASHERS W/GATES & CWT. M.P. 227.28 PINE STREET
Rec#: WO#: 11236
IS: /WSD /XRL/JTB

MODIFICATION LEVEL	
O. A. LAST LEVEL CHECKED	DU
LAST LEVEL MOD THIS TYPICAL	DU
LAST LEVEL BY DESIGNER	DU
CHANGED FROM TYPICAL?	Y

REV 01.24.11 4K 2TKGF.3

UNION PACIFIC
QUALITY PRODUCTIVITY SAFETY
SIGNAL DESIGN

Date: 08/05/11
Des: XRL
Chk: WSD
AFE: 11236

UNION PACIFIC RAILROAD
IRVING, ILLINOIS
PINE STREET
PANA SUBDIVISION
Office of Sr AVP Engineering - Signal/TCO Omaha, Nebraska

Sh.: 3
DOT 542159R
MP: 227.28
ID: 030222728.3X

Minimum Program Steps Report

Location and SIN

DOT Number: 542159R
Milepost Number: 227.28
Site Name: IRVING, IL

SIN: 762010010016 *

* Parameter is part of office check number calculation.

MCF and Template Selection

MCF Name: GCP-T6X-02-4.mcf
MCF Revision: 24
MCFCRC: 09FC363B

Template = 1A:6 Trk Bi (OCCN) *

* Parameter is part of office check number calculation.

Minimum Program Steps

TEMPLATE: track 1-Bi, Island
Track 1 : GCP Frequency = 348 Hz (Field,TCN)
Track 1 : Approach Distance = 3081 ft (Set in Field,TCN)
Track 1 : Prime Warning Time = 25 sec (OCCN) *
Track 1 : Prime UAX = IP (OCCN) *
Track 1 : Prime UAX Pickup = 15 sec (OCCN) *
Track 1 : GCP Transmit Level = Medium (Set in Field,TCN)
Track 1 : Isl Frequency = 10.0 kHz (Set in Field)

TEMPLATE: AND 1 XR
AND 1 Enable Used = Yes (OCCN) *

TEMPLATE: SSCC
SSCC 1 : Lamp Neutral Test = Off (Set in Field)
SSCC 2 : Lamp Neutral Test = Off (Set in Field)

TEMPLATE: OOS
OOS Control = OOS IPs (OCCN) *
OOS Timeout = 1 hrs (Set in Field) (Hidden)

TEMPLATE: IP assignment 1
IN 1.1 = T1 Prime UAX (OCCN) *
IN 1.2 = Out Of Service IP 1 (OCCN) *

TEMPLATE: IP assignment SSCC
IN 7.1 = AND 1 XR Enable (OCCN) *

GCP: track 1
Track 1 : Island Distance = 122 ft (Set in Field,TCN)

GCP: track 1 MS Control
Track 1 : EX Limiting Used = No (Set in Field)

ADVANCED: site options
Daylight Savings = On (Set in Field)

* Parameter is part of office check number calculation.

Check Numbers

Office Check Number: 2038C1E9
Config. Check Number: 6C02E7C8
(Based on MCF Revision 24)

Parameters not part of office check number calculation:

Track 1 : GCP Frequency = 348 Hz
Track 1 : Approach Distance = 3081 ft (Set in Field)
Track 1 : GCP Transmit Level = Medium (Set in Field)
Track 1 : Isl Frequency = 10.0 kHz
SSCC 1 : Lamp Neutral Test = Off (Set in Field)
SSCC 2 : Lamp Neutral Test = Off (Set in Field)
OOS Timeout = 1 hrs (Set in Field)
Track 1 : Island Distance = 122 ft (Set in Field)
Track 1 : EX Limiting Used = No (Set in Field)
Daylight Savings = On (Set in Field)

Comments

<none>

Configuration Package File

Filename: 030222728_542159R.pac
Path:
Date/Time: 11/21/2011 13:14:03

NEW SHEET

				Designed: 08/05/11 INSTALL FLASHERS W/GATES & CWT. M.P. 227.28 PINE STREET Rec*: WO*: 11236 /WSD IS: / /XRL/JTB	**NOTE: Actual OFFSET and ISLAND distances must be entered by field personnel.**	UNION PACIFIC QUALITY PRODUCTIVITY SAFETY SIGNAL DESIGN	Date: 08/05/11 Des: XRL Chk: WSD AFE: 11236	**UNION PACIFIC RAILROAD** IRVING, ILLINOIS PINE STREET PANA SUBDIVISION Office of Sr AVP Engineering - Signal/TCO Omaha, Nebraska	Sh.: 3A DOT 542159R MP: 227.28 ID: 030222728.3AX