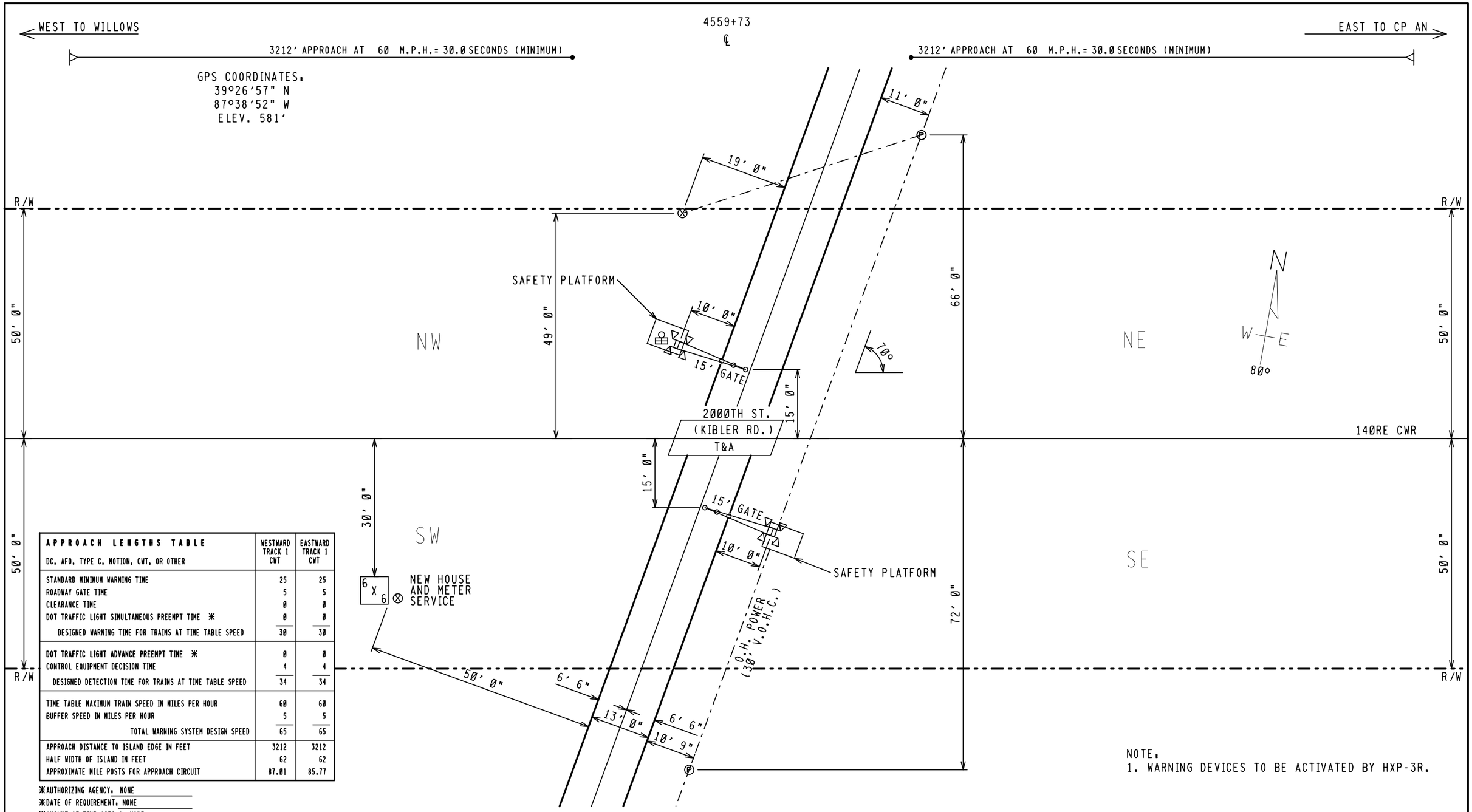

APPROACH LENGTHS TABLE DC, AFO, TYPE C, MOTION, CWT, OR OTHER	WESTWARD TRACK 1 CWT	EASTWARD TRACK 1 CWT
STANDARD MINIMUM WARNING TIME	25	25
ROADWAY GATE TIME	5	5
CLEARANCE TIME	0	0
DOT TRAFFIC LIGHT SIMULTANEOUS PREEMPT TIME ✳	0	0
DESIGNED WARNING TIME FOR TRAINS AT TIME TABLE SPEED	30	30
DOT TRAFFIC LIGHT ADVANCE PREEMPT TIME ✳	0	0
CONTROL EQUIPMENT DECISION TIME	4	4
DESIGNED DETECTION TIME FOR TRAINS AT TIME TABLE SPEED	34	34
TIME TABLE MAXIMUM TRAIN SPEED IN MILES PER HOUR	60	60
BUFFER SPEED IN MILES PER HOUR	5	5
TOTAL WARNING SYSTEM DESIGN SPEED	65	65
APPROACH DISTANCE TO ISLAND EDGE IN FEET	3212	3212
HALF WIDTH OF ISLAND IN FEET	62	62
APPROXIMATE MILE POSTS FOR APPROACH CIRCUIT	87.01	85.77

✳AUTHORIZING AGENCY: NONE
✳DATE OF REQUIREMENT: NONE
✳AMOUNT OF TIME (SEC.): NONE

NOTE:
1. WARNING DEVICES TO BE ACTIVATED BY HXP-3R.

FILE NAME: QS8639.H01	REVISION DATES	PRODUCED FOR:	PRODUCED BY:	LEGEND	GUARD RAIL	METER SERVICE ⊗	STREET NAME: 2000TH ST. (KIBLER RD.)
DATE DRAWN: 07/17/2012	08-02-12 DRB	CSX TRANSPORTATION	invensys Rail	CSX ROW	O.H. POWER	POLE Ⓟ	CITY & STATE: MARSHALL, IL
DRAWN BY: MILLER, ROBERT	- -	RAIL TRANSPORT GROUP ENGINEERING	7775 BAYMEADOWS WAY	R/R POLELINE	FENCE	FIRE PLUG Ⓕ	PROJECT #: IL2012029
CHECKED BY: WILTSIE, JOE	- -	COMMUNICATIONS AND SIGNALS	SUITE 250	GAS	WATER	SEWER CAP Ⓢ	OP #: IL0376
SSC #: JXXD03059	- -		JACKSONVILLE, FL 32256	FIBER OPTIC	SEWER	GAS VENT Ⓥ	DOT #: 546335A

PROPOSED CROSSING LAYOUT
1"=20'

REVISIONS

1 12-03-96

NEW PLAN DRAWN ACCOUNT
WARNING DEVICES ADDED AT
T.R. 302 (SNEDECKER ROAD)

CSX PROJECT NO. IL1999048
WO/AFE NO. 48746 CONRAIL NO. W48746
IN SERVICE. 01-07-00
PER. R.A. GOURLEY
REVISED. 03-01-00

VJR	ABC

2 10-22-99

SWE	SWE	SWE

PLAN REVISED ACCOUNT OF
TERRE HAUTE - REPLACE
MICROCODE WITH EC4.

CSX PROJ.NO. IN1999097
CSX OP/AFE NO. A24513
IN SERVICE. 06-14-00
PER. RAG
REVISED. 06-22-00

LMC	IRS

3 08-02-12

	IRC

PLAN REVISED ACCOUNT OF
INSTALLATION OF FLS & G
AT 2000TH ST. (KIBLER RD.)

CSX PROJ.NO. IL2012029
CSX OP/AFE NO. IL0376
IN SERVICE. XX-XX-XX
PER. RECORD COPY
REVISED.

DRB	IRC

INDEX

SH. NO.	CONTENTS	REVISION NO. 1	2	3	4	5	6	7
1	TITLE, NOTES, INDEX AND REVISIONS	✓	✓	⊘				
2	LOCATION PLAN	✓		⊘				
3	POWER DISTRIBUTION	✓						
4	3000D2 SAFETRAN GRADE CROSSING PREDICTOR CIRCUITS	✓						
5	GATE CONTROL, LIGHTING CIRCUITS AND CABLE TERMINATIONS	✓						
6	GATE MECHANISM TYPICALS	✓						
7	RELAY RACK AND CONNECTIONS - HOUSE LAYOUT	✓						
8	FRONT AND LEFT WALL LAYOUT	✓	✓					

NOTES

▭ = FOR MATERIAL REFERENCE SEE PLAN S-1002

⊗ = DENOTES TWISTED PAIR
GROUND IN ACCORDANCE WITH CS-9001-A

invensys Rail

PROJ #. IL2012029
DES BY. D.BAUMGARTNER
CHK BY. D. ALBRIGHT
DATE. 08-02-12

⊖⊖⊖ = IN

CSX TRANSPORTATION
RAIL TRANSPORT GROUP ENGINEERING
COMMUNICATIONS AND SIGNALS

STATE LINE TO ST. LOUIS
WABASH TWP., IL
INDEX AT
TR 302 (SNEDECKER RD.) 546334T M.P. QS85.80

DESIGNED	DIGITIZED	CHECKED	DATE

DRAWING	SHEET NO	NEXT SH	NEXT FILE	NEXT SH	FILE	SHEET
8406-0858	1	2	QS08580	S01	QS08580	I01

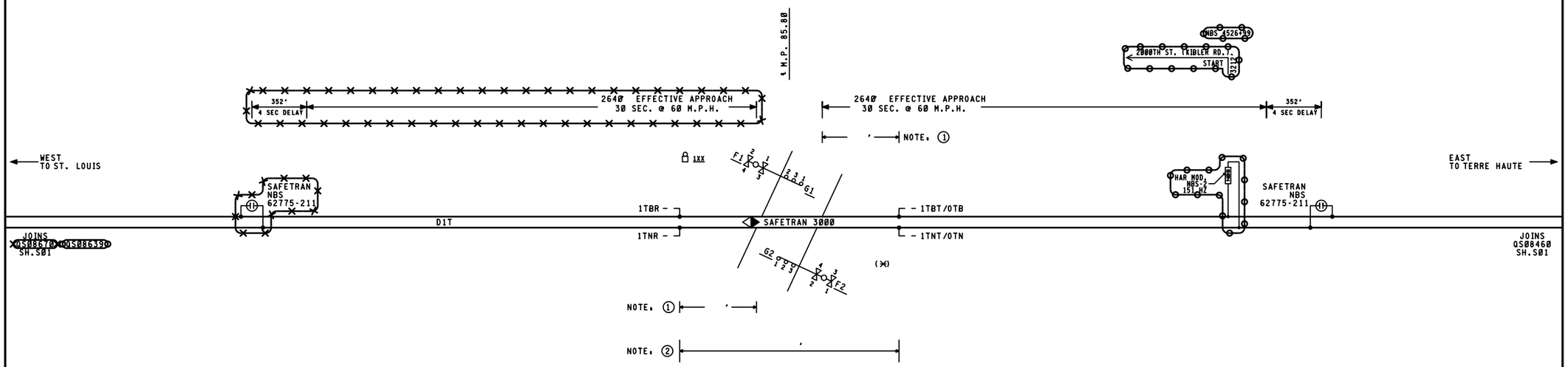

T.R. 302 (SNEDECKER ROAD)

WARNING DEVICES TO BE INSTALLED IN
ACCORDANCE WITH THE M.U.T.C.D.

AAR/DOT# 546334T

HIGH DOUBLE CASE CABLES

2 (2 COND. #6), TWISTED U.G. CABLES TO TRACKS.
2 (17 COND. 2#6, 8#9, 7#14), U.G. CABLES TO GATES/FLASHERS.
1 (3 COND. #9) U.G. CABLE TO METER SERVICE

NOTES.

① = 25' MINIMUM

② = 120' MINIMUM

③ EACH PAIR OF TRACK WIRES (TRANSMIT AND RECEIVE) SHOULD BE TWISTED AT LEAST TWO TURNS PER FOOT. THE TRANSMITTER PAIR SHOULD BE SEPARATED TO THE MAXIMUM EXTENT POSSIBLE FROM THE GCP RECEIVER PAIR BELOW GROUND AND IN INSTRUMENT HOUSING. TRANSMITTER WIRES MUST BE RUN TO THE NEAR SIDE OR BUNGALOW SIDE OF THE CROSSING.

(X) = LOCATION OF CASE

REVISIONS

03-01-00 ABC IL1999048

invensys Rail

PROJ #. IL2012029
DES BY. D.BAUMGARTNER
CHK BY. D. ALBRIGHT
DATE. 08-02-12

~~OOO~~ = IN
~~XXX~~ = OUT
///= SHOWN ELSEWHERE

The operation of any circuits and equipment shown herein must be checked by point to point breakdown and complete operational testing of the system (or sections of the system) into which they are connected.

CSX TRANSPORTATION
RAIL TRANSPORT GROUP ENGINEERING
COMMUNICATIONS AND SIGNALS

STATE LINE TO ST. LOUIS
WABASH TWP., IL
TRACK AND SIGNAL PLAN AT
TR 302 (SNEDECKER RD.) 546334T M.P. 0S85.80

DESIGNED	DIGITIZED	CHECKED	DATE

DRAWING	SHEET NO	NEXT SH	NEXT FILE	NEXT SH	FILE	SHEET
8406-0858	2	3	0S08580	E01	0S08580	S01

INDEX

CONTENTS

SH. NO.		REVISION NO. 1	2	3	4	5	6	7	8	9
I01	INDEX AND REVISIONS									
S01	TRACK AND SIGNAL PLAN									
E01	POWER DISTRIBUTION									
C01	CROSSING DETECTION CIRCUITRY									
C02	DETECTION DEVICE PROGRAM									
C03	CROSSING WARNING DEVICE CIRCUITRY									
C04	CROSSING WARNING DEVICE CIRCUITRY									
C05	RECORDER CIRCUITS									
C06	RECORDER PROGRAM									

= DESIGN COMPLETED

= REVISION COMPLETED

REVISIONS

REV. NO.	PROJECT NO.	DESIGN DATE	IN SERVICE DATE	REVISION DATE
1	IL2012029	08-02-12		

TO BE COMPLETED ON A.I.S.

NEW WORK

invensys Rail

PROJ #. IL2012029
DES BY. D.BAUMGARTNER
CHK BY. D. ALBRIGHT
DATE. 08-02-12

= NOTE

1TRKHXP3R.I01
REV. 02-17-06

CSX TRANSPORTATION
RAIL TRANSPORT GROUP ENGINEERING
COMMUNICATIONS AND SIGNALS

2000TH ST. (KIBLER RD.) 546335A

INDEX AND REVISIONS
MARSHALL, IL M.P. QS-86.39

DESIGNED	DIGITIZED	CHECKED	DATE
IRC/DRB	IRC/DRB	IRC/DBA	08-02-12

DESIGN DATE	REV. NO.	DRAWING	SHEET NO	FILE	SHEET
08-02-12	1	-----	-----	QS08639	I01

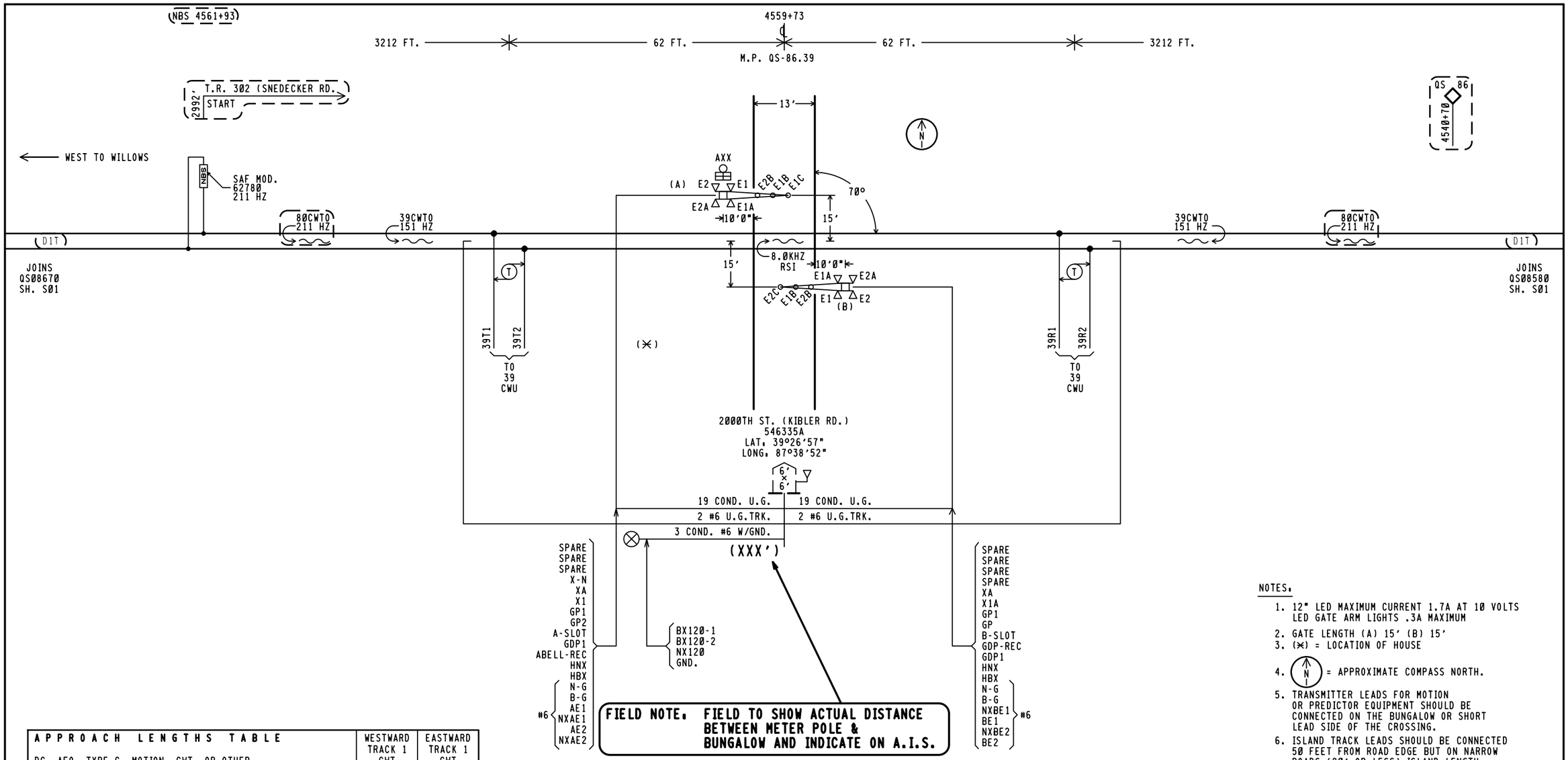

NOTES.

1. 12" LED MAXIMUM CURRENT 1.7A AT 10 VOLTS LED GATE ARM LIGHTS .3A MAXIMUM
2. GATE LENGTH (A) 15' (B) 15'
3. (✳) = LOCATION OF HOUSE
4. (N) = APPROXIMATE COMPASS NORTH.
5. TRANSMITTER LEADS FOR MOTION OR PREDICTOR EQUIPMENT SHOULD BE CONNECTED ON THE BUNGALOW OR SHORT LEAD SIDE OF THE CROSSING.
6. ISLAND TRACK LEADS SHOULD BE CONNECTED 50 FEET FROM ROAD EDGE BUT ON NARROW ROADS (20' OR LESS) ISLAND LENGTH SHALL BE 120 FEET.
7. WARNING SYSTEM APPROACH CIRCUIT DISTANCES ARE TO BE MEASURED FROM THE ISLAND TRACK CONNECTIONS.

APPROACH LENGTHS TABLE DC, AFO, TYPE C, MOTION, CWT, OR OTHER	WESTWARD TRACK 1 CWT	EASTWARD TRACK 1 CWT
STANDARD MINIMUM WARNING TIME IN SECONDS	25	25
ROADWAY GATE TIME IN SECONDS	5	5
CLEARANCE TIME IN SECONDS	0	0
DOT TRAFFIC LIGHT SIMULTANEOUS PREEMPT TIME IN SECONDS✳	0	0
DESIGNED WARNING TIME FOR TRAINS AT TIME TABLE SPEED	30 SEC.	30 SEC.
DOT TRAFFIC LIGHT ADVANCE PREEMPT TIME IN SECONDS ✳	0	0
CONTROL EQUIPMENT DECISION TIME IN SECONDS	4	4
DESIGNED DETECTION TIME FOR TRAINS AT TIME TABLE SPEED	34 SEC.	34 SEC.
TIME TABLE MAXIMUM TRAIN SPEED IN MILES PER HOUR	60	60
BUFFER SPEED IN MILES PER HOUR	5	5
TOTAL WARNING SYSTEM DESIGN SPEED IN MILES PER HOUR	65	65
APPROACH DISTANCE TO ISLAND EDGE IN FEET	3212	3212
HALF WIDTH OF ISLAND IN FEET	62	62
APPROXIMATE MILE POSTS FOR APPROACH CIRCUIT	87.01	85.77

✳AUTHORIZING AGENCY. NONE
✳DATE OF REQUIREMENT. NONE
✳AMOUNT OF TIME (SEC.). NONE

NEW WORK

invensys Rail

PROJ #. IL2012029
DES BY. D.BAUMGARTNER
CHK BY. D. ALBRIGHT
DATE. 08-02-12

(— —) = EXISTING

1TRKHXP3R.S01
REV. 02-17-06

CSX TRANSPORTATION
RAIL TRANSPORT GROUP ENGINEERING
COMMUNICATIONS AND SIGNALS

2000TH ST. (KIBLER RD.) 546335A

TRACK AND SIGNAL PLAN
MARSHALL, IL M.P. QS-86.39

DESIGNED	DIGITIZED	CHECKED	DATE
IRC/DRB	IRC/DRB	IRC/DBA	08-02-12

DESIGN DATE	REV. NO.	DRAWING	SHEET NO	FILE	SHEET
08-02-12	1	-----	-----	QS08639	S01

TOP ROW

XR			XPR			GPR			EOR			POR		
12	FB	B8	22	F	B36	12	B	B82	12	FB	B81	12	FB	B62
15	FB	C30	25	F	C30	15	B	C30	15	FB	C30	15	FB	C30
22						22			32	FB		22	FB	
23						25			35	FB		25	FB	
25	F					32	F					32	F	
32						35	B					35		
35														

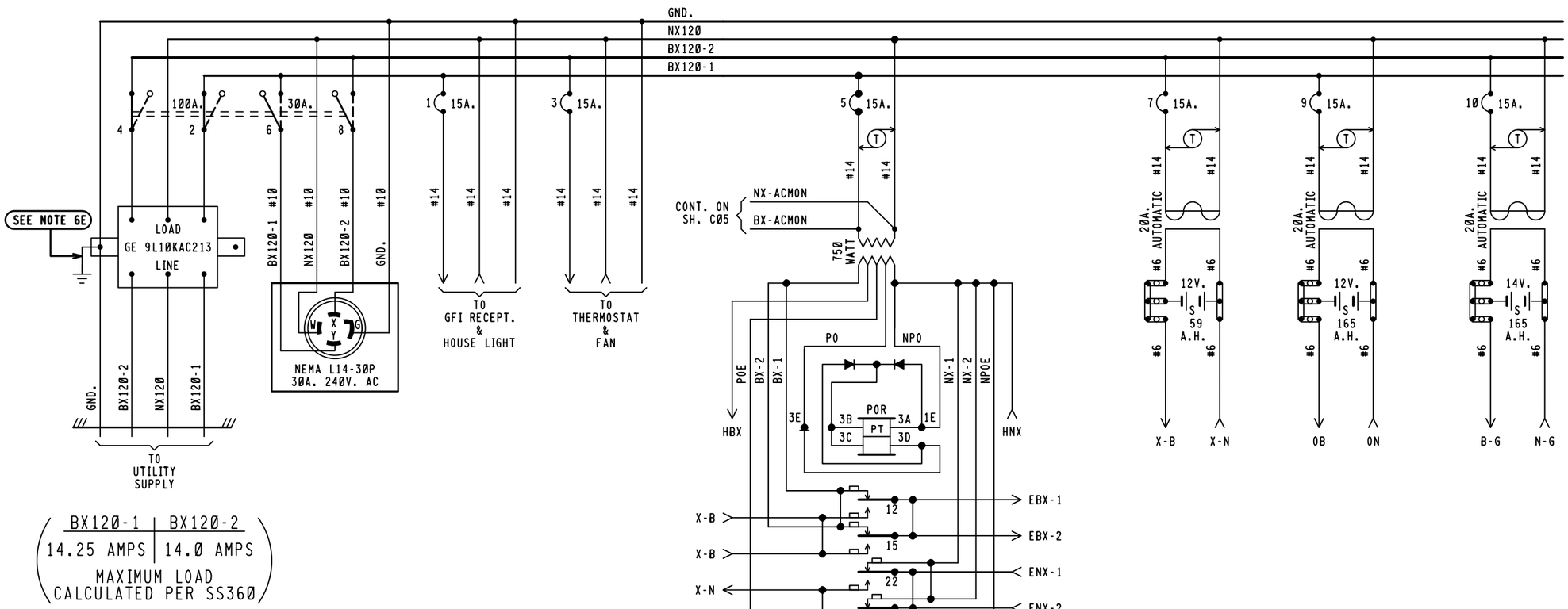

BX120-1	BX120-2
14.25 AMPS	14.0 AMPS

MAXIMUM LOAD
CALCULATED PER SS360

NOTES:

1 - REFERENCES ARE PER SCMS-13.
2 - ARRESTERS ARE PER SS382.
3 - SHELF RELAY PLACEMENT ON CONSIST CHART HAS NO SIGNIFICANCE.
4 - PLUG-IN RELAYS ARE VIEWED FROM THE FRONT OF RACK.
5 - BATTERY A.H. CAPACITY SHOWN IS THE MINIMUM REQUIREMENT.
6 - WIRING
  A - FEED TO ALL BUSSES, LIGHT CIRCUITS,MOTOR CIRCUITS TO BE #10 FLEX.
  B - 120-VOLT FEED FROM ENTRANCE TO POWER BUSS TO BE #10 FLEX.
  C - ALL TRACK WIRES TO BE #10 FLEX.
  D - ALL OTHERS TO BE #16 FLEX UNLESS NOTED.
  E - GROUND WIRE NOT NECESSARY WHEN GE ARRESTER IS MOUNTED ON GROUND PLANE OR METAL ENCLOSURE AFFIXED DIRECTLY TO BUNGALOW METALLIC STRUCTURAL MEMBER.
7 - CIRCUIT INTERRUPTERS 2 & 4 ARE MECHANICALLY INTERLOCKED WITH CIRCUIT INTERRUPTERS 6 & 8.

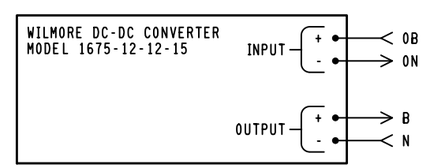

NEW WORK

invensys Rail

PROJ #: IL2012029
DES BY: D.BAUMGARTNER
CHK BY: D. ALBRIGHT
DATE: 08-02-12

= NOTE

1TRKHXP3R.E01
REV. 08-29-08

6'X 6' RELAY HOUSE W/FARADAY SHIELD

CSX TRANSPORTATION
RAIL TRANSPORT GROUP ENGINEERING
COMMUNICATIONS AND SIGNALS

2000TH ST. (KIBLER RD.) **546335A**

POWER DISTRIBUTION
MARSHALL, IL M.P. QS-86.39

DESIGNED	DIGITIZED	CHECKED	DATE
IRC/DRB	IRC/DRB	IRC/DBA	08-02-12

DESIGN DATE	REV. NO.	DRAWING	SHEET NO	FILE	SHEET
08-02-12	1	-----	-----	QS08639	E01

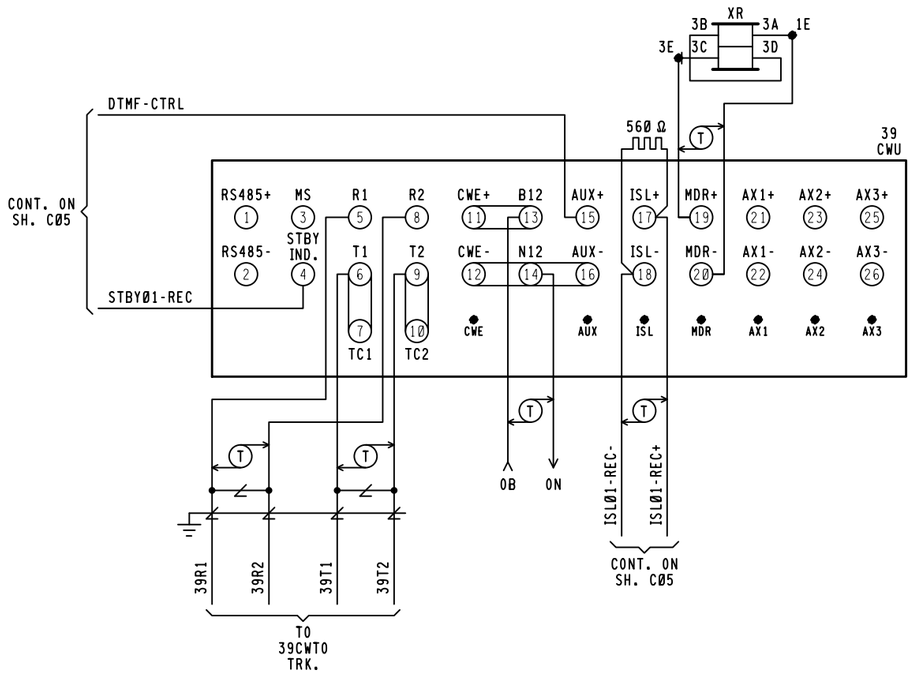

39CWU
HXP-3R MODULES REQUIRED

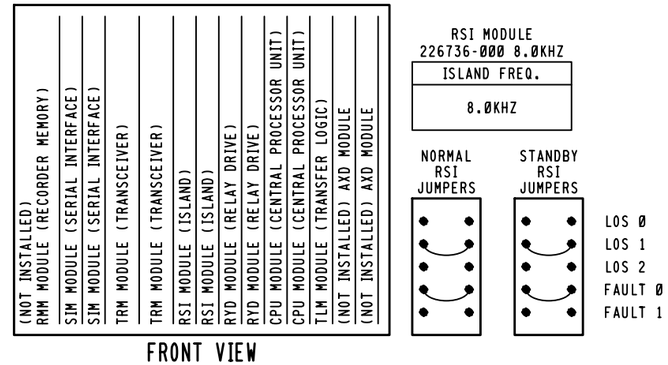

RSI MODULE
226736-000 8.0KHZ

ISLAND FREQ.
8.0KHZ

39
CWU

CABINET SWITCHES
THESE SWITCHES ARE LOCATED ON MOTHERBOARD
MASTER/SLAVE MASTER — SLAVE S1

SYSTEM CONFIGURATION				
S6 & S7 DIP SWITCH POSITIONS				
SWITCH	1	2	3	4
SWITCH POSITION	ON	OFF	OFF	OFF
APPROACH.	NORMAL		(NOT USED)	

	FREQUENCY SELECT					
NORMAL	S2 & S3 DIP SWITCH POSITIONS 151 HZ					
	SWITCH	1	2	3	4	5
	SWITCH POSITION	ON	ON	OFF	OFF	OFF
STANDBY	S4 & S5 DIP SWITCH POSITIONS 151 HZ					
	SWITCH	1	2	3	4	5
	SWITCH POSITION	ON	ON	OFF	OFF	OFF

TLM MODULE
JUMPERS AND SWITCHES

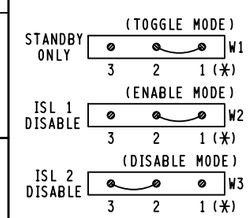

NOTE.
PIN 1 IS IDENTIFIED BY ASTERICK BELOW IT.
(☆) = MAY BE SET PER FIELD CONDITIONS.

MINUTE TIMEOUT SWITCH

SETTING	(☆) 9 MINUTES	S1

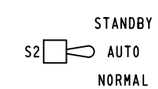

NEW WORK

invensys Rail

PROJ #. IL2012029
DES BY. D.BAUMGARTNER
CHK BY. D. ALBRIGHT
DATE. 08-02-12

CSX TRANSPORTATION
RAIL TRANSPORT GROUP ENGINEERING
COMMUNICATIONS AND SIGNALS

2000TH ST. (KIBLER RD.) 546335A

CROSSING DETECTION CIRCUITRY
MARSHALL, IL M.P. QS-86.39

1TRKHXP3R.C01
REV. 08-31-09

DESIGNED	DIGITIZED	CHECKED	DATE
IRC/DRB	IRC/DRB	IRC/DBA	08-02-12

DESIGN DATE	REV. NO.	DRAWING	SHEET NO	FILE	SHEET
08-02-12	1	-----	-----	QS08639	C01

39CWU

HXP-3R APPLICATION DESIGN CARD

OPTION 90 (CABINET #)	CABINET #

PASSWORD(_ _✳_ _)(SEE MANUAL 100052-001 AA0 1-27	TRACK 1	TRACK 2	DEFAULT
APPROACH LENGTH ADJUSTMENT	3212'	N/A	9,999 FT.
WARNING TIME ADJUSTMENT	30 SEC.	N/A	99 SEC.
LUMPED IMPEDANCE ADJUSTMENT (LIA)	✳	N/A	0
TRANSMITTER CHECK ADJUSTMENT (TC)	✳	N/A	0
MOTION DETECT RESTART (MD RESTART)	0 ☆	N/A	99%
OPTION 1 TRACK ENABLE (TK-ENA)	UP	N/A	UP (ALWAYS ENABLED)
OPTION 2 TRACK FREQUENCY (TK F0)	STRAP ◇	N/A	0 HZ
OPTION 3 CONSTANT WARNING/MOTION (CW/MD)	C	N/A	d (Motion)
OPTION 4 UNI/BIDIRECTIONAL (UNI-BI)	b	N/A	b (bi)
OPTION 5 NARROW BAND COMPENSATION (NBS-C)	⊗	N/A	9,999 FT.
OPTION 6 CWE WARNING TIME (CWEWT)	80 SEC.	N/A	80 SEC.
OPTION 7 LOSS OF SHUNT TIME (LOS)	16 SEC.	N/A	16 SEC.
OPTION 8 LOS W/JOINTS NEAR ISLAND (IJ-LOS)	5 SEC. ✳✳	N/A	5 SEC.
OPTION 9 BALLAST COMPENSATION (BC)	✳	N/A	FREQUENCY DEPENDANT ◎
OPTION 10 PHASE COMPENSATION ADJUSTMENT (P-COMP)	~~✳✳✳~~	N/A	0°

	AX OPTIONS △	OPTION 11 AX DRIVE #1	OPTION 12 AX DRIVE #2	OPTION 13 AX DRIVE #3	DEFAULT
ITEM 1	TRACK ASSIGNMENT (TK-ASN)	N/A	N/A	N/A	1
ITEM 2	OFFSET DISTANCE TRACK 1 (OF-TK1)	0000'	0000'	0000'	0 FT.
ITEM 3	OFFSET DISTANCE TRACK 2 (OF-TK2)	N/A	N/A	N/A	N/A
ITEM 4	WARNING TIME (WT)	99 SEC.	99 SEC.	99 SEC.	99 SEC.
ITEM 5	MOTION DETECT RESTART (MD-RST)	99 %	99 %	99 %	99 %
ITEM 6	CONSTANT WARNING/MOTION (CW/MD)	d	d	d	d (Motion)
ITEM 7	CLEAR JOINTS LOS (CJ-LOS)	00 SEC.	00 SEC.	00 SEC.	0 SEC.
ITEM 8	POST JOINT DETECTION (PJ-DET)	15 SEC.	15 SEC.	15 SEC.	15 SEC.
ITEM 9	POST JOINT RX (PJ-RX)	15	15	15	15
ITEM 10	POSITIVE START	dn	dn	dn	dn
OPTION 17 MDR DRIVE OR AX RELAY DRIVE SELECTION (MDR-AX)			◎	N/A	dn (STATUS ONLY) ◎

	OPTION 17 SUB-MENU	TRACK 1	TRACK 2	DEFAULT
ITEM 1	MDR-AX OFFSET DISTANCE TRK. 1(OF-TK1) & TRK. 2(OF-TK2)	0000'	N/A	0 FT.= CONFIGURED AS MDR
ITEM 2	MDR-AX CLEAR JOINT LOS TIME (CJ-LOS)	00 SEC.	N/A	0 SEC.
ITEM 3	MDR-AX POST JOINT DETECTION TIME (PJ-DET)	15 SEC.	N/A	15 SEC.
ITEM 4	POST JOINT RX (PJ-RX)	15	N/A	15 (0 = DISABLE)
OPTION 18 MOTION DETECTOR TIMER (MD-TMR)		10 MIN.	N/A	10 MIN. (0 = DISABLE)
OPTION 19 MINIMUM WARNING TIME WITH ADVANCED PREEMPTION (MIN-WT)		00 SEC.	N/A	00 SEC. (0 = DISABLE)
	OPTION 20 FALSE SHUNT TIMER ADJUSTMENT (FS-TMR)			
ITEM 1	FALSE SHUNT RX (FS-RX)	0	N/A	0, 0 = DISABLE
ITEM 2	FALSE SHUNT TIMER ADJUSTMENT (FS-TM)	10	N/A	10
	OPTION 21 POSITIVE START RX & TIMER ADJUSTMENT (POS-ST)			
ITEM 1	POSITIVE START RX (POS-RX)	0	N/A	0, 0 = DISABLE
ITEM 2	POSITIVE START TIMER (POS-TM)	10	N/A	10
	OPTION 22 APPROACH RELEASE RX (AR-TM)			
ITEM 1	APPROACH RELEASE RX (AR-RX)	0	N/A	0, 0 = DISABLE
ITEM 2	APPROACH RELEASE TIMER (AR-TM)	10	N/A	10
OPTION 47 AUTO RX ADJUSTMENT (ATO-RX)		dn	N/A	dn = DISABLE
OPTION 48 PREDICTIVE FILTER ENABLE/DISABLE (PF-ENA)		dn	N/A	dn = DISABLE
OPTION 49 RESET LOCAL PARAMETERS TO DEFAULT SETTINGS (RESET)				PAGE 3-14 & 3-41
OPTION 50 RECORDER PRINTER CONTROL (PRNTR)			✧	PAGE 1-47 & 3-41
OPTION 51 CLOCK ADJUSTMENT (CLOCK)			✧	PAGE 3-32
	OPTION 70 LOCAL SERIAL I/O PORT ADJUSTMENT (LSP)			
ITEM 1	BAUD RATE	38.4	✧	PAGE 1-47 & 3-42
ITEM 2	DBITS (DATA BITS)	8	✧	PAGE 1-47 & 3-42
ITEM 3	PA (PARITY)	NO(-=NO PARITY)	✧	PAGE 1-47 & 3-42
OPTION 90 CABINET NUMBER DISPLAY (CAB)		✳		PAGE 1-47 & 3-41
OPTION 91 HXP-3 OPERATING PROGRAM VERSION NUMBER (VERS)		✳		VERSION 35.0
OPTION 99 RESET PASSWORD TIMER (TIMER)			✧	PAGE 3-30

NOTE:

✳ = ENTRY TO BE DONE ON AS-IN-SERVICE.

☆ = NORMALLY SET AT "0" SEE MANUAL 100052-001 AA0 PG. 1-46 & 3-41.

◇ = THE WORD STRAP IS DISPLAYED WHEN FREQUENCY SELECT DIP SWITCHES USED TO SELECT A STANDARD FREQUENCY.

⊗ = ADJUSTMENT NECESSARY ONLY WHEN AX RELAY DRIVE MODULE USED.

✳✳ = ADJUSTMENT NECESSARY IF INSULATED JOINTS ARE LOCATED NEAR ISLAND CIRCUIT.

~~✳✳✳~~ = ADJUSTMENT NECESSARY ONLY IF VERY POOR BALLAST CONDITIONS NEED TO BE COMPENSATED.

◎ = OPTION 17 SUB-MENU USED ONLY WHEN AX RELAY DRIVE OPERATION IS SELECTED. ENTERING AN OFFSET DISTANCE VALUE OTHER THAN ZERO ASSIGNS A MDR AS AN AX DRIVE.

△ 1. WHEN AXD MODULES ARE NOT INSTALLED, THEIR ASSOCIATED OPTIONS AND ADJUSTMENTS ARE NOT DISPLAYED.
2. PROGRAM UNUSED AX OPTION(S) SAME AS OPTION 11. IF AX OPTION 12 OR 13 IS USED IN FUTURE THEN REPROGRAM AS APPLICABLE.

◎ = FREQUENCY DEPENDANT, RANGE BETWEEN 50-250 TO BE SUPPLIED ON AS-IN-SERVICE.

✧ = OPTIONS 50-99 ARE NON-VITAL AND NOT REQUIRED FOR INITIAL SETUP. SEE MANUAL 100052-001 AA0. FOR OPTIONS 49 TO 99 SEE PAGES AS LISTED IN DEFAULT COLUMN.

✧ = SET CORRECT LOCAL TIME AND DATE. TIME OF DAY SHOULD BE SYNCRONIZED WITH TIME SHOWN BY EXTERNAL EVENT RECORDER.

NEW WORK

invensys Rail

PROJ #: IL2012029
DES BY: D.BAUMGARTNER
CHK BY: D. ALBRIGHT
DATE: 08-02-12

CSX TRANSPORTATION
RAIL TRANSPORT GROUP ENGINEERING
COMMUNICATIONS AND SIGNALS

2000TH ST. (KIBLER RD.) 546335A

DETECTION DEVICE PROGRAM
MARSHALL, IL M.P. QS-86.39

1TRKHXP3R.C02
REV. 10-31-07

DESIGNED	DIGITIZED	CHECKED	DATE
IRC/DRB	IRC/DRB	IRC/DBA	08-02-12

DESIGN DATE	REV. NO.	DRAWING	SHEET NO	FILE	SHEET
08-02-12	1	-----	-----	QS08639	C02

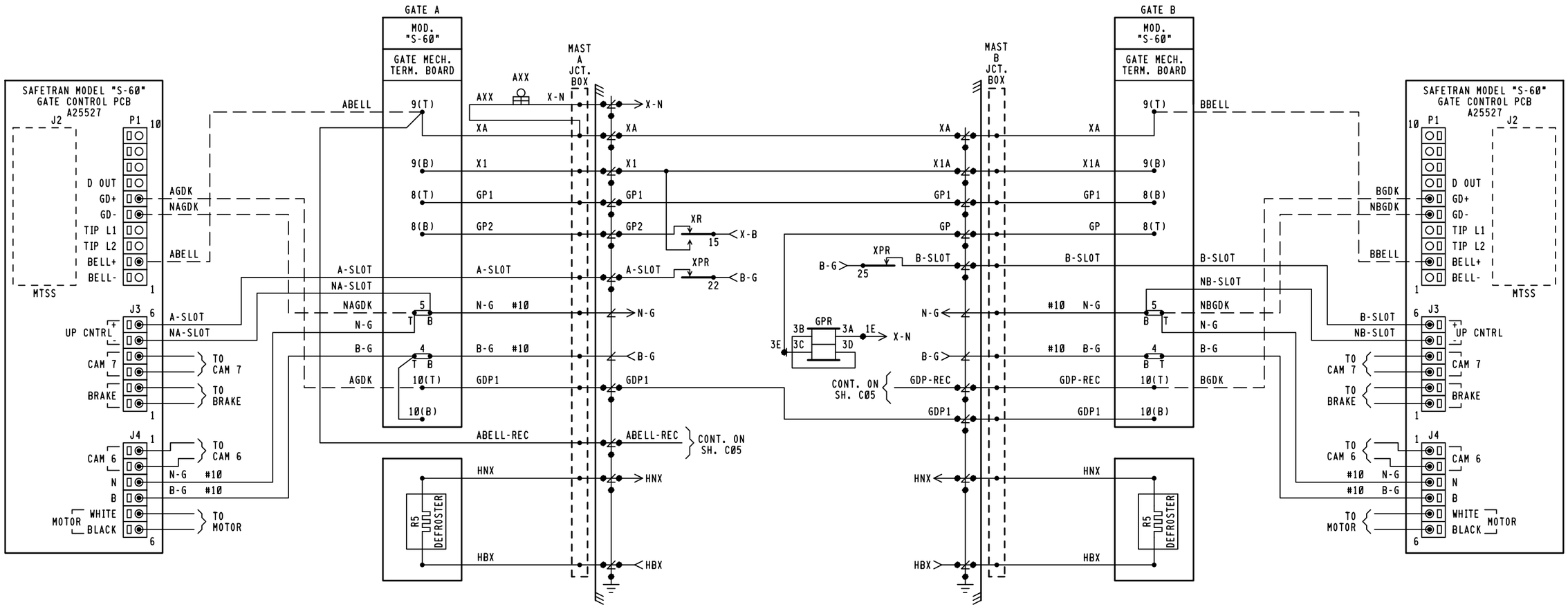

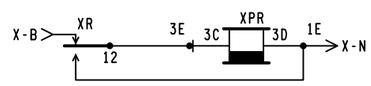

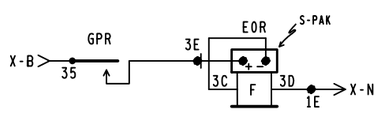

NEW WORK

invensys Rail

PROJ #: IL2012029
DES BY: D.BAUMGARTNER
CHK BY: D. ALBRIGHT
DATE: 08-02-12

1TRKHXP3R.C03A
REV: 03-22-12

CSX TRANSPORTATION
RAIL TRANSPORT GROUP ENGINEERING
COMMUNICATIONS AND SIGNALS

2000TH ST. (KIBLER RD.) 546335A

CROSSING WARNING DEVICE GATE CIRCUITRY
MARSHALL, IL M.P. QS-86.39

DESIGNED	DIGITIZED	CHECKED	DATE
IRC/DRB	IRC/DRB	IRC/DBA	08-02-12

DESIGN DATE	REV. NO.	DRAWING	SHEET NO	FILE	SHEET
08-02-12	1	-----	-----	QS08639	C03

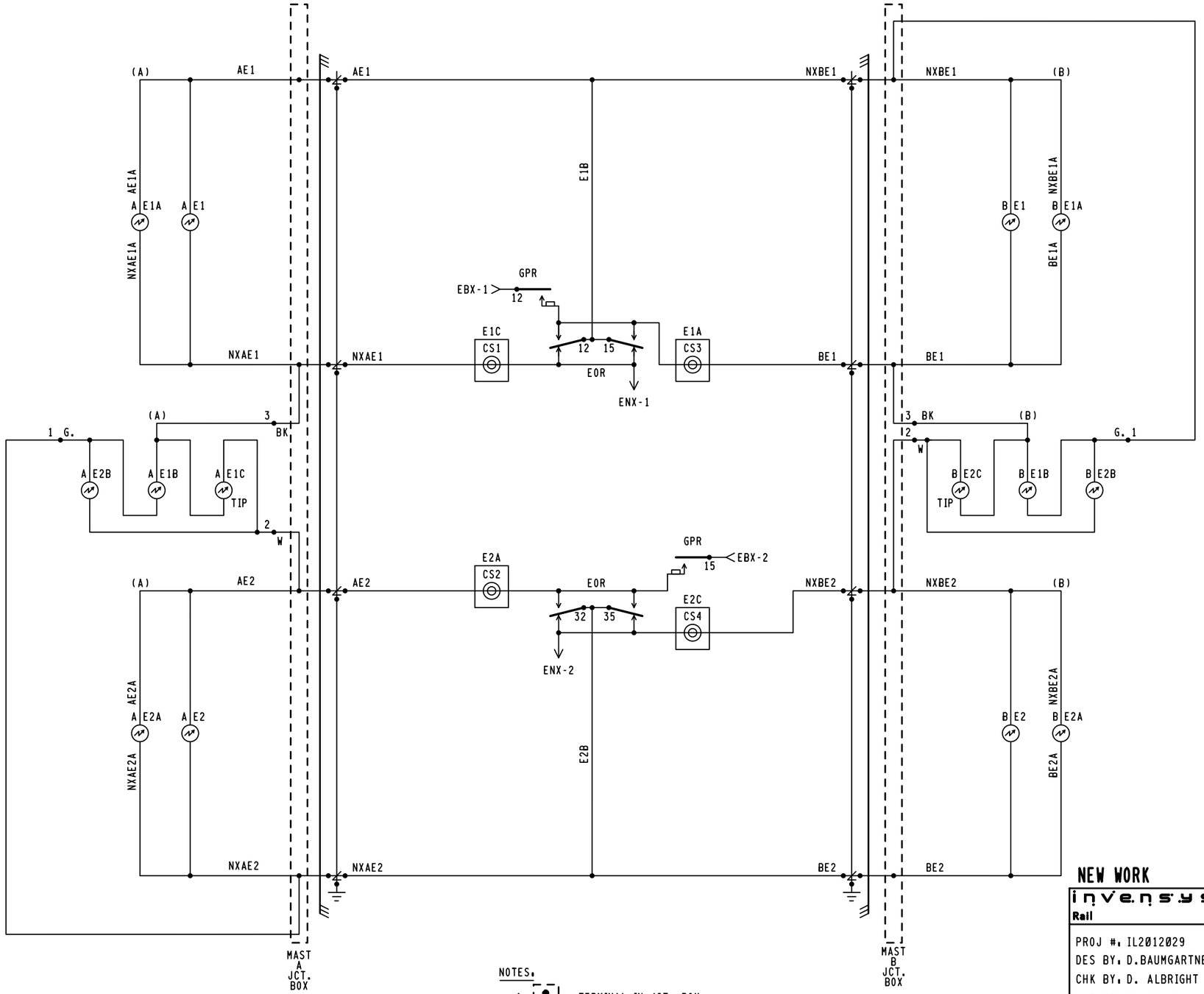

NOTES:

1. = TERMINAL IN JCT. BOX
2. WHEN 7 OR MORE LIGHTS ON A SINGLE STRUCTURE REFER TO SS-382 FOR REQUIRED ARRESTER RATING.

NEW WORK

invensys Rail

PROJ #: IL2012029
DES BY: D.BAUMGARTNER
CHK BY: D. ALBRIGHT
DATE: 08-02-12

CSX TRANSPORTATION
RAIL TRANSPORT GROUP ENGINEERING
COMMUNICATIONS AND SIGNALS

2000TH ST. (KIBLER RD.) 546335A

CROSSING WARNING DEVICE CIRCUITRY
MARSHALL, IL M.P. QS-86.39

1TRKHXP3R.C04
REV. 04-30-04

DESIGNED	DIGITIZED	CHECKED	DATE
IRC/DRB	IRC/DRB	IRC/DBA	08-02-12

DESIGN DATE	REV. NO.	DRAWING	SHEET NO	FILE	SHEET
08-02-12	1	-----	-----	QS08639	C04

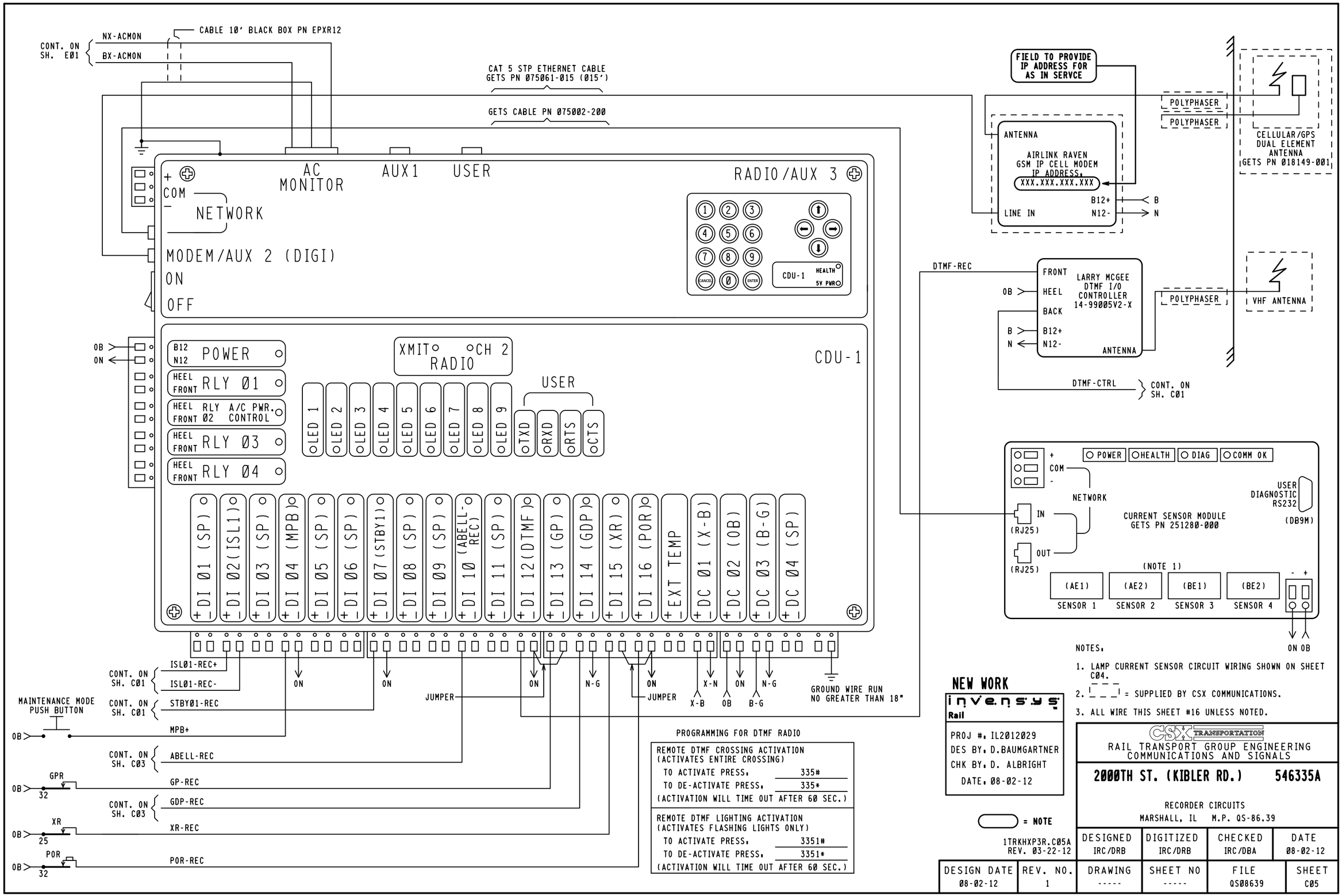

PROGRAMMING FOR DTMF RADIO

REMOTE DTMF CROSSING ACTIVATION (ACTIVATES ENTIRE CROSSING)	
TO ACTIVATE PRESS.	335#
TO DE-ACTIVATE PRESS.	335*
(ACTIVATION WILL TIME OUT AFTER 60 SEC.)	
REMOTE DTMF LIGHTING ACTIVATION (ACTIVATES FLASHING LIGHTS ONLY)	
TO ACTIVATE PRESS.	3351#
TO DE-ACTIVATE PRESS.	3351*
(ACTIVATION WILL TIME OUT AFTER 60 SEC.)	

NOTES.

1. LAMP CURRENT SENSOR CIRCUIT WIRING SHOWN ON SHEET C04.
2. _ _ _ _ = SUPPLIED BY CSX COMMUNICATIONS.
3. ALL WIRE THIS SHEET #16 UNLESS NOTED.

NEW WORK

invensys Rail

PROJ #. IL2012029
DES BY. D.BAUMGARTNER
CHK BY. D. ALBRIGHT
DATE. 08-02-12

= NOTE

1TRKHXP3R.C05A
REV. 03-22-12

CSX TRANSPORTATION
RAIL TRANSPORT GROUP ENGINEERING
COMMUNICATIONS AND SIGNALS

2000TH ST. (KIBLER RD.) 546335A

RECORDER CIRCUITS
MARSHALL, IL M.P. QS-86.39

DESIGNED	DIGITIZED	CHECKED	DATE
IRC/DRB	IRC/DRB	IRC/DBA	08-02-12

DESIGN DATE	REV. NO.	DRAWING	SHEET NO	FILE	SHEET
08-02-12	1	-----	-----	QS08639	C05

	DEFAULTS AND/OR STYLE	FIELD RECORD
HAWK EXECUTIVE PROGRAM	VERSION 2.7, COMPILED ON NOV. 11, 2003	VERSION ____, COMPILED ON _____ (FIELD TO ENTER)
CSXT USER PROGRAM (IF LOADED)	VERSION 1.01, COMPILED ON 12-01-03 (MM-DD-YY)	VERSION _____, COMPILED ON _____ (FIELD TO ENTER)
SYSTEM SETTINGS		
DATE & TIME (ENABLE DAYLIGHT SAVINGS TIME = Y (YES)	MM-DD-YY 23:01:59	n/a
MILE POST	XYZ-789.01	QS-86.39
SITE NAME	MAIN ST (SR-17,US-1)	2000TH ST. (KIBLER RD.)
DOT NUMBER	123456A	546335A

NOTE TO INSPECTOR, AT IN SERVICE OF HAWK OR UPDATE OF ITS INTERNAL EXECUTIVE PROGRAM OR ITS CSXT USER PROGRAM, THE VERSION NUMBER AND COMPILE DATES OF EACH PROGRAM MUST BE INSERTED IN THE BLANK FIELDS.

BATTERY INPUTS	DC 01	DC 02	DC 03	DC 04
CHANNEL	1	2	3	4
BATTERY CHANNEL NAMES	X-B BULB BATTERY	OB ELECTRONIC BATTERY	B-G GATE BATTERY	SPARE
BATTERY CHANNEL I.D.	X-B	OB	B-G	SP
SAMPLE PERIOD	500 ms	500 ms	500 ms	10,000 ms
RESOLUTION	00.2 V	00.2 V	01.0 V	02.0 V

DIGITAL INPUTS	DI 01	DI 02	DI 03	DI 04	DI 05
CHANNEL	1	2	3	4	5
NAME		ISLAND TRACK 1		MAINTENANCE PB	
ID	SP	ISL1	SP	MPB	SP
ON NAME		ISL1 UP		MAINTENANCE PB HI	
OFF NAME		ISL1 DN		MAINTENANCE PB LOW	
ON DEBOUNCE TIME	1000 ms	100 ms	1000 ms	100 ms	1000 ms
OFF DEBOUNCE TIME	1000 ms	100 ms	1000 ms	100 ms	1000 ms
TOGGLE PERIOD	500 ms	500 ms	500 ms	500 ms	500 ms

DIGITAL INPUTS	DI 06	DI 07	DI 08	DI 09	DI 10
CHANNEL	6	7	8	9	10
NAME		STANDBY1			ABELL REC
ID	SP	STBY1	SP	SP	ABELL-REC
ON NAME		STANDBY UNIT			BELL RINGING
OFF NAME		PRIMARY UNIT			BELL NOT RINGING
ON DEBOUNCE TIME	1000 ms	100 ms	1000 ms	1000 ms	100 ms
OFF DEBOUNCE TIME	1000 ms	100 ms	1000 ms	1000 ms	100 ms
TOGGLE PERIOD	500 ms	500 ms	500 ms	500 ms	500 ms

DIGITAL INPUTS	DI 11	DI 12	DI 13	DI 14	DI 15	DI 16
CHANNEL	11	12	13	14	15	16
NAME		DTMF TEST	GPR	GDP	XR	POR
ID	SP	DTMF	GPR	GDP	XR	POR
ON NAME		DTMF TEST ON	GATE VERTICAL	GATE HORIZ	XR UP	POR UP
OFF NAME		DTMF TEST OFF	LIGHTS FLASH	NOT HORIZ	XR DN	POR DN
ON DEBOUNCE TIME	1000 ms	100 ms	100 ms	100 ms	100 ms	100 ms
OFF DEBOUNCE TIME	1000 ms	100 ms	100 ms	100 ms	100 ms	100 ms
TOGGLE PERIOD	500 ms	500 ms	500 ms	500 ms	500 ms	500 ms

MODULE-DIGITAL 4 QUAD CURRENT SENSOR SERIAL NUMBER: [_____] (BLANK UNTIL AIS RECEIVED)				
RESOLUTION (AMPS RMS) : [00.2] ARMS				
AUTOMATICALLY ALLOCATED DIGITAL INPUT	DI 17	DI 18	D1 19	D1 20
DIGITAL 4 QUAD CURRENT SENSOR	1	2	3	4
NAME	E1C	E2A	E1A	E2C
ID	E1C	E2A	E1A	E2C
LIT BULB COUNT ON EACH CIRCUIT	4	4	4	4
CURRENT READING IN AMPS AT APPROXIMATE 10.0 VOLTS BULB VOLTAGE	2.6	2.6	2.6	2.6

CHANNEL	1	2	3	4
NAME	RELAY OUTPUT 01	RELAY OUTPUT 02	RELAY OUTPUT 03	RELAY OUTPUT 04
I.D.	RLY01	RLY02	RLY03	RLY04
ON NAME	ON	ON	ON	ON
OFF NAME	OFF	OFF	OFF	OFF
PULSE DURATION	1000 ms	1000 ms	1000 ms	1000 ms

PORT	USER	AUX 1	MODEM/AUX 2
BAUD RATE	38400	9600	9600
PARITY	N	N	N
DATA BITS	8	8	8
STOP BITS	1	1	1
FLOW CONTROL	NONE	NONE	NONE

NEW WORK

invensys Rail

PROJ #: IL2012029
DES BY: D.BAUMGARTNER
CHK BY: D. ALBRIGHT
DATE: 08-02-12

= NOTE

1TRKHXP3R.C06
REV. 04-30-04

CSX TRANSPORTATION
RAIL TRANSPORT GROUP ENGINEERING
COMMUNICATIONS AND SIGNALS

2000TH ST. (KIBLER RD.) 546335A

RECORDER PROGRAM
MARSHALL, IL M.P. QS-86.39

DESIGNED	DIGITIZED	CHECKED	DATE
IRC/DRB	IRC/DRB	IRC/DBA	08-02-12

DESIGN DATE	REV. NO.	DRAWING	SHEET NO	FILE	SHEET
08-02-12	1	-----	-----	QS08639	C06

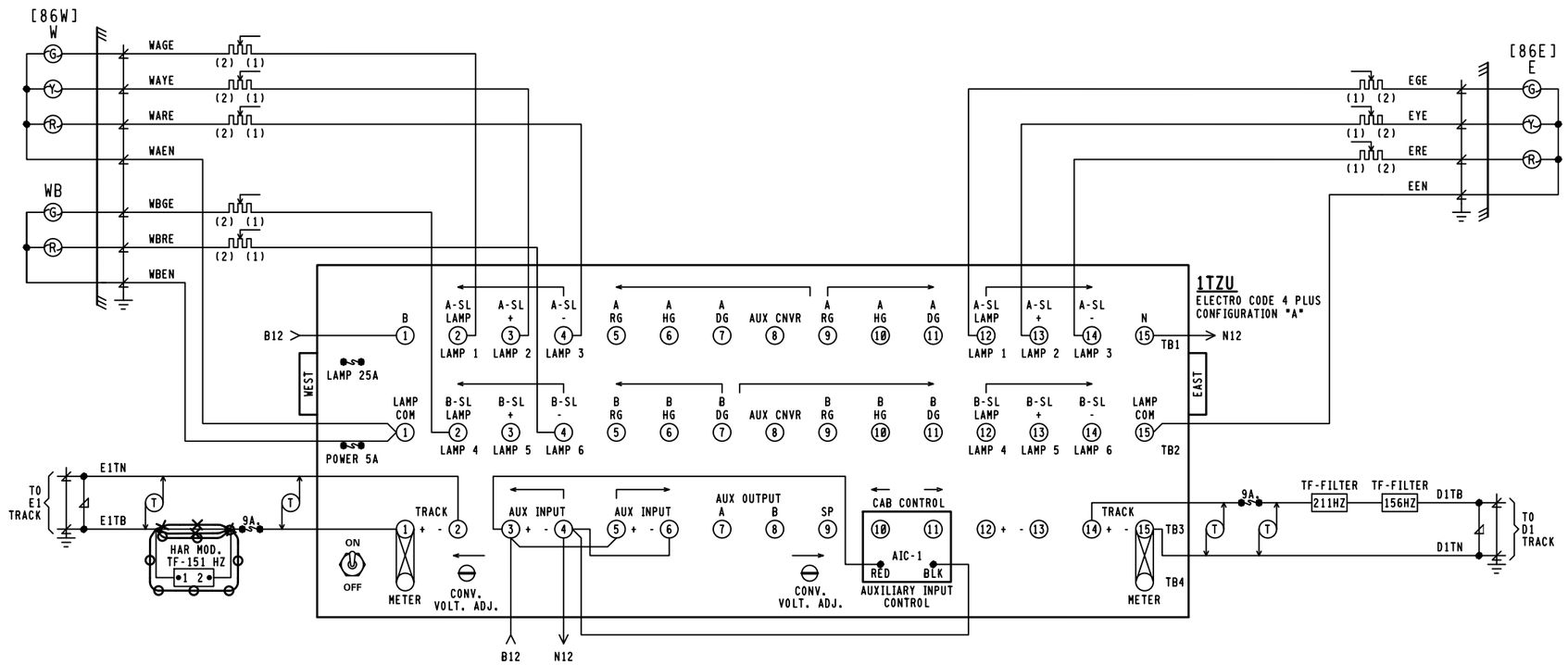

230 MICROPROCESSOR MODULE

JP1	210A/220	●	210B/230
JP2	210	●	220/230
JP3	U12-256	●	U12-64
JP4	220/230	●	210 (16K)
JP5	220/230	●	210 (32K)

INSTALL JUMPER TO DETERMINE PROPER CONFIGURATION.

SHUNT 1

CHASSIS
I.D. 35678

EXE NAME _____ REV. _____
CS U2 $ 7A0E CS U4 $ C994
APP NAME CRTQ REV. _____
CS U1 & U3 $ E971

216B MODULE

215A/B/D JP1 215SC

215D MODULE

S1

C1 OR C5 IN → C5 OUT
C5 IN → C5 OUT
C5 OUT ← C1 OR C5 IN
C5 OUT ← C5 IN

OPEN

JUMPER A B C D

CODE 5 SELECT SWITCHES

invensys Rail

PROJ #: IL2012029
DES BY: D.BAUMGARTNER
CHK BY: D. ALBRIGHT
DATE: 08-02-12

NOTE:

~~OOO~~ = IN
~~XXX~~ = OUT

1. SIGNAL LIGHT RESISTORS ARE 3 OHM VARIABLE, 15 WATT.

REVISIONS
06-22-00 IRS IN1999097
06-01-01 IRS IN1999097

CSX TRANSPORTATION
RAIL TRANSPORT GROUP ENGINEERING
COMMUNICATIONS AND SIGNALS

CP IU TO CP 99

CIRCUITS AT
AUTO SIGNAL 86E & 86W, MP.QS-86.70

DESIGNED	DIGITIZED	CHECKED	DATE
SWE	SWE	SWE	10-22-99

DRAWING	SHEET NO	NEXT SH	NEXT FILE	NEXT SH	FILE	SHEET
8406-0867	3		QS08580	I01	QS08670	C01

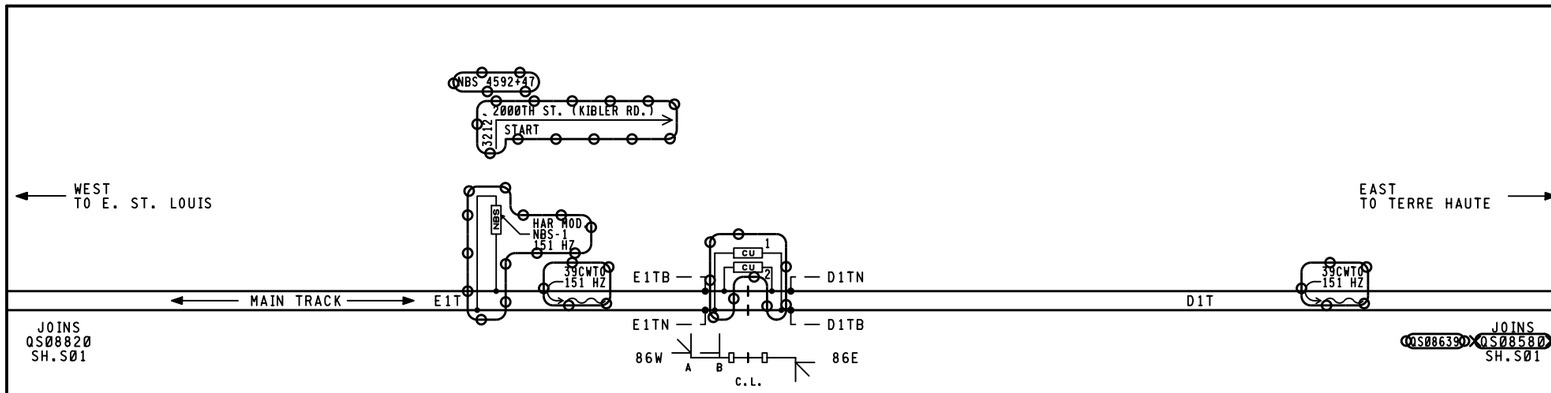

NOTES

▭ = FOR MATERIAL REFERENCE SEE PLAN S-1002

⊗ = DENOTES TWISTED PAIR

GROUND IN ACCORDANCE WITH CS-9001-A

CU 1&2 ARE HAR. MOD. TJC-1A, 151HZ TJC-S

REVISIONS

1	02-04-86		DDD	MAW
2	12-03-96	DMR / SXJ		HII
3	10-22-99	SWE	SWE	SWE
4	08-02-12		DRB	IRC

1 — TCS TERRE HAUTE TO EAST ST.LOUIS

SYSTEM FILE NO.
WO/AFE NO.JW 347 PFC NO.2
IN SERVICE. 08-25-87
PER. JED

2 — NEW PLAN DRAWN ACCOUNT WARNING DEVICES ADDED AT T.R. 302 (SNEDECKER ROAD)

CSX PROJECT NO. IL1999048
WO/AFE NO. 48746 CONRAIL NO. W48746
IN SERVICE. 11-23-99
PER. R.A. GOURLEY
REVISED. 03-01-00

3 — PLAN REVISED ACCOUNT OF TERRE HAUTE - REPLACE MICROCODE WITH EC4.

CSX PROJ.NO. IN1999097
CSX OP/AFE NO. A24513
IN SERVICE. 06-14-00
PER. RAG
REVISED. 06-22-00

4 — PLAN REVISED ACCOUNT OF INSTALLATION OF FLS & G AT 2000TH ST. (KIBLER RD.)

CSX PROJ.NO. IL2012029
CSX OP/AFE NO. IL0376
IN SERVICE. XX-XX-XX
PER. RECORD COPY
REVISED.

invensys Rail

PROJ #. IL2012029
DES BY. D.BAUMGARTNER
CHK BY. D. ALBRIGHT
DATE. 08-02-12

~~OOO~~ = IN
~~XXX~~ = OUT

CSX TRANSPORTATION
RAIL TRANSPORT GROUP ENGINEERING
COMMUNICATIONS AND SIGNALS

CP IU TO CP 99

TRACK AND SIGNAL PLAN AT
AUTO SIGNAL 84E & 84W, MP.QS-84.20

DESIGNED	DIGITIZED	CHECKED	DATE
			02-04-86

DRAWING	SHEET NO	NEXT SH	NEXT FILE	NEXT SH	FILE	SHEET
8406-0867	1	2	QS08670	E01	QS08670	S01