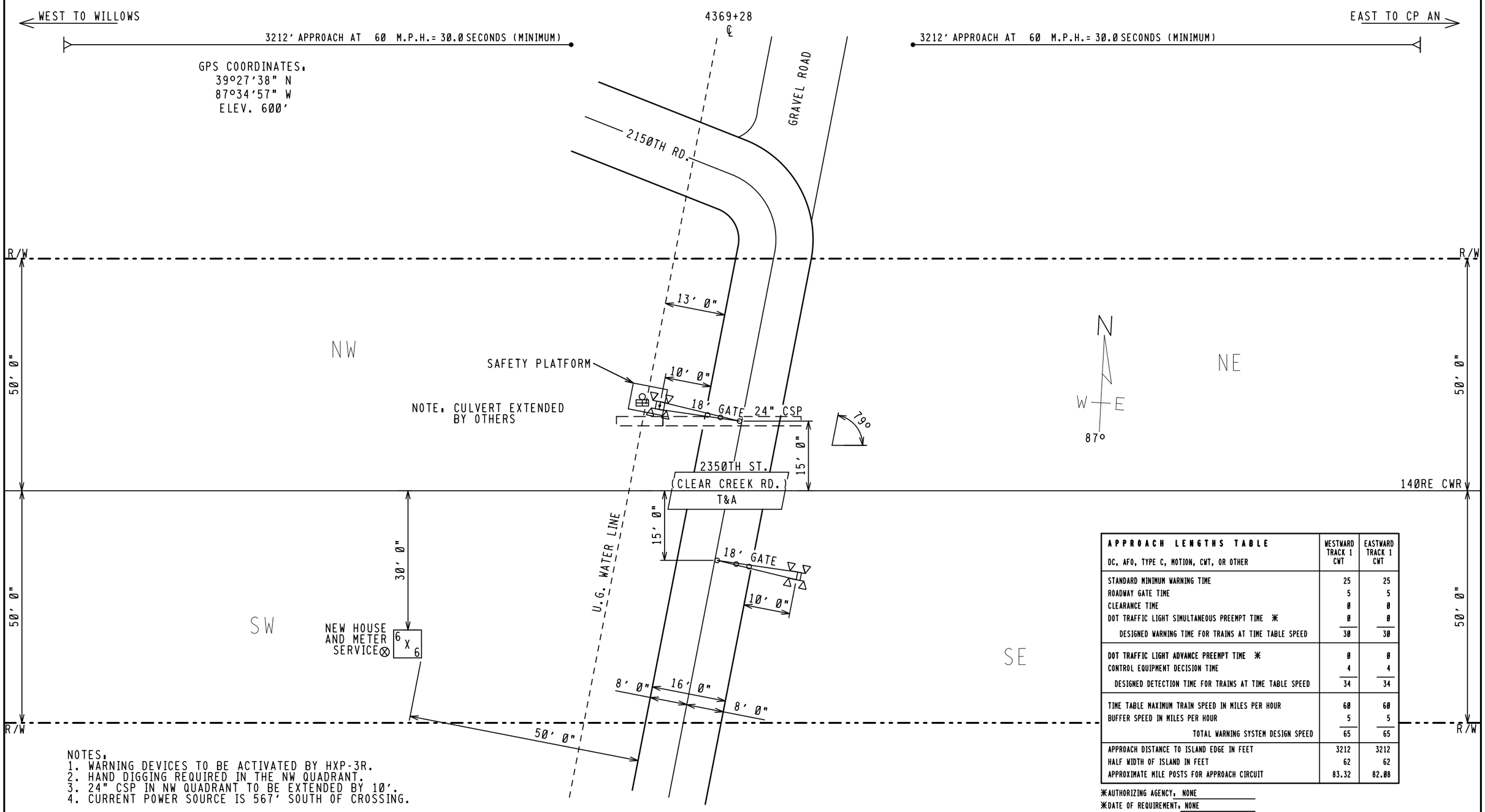


| APPROACH LENGTHS TABLE<br>DC, AFO, TYPE C, MOTION, CWT, OR OTHER | WESTWARD TRACK 1 CWT | EASTWARD TRACK 1 CWT |
|---|---|---|
| STANDARD MINIMUM WARNING TIME | 25 | 25 |
| ROADWAY GATE TIME | 5 | 5 |
| CLEARANCE TIME | 0 | 0 |
| DOT TRAFFIC LIGHT SIMULTANEOUS PREEMPT TIME ✳ | 0 | 0 |
| DESIGNED WARNING TIME FOR TRAINS AT TIME TABLE SPEED | 30 | 30 |
| DOT TRAFFIC LIGHT ADVANCE PREEMPT TIME ✳ | 0 | 0 |
| CONTROL EQUIPMENT DECISION TIME | 4 | 4 |
| DESIGNED DETECTION TIME FOR TRAINS AT TIME TABLE SPEED | 34 | 34 |
| TIME TABLE MAXIMUM TRAIN SPEED IN MILES PER HOUR | 60 | 60 |
| BUFFER SPEED IN MILES PER HOUR | 5 | 5 |
| TOTAL WARNING SYSTEM DESIGN SPEED | 65 | 65 |
| APPROACH DISTANCE TO ISLAND EDGE IN FEET | 3212 | 3212 |
| HALF WIDTH OF ISLAND IN FEET | 62 | 62 |
| APPROXIMATE MILE POSTS FOR APPROACH CIRCUIT | 83.32 | 82.08 |

✳AUTHORIZING AGENCY: NONE
✳DATE OF REQUIREMENT: NONE
✳AMOUNT OF TIME (SEC.): NONE

NOTES:
1. WARNING DEVICES TO BE ACTIVATED BY HXP-3R.
2. HAND DIGGING REQUIRED IN THE NW QUADRANT.
3. 24" CSP IN NW QUADRANT TO BE EXTENDED BY 10'.
4. CURRENT POWER SOURCE IS 567' SOUTH OF CROSSING.

| | | | | | | | |
|---|---|---|---|---|---|---|---|
| FILE NAME: QS8270.H01 | REVISION DATES | PRODUCED FOR: | PRODUCED BY: | LEGEND | GUARD RAIL | METER SERVICE ⊗ | STREET NAME: 2350TH ST. (CLEAR CREEK RD.) |
| DATE DRAWN: 07/19/2012 | 08-01-12 DRB | CSX TRANSPORTATION | invensys Rail | CSX ROW | O.H. POWER | POLE Ⓟ | CITY & STATE: MARSHALL, IL |
| DRAWN BY: MILLER, ROBERT | - - | RAIL TRANSPORT GROUP ENGINEERING | 7775 BAYMEADOWS WAY | R/R POLELINE | FENCE | FIRE PLUG Ⓕ | PROJECT #: IL2012030 |
| CHECKED BY: WILTSIE, JOE | - - | COMMUNICATIONS AND SIGNALS | SUITE 250 | GAS | WATER | SEWER CAP Ⓢ | OP #: IL0375 |
| SSC #: JXXD03058 | - - | | JACKSONVILLE, FL 32256 | FIBER OPTIC | SEWER | GAS VENT Ⓥ | DOT #: 546328P |

PROPOSED CROSSING LAYOUT
1"=20'

# INDEX

## CONTENTS

| SH. NO. | CONTENTS | REVISION NO. 1 | 2 | 3 | 4 | 5 | 6 | 7 | 8 | 9 |
|---|---|---|---|---|---|---|---|---|---|---|
| I01 | INDEX AND REVISIONS | ╱ | | | | | | | | |
| S01 | TRACK AND SIGNAL PLAN | ╱ | | | | | | | | |
| E01 | POWER DISTRIBUTION | ╱ | | | | | | | | |
| C01 | CROSSING DETECTION CIRCUITRY | ╱ | | | | | | | | |
| C02 | DETECTION DEVICE PROGRAM | ╱ | | | | | | | | |
| C03 | CROSSING WARNING DEVICE CIRCUITRY | ╱ | | | | | | | | |
| C04 | CROSSING WARNING DEVICE CIRCUITRY | ╱ | | | | | | | | |
| C05 | RECORDER CIRCUITS | ╱ | | | | | | | | |
| C06 | RECORDER PROGRAM | ╱ | | | | | | | | |

╱ = DESIGN COMPLETED

╳ = REVISION COMPLETED

REVISIONS

| REV. NO. | PROJECT NO. | DESIGN DATE | IN SERVICE DATE | REVISION DATE |
|---|---|---|---|---|
| 1 | IL2012030 | 08-01-12 | | |

TO BE COMPLETED ON A.I.S.

NEW WORK

invensys Rail

PROJ #. IL2012030
DES BY. D.BAUMGARTNER
CHK BY. D. ALBRIGHT
DATE. 08-01-12

= NOTE

1TRKHXP3R.I01
REV. 02-17-06

CSX TRANSPORTATION
RAIL TRANSPORT GROUP ENGINEERING
COMMUNICATIONS AND SIGNALS

2350TH ST. (CLEAR CREEK RD.) 546328P

INDEX AND REVISIONS
MARSHALL, IL M.P. QS-82.70

| DESIGNED | DIGITIZED | CHECKED | DATE |
|---|---|---|---|
| IRC/DRB | IRC/DRB | IRC/DBA | 08-01-12 |

| DESIGN DATE | REV. NO. | DRAWING | SHEET NO | FILE | SHEET |
|---|---|---|---|---|---|
| 08-01-12 | 1 | ----- | ----- | QS08270 | I01 |

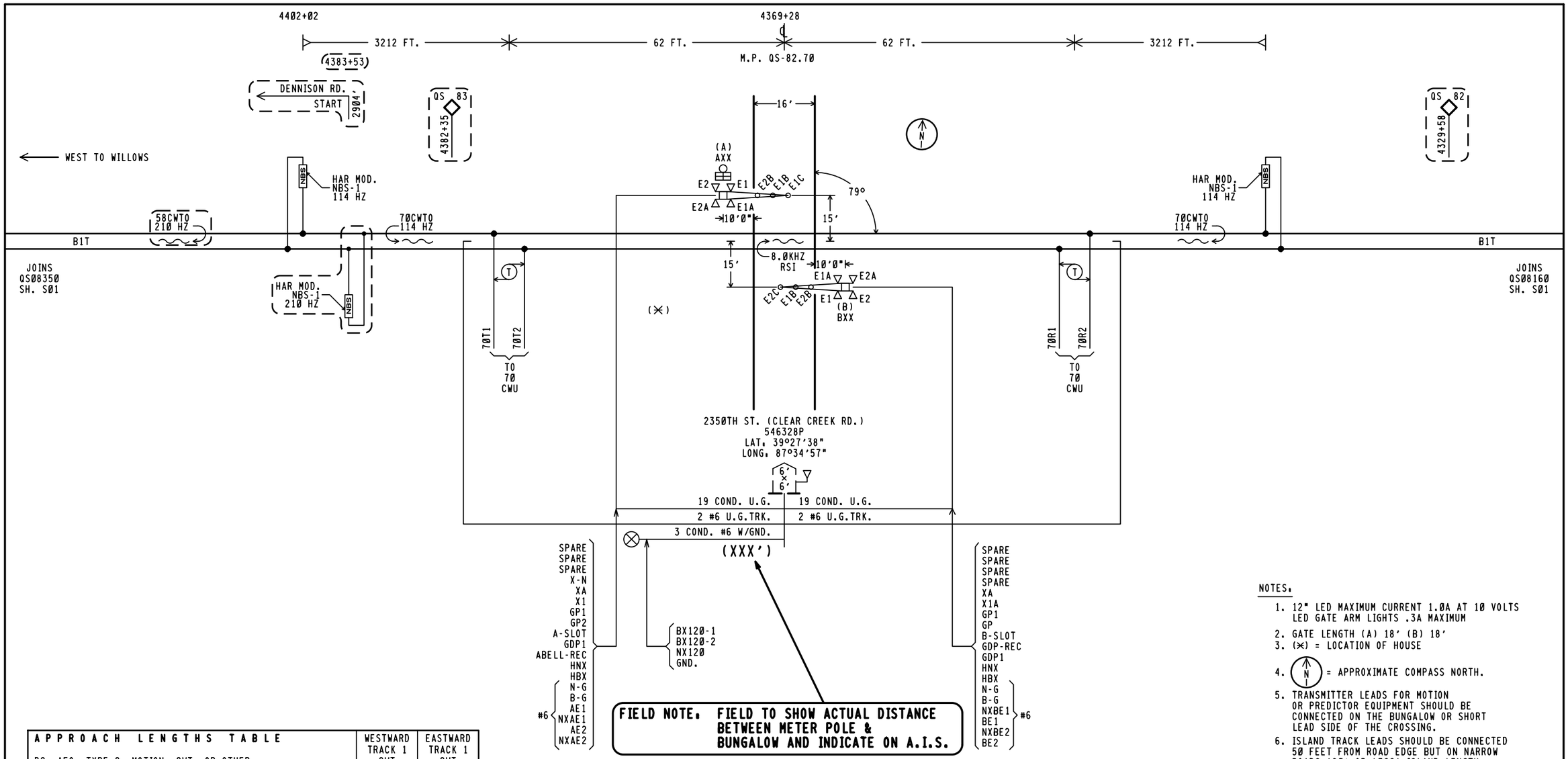


**FIELD NOTE. FIELD TO SHOW ACTUAL DISTANCE BETWEEN METER POLE & BUNGALOW AND INDICATE ON A.I.S.**

NOTES.

1. 12" LED MAXIMUM CURRENT 1.0A AT 10 VOLTS LED GATE ARM LIGHTS .3A MAXIMUM
2. GATE LENGTH (A) 18' (B) 18'
3. (✳) = LOCATION OF HOUSE
4. (N) = APPROXIMATE COMPASS NORTH.
5. TRANSMITTER LEADS FOR MOTION OR PREDICTOR EQUIPMENT SHOULD BE CONNECTED ON THE BUNGALOW OR SHORT LEAD SIDE OF THE CROSSING.
6. ISLAND TRACK LEADS SHOULD BE CONNECTED 50 FEET FROM ROAD EDGE BUT ON NARROW ROADS (20' OR LESS) ISLAND LENGTH SHALL BE 120 FEET.
7. WARNING SYSTEM APPROACH CIRCUIT DISTANCES ARE TO BE MEASURED FROM THE ISLAND TRACK CONNECTIONS.

| APPROACH LENGTHS TABLE<br>DC, AFO, TYPE C, MOTION, CWT, OR OTHER | WESTWARD TRACK 1 CWT | EASTWARD TRACK 1 CWT |
|---|---|---|
| STANDARD MINIMUM WARNING TIME IN SECONDS | 25 | 25 |
| ROADWAY GATE TIME IN SECONDS | 5 | 5 |
| CLEARANCE TIME IN SECONDS | 0 | 0 |
| DOT TRAFFIC LIGHT SIMULTANEOUS PREEMPT TIME IN SECONDS✳ | 0 | 0 |
| DESIGNED WARNING TIME FOR TRAINS AT TIME TABLE SPEED | 30 SEC. | 30 SEC. |
| DOT TRAFFIC LIGHT ADVANCE PREEMPT TIME IN SECONDS ✳ | 0 | 0 |
| CONTROL EQUIPMENT DECISION TIME IN SECONDS | 4 | 4 |
| DESIGNED DETECTION TIME FOR TRAINS AT TIME TABLE SPEED | 34 SEC. | 34 SEC. |
| TIME TABLE MAXIMUM TRAIN SPEED IN MILES PER HOUR | 60 | 60 |
| BUFFER SPEED IN MILES PER HOUR | 5 | 5 |
| TOTAL WARNING SYSTEM DESIGN SPEED IN MILES PER HOUR | 65 | 65 |
| APPROACH DISTANCE TO ISLAND EDGE IN FEET | 3212 | 3212 |
| HALF WIDTH OF ISLAND IN FEET | 62 | 62 |
| APPROXIMATE MILE POSTS FOR APPROACH CIRCUIT | 83.32 | 82.08 |

✳AUTHORIZING AGENCY. NONE
✳DATE OF REQUIREMENT. NONE
✳AMOUNT OF TIME (SEC.). NONE

**NEW WORK**

invensys Rail

PROJ #. IL2012030
DES BY. D.BAUMGARTNER
CHK BY. D. ALBRIGHT
DATE. 08-01-12

1TRKHXP3R.S01
REV. 02-17-06

CSX TRANSPORTATION
RAIL TRANSPORT GROUP ENGINEERING
COMMUNICATIONS AND SIGNALS

**2350TH ST. (CLEAR CREEK RD.) 546328P**

TRACK AND SIGNAL PLAN
MARSHALL, IL M.P. QS-82.70

| DESIGNED | DIGITIZED | CHECKED | DATE |
|---|---|---|---|
| IRC/DRB | IRC/DRB | IRC/DBA | 08-01-12 |

| DESIGN DATE | REV. NO. | DRAWING | SHEET NO | FILE | SHEET |
|---|---|---|---|---|---|
| 08-01-12 | 1 | ----- | ----- | QS08270 | S01 |

TOP ROW

| XR | | | XPR | | | GPR | | | EOR | | | POR | | |
|---|---|---|---|---|---|---|---|---|---|---|---|---|---|---|
| 12 | FB | B8 | 22 | F | B36 | 12 | B | B82 | 12 | FB | B81 | 12 | FB | B62 |
| 15 | FB | C30 | 25 | F | C30 | 15 | B | C30 | 15 | FB | C30 | 15 | FB | C30 |
| 22 | | | | | | 22 | | | 32 | FB | | 22 | FB | |
| 23 | | | | | | 25 | F | | 35 | FB | | 25 | FB | |
| 25 | F | | | | | 32 | | | | | | 32 | F | |
| 32 | | | | | | 35 | B | | | | | 35 | | |
| 35 | | | | | | | | | | | | | | |

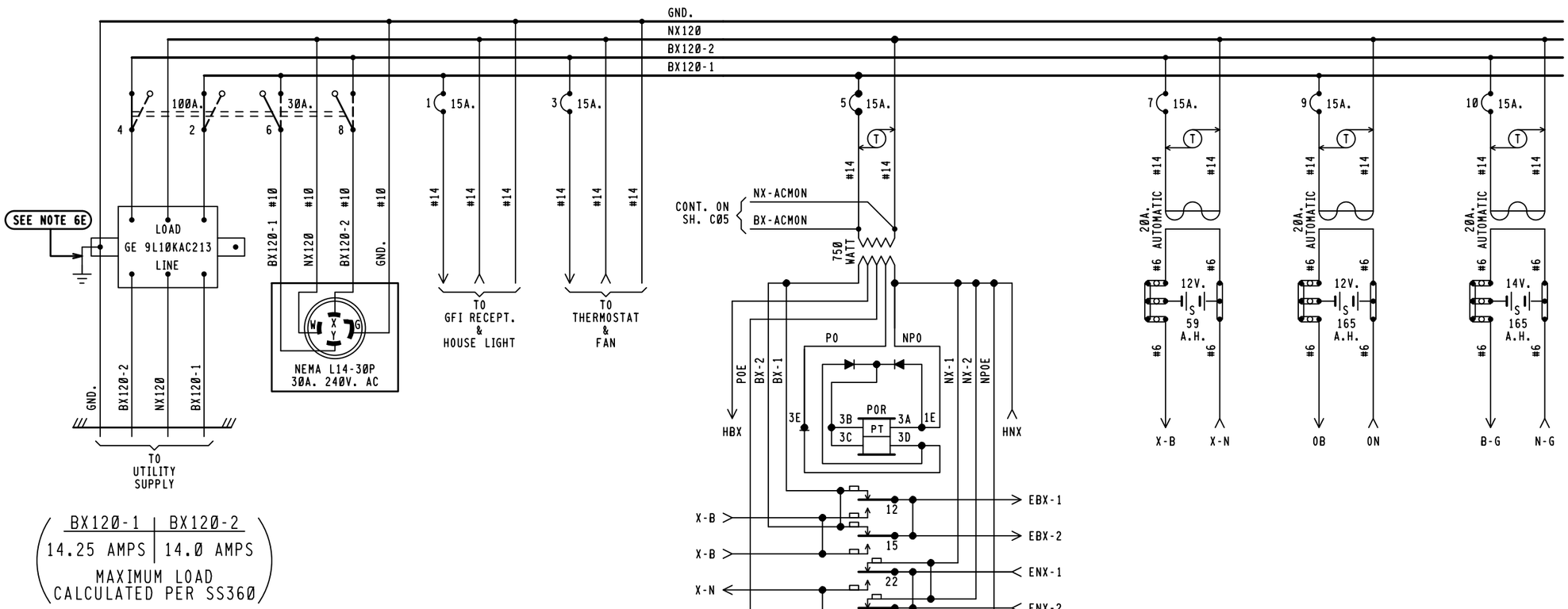


| BX120-1 | BX120-2 |
|---|---|
| 14.25 AMPS | 14.0 AMPS |

MAXIMUM LOAD
CALCULATED PER SS360

NOTES:

1 - REFERENCES ARE PER SCMS-13.
2 - ARRESTERS ARE PER SS382.
3 - SHELF RELAY PLACEMENT ON CONSIST CHART HAS NO SIGNIFICANCE.
4 - PLUG-IN RELAYS ARE VIEWED FROM THE FRONT OF RACK.
5 - BATTERY A.H. CAPACITY SHOWN IS THE MINIMUM REQUIREMENT.
6 - WIRING
  A - FEED TO ALL BUSSES, LIGHT CIRCUITS,MOTOR CIRCUITS TO BE #10 FLEX.
  B - 120-VOLT FEED FROM ENTRANCE TO POWER BUSS TO BE #10 FLEX.
  C - ALL TRACK WIRES TO BE #10 FLEX.
  D - ALL OTHERS TO BE #16 FLEX UNLESS NOTED.
  E - GROUND WIRE NOT NECESSARY WHEN GE ARRESTER IS MOUNTED ON GROUND PLANE OR METAL ENCLOSURE AFFIXED DIRECTLY TO BUNGALOW METALLIC STRUCTURAL MEMBER.
7 - CIRCUIT INTERRUPTERS 2 & 4 ARE MECHANICALLY INTERLOCKED WITH CIRCUIT INTERRUPTERS 6 & 8.

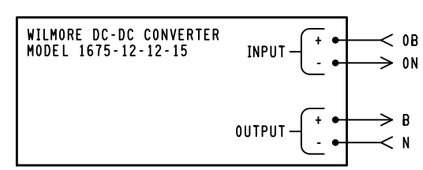


NEW WORK

invensys Rail

PROJ #. IL2012030
DES BY. D.BAUMGARTNER
CHK BY. D. ALBRIGHT
DATE. 08-01-12

= NOTE

1TRKHXP3R.E01
REV. 08-29-08

6'X 6' RELAY HOUSE W/FARADAY SHIELD

CSX TRANSPORTATION
RAIL TRANSPORT GROUP ENGINEERING
COMMUNICATIONS AND SIGNALS

2350TH ST. (CLEAR CREEK RD.) 546328P

POWER DISTRIBUTION
MARSHALL, IL M.P. QS-82.70

| DESIGNED | DIGITIZED | CHECKED | DATE |
|---|---|---|---|
| IRC/DRB | IRC/DRB | IRC/DBA | 08-01-12 |

| DESIGN DATE | REV. NO. | DRAWING | SHEET NO | FILE | SHEET |
|---|---|---|---|---|---|
| 08-01-12 | 1 | ----- | ----- | QS08270 | E01 |

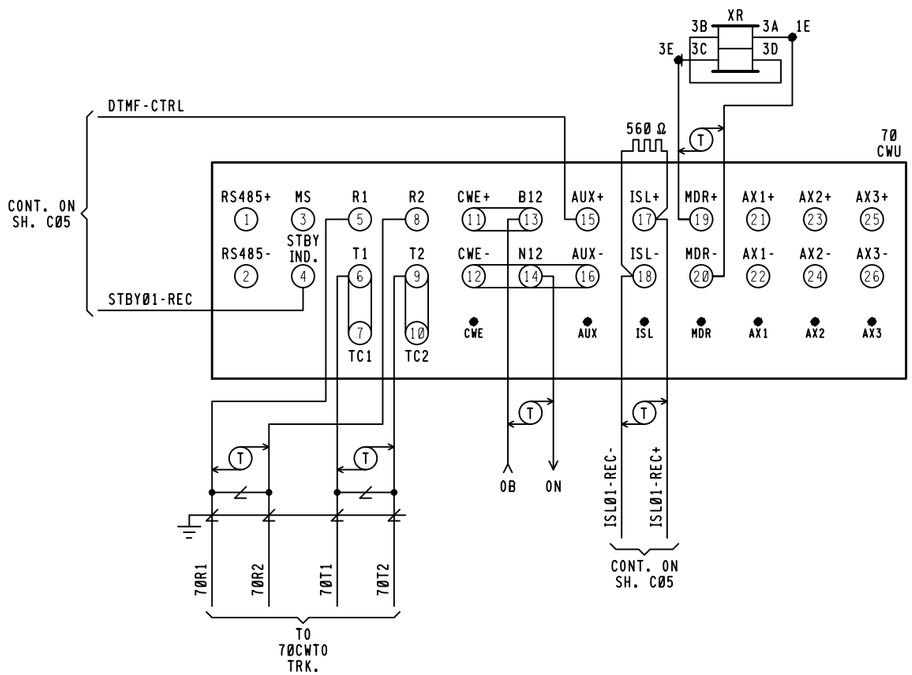


## 70CWU
## HXP-3R MODULES REQUIRED

| |
|---|
| (NOT INSTALLED) |
| RMM MODULE (RECORDER MEMORY) |
| SIM MODULE (SERIAL INTERFACE) |
| SIM MODULE (SERIAL INTERFACE) |
| TRM MODULE (TRANSCEIVER) |
| TRM MODULE (TRANSCEIVER) |
| RSI MODULE (ISLAND) |
| RSI MODULE (ISLAND) |
| RYD MODULE (RELAY DRIVE) |
| RYD MODULE (RELAY DRIVE) |
| CPU MODULE (CENTRAL PROCESSOR UNIT) |
| CPU MODULE (CENTRAL PROCESSOR UNIT) |
| TLM MODULE (TRANSFER LOGIC) |
| (NOT INSTALLED) AXD MODULE |
| (NOT INSTALLED) AXD MODULE |

FRONT VIEW

RSI MODULE
226736-000 8.0KHZ

| ISLAND FREQ. |
|---|
| 8.0KHZ |

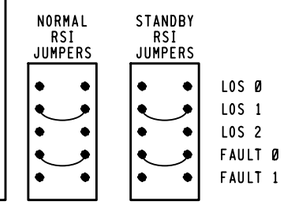


70
CWU

| CABINET SWITCHES |
|---|
| THESE SWITCHES ARE LOCATED ON MOTHERBOARD |
| MASTER/SLAVE<br>MASTER — SLAVE<br>S1 |

| SYSTEM CONFIGURATION | | | | |
|---|---|---|---|---|
| S6 & S7 DIP SWITCH POSITIONS | | | | |
| SWITCH | 1 | 2 | 3 | 4 |
| SWITCH POSITION | ON | OFF | OFF | OFF |
| APPROACH. | NORMAL | | (NOT USED) | |

| | FREQUENCY SELECT | | | | | |
|---|---|---|---|---|---|---|
| NORMAL | S2 & S3 DIP SWITCH POSITIONS 114 HZ | | | | | |
| | SWITCH | 1 | 2 | 3 | 4 | 5 |
| | SWITCH POSITION | OFF | ON | OFF | OFF | OFF |
| STANDBY | S4 & S5 DIP SWITCH POSITIONS 114 HZ | | | | | |
| | SWITCH | 1 | 2 | 3 | 4 | 5 |
| | SWITCH POSITION | OFF | ON | OFF | OFF | OFF |

TLM MODULE
JUMPERS AND SWITCHES

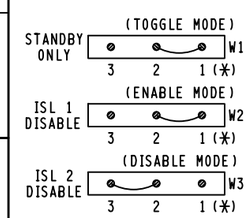


NOTE:
PIN 1 IS IDENTIFIED BY ASTERICK BELOW IT.
(☆) = MAY BE SET PER FIELD CONDITIONS.

MINUTE TIMEOUT SWITCH

| SETTING | (☆) 9 MINUTES | S1 |
|---|---|---|

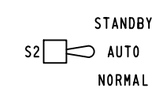


**NEW WORK**

invensys Rail

PROJ #: IL20120030
DES BY: D.BAUMGARTNER
CHK BY: D. ALBRIGHT
DATE: 08-01-12

CSX TRANSPORTATION
RAIL TRANSPORT GROUP ENGINEERING
COMMUNICATIONS AND SIGNALS

**2350TH ST. (CLEAR CREEK RD.) 546328P**

CROSSING DETECTION CIRCUITRY
MARSHALL, IL M.P. QS-82.70

1TRKHXP3R.C01
REV. 08-31-09

| DESIGNED | DIGITIZED | CHECKED | DATE |
|---|---|---|---|
| IRC/DRB | IRC/DRB | IRC/DBA | 08-01-12 |

| DESIGN DATE | REV. NO. | DRAWING | SHEET NO | FILE | SHEET |
|---|---|---|---|---|---|
| 08-01-12 | 1 | ----- | ----- | QS08270 | C01 |

70CWU

# HXP-3R APPLICATION DESIGN CARD

| OPTION 90 (CABINET #) | CABINET # |
|---|---|

| PASSWORD(_ _✳_ _)(SEE MANUAL 100052-001 AA0 1-27 | TRACK 1 | TRACK 2 | DEFAULT |
|---|---|---|---|
| APPROACH LENGTH ADJUSTMENT | 3212' | N/A | 9,999 FT. |
| WARNING TIME ADJUSTMENT | 34 SEC. | N/A | 99 SEC. |
| LUMPED IMPEDANCE ADJUSTMENT (LIA) | ✳ | N/A | 0 |
| TRANSMITTER CHECK ADJUSTMENT (TC) | ✳ | N/A | 0 |
| MOTION DETECT RESTART (MD RESTART) | 0 ☆ | N/A | 99% |
| OPTION 1 TRACK ENABLE (TK-ENA) | UP | N/A | UP (ALWAYS ENABLED) |
| OPTION 2 TRACK FREQUENCY (TK F0) | STRAP ◇ | N/A | 0 HZ |
| OPTION 3 CONSTANT WARNING/MOTION (CW/MD) | C | N/A | d (Motion) |
| OPTION 4 UNI/BIDIRECTIONAL (UNI-BI) | b | N/A | b (bi) |
| OPTION 5 NARROW BAND COMPENSATION (NBS-C) | ⊗ | N/A | 9,999 FT. |
| OPTION 6 CWE WARNING TIME (CWEWT) | 80 SEC. | N/A | 80 SEC. |
| OPTION 7 LOSS OF SHUNT TIME (LOS) | 16 SEC. | N/A | 16 SEC. |
| OPTION 8 LOS W/JOINTS NEAR ISLAND (IJ-LOS) | 5 SEC. ✳✳ | N/A | 5 SEC. |
| OPTION 9 BALLAST COMPENSATION (BC) | ✳ | N/A | FREQUENCY DEPENDANT ◎ |
| OPTION 10 PHASE COMPENSATION ADJUSTMENT (P-COMP) | ~~✳✳✳~~ | N/A | 0° |

| | AX OPTIONS △ | OPTION 11 AX DRIVE #1 | OPTION 12 AX DRIVE #2 | OPTION 13 AX DRIVE #3 | DEFAULT |
|---|---|---|---|---|---|
| ITEM 1 | TRACK ASSIGNMENT (TK-ASN) | N/A | N/A | N/A | 1 |
| ITEM 2 | OFFSET DISTANCE TRACK 1 (OF-TK1) | 0000' | 0000' | 0000' | 0 FT. |
| ITEM 3 | OFFSET DISTANCE TRACK 2 (OF-TK2) | N/A | N/A | N/A | N/A |
| ITEM 4 | WARNING TIME (WT) | 99 SEC. | 99 SEC. | 99 SEC. | 99 SEC. |
| ITEM 5 | MOTION DETECT RESTART (MD-RST) | 99 % | 99 % | 99 % | 99 % |
| ITEM 6 | CONSTANT WARNING/MOTION (CW/MD) | d | d | d | d (Motion) |
| ITEM 7 | CLEAR JOINTS LOS (CJ-LOS) | 00 SEC. | 00 SEC. | 00 SEC. | 0 SEC. |
| ITEM 8 | POST JOINT DETECTION (PJ-DET) | 15 SEC. | 15 SEC. | 15 SEC. | 15 SEC. |
| ITEM 9 | POST JOINT RX (PJ-RX) | 15 | 15 | 15 | 15 |
| ITEM 10 | POSITIVE START | dn | dn | dn | dn |

| OPTION 17 MDR DRIVE OR AX RELAY DRIVE SELECTION (MDR-AX) | ◎ | N/A | dn (STATUS ONLY) ◎ |
|---|---|---|---|

| | OPTION 17 SUB-MENU | TRACK 1 | TRACK 2 | DEFAULT |
|---|---|---|---|---|
| ITEM 1 | MDR-AX OFFSET DISTANCE TRK. 1(OF-TK1) & TRK. 2(OF-TK2) | 0000' | N/A | 0 FT.= CONFIGURED AS MDR |
| ITEM 2 | MDR-AX CLEAR JOINT LOS TIME (CJ-LOS) | 00 SEC. | N/A | 0 SEC. |
| ITEM 3 | MDR-AX POST JOINT DETECTION TIME (PJ-DET) | 15 SEC. | N/A | 15 SEC. |
| ITEM 4 | POST JOINT RX (PJ-RX) | 15 | N/A | 15 (0 = DISABLE) |
| OPTION 18 | MOTION DETECTOR TIMER (MD-TMR) | 10 MIN. | N/A | 10 MIN. (0 = DISABLE) |
| OPTION 19 | MINIMUM WARNING TIME WITH ADVANCED PREEMPTION (MIN-WT) | 00 SEC. | N/A | 00 SEC. (0 = DISABLE) |
| | OPTION 20 FALSE SHUNT TIMER ADJUSTMENT (FS-TMR) | | | |
| ITEM 1 | FALSE SHUNT RX (FS-RX) | 0 | N/A | 0, 0 = DISABLE |
| ITEM 2 | FALSE SHUNT TIMER ADJUSTMENT (FS-TM) | 10 | N/A | 10 |
| | OPTION 21 POSITIVE START RX & TIMER ADJUSTMENT (POS-ST) | | | |
| ITEM 1 | POSITIVE START RX (POS-RX) | 0 | N/A | 0, 0 = DISABLE |
| ITEM 2 | POSITIVE START TIMER (POS-TM) | 10 | N/A | 10 |
| | OPTION 22 APPROACH RELEASE RX (AR-TM) | | | |
| ITEM 1 | APPROACH RELEASE RX (AR-RX) | 0 | N/A | 0, 0 = DISABLE |
| ITEM 2 | APPROACH RELEASE TIMER (AR-TM) | 10 | N/A | 10 |
| OPTION 47 | AUTO RX ADJUSTMENT (ATO-RX) | dn | N/A | dn = DISABLE |
| OPTION 48 | PREDICTIVE FILTER ENABLE/DISABLE (PF-ENA) | dn | N/A | dn = DISABLE |
| OPTION 49 | RESET LOCAL PARAMETERS TO DEFAULT SETTINGS (RESET) | | | PAGE 3-14 & 3-41 |
| OPTION 50 | RECORDER PRINTER CONTROL (PRNTR) | ⊕ | | PAGE 1-47 & 3-41 |
| OPTION 51 | CLOCK ADJUSTMENT (CLOCK) | ⊕ | | PAGE 3-32 |
| | OPTION 70 LOCAL SERIAL I/O PORT ADJUSTMENT (LSP) | | | |
| ITEM 1 | BAUD RATE | 38.4 | ⊕ | PAGE 1-47 & 3-42 |
| ITEM 2 | DBITS (DATA BITS) | 8 | ⊕ | PAGE 1-47 & 3-42 |
| ITEM 3 | PA (PARITY) | NO(-=NO PARITY) | ⊕ | PAGE 1-47 & 3-42 |
| OPTION 90 | CABINET NUMBER DISPLAY (CAB) | ✳ | | PAGE 1-47 & 3-41 |
| OPTION 91 | HXP-3 OPERATING PROGRAM VERSION NUMBER (VERS) | ✳ | | VERSION 35.0 |
| OPTION 99 | RESET PASSWORD TIMER (TIMER) | ⊕ | | PAGE 3-30 |

NOTE:

✳ = ENTRY TO BE DONE ON AS-IN-SERVICE.

☆ = NORMALLY SET AT "0" SEE MANUAL 100052-001 AA0 PG. 1-46 & 3-41.

◇ = THE WORD STRAP IS DISPLAYED WHEN FREQUENCY SELECT DIP SWITCHES USED TO SELECT A STANDARD FREQUENCY.

⊗ = ADJUSTMENT NECESSARY ONLY WHEN AX RELAY DRIVE MODULE USED.

✳✳ = ADJUSTMENT NECESSARY IF INSULATED JOINTS ARE LOCATED NEAR ISLAND CIRCUIT.

~~✳✳✳~~ = ADJUSTMENT NECESSARY ONLY IF VERY POOR BALLAST CONDITIONS NEED TO BE COMPENSATED.

◎ = OPTION 17 SUB-MENU USED ONLY WHEN AX RELAY DRIVE OPERATION IS SELECTED. ENTERING AN OFFSET DISTANCE VALUE OTHER THAN ZERO ASSIGNS A MDR AS AN AX DRIVE.

△ 1. WHEN AXD MODULES ARE NOT INSTALLED, THEIR ASSOCIATED OPTIONS AND ADJUSTMENTS ARE NOT DISPLAYED.
2. PROGRAM UNUSED AX OPTION(S) SAME AS OPTION 11. IF AX OPTION 12 OR 13 IS USED IN FUTURE THEN REPROGRAM AS APPLICABLE.

◎ = FREQUENCY DEPENDANT, RANGE BETWEEN 50-250 TO BE SUPPLIED ON AS-IN-SERVICE.

⊕ = OPTIONS 50-99 ARE NON-VITAL AND NOT REQUIRED FOR INITIAL SETUP. SEE MANUAL 100052-001 AA0. FOR OPTIONS 49 TO 99 SEE PAGES AS LISTED IN DEFAULT COLUMN.

⊕ = SET CORRECT LOCAL TIME AND DATE. TIME OF DAY SHOULD BE SYNCRONIZED WITH TIME SHOWN BY EXTERNAL EVENT RECORDER.

**NEW WORK**

invensys Rail

PROJ #: IL2012030
DES BY: D.BAUMGARTNER
CHK BY: D. ALBRIGHT
DATE: 08-01-12

CSX TRANSPORTATION
RAIL TRANSPORT GROUP ENGINEERING
COMMUNICATIONS AND SIGNALS

**2350TH ST. (CLEAR CREEK RD.) 546328P**

DETECTION DEVICE PROGRAM
MARSHALL, IL M.P. QS-82.70

1TRKHXP3R.C02
REV. 10-31-07

| DESIGNED | DIGITIZED | CHECKED | DATE |
|---|---|---|---|
| IRC/DRB | IRC/DRB | IRC/DBA | 08-01-12 |

| DESIGN DATE | REV. NO. | DRAWING | SHEET NO | FILE | SHEET |
|---|---|---|---|---|---|
| 08-01-12 | 1 | ----- | ----- | QS08270 | C02 |

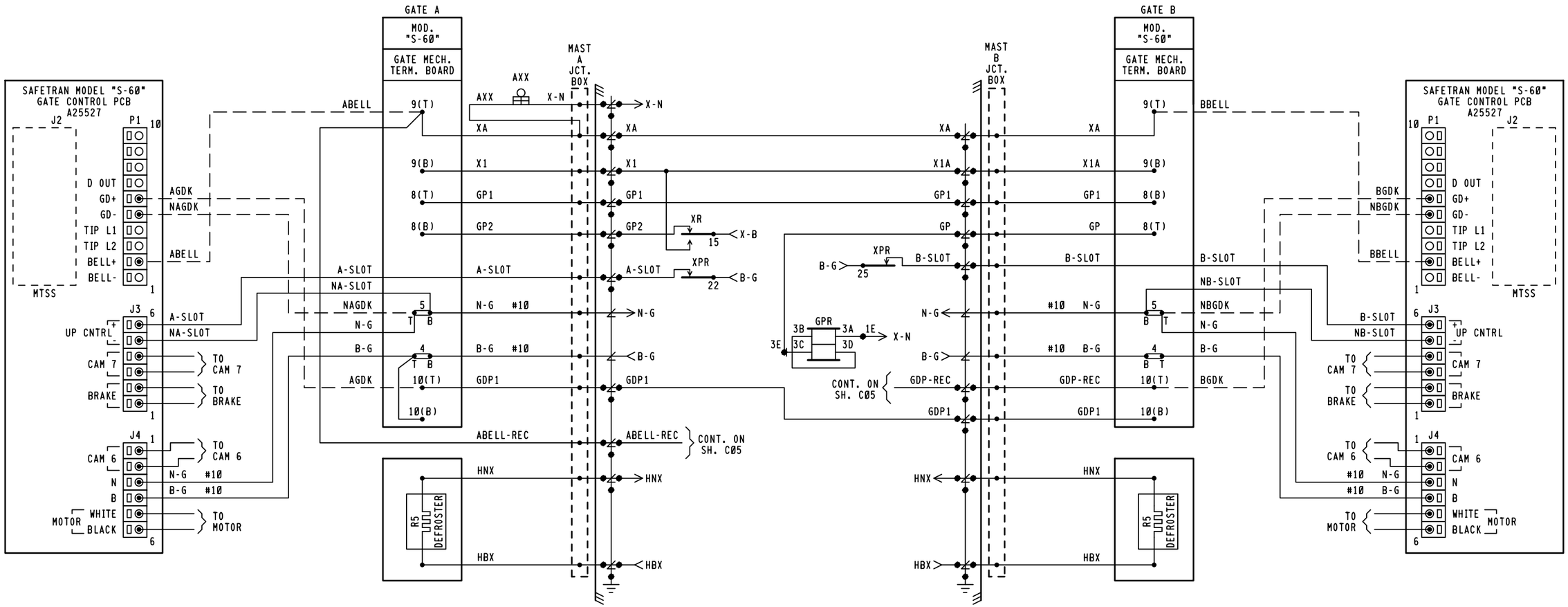


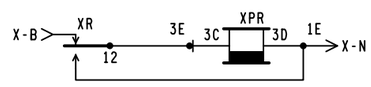


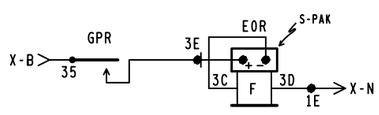


**NEW WORK**

invensys Rail

PROJ #: IL2012030
DES BY: D.BAUMGARTNER
CHK BY: D. ALBRIGHT
DATE: 08-01-12

1TRKHXP3R.C03A
REV: 03-22-12

CSX TRANSPORTATION
RAIL TRANSPORT GROUP ENGINEERING
COMMUNICATIONS AND SIGNALS

**2350TH ST. (CLEAR CREEK RD.) 546328P**

CROSSING WARNING DEVICE GATE CIRCUITRY
MARSHALL, IL M.P. QS-82.70

| DESIGNED | DIGITIZED | CHECKED | DATE |
|---|---|---|---|
| IRC/DRB | IRC/DRB | IRC/DBA | 08-01-12 |

| DESIGN DATE | REV. NO. | DRAWING | SHEET NO | FILE | SHEET |
|---|---|---|---|---|---|
| 08-01-12 | 1 | ----- | ----- | QS08270 | C03 |

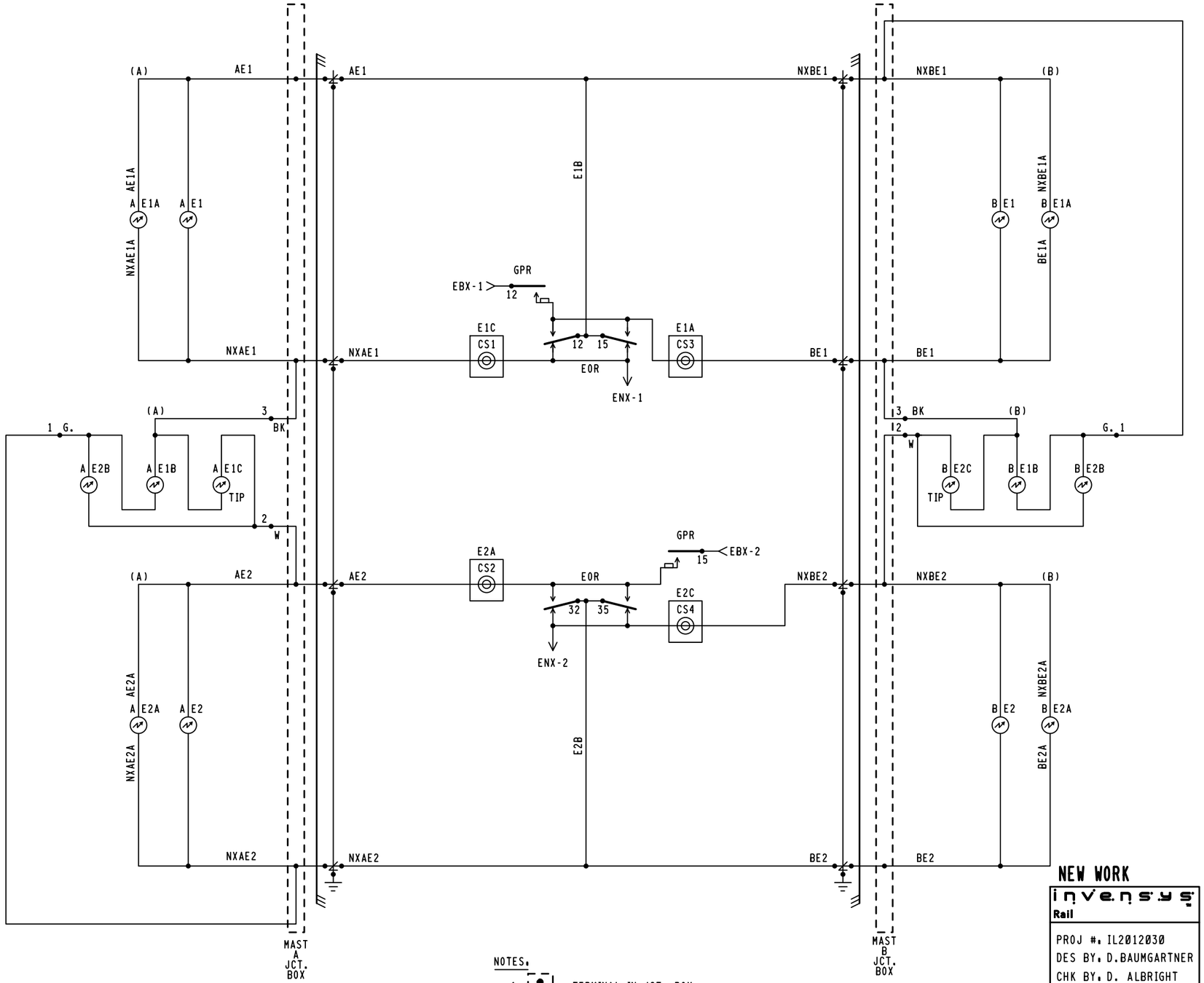


NOTES.

1. = TERMINAL IN JCT. BOX
2. WHEN 7 OR MORE LIGHTS ON A SINGLE STRUCTURE REFER TO SS-382 FOR REQUIRED ARRESTER RATING.

**NEW WORK**

invensys Rail

PROJ #. IL2012030
DES BY. D.BAUMGARTNER
CHK BY. D. ALBRIGHT
DATE. 08-01-12

CSX TRANSPORTATION
RAIL TRANSPORT GROUP ENGINEERING
COMMUNICATIONS AND SIGNALS

**2350TH ST. (CLEAR CREEK RD.) 546328P**

CROSSING WARNING DEVICE CIRCUITRY
MARSHALL, IL M.P. QS-82.70

1TRKHXP3R.C04
REV. 04-30-04

| DESIGNED | DIGITIZED | CHECKED | DATE |
|---|---|---|---|
| IRC/DRB | IRC/DRB | IRC/DBA | 08-01-12 |

| DESIGN DATE | REV. NO. | DRAWING | SHEET NO | FILE | SHEET |
|---|---|---|---|---|---|
| 08-01-12 | 1 | ----- | ----- | QS08270 | C04 |

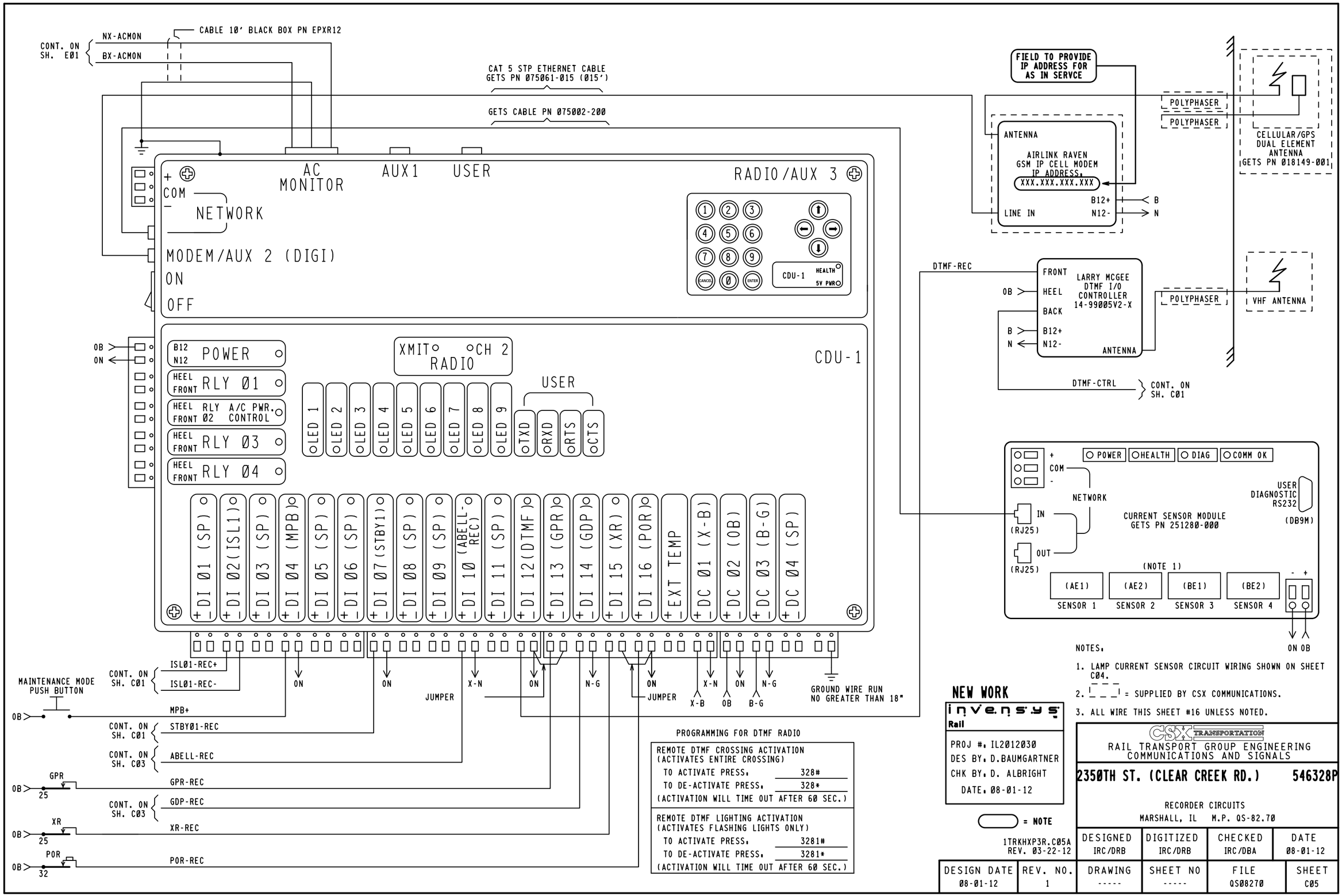
CONT. ON
SH. E01
NX-ACMON
BX-ACMON
CABLE 10' BLACK BOX PN EPXR12
CAT 5 STP ETHERNET CABLE
GETS PN 075061-015 (015')
GETS CABLE PN 075002-200
FIELD TO PROVIDE
IP ADDRESS FOR
AS IN SERVCE
POLYPHASER
POLYPHASER
CELLULAR/GPS
DUAL ELEMENT
ANTENNA
GETS PN 018149-001
ANTENNA
AIRLINK RAVEN
GSM IP CELL MODEM
IP ADDRESS,
XXX.XXX.XXX.XXX
B12+
N12-
LINE IN
B
N
+
COM
-
NETWORK
AC
MONITOR
AUX1
USER
RADIO/AUX 3
MODEM/AUX 2 (DIGI)
ON
OFF
CDU-1
HEALTH
5V PWR
DTMF-REC
FRONT
HEEL
BACK
LARRY MCGEE
DTMF I/O
CONTROLLER
14-99005V2-X
B12+
N12-
ANTENNA
POLYPHASER
VHF ANTENNA
DTMF-CTRL
CONT. ON
SH. C01
OB
ON
B12
N12
POWER
HEEL
FRONT
RLY 01
RLY 02
A/C PWR.
CONTROL
RLY 03
RLY 04
XMIT
CH 2
RADIO
CDU-1
LED 1
LED 2
LED 3
LED 4
LED 5
LED 6
LED 7
LED 8
LED 9
USER
TXD
RXD
RTS
CTS
DI 01 (SP)
DI 02 (ISL1)
DI 03 (SP)
DI 04 (MPB)
DI 05 (SP)
DI 06 (SP)
DI 07 (STBY1)
DI 08 (SP)
DI 09 (SP)
DI 10 (ABELL-REC)
DI 11 (SP)
DI 12 (DTMF)
DI 13 (GPR)
DI 14 (GDP)
DI 15 (XR)
DI 16 (POR)
EXT TEMP
DC 01 (X-B)
DC 02 (OB)
DC 03 (B-G)
DC 04 (SP)
POWER
HEALTH
DIAG
COMM OK
NETWORK
IN
(RJ25)
OUT
(RJ25)
CURRENT SENSOR MODULE
GETS PN 251280-000
USER
DIAGNOSTIC
RS232
(DB9M)
(NOTE 1)
(AE1)
(AE2)
(BE1)
(BE2)
SENSOR 1
SENSOR 2
SENSOR 3
SENSOR 4
ON OB
CONT. ON
SH. C01
ISL01-REC+
ISL01-REC-
ON
ON
X-N
ON
N-G
ON
JUMPER
JUMPER
X-N
ON
N-G
X-B
OB
B-G
GROUND WIRE RUN
NO GREATER THAN 18"
MAINTENANCE MODE
PUSH BUTTON
OB
MPB+
CONT. ON
SH. C01
STBY01-REC
CONT. ON
SH. C03
ABELL-REC
GPR
OB
25
GPR-REC
CONT. ON
SH. C03
GDP-REC
XR
OB
25
XR-REC
POR
OB
32
POR-REC
PROGRAMMING FOR DTMF RADIO
REMOTE DTMF CROSSING ACTIVATION
(ACTIVATES ENTIRE CROSSING)
TO ACTIVATE PRESS. 328#
TO DE-ACTIVATE PRESS. 328*
(ACTIVATION WILL TIME OUT AFTER 60 SEC.)
REMOTE DTMF LIGHTING ACTIVATION
(ACTIVATES FLASHING LIGHTS ONLY)
TO ACTIVATE PRESS. 3281#
TO DE-ACTIVATE PRESS. 3281*
(ACTIVATION WILL TIME OUT AFTER 60 SEC.)
NOTES.
1. LAMP CURRENT SENSOR CIRCUIT WIRING SHOWN ON SHEET C04.
2. = SUPPLIED BY CSX COMMUNICATIONS.
3. ALL WIRE THIS SHEET #16 UNLESS NOTED.
NEW WORK
invensys
Rail
PROJ #. IL2012030
DES BY. D.BAUMGARTNER
CHK BY. D. ALBRIGHT
DATE. 08-01-12
= NOTE
1TRKHXP3R.C05A
REV. 03-22-12
CSX TRANSPORTATION
RAIL TRANSPORT GROUP ENGINEERING
COMMUNICATIONS AND SIGNALS
2350TH ST. (CLEAR CREEK RD.)
546328P
RECORDER CIRCUITS
MARSHALL, IL M.P. QS-82.70
DESIGNED IRC/DRB
DIGITIZED IRC/DRB
CHECKED IRC/DBA
DATE 08-01-12
DESIGN DATE 08-01-12
REV. NO. 1
DRAWING -----
SHEET NO -----
FILE QS08270
SHEET C05

| | DEFAULTS AND/OR STYLE | FIELD RECORD |
|---|---|---|
| HAWK EXECUTIVE PROGRAM | VERSION 2.7, COMPILED ON NOV. 11, 2003 | VERSION ____, COMPILED ON _____ (FIELD TO ENTER) |
| CSXT USER PROGRAM (IF LOADED) | VERSION 1.01, COMPILED ON 12-01-03 (MM-DD-YY) | VERSION , COMPILED ON _____ (FIELD TO ENTER) |
| | | |
| SYSTEM SETTINGS | | |
| DATE & TIME (ENABLE DAYLIGHT SAVINGS TIME = Y (YES) | MM-DD-YY 23:01:59 | n/a |
| MILE POST | XYZ-789.01 | QS-82.70 |
| SITE NAME | MAIN ST (SR-17,US-1) | 2350TH ST. (CLEAR CREEK RD.) |
| DOT NUMBER | 123456A | 546328P |

NOTE TO INSPECTOR, AT IN SERVICE OF HAWK OR UPDATE OF ITS INTERNAL EXECUTIVE PROGRAM OR ITS CSXT USER PROGRAM, THE VERSION NUMBER AND COMPILE DATES OF EACH PROGRAM MUST BE INSERTED IN THE BLANK FIELDS.

| BATTERY INPUTS | DC 01 | DC 02 | DC 03 | DC 04 |
|---|---|---|---|---|
| CHANNEL | 1 | 2 | 3 | 4 |
| BATTERY CHANNEL NAMES | X-B BULB BATTERY | OB ELECTRONIC BATTERY | B-G GATE BATTERY | SPARE |
| BATTERY CHANNEL I.D. | X-B | OB | B-G | SP |
| SAMPLE PERIOD | 500 ms | 500 ms | 500 ms | 10,000 ms |
| RESOLUTION | 00.2 V | 00.2 V | 01.0 V | 02.0 V |

| DIGITAL INPUTS | DI 01 | DI 02 | DI 03 | DI 04 | DI 05 |
|---|---|---|---|---|---|
| CHANNEL | 1 | 2 | 3 | 4 | 5 |
| NAME | | ISLAND TRACK 1 | | MAINTENANCE PB | |
| ID | SP | ISL1 | SP | MPB | SP |
| ON NAME | | ISL1 UP | | MAINTENANCE PB HI | |
| OFF NAME | | ISL1 DN | | MAINTENANCE PB LOW | |
| ON DEBOUNCE TIME | 1000 ms | 100 ms | 1000 ms | 100 ms | 1000 ms |
| OFF DEBOUNCE TIME | 1000 ms | 100 ms | 1000 ms | 100 ms | 1000 ms |
| TOGGLE PERIOD | 500 ms | 500 ms | 500 ms | 500 ms | 500 ms |

| DIGITAL INPUTS | DI 06 | DI 07 | DI 08 | DI 09 | DI 10 |
|---|---|---|---|---|---|
| CHANNEL | 6 | 7 | 8 | 9 | 10 |
| NAME | | STANDBY1 | | | ABELL REC |
| ID | SP | STBY1 | SP | SP | ABELL-REC |
| ON NAME | | STANDBY UNIT | | | BELL RINGING |
| OFF NAME | | PRIMARY UNIT | | | BELL NOT RINGING |
| ON DEBOUNCE TIME | 1000 ms | 100 ms | 1000 ms | 1000 ms | 100 ms |
| OFF DEBOUNCE TIME | 1000 ms | 100 ms | 1000 ms | 1000 ms | 100 ms |
| TOGGLE PERIOD | 500 ms | 500 ms | 500 ms | 500 ms | 500 ms |

| DIGITAL INPUTS | DI 11 | DI 12 | DI 13 | DI 14 | DI 15 | DI 16 |
|---|---|---|---|---|---|---|
| CHANNEL | 11 | 12 | 13 | 14 | 15 | 16 |
| NAME | | DTMF TEST | GPR | GDP | XR | POR |
| ID | SP | DTMF | GPR | GDP | XR | POR |
| ON NAME | | DTMF TEST ON | GATE VERTICAL | GATE HORIZ | XR UP | POR UP |
| OFF NAME | | DTMF TEST OFF | LIGHTS FLASH | NOT HORIZ | XR DN | POR DN |
| ON DEBOUNCE TIME | 1000 ms | 100 ms | 100 ms | 100 ms | 100 ms | 100 ms |
| OFF DEBOUNCE TIME | 1000 ms | 100 ms | 100 ms | 100 ms | 100 ms | 100 ms |
| TOGGLE PERIOD | 500 ms | 500 ms | 500 ms | 500 ms | 500 ms | 500 ms |

| MODULE-DIGITAL 4 QUAD CURRENT SENSOR SERIAL NUMBER: [_____] (BLANK UNTIL AIS RECEIVED) | | | | |
|---|---|---|---|---|
| RESOLUTION (AMPS RMS) : [00.2] ARMS | | | | |
| AUTOMATICALLY ALLOCATED DIGITAL INPUT | DI 17 | DI 18 | D1 19 | D1 20 |
| DIGITAL 4 QUAD CURRENT SENSOR | 1 | 2 | 3 | 4 |
| NAME | E1C | E2A | E1A | E2C |
| ID | E1C | E2A | E1A | E2C |
| LIT BULB COUNT ON EACH CIRCUIT | 4 | 4 | 4 | 4 |
| CURRENT READING IN AMPS AT APPROXIMATE 10.0 VOLTS BULB VOLTAGE | 2.6 | 2.6 | 2.6 | 2.6 |

| CHANNEL | 1 | 2 | 3 | 4 |
|---|---|---|---|---|
| NAME | RELAY OUTPUT 01 | RELAY OUTPUT 02 | RELAY OUTPUT 03 | RELAY OUTPUT 04 |
| I.D. | RLY01 | RLY02 | RLY03 | RLY04 |
| ON NAME | ON | ON | ON | ON |
| OFF NAME | OFF | OFF | OFF | OFF |
| PULSE DURATION | 1000 ms | 1000 ms | 1000 ms | 1000 ms |

| PORT | USER | AUX 1 | MODEM/AUX 2 |
|---|---|---|---|
| BAUD RATE | 38400 | 9600 | 9600 |
| PARITY | N | N | N |
| DATA BITS | 8 | 8 | 8 |
| STOP BITS | 1 | 1 | 1 |
| FLOW CONTROL | NONE | NONE | NONE |

NEW WORK

invensys Rail

PROJ #. IL2012030
DES BY. D.BAUMGARTNER
CHK BY. D. ALBRIGHT
DATE. 08-01-12

= NOTE

1TRKHXP3R.C06
REV. 04-30-04

CSX TRANSPORTATION
RAIL TRANSPORT GROUP ENGINEERING
COMMUNICATIONS AND SIGNALS

2350TH ST. (CLEAR CREEK RD.) 546328P

RECORDER PROGRAM
MARSHALL, IL M.P. QS-82.70

| DESIGNED | DIGITIZED | CHECKED | DATE |
|---|---|---|---|
| IRC/DRB | IRC/DRB | IRC/DBA | 08-01-12 |

| DESIGN DATE | REV. NO. | DRAWING | SHEET NO | FILE | SHEET |
|---|---|---|---|---|---|
| 08-01-12 | 1 | ----- | ----- | QS08270 | C06 |

# INDEX


| SH. NO. | CONTENTS | REVISION NO. 1 | 2 | 3 | 4 | 5 | 6 |
|---|---|---|---|---|---|---|---|
| 1 | TITLE, NOTES, INDEX, & REVISIONS | ✓ | ✓ | ✓ | ✓ | ✓ | ⊘ |
| 2 | LOCATION PLAN | ✓ | | ✓ | ✓ | ✓ | ⊘ |
| 3 | ELECTROCODE CIRCUITS - E & W MAIN | ✓ | | ✓ | ✓ | | ⊘ |
| 4 | ELECTROCODE CIRCUITS - CONTROLLED SIDING | ✓ | | ✓ | ✓ | | |
| 5 | HOME NETWORK & PLANT TRACK CIRCUITS | ✓ | | | ✓ | | |
| 6 | SIGNAL LIGHTING CIRCUITS | ✓ | | | | | |
| 7 | TIME AND ROUTE LOCKING CIRCUITS | ✓ | | ✓ | | | |
| 8 | FOLLOW STICK AND SIGNAL REPEATER CIRCUIT | ✓ | | | | | |
| 9 | NO. 1 SWITCH CONTROL CIRCUITS | ✓ | | | | | |
| 10 | POWER DISTRIBUTION | ✓ | ✓ | ✓ | ✓ | | |
| 11 | CODE CHART, CODE LINE AND SURGE PROTECTION | ✓ | | | | | |
| 12 | CODE INPUT AND DOOR ALARM CIRCUITS | ✓ | ✓ | | | | |
| 13 | EMERGENCY CONTROL PANEL CIRCUITS | ✓ | | | | | |
| 14 | CODE OUTPUT CONNECTIONS | ✓ | | | | | |
| 15 | CODE OUTPUT CONNECTIONS | ✓ | | | | | |
| 16 | CODE RACK LAYOUT | ✓ | | | | | |
| 17 | RFL CABINET AND SURGE UNIT | ✓ | | | | | |
| 18 | EMERGENCY CONTROL PANEL | ✓ | | | | | |
| 19 | EMERGENCY CONTROL PANEL | ✓ | | | | | |
| 20 | RELAY CONNECTIONS | ✓ | ✓ | ✓ | ✓ | | |
| 21 | P.C.SOFTWARE | ✓ | | | | | |
| 22 | P.C.SOFTWARE | ✓ | | | | | |
| 23 | P.C.SOFTWARE | ✓ | | | | | |
| 24 | P.C.SOFTWARE | ✓ | | | | | |
| 25 | P.C.SOFTWARE | ✓ | | | | | |
| 26 | P.C.SOFTWARE | ✓ | | | | | |
| 27 | P.C.SOFTWARE | ✓ | | | | | |
| 28 | P.C.SOFTWARE | ✓ | | | | | |
| 29 | P.C.SOFTWARE | ✓ | | | | | |
| 30 | P.C.SOFTWARE | ✓ | | | | | |
| 31 | 3000D2 SAFETRAN GRADE CROSSING PREDICTOR CIRCUITS | | | ✓ | ✓ | | |


## NOTES

▭ = FOR MATERIAL REFERENCE SEE PLAN S-1002

⊗ = DENOTES TWISTED PAIR GROUND IN ACCORDANCE WITH CS-9001-A

## REVISIONS

1 08-03-86
TCS INSTALLED TERRE HAUTE
TO EAST ST. LOUIS
WO/AFE NO.JW-347 PFC NO.2
IN SERVICE. 08-25-87
PER. HDW
DDD | MAW
DIVISION

2 02-14-96
PLAN REVISED PER INSPECTION
C&S.
WO/AFE NO. JU597
IN SERVICE. 05-13-94
PER. JED
GAB | GAB

3 03-04-96 JJS | DMR | JST | HEI
PLAN REVISED ACCOUNT OF WARNING
DEVICES ADDED AT T.R. 352.
WO/AFE NO.48749
IN SERVICE. 06-12-97
PER. RAG
GAB | GAB

03-01-00 ABC IL1999055

4 10-22-99 SWE | SWE | SWE
PLAN REVISED ACCOUNT OF
TERRE HAUTE - REPLACE
MICROCODE WITH EC4.

CSX PROJ.NO. IN1999097
CSX OP/AFE NO. A24513
IN SERVICE. 06-14-00
PER. RAG
REVISED. 06-22-00
LMC | IRS

5
INSTALL DEFECT DETECTOR AT DENNISON

REVISED: 04-30-02 SWE
CSX PROJECT #: IL2001027
WO/AFE NO: A24801
IN SERVICE: 04-30-02
PER: RECORD COPY
SWE | SWE

6 08-01-12 DRB | DBA
PLAN REVISED ACCOUNT OF
INSTALLATION OF FLS & G
AT 2350TH (CLEAR CREEK RD.)

CSX PROJ.NO. IL2012030
CSX OP/AFE NO. IL0375
IN SERVICE. XX-XX-XX
PER. -----
REVISED.

invensys Rail

PROJ #. IL2012030
DES BY. D.BAUMGARTNER
CHK BY. D. ALBRIGHT
DATE. 08-01-12

⊖⊖⊖ = IN

CSX TRANSPORTATION
RAIL TRANSPORT GROUP ENGINEERING
COMMUNICATIONS AND SIGNALS

CP-IU TO WILLOWS

TRACK AND SIGNAL PLAN AT
CP 80, MP. QS-81.60

| DESIGNED | DIGITIZED | CHECKED | DATE |
|---|---|---|---|
| | | | 03-03-86 |

| DRAWING | SHEET NO | NEXT SH | NEXT FILE | NEXT SH | FILE | SHEET |
|---|---|---|---|---|---|---|
| 8406-0816 | 1 | 2 | QS08160 | S01 | QS08160 | I01 |

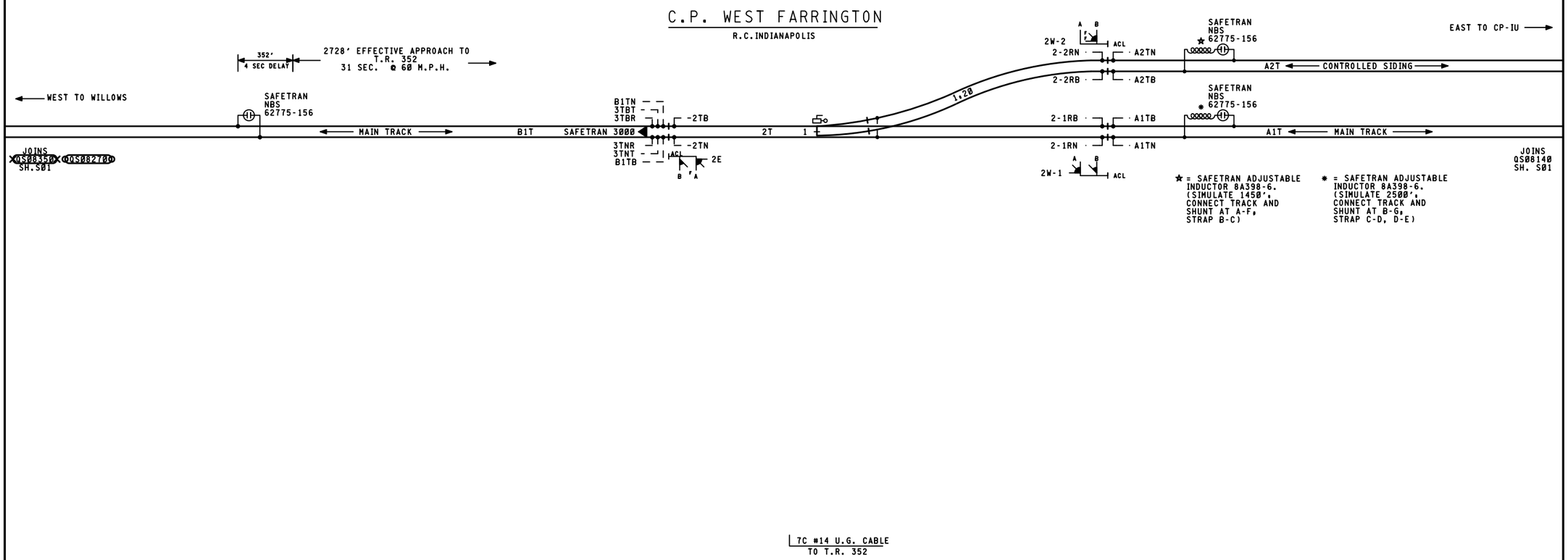


REVISIONS

| | |
|---|---|
| 03-01-00 ABC IL1999055 | |
| 06-22-00 IRS IN1999097 | |
| 04-30-02 SWE | IL2001027 |

invensys Rail

PROJ #: IL2012030
DES BY: D.BAUMGARTNER
CHK BY: D. ALBRIGHT
DATE: 08-01-12

~~OOO~~ = IN
~~XXX~~ = OUT

CSX TRANSPORTATION
RAIL TRANSPORT GROUP ENGINEERING
COMMUNICATIONS AND SIGNALS

CP-IU TO WILLOWS

TRACK AND SIGNAL PLAN AT
CP 80, MP. QS-81.60

| DESIGNED | DIGITIZED | CHECKED | DATE |
|---|---|---|---|
| | | | 03-03-86 |

| DRAWING | SHEET NO | NEXT SH | NEXT FILE | NEXT SH | FILE | SHEET |
|---|---|---|---|---|---|---|
| 8406-0816 | 2 | 3 | QS08160 | C01 | QS08160 | S01 |

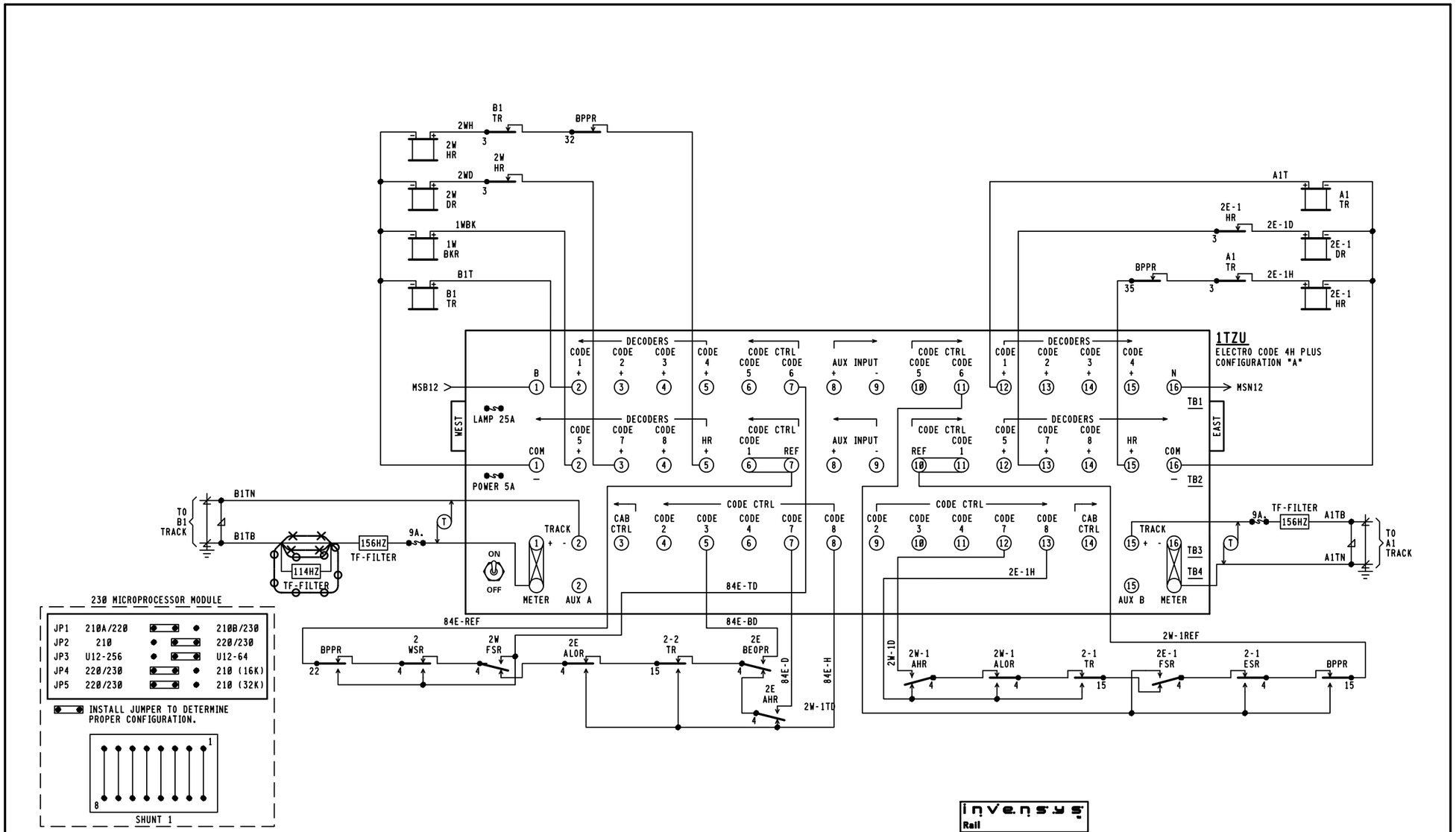


## 230 MICROPROCESSOR MODULE

| | | | |
|---|---|---|---|
| JP1 | 210A/220 | 210B/230 | |
| JP2 | 210 | 220/230 | |
| JP3 | U12-256 | U12-64 | |
| JP4 | 220/230 | 210 (16K) | |
| JP5 | 220/230 | 210 (32K) | |

INSTALL JUMPER TO DETERMINE PROPER CONFIGURATION.

SHUNT 1

## 216B MODULE

215A/B/D — JP1 — 215SC

## 215D MODULE

S1

C1 OR C5 IN → C5 OUT
C5 IN → C5 OUT
C5 OUT ← C1 OR C5 IN
C5 OUT ← C5 IN

JUMPER A B C D

CODE 5 SELECT SWITCHES

## 1TZU

ELECTRO CODE 4H PLUS
CONFIGURATION "A"

FRONT VIEW

TRACK CHOKE 9HP — 211HP RELAY CONVERTER
TRACK CHOKE 9HP — 211HP RELAY CONVERTER

7K TRACK RECEIVER
2R CONVERTER
214 FILTER
215D INPUT INTERFACE
216B TEST/DISPLAY
230 PROCESSOR (210A/220A)
230 PROCESSOR (210B/220B)
212A MAIN CHOPPER CONTROL
217 CODE SELECT
218A RELAY DRIVER
218A RELAY DRIVER
2R CONVERTER
7K TRACK RECEIVER

## CHASSIS I.D. 1235

JUMPERS

EXE. NAME _____ REV. ____
U2 _____ U4 _____
APPL. NAME _____
REV. NO. _____
CS. U1 & U3 _____

invensys Rail

PROJ #, IL2012030
DES BY, D.BAUMGARTNER
CHK BY, D. ALBRIGHT
DATE, 08-01-12

⊖⊖⊖ = IN
⊗⊗⊗ = OUT

| REVISIONS |
|---|
| 06-22-00 IRS IN1999097 |

CSX TRANSPORTATION
RAIL TRANSPORT GROUP ENGINEERING
COMMUNICATIONS AND SIGNALS

STATE LINE TO ST. LOUIS

ELECTROCODE CIRCUITS - E & W MAIN
C.P. 80, MP. QS-81.60

| DESIGNED | DIGITIZED | CHECKED | DATE |
|---|---|---|---|
| SWE | SWE | SWE | 10-22-99 |

| DRAWING | SHEET NO | NEXT SH | NEXT FILE | NEXT SH | FILE | SHEET |
|---|---|---|---|---|---|---|
| 8406-0816 | 3 | 4 | QS08160 | C02 | QS08160 | C01 |

REVISIONS

| | | |
|---|---|---|
| 1 | 04-30-02 SWF | IL2001027 |
| 2 | | IL2012030 |

# INDEX


| SH. NO. | CONTENTS | REVISION NO. 1 | 2 | 3 | 4 | 5 | 6 | 7 |
|---|---|---|---|---|---|---|---|---|
| 1 | TITLE, NOTES, INDEX AND LOCATION PLAN | X | ⊘ | | | | | |
| 2 | LOCATION PLAN | X | ⊘ | | | | | |
| 3 | TRACK AND CONDUIT LAYOUT | X | | | | | | |
| 4 | POWER DISTRIBUTION | X | | | | | | |
| 5 | COMMUNICATION AND DATAPROBE CIRCUITS | X | | | | | | |
| 6 | EPIC III, DED, TEST, COR, PTT AND RADIO CIRCUITS | X | | | | | | |
| 7 | SURGE PROTECTION AND CALBE TERMINATIONS | X | | | | | | |
| 8 | RIGHT, LEFT & REAR WALL LAYOUT | X | | | | | | |
| 9 | GROUND APPLICATION FOR HBD HOUSE | X | | | | | | |
| 10 | HOUSE LAYOUT | X | | | | | | |


⊘ = PLANS SENT TO FIELD (DISTRIBUTED)

X = PLANS AS-IN-SERVICED (UP TO DATE)

## NOTES

▭ = FOR MATERIAL REFERENCE SEE PLAN S-1002

⊗ = DENOTES TWISTED PAIR

GROUND IN ACCORDANCE WITH CS-9001-A

invensys Rail

PROJ #: IL2012030
DES BY: D.BAUMGARTNER
CHK BY: D. ALBRIGHT
DATE: 08-01-12

⊖⊖⊖ = IN

CSX TRANSPORTATION

RAIL TRANSPORT GROUP ENGINEERING
COMMUNICATIONS AND SIGNALS

CP-IU TO WILLOWS
DENNISON, IL
TITLE, NOTES, INDEX AND REVISIONS
DEFECT DETECTOR, MP.QS-83.50

| DESIGNED | DIGITIZED | CHECKED | DATE |
|---|---|---|---|
| | | | 10-17-01 |

| DRAWING | SHEET NO | NEXT SH | NEXT FILE | NEXT SH | FILE | SHEET |
|---|---|---|---|---|---|---|
| 8406-0834 | 1 | 2 | QS08350 | S01 | QS08350 | I01 |

1TCONHWD.I01
10-16-01

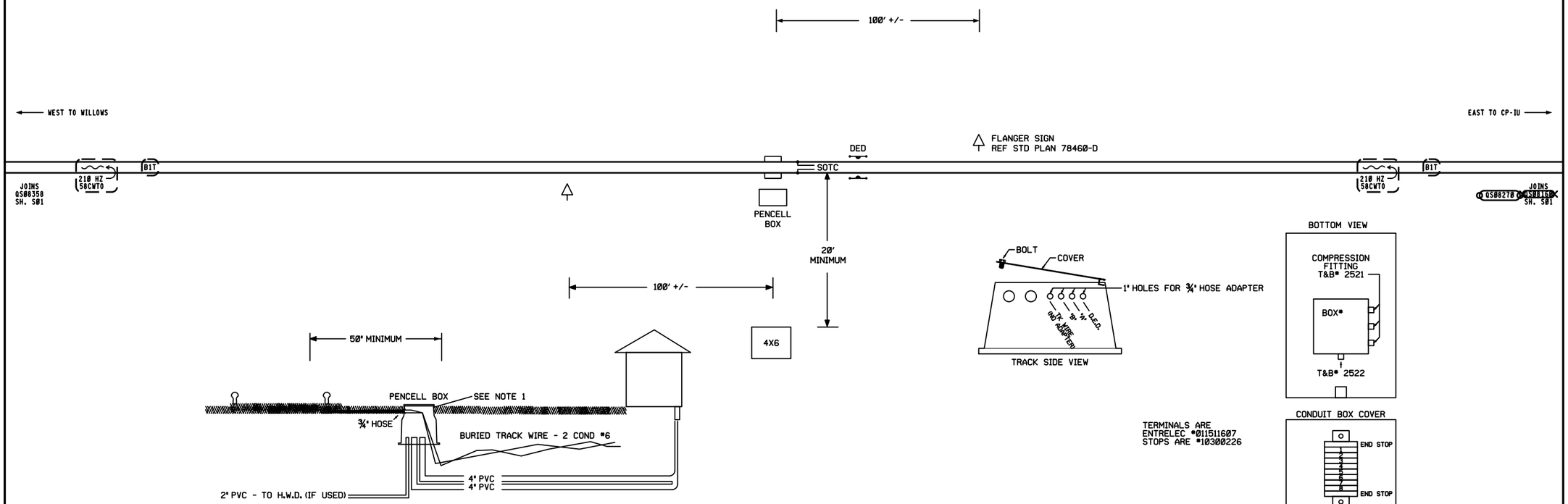


TERMINALS ARE
ENTRELEC #011511607
STOPS ARE #10300226

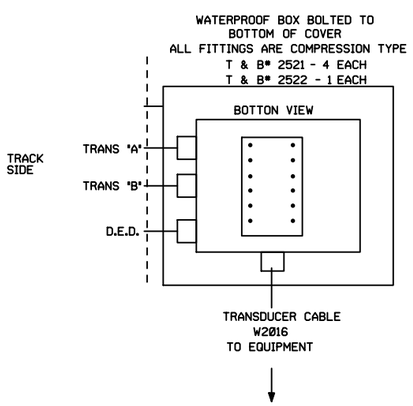


NOTES:
1. PENCELL BOX LOCATED 50' (MINIMUM) FROM GAGE.
2. ALL PVC JOINTS MUST BE CLEANED AND GLUED UNLESS OTHERWISE NOTED.
3. H.W.D. CONDUIT AND RISER ARE 2" PVC.
4. H.W.D. RISER LOCATED 52" FROM SCANNER CENTERLINE AND 52" FROM GAGE.
5. TO MAKE 90 DEGREE CORNER, USE SWEEP "L" OR TWO 45 DEGREE ELBOWS CONNECTED BY A SHORT PIECE OF PIPE.
6. 20 FEET MINIMUM CLEARENCE TO HOUSE
   40 FEET MAXIMUM CLEARENCE TO HOUSE
   200 FEET MINIMUM TO ANY ROAD CROSSING.
7. D.E.D. CABLE ,S/O CABLE AND TRANSDUCER CABLE ARE PAIRED IN SEPERATE 3/4" RUBBER HOSES.
8. TRACK WIRE FOR S.O.T.C. IS DIRECT BURIED FROM HOUSE TO PENCELL BOX.
9. INSTALL REFERENCE TIE ON EDGE TO ALLOW SCANNER ADJUSTMENT. REFERENCE TIE SHOULD BE CLEAR OF JOINTS SO SCANNER CAN BE MOUNTED WITHOUT ANY OBSTRUCTIONS.
10. LOCATION MUST BE APPROVED BY DIVISION TRANSPORTATION.
11. PENCELL BOX LOCATED 50' MINIMUM FROM GAGE WITH TOP OF PENCELL BOX AT BALAST LINE.
12. D.E.D. CABLE TO ENTER PENCELL BOX USING SHORT PIECE OF S/O CABLE. USE X1 AND X2 WIRES TO HOUSE.
13. D.E.D. LOCATED WITHIN 9' OF SCANNER USING 9' TIMBERS, SEE CS1531.
14. HBD SCANNER PROTECTION RAMPS AND FLANGER SIGNS TO BE INSTALLED IN ACCORDANCE WITH STANDARD PLAN CS-1502 AND MW 78460-D.
    SCANNERS ARE NOT TO BE INSTALLED WITHOUT THIS PROTECTION.
15. ALL TRANSDUCER MEASUREMENTS ARE TO THE MAGNETIC CENTER.
16. DIRECTION 1 IS PREDOMINATE DIRECTION OF TRAFFIC.
17. PVC MAINS TO BE CAPPED - NOT GLUED.
18. PULL LINES TO BE INSTALLED IN ALL PVC RUNS.
19. PENCELL BOX AND PVC RUNS ARE TO BE BACK FILLED WITH 6" OF WASHED STONE FOR DRAINAGE.
20. REMOVE ANY ANTI CREEP DEVICES FROM BOTH SIDES OF THE REFERENCE TIE, REMOVE ALL SPIKES FROM INTENDED SCANNER LOCATION. SPIKES REMAIN IN THE TIE PLATES BETWEEN THE RAILS.

REVISIONS

| | |
|---|---|
| 04-30-02 SWE | IL2001027 |

Invensys Rail

PROJ #. IL2012030
DES BY. D.BAUMGARTNER
CHK BY. D. ALBRIGHT
DATE. 08-01-12

~~OOO~~ = IN
~~XXX~~ = OUT
( ) = EXISTING

CSX TRANSPORTATION
RAIL TRANSPORT GROUP ENGINEERING
COMMUNICATIONS AND SIGNALS

CP-IU TO WILLOWS
DENNISON, IL
LOCATION PLAN
DEFECT DETECTOR, MP.QS-83.50

| DESIGNED | DIGITIZED | CHECKED | DATE |
|---|---|---|---|
| | | | 10-17-01 |

| DRAWING | SHEET NO | NEXT SH | NEXT FILE | NEXT SH | FILE | SHEET |
|---|---|---|---|---|---|---|
| 8406-0834 | 2 | 3 | QS08350 | G01 | QS08350 | S01 |

# INDEX

| SH. NO. | CONTENTS | REVISION NO. 1 | 2 | 3 | 4 | 5 | 6 | 7 |
|---|---|---|---|---|---|---|---|---|
| 1 | TITLE, NOTES, INDEX AND REVISIONS | ✓ | ✓ | ✓ | ✓ | ✓ | ⊘ | |
| 2 | LOCATION PLAN | ✓ | | ✓ | | ✓ | ⊘ | |
| 3 | TRACK AND POWER DISTRIBUTION CIRCUITS | ✓ | ✓ | | ✓ | | | |
| 4 | MOTION SENSOR CIRCUITS - HARMON PMD-1 | ✓ | ✓ | | ✓ | | | |
| 5 | LIGHTING CIRCUITS | ✓ | | | | | | |
| 6 | ELECTROCODE CIRCUITS | | | | ✓ | ✓ | ⊘ | |
| 7 | | | | | | | | |
| 8 | | | | | | | | |
| 9 | | | | | | | | |
| 10 | | | | | | | | |

# NOTES

▭ = FOR MATERIAL REFERENCE SEE PLAN S-1002

⊗ = DENOTES TWISTED PAIR GROUND IN ACCORDANCE WITH CS-9001-A

## REVISIONS

**1** 1-28-86 — FCH | WRG | ELE

PLAN REDRAWN ACCOUNT TCS
TERRE HAUTE TO EAST ST. LOUIS
EQUIPMENT FROM PLAN 8406-0827
MOVED TO THIS LOCATION.
PLAN LAST A.I.S. , 10-26-79
SYSTEM FILE NO.
WO/AFE NO. JW-347 PFC NO.2
IN SERVICE. 8-25-87
PER. JED

DDD | MAW
DIVISION

**2** 12-1-94

PLAN REVISED ACCOUNT
TO SHOW ADDITION OF
LIGHTNING PROTECTION.
IN SERVICE.12-1-94
PER.JED

VAM | CED

**3** 12-2-96 — DMR | SX3 | HII

PLAN REVISED ACCOUNT
OF WARNING DEVICES ADDED
AT T.R. 67 (McKEEN ROAD)
WO/AFE NO. 48748
IN SERVICE. 12-3-99
PER. R.A.G.
REVISED. 03-01-00

VJR | ABC

**4** 10-22-99 — SWE | SWE | SWE

PLAN REVISED ACCOUNT OF
TERRE HAUTE - REPLACE
MICROCODE WITH EC4.
CSX PROJ.NO. IN1999097
CSX OP/AFE NO. A24513
IN SERVICE. 06-14-00
PER. RAG
REVISED. 06-22-00

LMC | IRS

**5**

INSTALL DEFECT DETECTOR AT DENNISON
REVISED: 04-30-02 SWE
CSX PROJECT #: IL2001027
WO/AFE NO: A24801
IN SERVICE: 04-30-02
PER: RECORD COPY

SWE | SWE

**6** 08-01-12 — DRB | DBA

ADD TRACK FILTER ACCOUNT OF
WARNING DEVICES ADDED AT
2350TH ST.(CLEAR CREEK RD.)
REVISED:
CSX PROJECT #: IL2012030
WO/AFE NO: IL0375
IN SERVICE:
PER:

invensys Rail

PROJ #. IL2012030
DES BY. D.BAUMGARTNER
CHK BY. D. ALBRIGHT
DATE. 08-01-12

⊖⊖⊖ = IN

CSX TRANSPORTATION
RAIL TRANSPORT GROUP ENGINEERING
COMMUNICATIONS AND SIGNALS

CP-IU TO WILLOWS
DENNISON, IL
TRACK AND SIGNAL PLAN AT
DENNISON RD., 546 329W, MP. QS-83.58

| DESIGNED | DIGITIZED | CHECKED | DATE |
|---|---|---|---|
| | | | 01-28-86 |

| DRAWING | SHEET NO | NEXT SH | NEXT FILE | NEXT SH | FILE | SHEET |
|---|---|---|---|---|---|---|
| 8406-0835 | 1 | 2 | QS08358 | S01 | QS08358 | I01 |

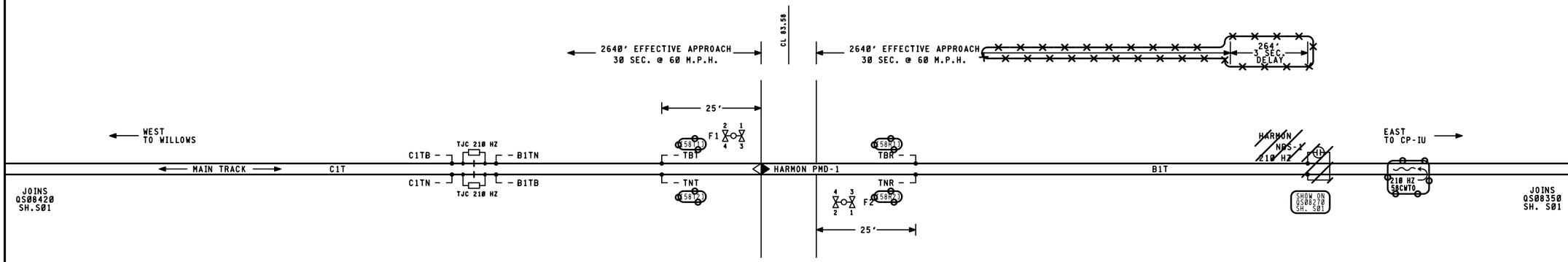


# DENNISON ROAD

WARNING DEVICES TO BE INSTALLED IN
ACCORDANCE WITH THE M.U.T.C.D.
AAR/DOT # 546329W

NOTE, BRACKETING DENOTE TAGGING ONLY

= IN

= OUT

= NOTE

= SHOWN ELSEWHERE

Invensys Rail

PROJ #: IL2012030
DES BY: D.BAUMGARTNER
CHK BY: D. ALBRIGHT
DATE: 08-01-12

REVISIONS

| | |
|---|---|
| 03-01-00 ABC IL1999054 | |
| 04-30-02 SWE | IL2001027 |

The operation of any circuits and equipment shown herein must be checked by point to point breakdown and complete operational testing of the system (or sections of the system) into which they are connected.

CSX TRANSPORTATION

RAIL TRANSPORT GROUP ENGINEERING
COMMUNICATIONS AND SIGNALS

CP-IU TO WILLOWS
DENNISON, IL
TRACK AND SIGNAL PLAN AT
DENNISON RD., 546 329W, MP. QS-83.58

| DESIGNED | DIGITIZED | CHECKED | DATE |
|---|---|---|---|
| | | | |

| DRAWING | SHEET NO | NEXT SH | NEXT FILE | NEXT SH | FILE | SHEET |
|---|---|---|---|---|---|---|
| 8406-0835 | 2 | 3 | QS08358 | E01 | QS08358 | S01 |

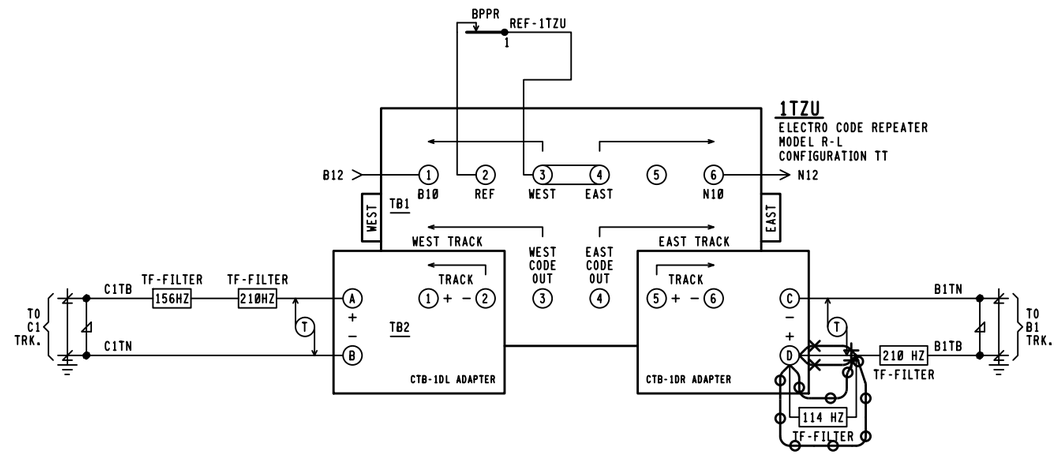


invensys Rail

PROJ #. IL2012030
DES BY. D.BAUMGARTNER
CHK BY. D. ALBRIGHT
DATE. 08-01-12

~~OOO~~ = IN
~~XXX~~ = OUT

ELECTRO CODE CASE

| REVISIONS | |
|---|---|
| 06-22-00 IRS IN1999097 | |
| 04-30-02 SWE | IL2001027 |

CSX TRANSPORTATION
RAIL TRANSPORT GROUP ENGINEERING
COMMUNICATIONS AND SIGNALS

CP-IU TO WILLOWS

ELECTROCODE CIRCUITS
REPEATING CUT LOCATION, MP. QS-83.50

| DESIGNED | DIGITIZED | CHECKED | DATE |
|---|---|---|---|
| SWE | SWE | SWE | 10-22-99 |

| DRAWING | SHEET NO | NEXT SH | NEXT FILE | NEXT SH | FILE | SHEET |
|---|---|---|---|---|---|---|
| 8406-0835 | 6 | | QS08350 | I01 | QS08358 | C03 |