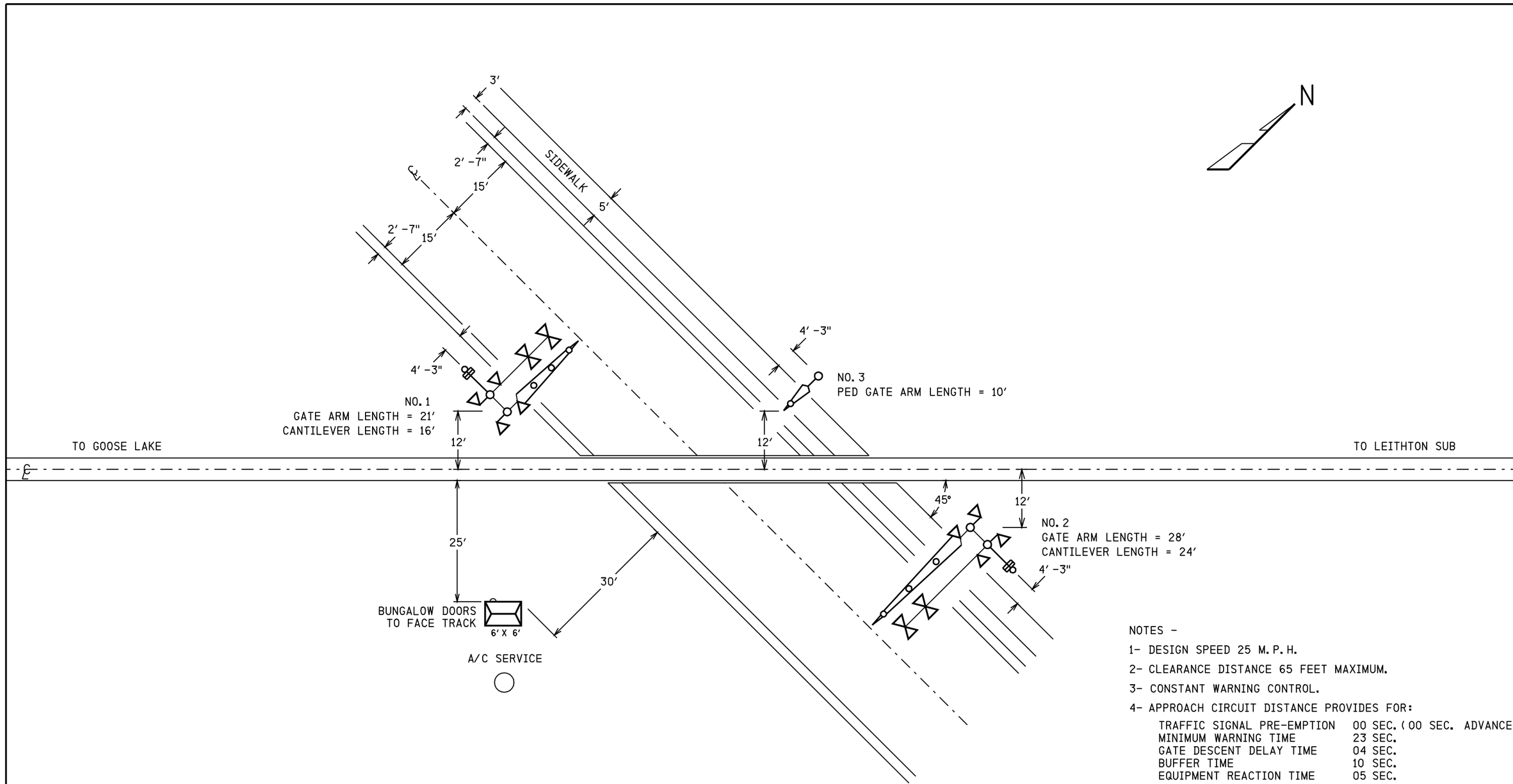

NOTES -

1- DESIGN SPEED 25 M.P.H.

2- CLEARANCE DISTANCE 65 FEET MAXIMUM.

3- CONSTANT WARNING CONTROL.

4- APPROACH CIRCUIT DISTANCE PROVIDES FOR:

TRAFFIC SIGNAL PRE-EMPTION	00 SEC. (00 SEC. ADVANCE)
MINIMUM WARNING TIME	23 SEC.
GATE DESCENT DELAY TIME	04 SEC.
BUFFER TIME	10 SEC.
EQUIPMENT REACTION TIME	05 SEC.

IRC 01 MAY 2012

PROPOSED
DESIGN NO. 10-0222
RED-IN YELLOW-OUT

AS INSTALLED
DATE _____
BY _____
(PRINT NAME)

PROPOSED D	M	Y	REVISIONS	D	C	COMPLETED D	M	Y	C

REGION SOUTHERN
SUB. IL RIVER 335

SIGNALS AND COMMUNICATIONS HOMEWOOD
01 MAY 2012

DES. KLT
CH. BJW

SITUATION SKETCH
SCALE 1" = 20′
PLAINFIELD, IL

RENWICK ROAD

ILR-011.87-0

DOT# 261 003P

16

INVENSYS RAIL CORP.
LOUISVILLE DIVISION, LOUISVILLE, KY

ilr-011.87-0.dgn
27-AUG-2012

REVISIONS				
NO.	DATE	BY	DESCRIPTION	APP. BY
1				
2				
3				
4				
5				

FLASHING LIGHT UNITS ALIGNMENT TABLE

PRIMARY FRONT LIGHTS FOR VEHICLES							
SIG #	LIGHT #	ROUNDEL		ROAD SPEED	MINIMUM DISTANCE	RECOMMENDED DISTANCE	ALIGNMENT DISTANCE
		SIZE	TYPE	MPH	FT	FT	FT
1	1,2	12"	LED	40	390	650	
2	7,8	12"	LED	40	390	650	
1	15,16	12"	LED	40	390	650	
2	21,22	12"	LED	40	390	650	
BACK LIGHTS FOR VEHICLES							
SIG #	LIGHT #	ROUNDEL		ROAD SPEED	MINIMUM DISTANCE	RECOMMENDED DISTANCE	ALIGNMENT DISTANCE
		SIZE	TYPE	MPH	FT	FT	FT
1	3,4	12"	LED	N/A	N/A	N/A	50
2	5,6	12"	LED	N/A	N/A	N/A	50
1	17,18	12"	LED	N/A	N/A	N/A	50
2	19,20	12"	LED	N/A	N/A	N/A	50

NOTE:
FIELD IS TO PROVIDE THE ACTUAL ALIGNMENT DISTANCE AS DETERMINED BY
SCP-706: ROAD CROSSING DEVICE LIGHT UNIT ALIGNMENT PROCEDURES

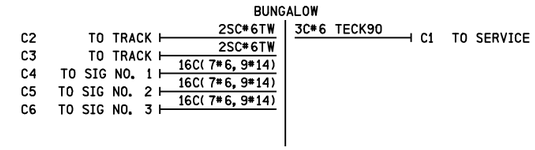

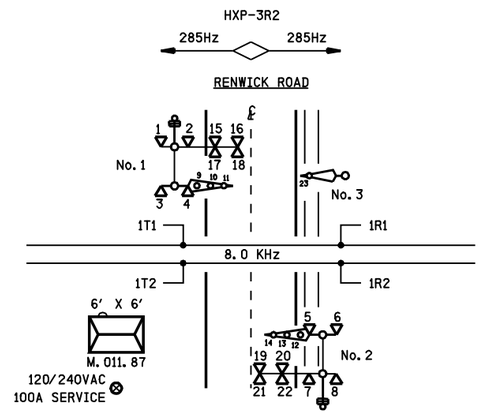

CONTENT	SHEET #
SITUATION SKETCH	00
TRACK LAYOUT	01
HXP-3R2 WIRING DIAGRAM	02
HXP-3R2 PROGRAM CONFIGURATION	03
HIGHWAY CROSSING ANALYZER HCA-1	04
RTU CIRCUITS	05
SSCC3+ WITH ISOLATED GATE CROSSING CONTROLLER 40 AMP	06
SSCCIII+ PROGRAM DATA	07
GATE 1 MECHANISM CONTROL CIRCUITS SAFETRAN S-60	08
GATE 2 MECHANISM CONTROL CIRCUITS SAFETRAN S-60	09
GATE 3 MECHANISM CONTROL CIRCUITS SAFETRAN S-60	10
DC DISTRIBUTION	11
AC DISTRIBUTION	12
BUNGALOW LAYOUT TOP VIEW	13
BUNGALOW LAYOUT SIDE D & L.I.G.P.	14
BUNGALOW LAYOUT SIDES A, B & C	15

ILR-011.87-01.dgn
27-AUG-2012

IRC 01 MAY 2012

PROPOSED
DESIGN NO. 10-0222
RED-IN YELLOW-OUT

AS INSTALLED
DATE _____
BY _____
(PRINT NAME)

PROPOSED			REVISIONS	D	C	COMPLETED			C
D	M	Y				D	M	Y	

REGION SOUTHERN
SUB. IL RIVER 335

SIGNALS AND COMMUNICATIONS HOMEWOOD
01 MAY 2012
DES. SIA
CH. BJW

TRACK LAYOUT

PLAINFIELD, IL
RENWICK ROAD

ILR-011.87-01

DOT# 261 003P

INVENSYS RAIL CORPORATION

DES.: SIA	DATE: 01-05-12	JOB NO.: PICA10358	
CKD.: BJW	ISSUE DATE: N/A	EST. NO.: XP-6340	
DRN.: SIA	PLAN NO.: N/A	SHEET 1 OF 15	
P TIME: 10:04	P DATE: $$PLOT_DATE	CAD ID.: ILR-011.87-01	

INVENSYS RAIL CORP.
LOUISVILLE DIVISION, LOUISVILLE, KY

REVISIONS				
NO.	DATE	BY	DESCRIPTION	APP. BY
1	25-04-12	APL	REVISED PER CN	MRB
2				
3				
4				
5				

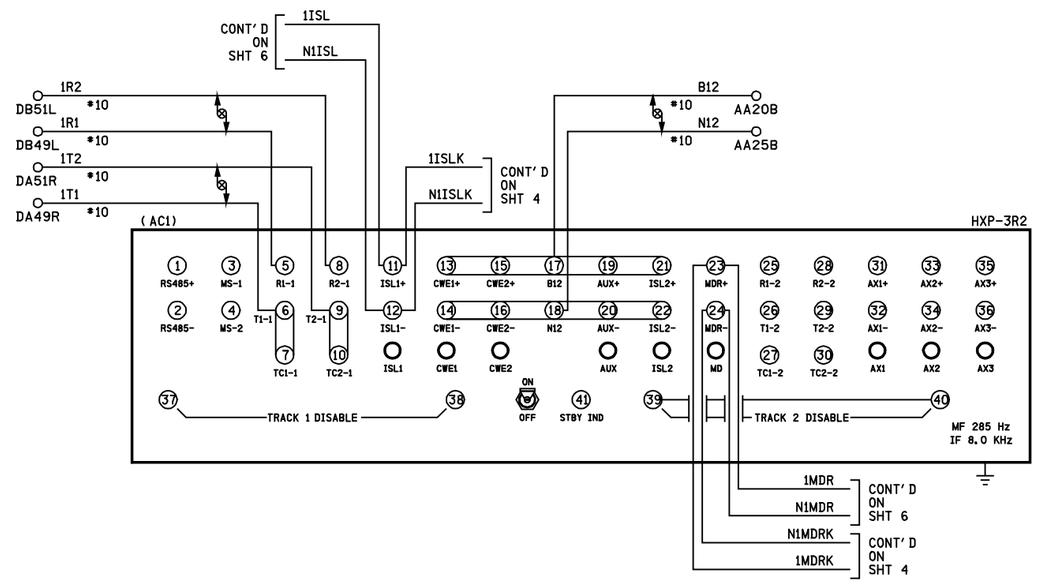

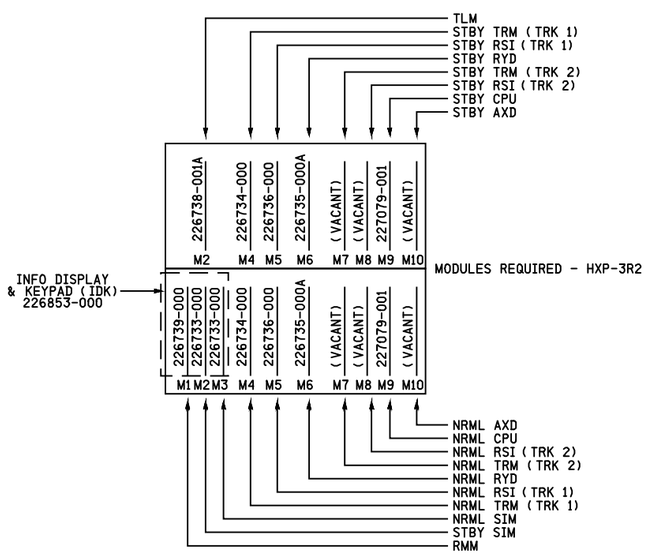

NOTES

1) ALL WIRING #16 AWG UNLESS OTHERWISE NOTED.

2) DENOTES TWISTED PAIR.

IRC 01 MAY 2012

PROPOSED
DESIGN NO. 10-0222
RED-IN YELLOW-OUT

AS INSTALLED
DATE _____
BY _____
(PRINT NAME)

PROPOSED			REVISIONS	D	C	COMPLETED			C
D	M	Y				D	M	Y	

REGION SOUTHERN
SUB. IL RIVER 335

SIGNALS AND COMMUNICATIONS HOMEWOOD
01 MAY 2012
DES. SIA
CH. BJW

HXP-3R2
WIRING DIAGRAM
PLAINFIELD, IL
RENWICK ROAD

ILR-011.87-02

DOT# 261 003P

INVENSYS RAIL CORPORATION

DES.: SIA	DATE: 01-05-12	JOB NO.: PICA10358	
CKD.: BJW	ISSUE DATE: N/A	EST. NO.: XP-6340	
DRN.: SIA	PLAN NO.: N/A	SHEET 2 OF 15	
P TIME: 10:04	P DATE: $$PLOT_DATE	CAD ID.: ILR-011.87-02	

INVENSYS RAIL CORP.
LOUISVILLE DIVISION, LOUISVILLE, KY

ilr-011.87-02.dgn
27-AUG-2012

REVISIONS				
NO.	DATE	BY	DESCRIPTION	APP. BY
1				
2				
3				
4				
5				

UNIT #1 — Grade Crossing Location Record

Cabinet Number (Option 90) _____

Location RENWICK ROAD Milepost 011.87 DOT 261 003P Date 01 / 05 / 12

Operating Program HPN _____ Version XXXXX

System Monitor Program HPN _____ Version _____

Hardware Settings

Track 1 Master [X] Slave [ ] 4 kHz [ ] 8 kHz [X]

LOS Jumper 0 [ ] 1 [X] 2 [ ] Fault Jumper 0 [ ] 1 [ ]

Approach configuration switch position: Normal [X] Short [ ] Very Short [ ]

Track 2 Master [ ] Slave [ ] 4 kHz [ ] 8 kHz [ ]

LOS Jumper 0 [ ] 1 [ ] 2 [ ] Fault Jumper 0 [ ] 1 [ ]

Approach configuration switch position: Normal [ ] Short [ ] Very Short [ ]

TLM MODULE SETTINGS

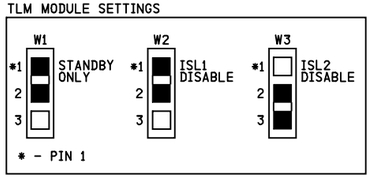

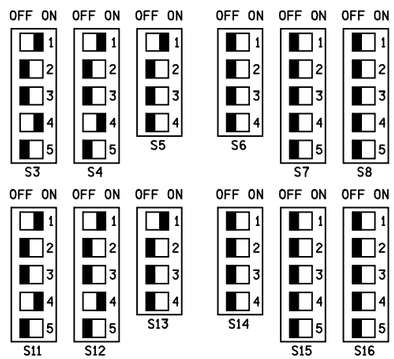

Adjust Select Adjustments

No.	Adjustment	Default	Range	Track 1	Track 2
1	Approach Length	9,999	0 - 9,999	1400 feet	feet
2	Warning Time	99	23 - 99	30 seconds	seconds
3	LIA	0	-9 to +9	steps	steps
4	TC (1 step = 32)	395	430 - 470	steps	steps
5	MD Restart	99%	0 - 99%	RX	RX

Option Adjustments

No.	Adjustment	Default	Range	Track 1	Track 2
0	RX	0	1-100		
1	TK-ENA	UP	UP or dn	UP [X] dn [ ]	UP [ ] dn [ ]
2	TK FO	0	0 - 9999	285 Hz	Hz
3	CW/MD	d	C to d	C [X] d [ ]	C [ ] d [ ]
4	UNI-BI	b	U - b	U [ ] b [X]	U [ ] b [ ]
5	NBS-C	0	0 - 99	99 RX	RX
		9,999	RX dependant	XXXX feet	XXXX feet
6	CWEWT	80	0 - 99	80 seconds	seconds
7	LOS	16	4 - 99	30 seconds	seconds
8	IJ-LOS	5	3 - 99	5 seconds	seconds
9	BC	frequency dependant	50 -250	XXX	XXX
10	P-COMP	0	0 - 10	XX degrees	XX degrees

HXP-3, HXP-3R, HXP-3R2

AX Adjustment Options

	Default	Range	Option 11 - AX1	Option 12 - AX2	Option 13 - AX3
TK-ASN		1, 2, Both	1 [ ] 2 [ ] Both [ ]	1 [ ] 2 [ ] Both [ ]	1 [ ] 2 [ ] Both [ ]
OF-TK1	0	0 - 9,999	N/A feet	N/A feet	N/A feet
OF-TK2	0	0 - 9,999	N/A feet	N/A feet	N/A feet
WT	99	23 - 99	N/A seconds	N/A seconds	N/A seconds
MD-RST	99	0 - 99%	N/A RX	N/A RX	N/A RX
CW/MD	d	C or d	C [ ] d [ ]	C [ ] d [ ]	C [ ] d [ ]
CJ-LOS	0	3 - 99	N/A seconds	N/A seconds	N/A seconds
PJ-DET	15	4 - 15	N/A seconds	N/A seconds	N/A seconds
POS-ST	dn	UP or dn	UP [ ] dn [ ]	UP [ ] dn [ ]	UP [ ] dn [ ]

No.	Adjustment	Default	Range	Track 1	Track 2
17	MDR-AX	n*	n or A	n [X] A [ ]	n [ ] A [ ]
	OF-TK1	0	0 - 9,999	N/A feet	
	OF-TK2	0	0 - 9,999		N/A feet
	CJ-LOS	0	3 - 99	N/A seconds	N/A seconds
	PJ-DET	15	4 - 15	N/A seconds	N/A seconds
18	MD-TMR	10	10-99 (0=disable)	N/A minutes	N/A minutes
19	MIN-WT	0	23-99 (0=disable)	N/A seconds	N/A seconds
20	FS-DET	0	10-30 (0=disable)	N/A minutes	N/A minutes
21	POS-RX	0	0 - 74 (0=disable)	N/A RX	N/A RX
	POS-TM	0	0 - 99**	N/A minutes	N/A minutes
22	AR-TMR	0	0-80 (0=disable)	N/A minutes	N/A minutes
47	ATO-RX	dn	UP or dn	UP [ ] dn [ ]	UP [ ] dn [ ]
48	PF-ENA	UP	UP or dn	UP [ ] dn [ ]	UP [ ] dn [ ]

***n = not an AX drive (no options available)**
****0 = disable, 99 = continuous**

Shunt Record

West Approach		No Shunt RX	No Shunt Phase	100% Shunt RX	100% Shunt Phase	50% Shunt	50% Shunt RX	50% Shunt Phase	LIA Added % 1 to 9
Track 1	Normal								
	Standby								
Track 2	Normal	N/A	N/A	N/A	N/A	N/A	N/A	N/A	N/A
	Standby	N/A	N/A	N/A	N/A	N/A	N/A	N/A	N/A
East Approach									
Track 1	Normal								
	Standby								
Track 2	Normal	N/A	N/A	N/A	N/A	N/A	N/A	N/A	N/A
	Standby	N/A	N/A	N/A	N/A	N/A	N/A	N/A	N/A

IRC 01 MAY 2012

PROPOSED
DESIGN NO. 10-0222
RED-IN YELLOW-OUT

AS INSTALLED
DATE _____
BY _____
(PRINT NAME)

PROPOSED D	M	Y	REVISIONS	D	C	COMPLETED D	M	Y	C

REGION SOUTHERN
SUB. IL RIVER 335
CN

SIGNALS AND COMMUNICATIONS HOMEWOOD — DES. SIA
01 MAY 2012 — CH. BJW

HXP-3R2
PROGRAM CONFIGURATION
PLAINFIELD, IL
RENWICK ROAD

ILR-011.87-03

DOT# 261 003P

INVENSYS RAIL CORPORATION
DES.: SIA DATE: 01-05-12 JOB NO.: PICA10358
CKD.: BJW ISSUE DATE: N/A EST. NO.: XP-6340
DRN.: SIA PLAN NO.: N/A SHEET 3 OF 15
P TIME: 10:04 P DATE: $$PLOT_DATE CAD ID.: ILR-011.87-03

INVENSYS RAIL CORP.
LOUISVILLE DIVISION, LOUISVILLE, KY

ilr-011.87-03.dgn
27-AUG-2012

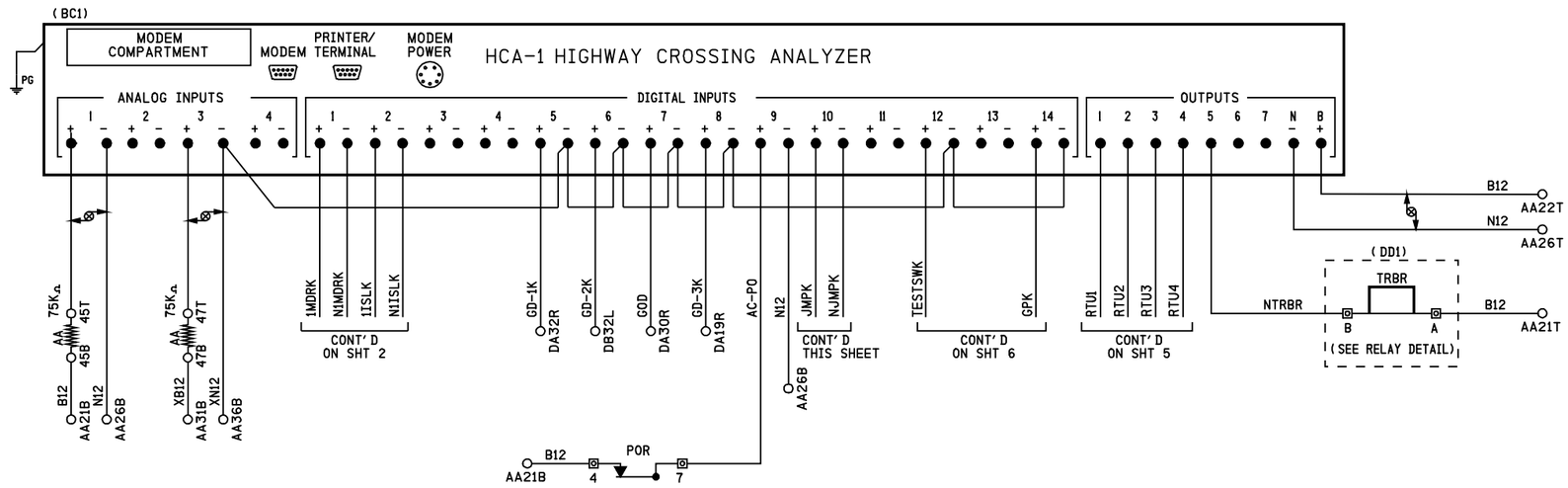

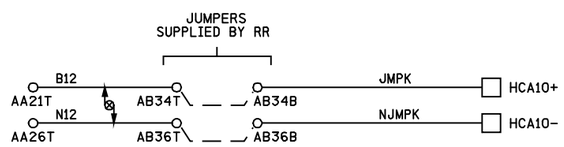

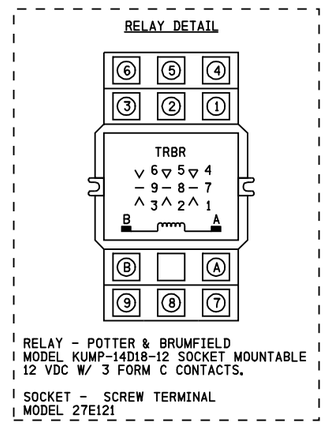

NOTES

1) ALL WIRING #16 AWG UNLESS OTHERWISE NOTED.

2) DENOTES TWISTED PAIR.

IRC 01 MAY 2012

PROPOSED
DESIGN NO. 10-0222
RED-IN YELLOW-OUT

AS INSTALLED
DATE
BY
(PRINT NAME)

PROPOSED D	M	Y	REVISIONS	D	C	COMPLETED D	M	Y	C

REGION SOUTHERN
SUB. IL RIVER 335

SIGNALS AND COMMUNICATIONS HOMEWOOD
01 MAY 2012
DES. SIA
CH. BJW

HIGHWAY CROSSING ANALYZER
HCA-1
PLAINFIELD, IL
RENWICK ROAD

ILR-011.87-04

DOT# 261 003P

INVENSYS RAIL CORPORATION

DES. : SIA	DATE: 01-05-12	JOB NO. : PICA10358	
CKD. : BJW	ISSUE DATE: N/A	EST. NO. : XP-6340	
DRN. : SIA	PLAN NO. : N/A	SHEET 4 OF 15	
P TIME: 10:04	P DATE: $$PLOT_DATE	CAD ID. : ILR-011.87-04	

INVENSYS RAIL CORP.
LOUISVILLE DIVISION, LOUISVILLE, KY

REVISIONS

NO.	DATE	BY	DESCRIPTION	APP. BY
1				
2				
3				
4				
5				

ilr-011.87-04.dgn
27-AUG-2012

REVISIONS				
NO.	DATE	BY	DESCRIPTION	APP. BY
1				
2				
3				
4				
5				

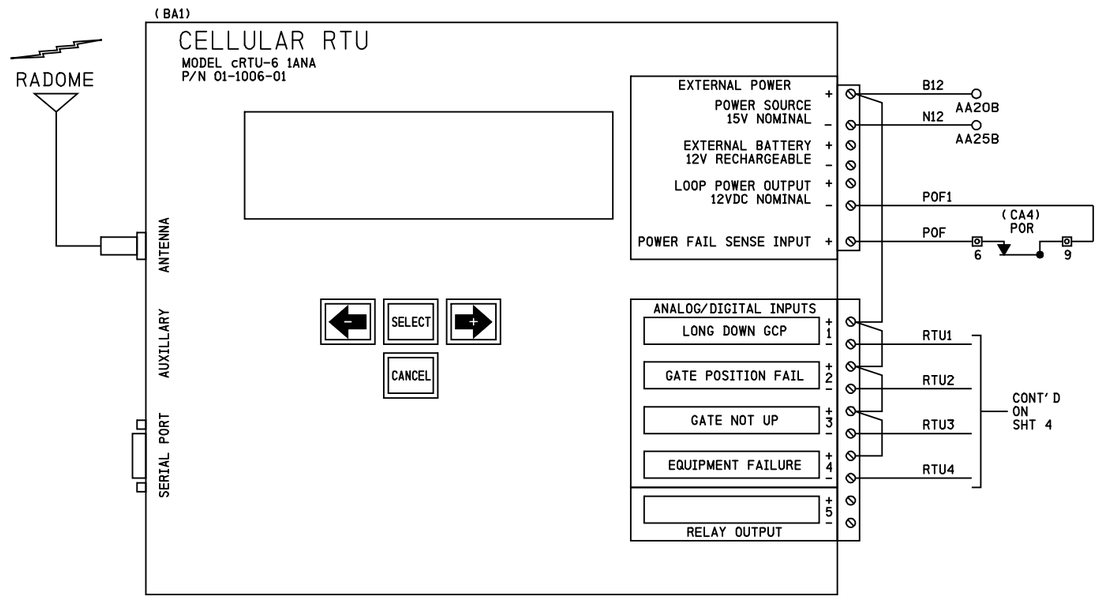

CONFIGKEY:	30
MODEL:	C06C/2ANA V2.3
SERIAL #:	
SITE IDENTIFIER:	DOT# 261 003P

* FIELD TO PROVIDE SERIAL *

	LOW ALARM	RETURN	HIGH ALARM	RETURN
B12	11.6	12.6	15.6	14.6
XB12	13.8	14.8	17.8	16.8

NOTE

1) ALL WIRING #16 AWG UNLESS OTHERWISE NOTED.

IRC 01 MAY 2012

PROPOSED
DESIGN NO. 10-0222
RED-IN YELLOW-OUT

AS INSTALLED
DATE _____
BY _____
(PRINT NAME)

PROPOSED D	M	Y	REVISIONS	D	C	COMPLETED D	M	Y	C

REGION SOUTHERN
SUB. IL RIVER 335

SIGNALS AND COMMUNICATIONS HOMEWOOD
01 MAY 2012
DES. SIA
CH. BJW

RTU CIRCUITS

PLAINFIELD, IL
RENWICK ROAD

ILR-011.87-05

DOT# 261 003P

INVENSYS RAIL CORPORATION		
DES.: SIA	DATE: 01-05-12	JOB NO.: PICAI0358
CKD.: BJW	ISSUE DATE: N/A	EST. NO.: XP-6340
DRN.: SIA	PLAN NO.: N/A	SHEET 5 OF 15
P TIME: 10:04	P DATE: $$PLOT_DATE	CAD ID.: ILR-011.87-05

INVENSYS RAIL CORP.
LOUISVILLE DIVISION, LOUISVILLE, KY

ilr-011.87-05.dgn
27-AUG-2012

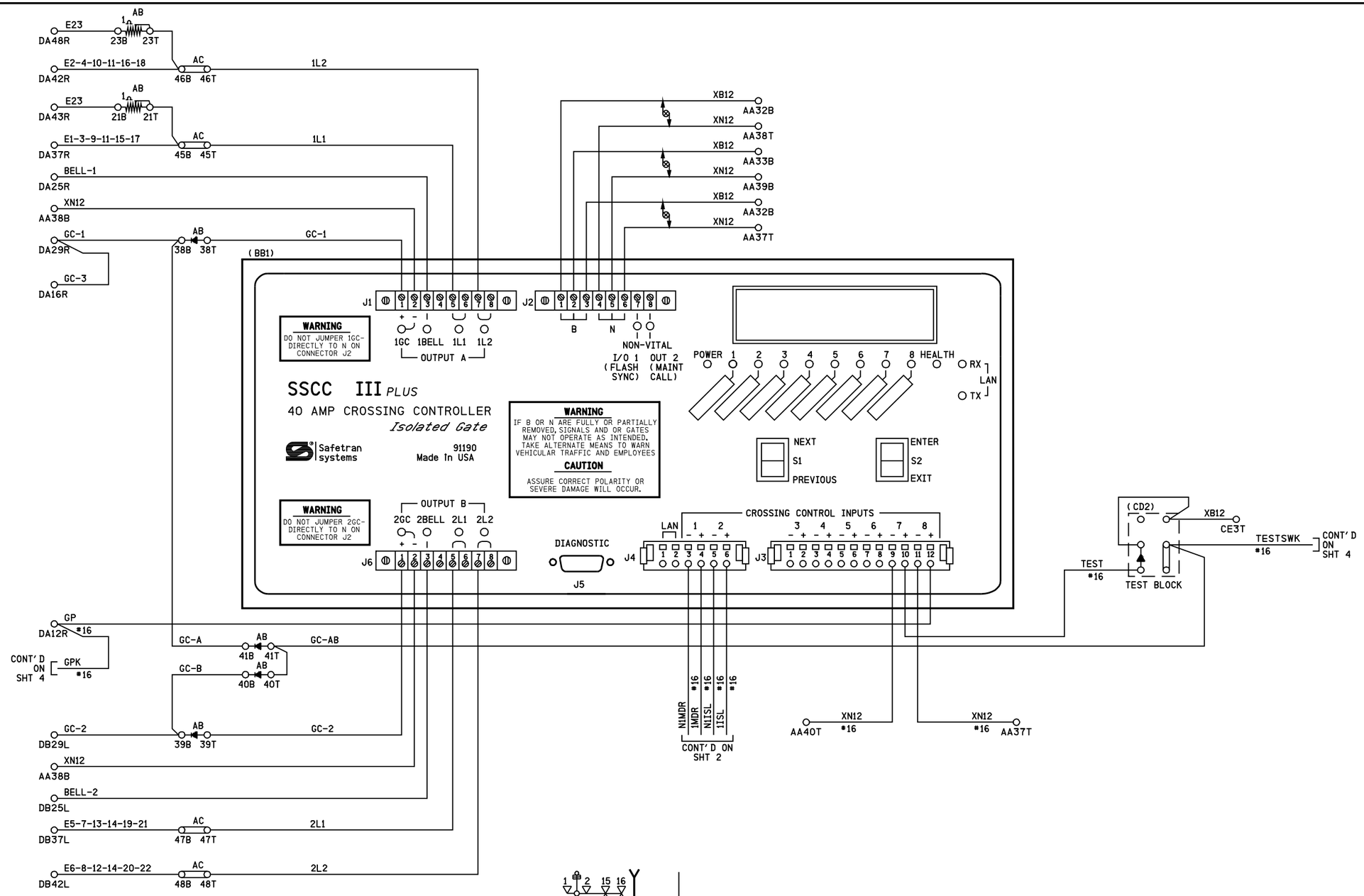

NOTES

1) DENOTES RECTIFIER : (SAFETRAN #8008A299006)

2) DENOTES TWISTED PAIR.

3) ALL WIRING #10 AWG UNLESS OTHERWISE NOTED.

IRC 01 MAY 2012

PROPOSED
DESIGN NO. 10-0222
RED-IN YELLOW-OUT

AS INSTALLED
DATE _____
BY _____
(PRINT NAME)

PROPOSED D	M	Y	REVISIONS	D	C	COMPLETED D	M	Y	C

REGION SOUTHERN
SUB. IL RIVER 335

SIGNALS AND COMMUNICATIONS HOMEWOOD
DES. SIA
01 MAY 2012
CH. BJW

SSCC3+ WITH ISOLATED GATE
CROSSING CONTROLLER 40 AMP
PLAINFIELD, IL

RENWICK ROAD

ILR-011.87-06

DOT# 261 003P

INVENSYS RAIL CORPORATION

DES. : SIA	DATE: 01-05-12	JOB NO. : PICA10358	
CKD. : BJW	ISSUE DATE: N/A	EST. NO. : XP-6340	
DRN. : SIA	PLAN NO. :N/A	SHEET 6 OF 15	
P TIME:10:04	P DATE: $$PLOT_DATE	CAD ID. : ILR-011.87-06	

REVISIONS

NO.	DATE	BY	DESCRIPTION	APP. BY
1				
2				
3				
4				
5				

ILR-011.87-06.dgn
27-AUG-2012

INVENSYS RAIL CORP.
LOUISVILLE DIVISION, LOUISVILLE, KY

REVISIONS				
NO.	DATE	BY	DESCRIPTION	APP. BY
1				
2				
3				
4				
5				

CROSSING CONTROLLER SSCCIII+ 40-AMPERE UNIT, 91190

PROGRAM	NOTES	INITIAL SETTING BY: _____ DATE: _____
FLASH RATE:	30-70 FLASHES/MINUTE DEFAULT = 50	55 FLASHES/MINUTE
GATES USED:	YES/NO DEFAULT = YES	☑ YES ☐ NO
1 GC DELAY:	3-20 SEC., DEFAULT = 4	4 SECONDS
2 GC DELAY (40 AMP UNIT):	3-20 SEC., DEFAULT = 4	4 SECONDS
GATE RISING BELL:	ON/OFF, DEFAULT = ON	☐ ON ☑ OFF
ENABLED INPUTS:	1 THRU 7 ONLY	☑ 1 ☑ 2 ☐ 3 ☐ 4 ☐ 5 ☐ 6 ☑ 7
GC2/I7:	GC2 NORMAL, I7 = NORMAL GC2 INVERTED, I7 = NORMAL GC2 PRMT RELAY, I7 = PRMT HEALTH GC2 BEACONFDBK	☑ NORMAL ☐ INVERTED ☐ PRE-EMPT SIM ☐ PRE-EMPT ADV ☐ BEACON
INPUT 7	INPUT, PRMT HLTH, TEST SW	☐ IN ☐ HEALTH ☑ TEST SW
TEST SW 2TRKDSTK ONLY	ACTIVATE, ACT & STICK RELEASE	☐ ACTIVATE ☐ ACT & REL
ADV PRE-EMPT TIME (40A):	1-99 SEC., DEFAULT = 1	N/A SECONDS
MIN ACTIVATION TIME:	0-99 SEC., DEFAULT = 20	23 SECONDS
STICK RELEASE TIME:	5-120 MIN., DEFAULT = 15	N/A MINUTES
BEACON PICK-UP DELAY	5-600 SEC., DEFAULT = 20	N/A SECONDS
SUP ISLAND TIME:	5-20 MIN., DEFAULT = 20	N/A MINUTES
ENABLED OUTPUTS: (40 amp only)	DEFAULT = A + B	☑ A + B ☐ A ☐ B
DAYLIGHT SAVINGS:	DEFAULT = DISABLED	☑ ENABLED ☐ DISABLED
DATE:	N/A	☐ DATE SET
TIME:	24-FORMAT	☐ TIME SET
PASSWORD:	DEFAULT = DISABLED	☐ ENABLED ☑ DISABLED
CONFIGURE		
LOS TIMERS:	0-20 SECONDS, INPUTS 1-7 ONLY DEFAULT = 0	1: 0 SEC 5: 0 SEC 2: 0 SEC 6: 0 SEC 3: 0 SEC 7: 0 SEC 4: 0 SEC
MCF:		MCF: BASICPLS CRC: 731AF326
ATCS ADDRESS:	DEFAULT = 700000000000	
LOW BATTERY:	9.0-15.0 VOLTS, OR DISABLED DEFAULT = DISABLED	☑ DISABLED ☐ ENABLED _____ VOLTS
AUX I/O:	DEFAULT = NONVITAL OUTPUT	☑ NV OUTPUT ☐ FLASH SYNC IN ☐ FLASH SYNC OUT
DETECT LAMP NEUTRAL WIRE	DEFAULT = YES	☐ YES ☑ NO
TEST CONFIGURE		
LAMP TEST CANCEL TIMER:	1-15 MINUTES, DEFAULT = 5	5 MINUTES
LAMP TEST DELAY TIMER:	30-120 SEC., DEFAULT = 30	30 SEC.
LAMP TEST ON TIMER:	15-60 SEC., DEFAULT = 15	15 SEC.

STANDARD SETUP LAMP VOLTAGES PROCEDURE
USING TRUE RMS AC+DC METER, OR CONVERSION TABLE BELOW

SETUP LAMP VOLTAGES	INITIAL SETTINGS BY: _____ DATE: _____ METER: _____
FAR GATE	1 L1 = _____ VOLTS 1 L2 = _____ VOLTS 2 L1 = _____ VOLTS 2 L2 = _____ VOLTS
SSCCIII+	1 L1 = _____ VOLTS 1 L2 = _____ VOLTS 2 L1 = _____ VOLTS 2 L2 = _____ VOLTS
NEAR GATE	1 L1 = _____ VOLTS 1 L2 = _____ VOLTS 2 L1 = _____ VOLTS 2 L2 = _____ VOLTS

MULTIMETER READING VARIANCE FROM ACTUAL LAMP VOLTAGE

BATTERY BANK VOLTAGE	VALID LAMP OUTPUT RANGE (in volts)	DIGITAL METER (FLUKE 87 OR EQUIVALENT)	ANALOG METER (SIMPSON 260 OR TS111)
13.3	9.0 TO 12.0	1.3 VOLTS BELOW ACTUAL VALUE	0.6 VOLTS BELOW ACTUAL VALUE
14.7	9.0 TO 12.0	2.2 VOLTS BELOW ACTUAL VALUE	1.1 VOLTS BELOW ACTUAL VALUE
15.8	9.0 TO 12.0	2.6 VOLTS BELOW ACTUAL VALUE	2.0 VOLTS BELOW ACTUAL VALUE

FOR LAMP OUTPUT SETTINGS GREATER THAN 12.0 VOLTS, REDUCE THE LISTED VALUES BY 30%
LAMP VOLTAGE MEASUREMENTS SHOULD BE ACCURATE TO 0.3 VOLTS.

SOFTWARE VERSION: 9V546-A01.N

IRC 01 MAY 2012

PROPOSED
DESIGN NO. 10-0222
RED-IN YELLOW-OUT

AS INSTALLED
DATE _____
BY _____
(PRINT NAME)

PROPOSED D	M	Y	REVISIONS	D	C	COMPLETED D	M	Y	C

REGION SOUTHERN
SUB. IL RIVER 335
CN
SIGNALS AND COMMUNICATIONS HOMEWOOD
DES. SIA
01 MAY 2012
CH. BJW
SSCCIII+
PROGRAM DATA
PLAINFIELD, IL
RENWICK ROAD
ILR-011.87-07
DOT# 261 003P

INVENSYS RAIL CORPORATION

DES.: SIA	DATE: 01-05-12	JOB NO.: PICA10358	
CKD.: BJW	ISSUE DATE: N/A	EST. NO.: XP-6340	
DRN.: SIA	PLAN NO.: N/A	SHEET 7 OF 15	
P TIME: 10:04	P DATE: $$PLOT_DATE	CAD ID.: ILR-011.87-07	

INVENSYS RAIL CORP.
LOUISVILLE DIVISION, LOUISVILLE, KY

ilr-011.87-07.dgn
27-AUG-2012

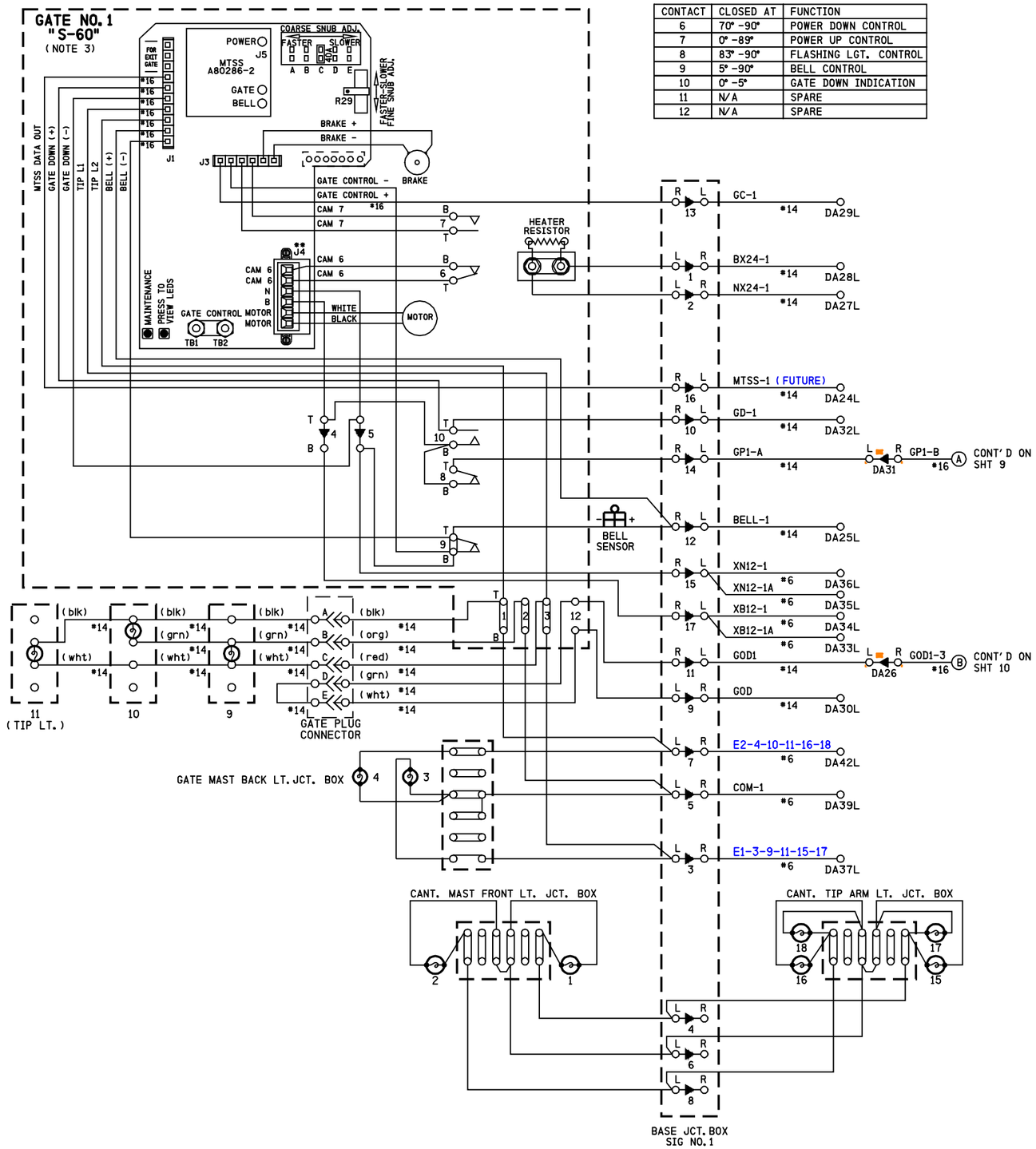

CONTACT	CLOSED AT	FUNCTION
6	70° -90°	POWER DOWN CONTROL
7	0° -89°	POWER UP CONTROL
8	83° -90°	FLASHING LGT. CONTROL
9	5° -90°	BELL CONTROL
10	0° -5°	GATE DOWN INDICATION
11	N/A	SPARE
12	N/A	SPARE

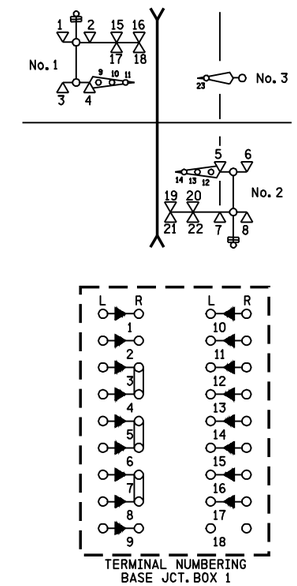

ON CANT. No. 1 ADD STRAP BETWEEN TERMINALS:
ADD STRAP BETWEEN TERMINAL 3R & 4R,
ADD STRAP BETWEEN TERMINAL 5R & 6R
AND ADD STRAP BETWEEN TERMINAL 7R & 8R.

NOTES

1) ON GATE No. 1 ADD JUMPER BETWEEN TERMINALS:
   ADD JUMPER BETWEEN TERMINAL 4T & 10B,
   ADD JUMPER BETWEEN TERMINAL 8B & 10B,
   AND ADD JUMPER BETWEEN TERMINAL 5B & 9B
2) ALL WIRING #10 AWG UNLESS OTHERWISE NOTED
3) GATE DESCENT TIME (RELEASE FROM VERTICAL TO FULLY HORIZONTAL) TO BE WITHIN 11 SECONDS
4) BELL CUT-OUT (5° -90°) WHEN REQUIRED REMOVE STRAP BETWEEN 9B AND 9T
5) ENSURE ALL TERMINALS HAVE TWO SHOULDER NUTS

IRC 01 MAY 2012

PROPOSED
DESIGN NO. 10-0222
RED-IN YELLOW-OUT

AS INSTALLED
DATE _____
BY _____
(PRINT NAME)

PROPOSED D	M	Y	REVISIONS	D	C	COMPLETED D	M	Y	C

REGION SOUTHERN
SUB. IL RIVER 335

SIGNALS AND COMMUNICATIONS HOMEWOOD
DES. SIA
01 MAY 2012
CH. BJW

GATE 1 MECHANISM CONTROL CIRCUITS
SAFETRAN S-60
PLAINFIELD, IL
RENWICK ROAD

ILR-011.87-08

DOT# 261 003P

REVISIONS				
NO.	DATE	BY	DESCRIPTION	APP. BY
1				
2				
3				
4				
5				

INVENSYS RAIL CORPORATION

DES. : SIA	DATE: 01-05-12	JOB NO. : PICA10358	
CKD. : BJW	ISSUE DATE: N/A	EST. NO. : XP-6340	
DRN. : SIA	PLAN NO. : N/A	SHEET 8 OF 15	
P TIME: 10:04	P DATE: $$PLOT_DATE	CAD ID. : ILR-011.87-08	

INVENSYS RAIL CORP.
LOUISVILLE DIVISION, LOUISVILLE, KY

ilr-011.87-08.dgn
27-AUG-2012

CONTACT	CLOSED AT	FUNCTION
6	70° -90°	POWER DOWN CONTROL
7	0° -89°	POWER UP CONTROL
8	83° -90°	FLASHING LGT. CONTROL
9	5° -90°	BELL CONTROL
10	0° -5°	GATE DOWN INDICATION
11	N/A	SPARE
12	N/A	SPARE

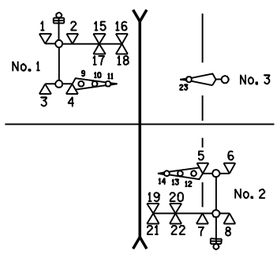

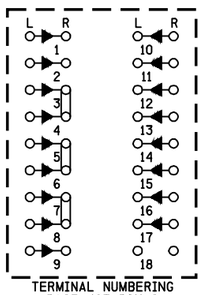

TERMINAL NUMBERING
BASE JCT. BOX 2

ON CANT. No. 2 ADD STRAP BETWEEN TERMINALS:
ADD STRAP BETWEEN TERMINAL 3R & 4R,
ADD STRAP BETWEEN TERMINAL 5R & 6R
AND ADD STRAP BETWEEN TERMINAL 7R & 8R.

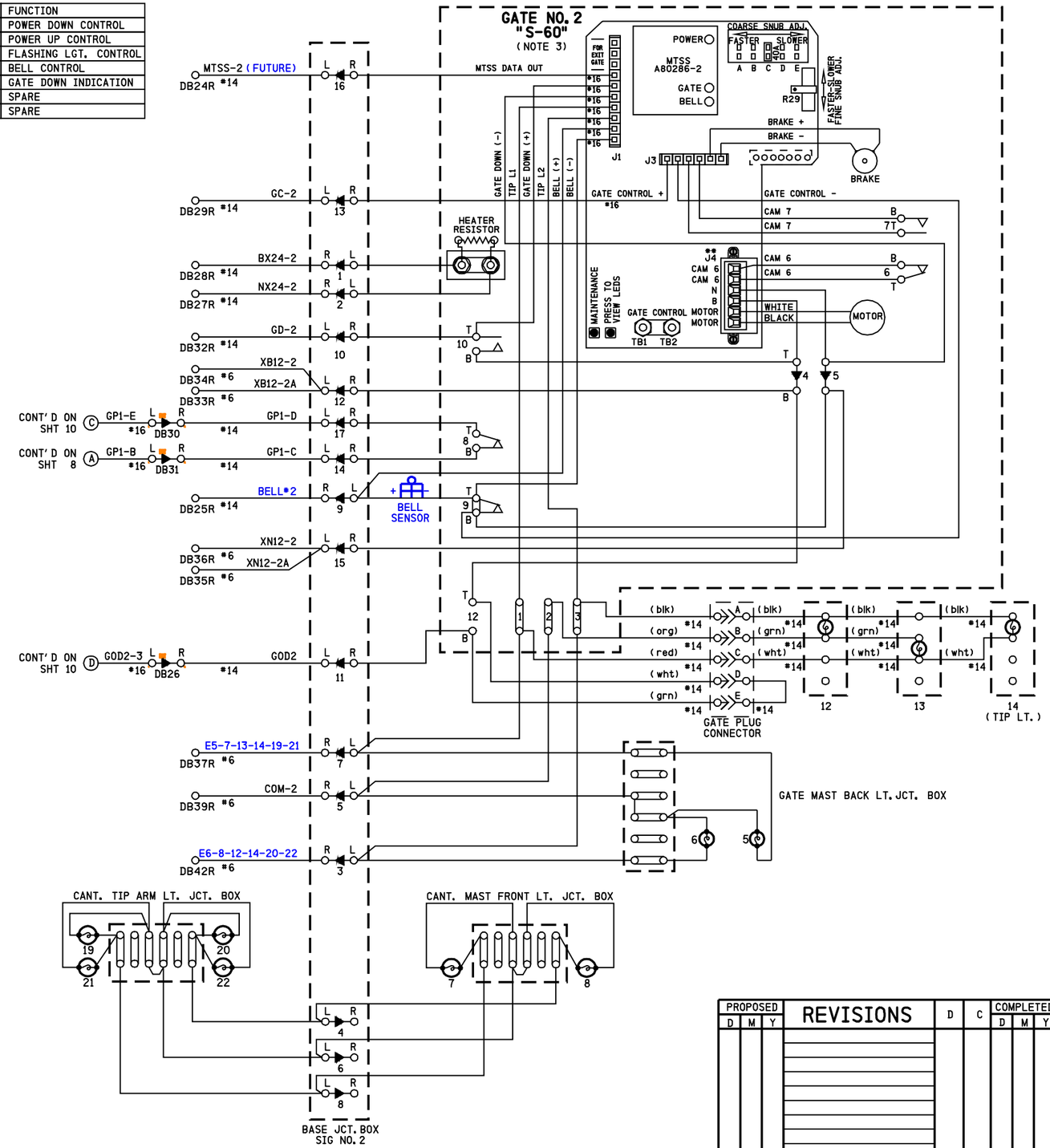

NOTES

1) ON GATE No. 2 ADD JUMPER BETWEEN TERMINALS:
   ADD JUMPER BETWEEN TERMINAL 4T &10B,
   ADD JUMPER BETWEEN TERMINAL 5B & 9B,
   AND ADD JUMPER BETWEEN TERMINAL 4B & 12T
2) ALL WIRING #10 AWG UNLESS OTHERWISE NOTED
3) GATE DESCENT TIME (RELEASE FROM VERTICAL TO FULLY HORIZONTAL) TO BE WITHIN 11 SECONDS
4) BELL CUT-OUT (5° -90°) WHEN REQUIRED REMOVE STRAP BETWEEN 9B AND 9T
5) ENSURE ALL TERMINALS HAVE TWO SHOULDER NUTS

IRC 01 MAY 2012

PROPOSED
DESIGN NO. 10-0222
RED-IN YELLOW-OUT

AS INSTALLED
DATE _____
BY _____
(PRINT NAME)

PROPOSED D	M	Y	REVISIONS	D	C	COMPLETED D	M	Y	C

REGION SOUTHERN
SUB. IL RIVER 335

SIGNALS AND COMMUNICATIONS HOMEWOOD
01 MAY 2012
DES. SIA
CH. BJW

GATE 2 MECHANISM CONTROL CIRCUITS
SAFETRAN S-60
PLAINFIELD, IL
RENWICK ROAD

ILR-011.87-09

DOT# 261 003P

NO.	DATE	BY	REVISIONS DESCRIPTION	APP. BY
1				
2				
3				
4				
5				

INVENSYS RAIL CORPORATION

DES. : SIA	DATE: 01-05-12	JOB NO. : PICA10358	
CKD. : BJW	ISSUE DATE: N/A	EST. NO. :XP-6340	
DRN. : SIA	PLAN NO. :N/A	SHEET 9 OF 15	
P TIME:10:04	P DATE: $$PLOT_DATE	CAD ID. :ILR-011.87-09	

INVENSYS RAIL CORP.
LOUISVILLE DIVISION, LOUISVILLE, KY

ilr-011.87-09.dgn
27-AUG-2012

CONTACT	CLOSED AT	FUNCTION
6	70° -90°	POWER DOWN CONTROL
7	0° -89°	POWER UP CONTROL
8	83° -90°	FLASHING LGT. CONTROL
9	5° -90°	BELL CONTROL
10	0° -5°	GATE DOWN INDICATION
11	N/A	SPARE
12	N/A	SPARE

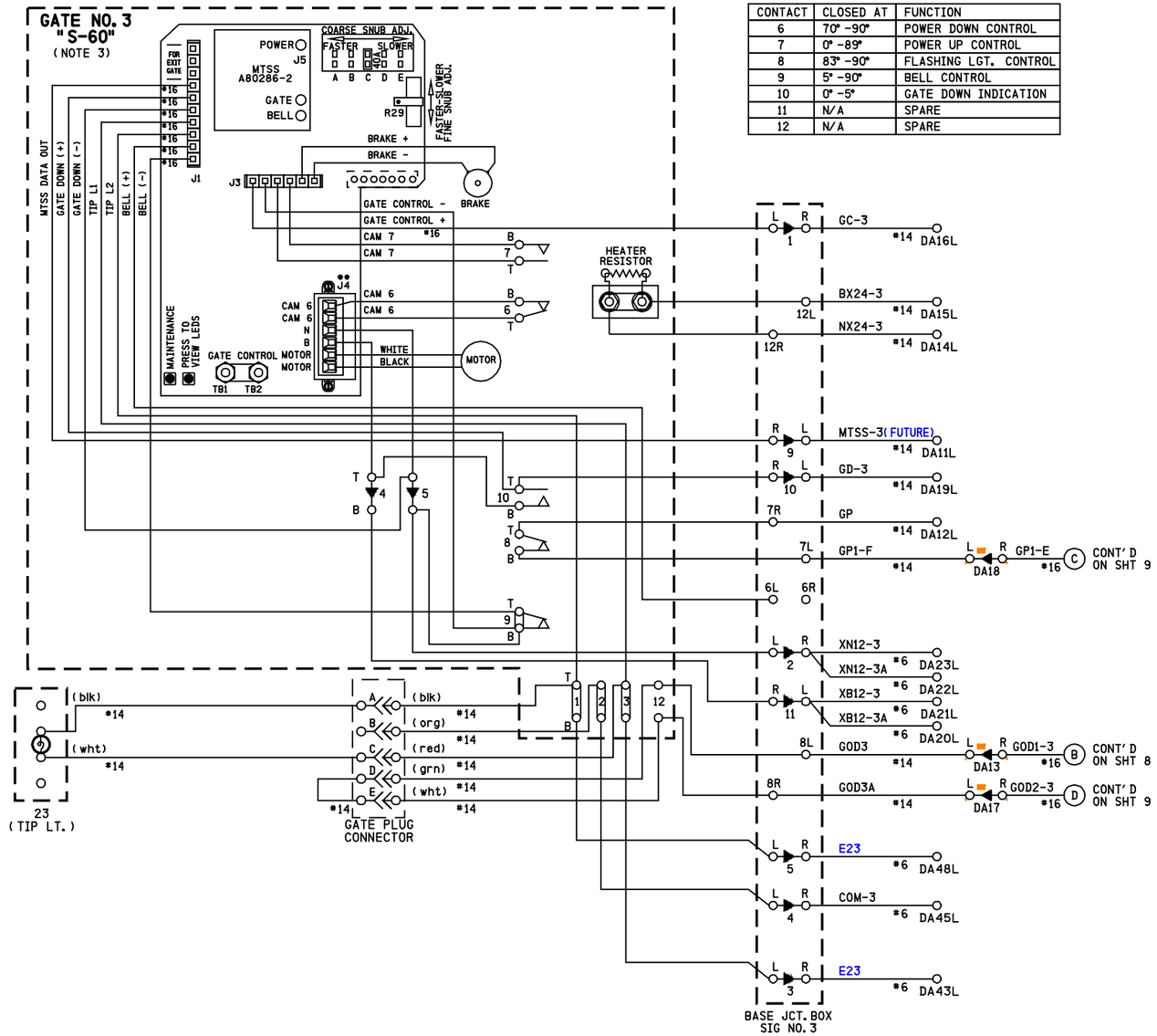

NOTES

1) ON GATE No. 3 ADD JUMPER BETWEEN TERMINALS: ADD JUMPER BETWEEN TERMINAL 4T & 10B, AND ADD JUMPER BETWEEN TERMINAL 5B & 9B
2) ALL WIRING #10 AWG UNLESS OTHERWISE NOTED
3) GATE DESCENT TIME (RELEASE FROM VERTICAL TO FULLY HORIZONTAL) TO BE WITHIN 11 SECONDS
4) BELL CUT-OUT (5° -90°) WHEN REQUIRED REMOVE STRAP BETWEEN 9B AND 9T
5) ENSURE ALL TERMINALS HAVE TWO SHOULDER NUTS

IRC 01 MAY 2012

PROPOSED
DESIGN NO. 10-0222
RED-IN YELLOW-OUT

AS INSTALLED
DATE _____
BY _____
(PRINT NAME)

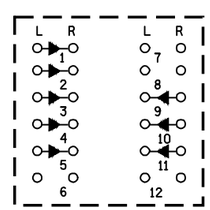

TERMINAL NUMBERING BASE JCT. BOX 3

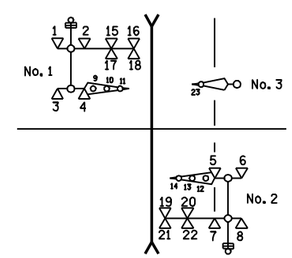

REVISIONS			
NO.	DATE	BY	DESCRIPTION
1			
2			
3			
4			
5			

INVENSYS RAIL CORPORATION			
DES. : SIA	DATE: 01-05-12	JOB NO. : PICA10358	
CKD. : BJW	ISSUE DATE: N/A	EST. NO. : XP-6340	
DRN. : SIA	PLAN NO. : N/A	SHEET 10 OF 15	
P TIME: 10:04	P DATE: $$PLOT_DATE	CAD ID. : ILR-011.87-10	

PROPOSED			REVISIONS	D	C	COMPLETED			C
D	M	Y				D	M	Y	

REGION SOUTHERN
SUB. IL RIVER 335

SIGNALS AND COMMUNICATIONS HOMEWOOD — DES. SIA
01 MAY 2012 — CH. BJW

GATE 3 MECHANISM CONTROL CIRCUITS
SAFETRAN S-60
PLAINFIELD, IL
RENWICK ROAD

ILR-011.87-10

DOT# 261 003P

INVENSYS RAIL CORP.
LOUISVILLE DIVISION, LOUISVILLE, KY

ilr-011.87-10.dgn
27-AUG-2012

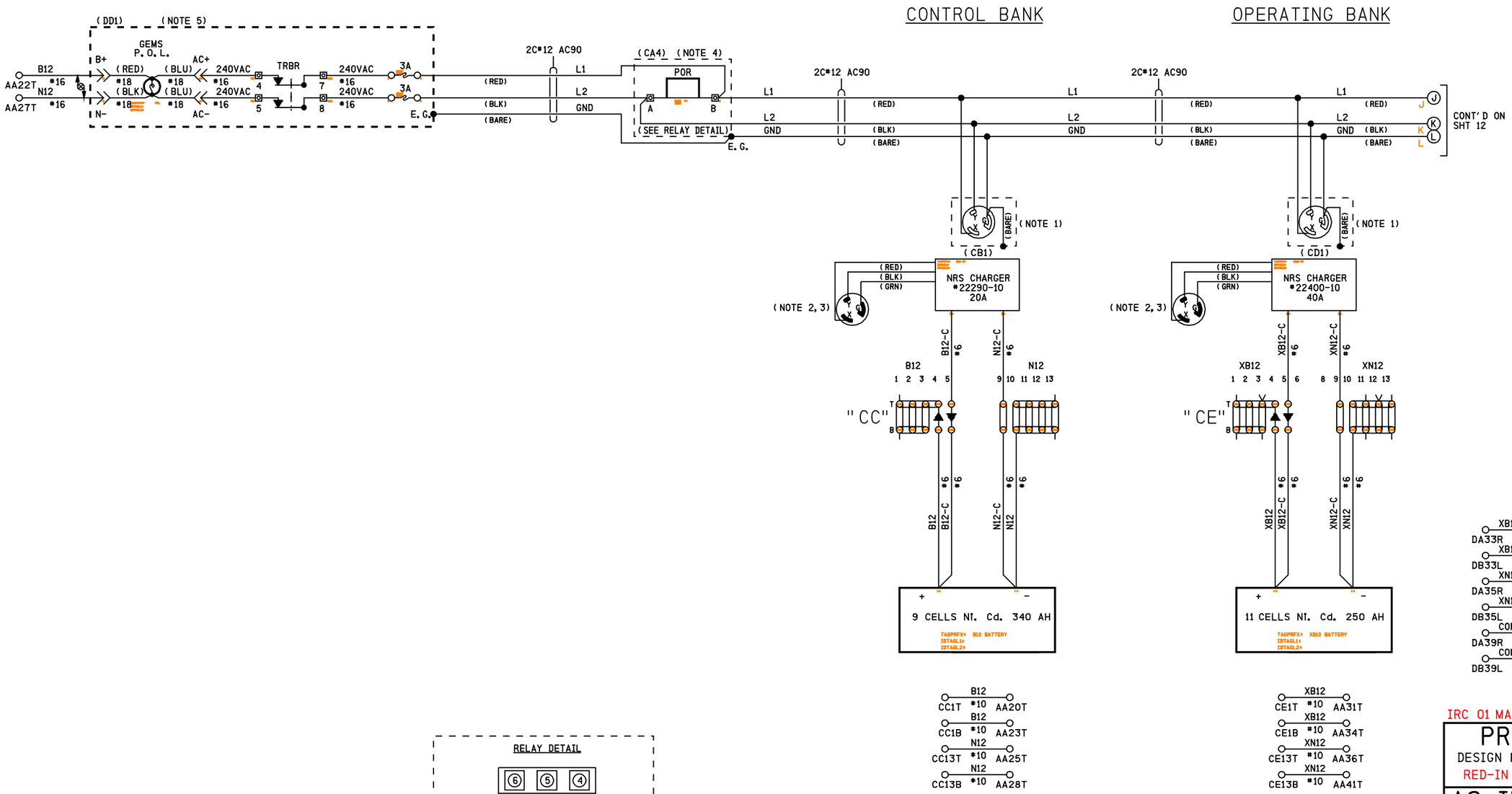

IRC 01 MAY 2012

PROPOSED
DESIGN NO. 10-0222
RED-IN YELLOW-OUT

AS INSTALLED
DATE _____
BY _____
(PRINT NAME)

NOTES

1) 20A 250V TEST LOCK RECEPTACLE HUBBELL HBL 2320
2) PLUG HUBBELL HBL 2321 REFER TO PS-902 PAGE 6
3) GROUND LUG LOCATED ON CHARGER HOUSING
4) PART OF POWER CONTROL AND INDICATION RELAY JUNCTION BOX
5) PART OF POWER OFF INDICATOR LIGHT REPEATER RELAY JUNCTION BOX (REFER TO PS-907 SHT 2A)

<< DENOTES WAGO TERMINAL

DENOTES TWISTED PAIR

RELAY DETAIL

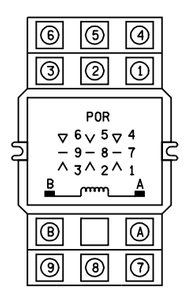

RELAY - POTTER & BRUMFIELD
MODEL KUP-14A15-240 SOCKET MOUNTABLE
240 VAC W/ 3 FORM C CONTACTS

SOCKET - SCREW TERMINAL
MODEL 27E121

PROPOSED D	M	Y	REVISIONS	D	C	COMPLETED D	M	Y	C

REGION SOUTHERN
SUB. IL RIVER 335

SIGNALS AND COMMUNICATIONS HOMEWOOD — DES. SIA
01 MAY 2012 — CH. BJW

DC DISTRIBUTION
PLAINFIELD, IL
RENWICK ROAD

ILR-011.87-11

DOT# 261 003P

INVENSYS RAIL CORPORATION
DES.: SIA | DATE: 01-05-12 | JOB NO.: PICA10358
CKD.: BJW | ISSUE DATE: N/A | EST. NO.: XP-6340
DRN.: SIA | PLAN NO.: N/A | SHEET 11 OF 15
P TIME: 10:04 | P DATE: $$PLOT_DATE | CAD ID.: ILR-011.87-11

NO.	DATE	BY	DESCRIPTION	APP. BY
1				
2				
3				
4				
5				

REVISIONS

INVENSYS RAIL CORP.
LOUISVILLE DIVISION, LOUISVILLE, KY

ilr-011.87-11.dgn
27-AUG-2012

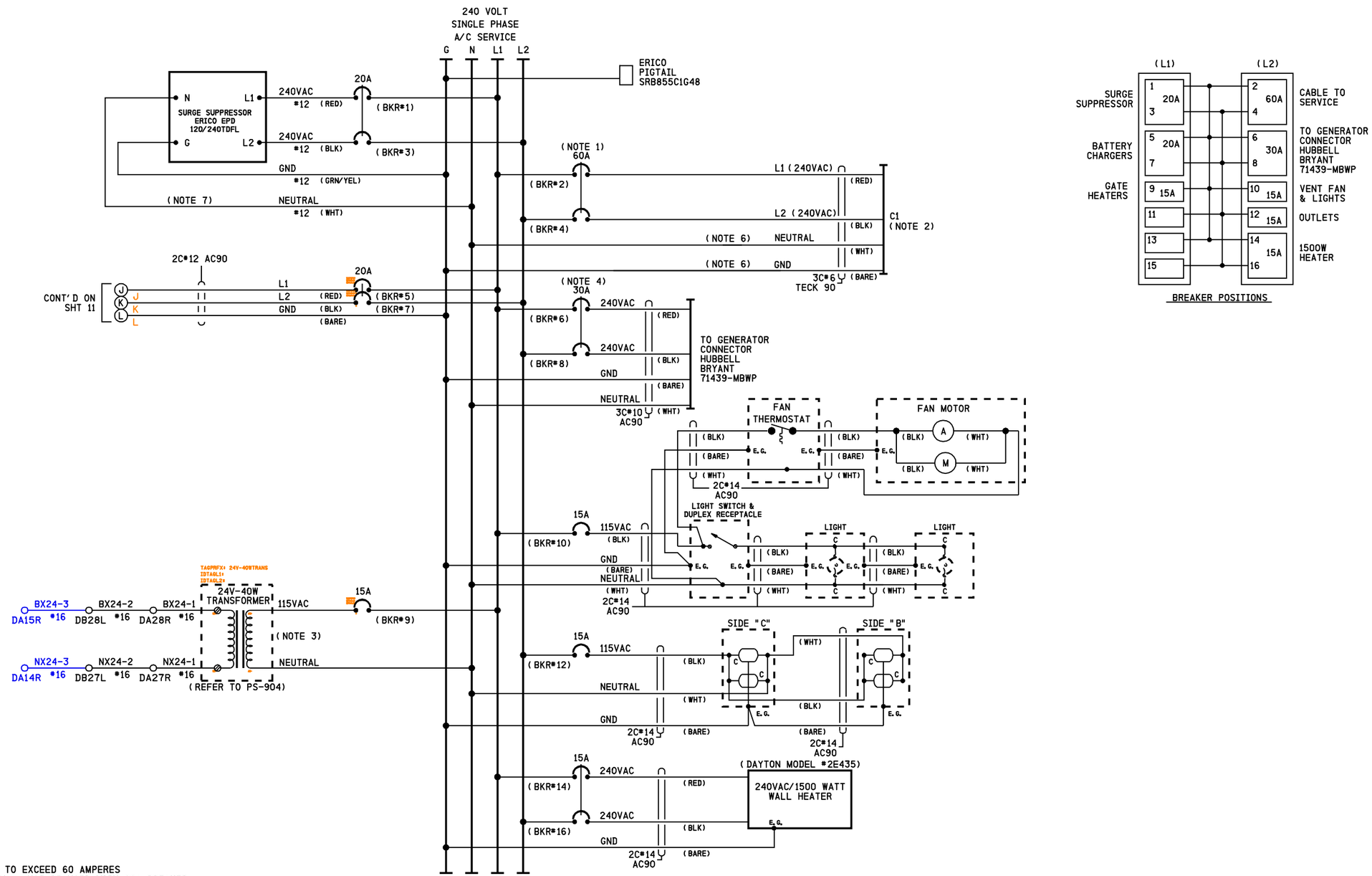

NOTES

1) CIRCUIT BREAKER NOT TO EXCEED 60 AMPERES
   RETAINING KIT PK4MB2LA MUST BE USED WITH 60A BREAKER
2) FEEDER CIRCUIT BREAKER, AT STUB POLE SERVICE
   PANEL, NOT TO EXCEED 60 AMPERES
3) 24 VOLT - 40 WATT TRANSFORMER (CN STOCK #02-45-367)
4) A SWITCH TRANSFER KIT MUST BE INSTALLED BETWEEN
   THE SERVICE DISCONNECT BREAKER AND THE GENERATOR HOOK UP
5) WHERE SEPARATE GROUND WIRE EXISTS BETWEEN THE SERVICE AND THE
   LOAD CENTER, REMOVE THE BRASS COLORED BONDING SCREW
   (REFER TO SCHEMATIC ON BOX COVER FOR EXACT LOCATION)
6) S.C.#6 STRANDED, CSA TYPE R90 (X-LINK)
7) KEEP LEADS AS SHORT AS POSSIBLE

IRC 01 MAY 2012

PROPOSED
DESIGN NO. 10-0222
RED-IN YELLOW-OUT

AS INSTALLED
DATE _____
BY _____
(PRINT NAME)

PROPOSED D	M	Y	REVISIONS	D	C	COMPLETED D	M	Y	C

REGION SOUTHERN
SUB. IL RIVER 335

SIGNALS AND COMMUNICATIONS HOMEWOOD
01 MAY 2012
DES. SIA
CH. BJW

AC DISTRIBUTION
PLAINFIELD, IL
RENWICK ROAD

ILR-011.87-12

DOT# 261 003P

REVISIONS				
NO.	DATE	BY	DESCRIPTION	APP. BY
1				
2				
3				
4				
5				

INVENSYS RAIL CORPORATION

DES.: SIA	DATE: 01-05-12	JOB NO.: PICA10358	
CKD.: BJW	ISSUE DATE: N/A	EST. NO.: XP-6340	
DRN.: SIA	PLAN NO.: N/A	SHEET 12 OF 15	
P TIME: 10:04	P DATE: $$PLOT_DATE	CAD ID.: ILR-011.87-12	

INVENSYS RAIL CORP.
LOUISVILLE DIVISION, LOUISVILLE, KY

ilr-011.87-12.dgn
27-AUG-2012

REVISIONS				
NO.	DATE	BY	DESCRIPTION	APP. BY
1				
2				
3				
4				
5				

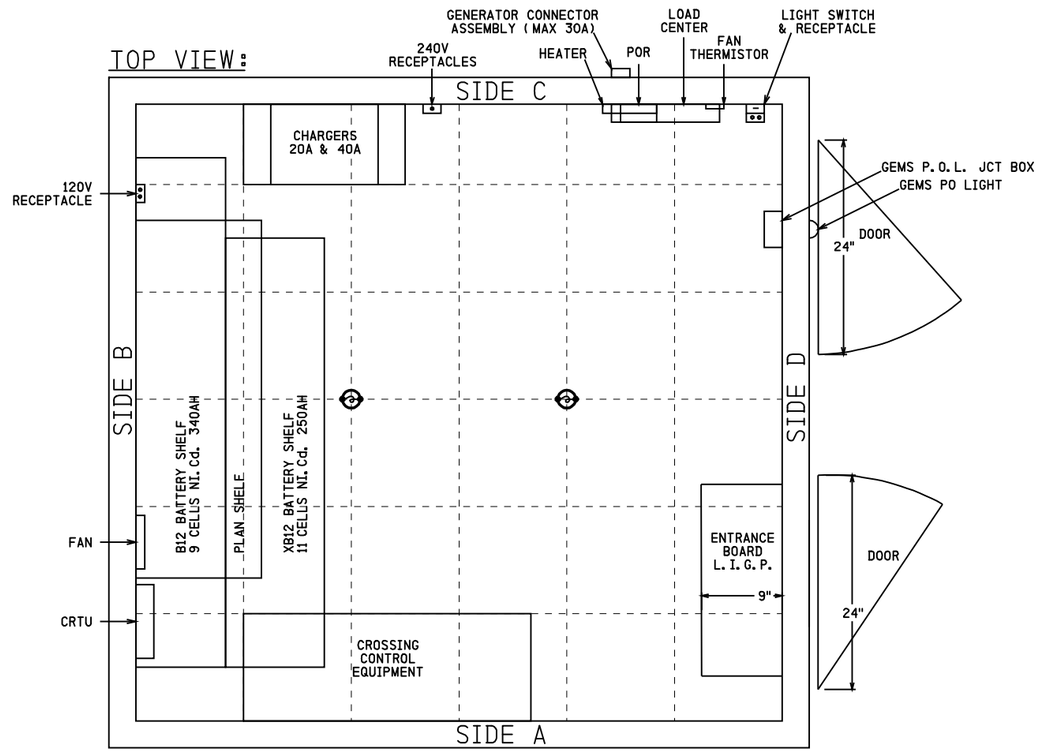

IRC 01 MAY 2012

PROPOSED
DESIGN NO. 10-0222
RED-IN YELLOW-OUT

AS INSTALLED
DATE _____
BY _____
(PRINT NAME)

PROPOSED			REVISIONS	D	C	COMPLETED			C
D	M	Y				D	M	Y	

REGION SOUTHERN
SUB. IL RIVER 335

SIGNALS AND COMMUNICATIONS HOMEWOOD | DES. SIA
01 MAY 2012 | CH. BJW

BUNGALOW LAYOUT TOP VIEW

PLAINFIELD, IL
RENWICK ROAD

ILR-011.87-13

DOT# 261 003P

INVENSYS RAIL CORPORATION		
DES.: SIA	DATE: 01-05-12	JOB NO.: PICA10358
CKD.: BJW	ISSUE DATE: N/A	EST. NO.: XP-6340
DRN.: SIA	PLAN NO.: N/A	SHEET 13 OF 15
P TIME: 10:05	P DATE: $$PLOT_DATE	CAD ID.: ILR-011.87-13

INVENSYS RAIL CORP.
LOUISVILLE DIVISION, LOUISVILLE, KY

ilr-011.87-13.dgn
27-AUG-2012

REVISIONS				
NO.	DATE	BY	DESCRIPTION	APP. BY
1				
2				
3				
4				
5				

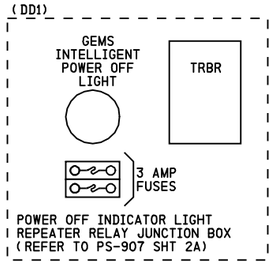

SIDE VIEW: SIDE D

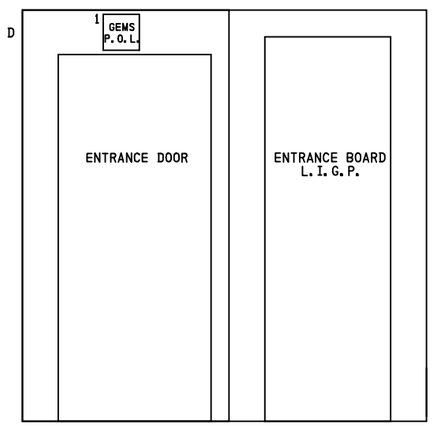

ENTRANCE BOARD L.I.G.P.

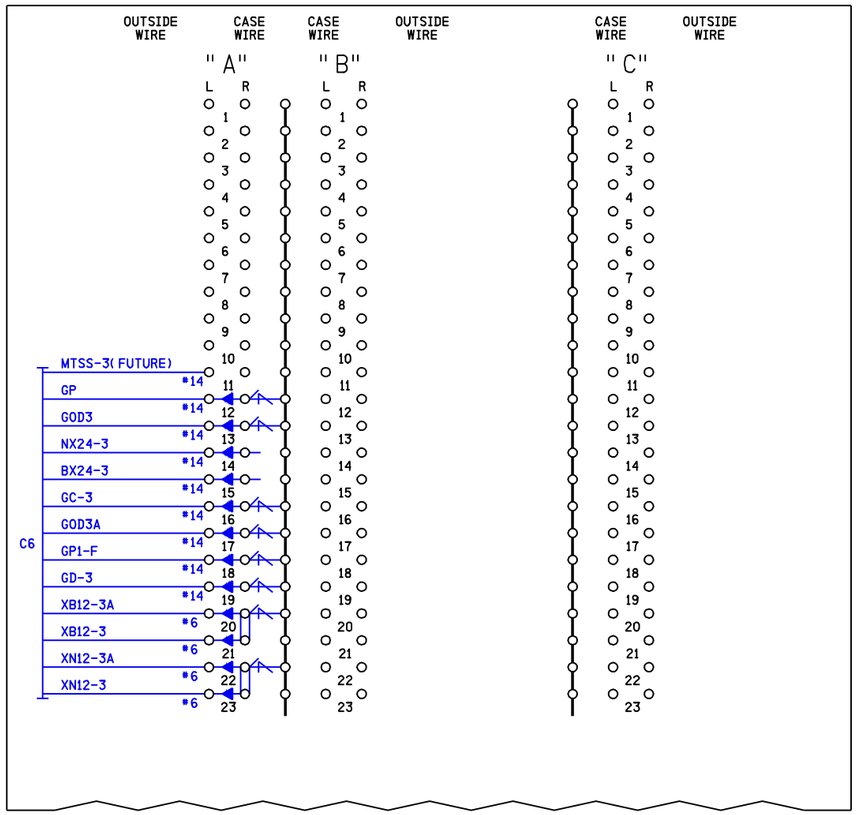

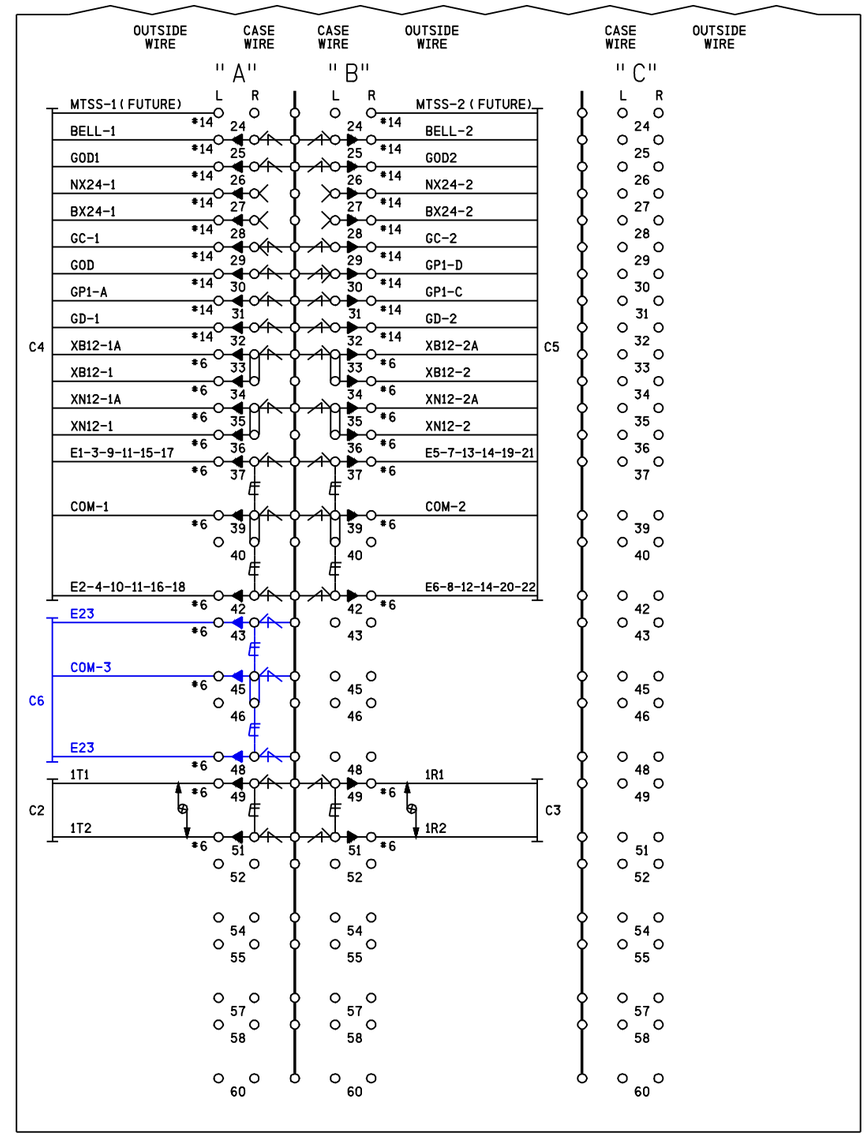

NOTES

- DENOTES HD EQUALIZER CN# 02-32-391 SAFETRAN # 022700-1X
- DENOTES LOW VOLTAGE ARRESTOR CN# ERICO # ETSP23050
- DENOTES GROUND PLANE
- DENOTES TWISTED PAIR

IRC 01 MAY 2012

PROPOSED
DESIGN NO. 10-0222
RED-IN YELLOW-OUT

AS INSTALLED
DATE _____
BY _____
(PRINT NAME)

PROPOSED D	M	Y	REVISIONS	D	C	COMPLETED D	M	Y	C

REGION SOUTHERN
SUB. IL RIVER 335

SIGNALS AND COMMUNICATIONS HOMEWOOD
01 MAY 2012
DES. SIA
CH. BJW

BUNGALOW LAYOUT SIDE D
& L.I.G.P.
PLAINFIELD, IL
RENWICK ROAD

ILR-011.87-14

DOT# 261 003P

INVENSYS RAIL CORPORATION

DES.: SIA	DATE: 01-05-12	JOB NO.: PICA10358	
CKD.: BJW	ISSUE DATE: N/A	EST. NO.: XP-6340	
DRN.: SIA	PLAN NO.: N/A	SHEET 14 OF 15	
P TIME: 10:05	P DATE: $$PLOT_DATE	CAD ID.: ILR-011.87-14	

INVENSYS RAIL CORP.
LOUISVILLE DIVISION, LOUISVILLE, KY

ilr-011.87-14.dgn
27-AUG-2012

REVISIONS				
NO.	DATE	BY	DESCRIPTION	APP. BY
1				
2				
3				
4				
5				

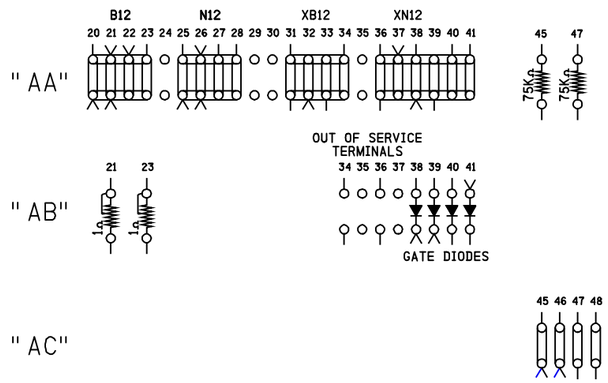

SIDE A

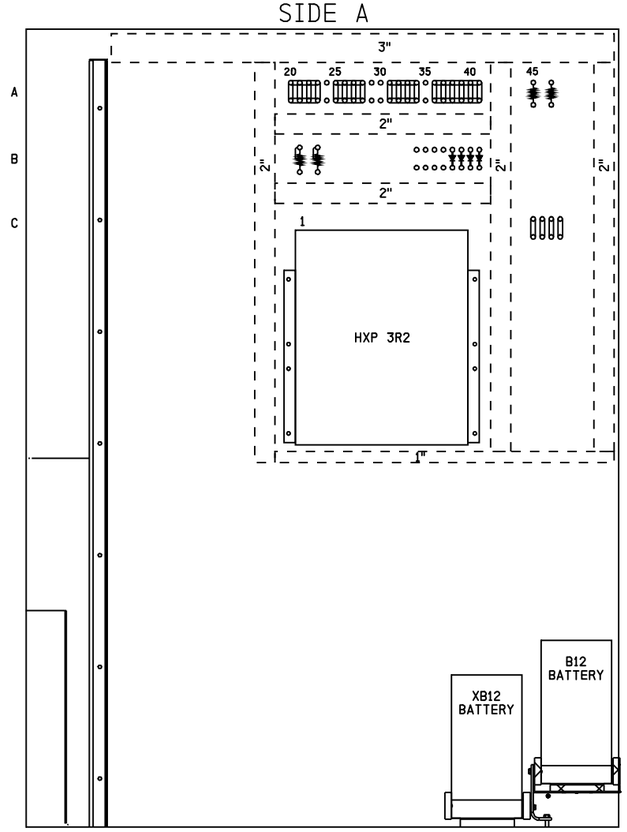

SIDE B

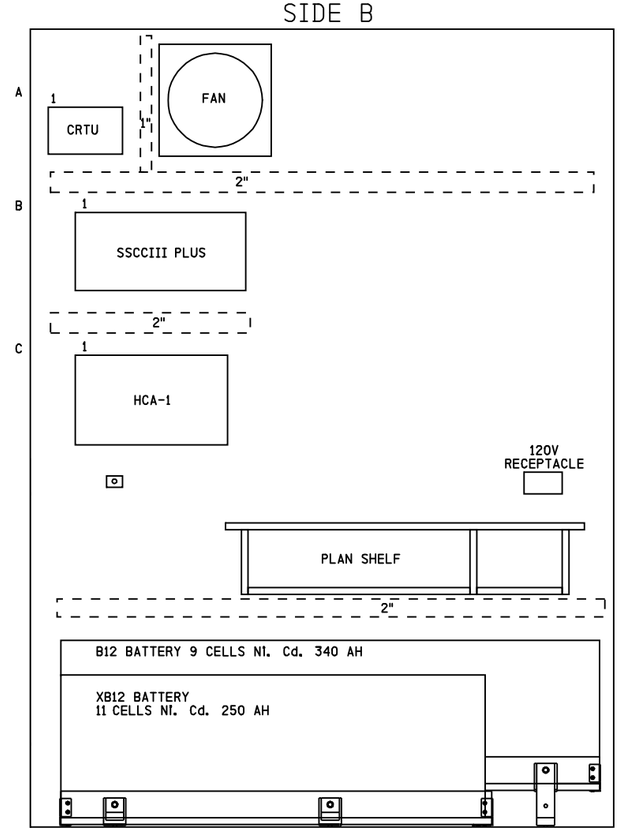

SIDE C

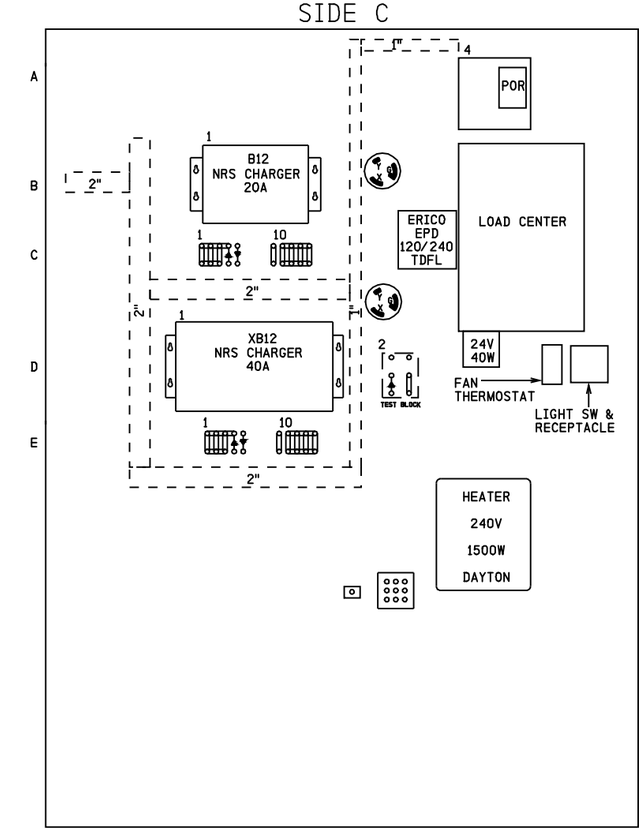

NOTES

1) SURGE PROTECTION SHOULD BE BONDED TO BUNGALOW

REPRESENTS PANDUIT

DENOTES RECTIFIER (SAFETRAN #8008A299006)

IRC 01 MAY 2012

PROPOSED
DESIGN NO. 10-0222
RED-IN YELLOW-OUT

AS INSTALLED
DATE _____
BY _____
(PRINT NAME)

PROPOSED			REVISIONS	D	C	COMPLETED			C
D	M	Y				D	M	Y	

REGION SOUTHERN
SUB. IL RIVER 335

SIGNALS AND COMMUNICATIONS HOMEWOOD
01 MAY 2012
DES. SIA
CH. BJW

BUNGALOW LAYOUT SIDES A, B & C

PLAINFIELD, IL
RENWICK ROAD

ILR-011.87-15

16

DOT# 261 003P

INVENSYS RAIL CORPORATION		
DES.: SIA	DATE: 01-05-12	JOB NO.: PICAU0358
CKD.: BJW	ISSUE DATE: N/A	EST. NO. XP-6340
DRN.: SIA	PLAN NO.: N/A	SHEET 15 OF 15
P TIME: 10:05	P DATE: $$PLOT_DATE	CAD ID.: ILR-011.87-15

INVENSYS RAIL CORP.
LOUISVILLE DIVISION, LOUISVILLE, KY

ilr-011.87-15.dgn
27-AUG-2012