Completion of this form is necessary to accomplish the statutory purpose as outlined in the Illinois Public Utilities Act, chapter 111 2/3, Sec. 9. Failure to provide the requested information may prevent your request from being processed. This form has been approved by the Forms Management Center.

Form 3

STATE OF ILLINOIS
ILLINOIS COMMERCE COMMISSION

Petition for permission to make a major change in crossing protection, or to install new protection under 92 Illinois Administrative Code 1535.400 (d)

Date: **July 11, 2012**

To the Illinois Commerce Commission:

The petitioner **CSX Transportation** shows

(1) That it is a railroad company operating a line of railroad in the State of Illinois.

(2) That petitioner proposes and hereby makes application for authority to make a major change in crossing protection, or to install new protection, under 92 Illinois Administrative Code 1535.400 (d) adopted by this Commission.

(3) That the location of the crossing, the nature of protection now established and proposed to be established, and other pertinent facts in connection therewith, are set forth in the statement attached to and forming part of this petition.

(4) That petitioner's reasons and purpose, with reference to its said proposal are

Installation of Flashing Light Signals & Gates with a PMD-3, to replace existing Flashing Light Signals at SR-32 (IL 32).

(5) That the facts set forth in this petition and in the statement and plans or plats attached thereto, are, all of them, true and correct to the best of petitioner's knowledge and belief.

WHEREFORE, the petitioner prays that the Commission will, if deemed desirable by the Commission, set the aforesaid matter for hearing, and that the Commission enter an order or adopt a resolution consenting to and granting authority for the making of the said proposed changes in or additions to crossing protection.

CSX Transportation

By

Amanda J. DeCesare
Project Manager, CSXT Public Projects
(859) 344-8442

Sean Craig
(Attorney for Petitioner)

CSX Transportation
500 Water Street, SC J-150
Jacksonville, FL 32202
(Attorney's Address)

Statement, attached to and part of an application for permission to make a major change in crossing protection or to install new protection, under 92 Ill. Adm. Code 1535.400(d).

1. Name of Railroad Company **CSX Transportation**

2. Crossing Number **154618N**

3. Village or City **(near) LaPlace**

4. Name of Street or Highway **SR-32 (IL 32)**

5. Public Agency Maintaining Highway **ILDOT**

6. Protection now established: (Give full description. Indicate the hours of any manual protection.)

   Flashing Light Signals and a bell

7. Protection desired: (Give details)

   Flashing Light Signals and Gates with a bell.

8. Number of main tracks **1** Other tracks **0**

9. Number of passenger train movements: 6 a.m. to 6 p.m. **0** 6 p.m. to 6 a.m. **0**

10. Number of freight train movements: 6 a.m. to 6 p.m. **0** 6 p.m. to 6 a.m. **0**

11. Approximate number of switch movements: 6 a.m. to 6 p.m. **0** 6 p.m. to 6 a.m. **0**

12. Maximum speed of trains at crossing on each track in each direction

Track 1 N/E Bound	**30**	mph	S/W Bound	**30** mph
Track 2 N/E Bound	**N/A**	mph	S/W Bound	**N/A** mph
Track 3 N/E Bound	**N/A**	mph	S/W Bound	**N/A** mph

13. Passenger platforms served by tracks within the limits of track circuits, if any **N/A**

14. Where automatic signals or gates are proposed, approximately number of train or engine movements daily which would cause false indications or operation **0**

15. Nature and approximate amount of street or highway traffic over crossing
AADT 1250 ; AADT Year 2009 ; 28% Trucks ; 0% Buses ; 40 MPH Highway speed

16. In addition to the information listed hereinbefore in Form 3, attach a track plan or plat of the proposed crossing. This plan should show:

(a) Width and surface of highway.
(b) Highway intersections (including private driveways to be so indicated) and location of established highway signs or signals within 100 feet of crossing.
(c) Location of tracks, switches and other railroad facilities such as block signals, etc. within limits of track circuits, present and/or proposed.
(d) Where automatic protection is proposed, show proposed location of signals (sidelights, cantilevers, etc., if any).
(e) Show the length of each operation track section within the control limits of the crossing protection and its function.

ADDITIONAL INFORMATION

Less than 1 train per day

VERIFICATION

I, **Amanda J. DeCesare**, first being duly sworn upon oath depose and say that I am **Project Manager Public Projects** of **CSX Transportation**, an **Virginia** corporation; that I have read the above and foregoing petition by me subscribed and know the contents thereof; that said contents are true in substance and in fact, except as to those matters stated upon information and belief, and as to those, I believe same to be true.

Project Manager Public Projects

CSX TRANSPORTATION, INC.
FORCE ACCOUNT ESTIMATE

ACCT. CODE : 709 - IL0373

ESTIMATE SUBJECT TO REVISION AFTER: **12/11/2012** **DOT NO.:** 154618N
CITY: LaPlace **COUNTY:** Piatt **STATE:** IL
DESCRIPTION: SR-32 (IL 32) - Install FLS&G to replace existing FLS.

DIVISION: Nashville **SUB-DIV:** Decatur **MILE POST:** BD - 264.45
AGENCY PROJECT NUMBER: RR512017

	PRELIMINARY ENGINEERING:				
200	Additive	31.34%		$	-
230	Expenses			$	-
212	Contracted & Administrative Engineering Services			$	1,500
	Subtotal			$	1,500
	CONSTRUCTION ENGINEERING/INSPECTION:				
200	Additive	31.34%		$	-
230	Expenses			$	-
212	Contracted & Administrative Engineering Services			$	1,500
	Subtotal			$	1,500
	FLAGGING SERVICE: (Contract Labor)				
070	Labor (Conductor-Flagman)			$	-
050	Labor (Foreman/Inspector)			$	-
070	Additive	71.09%	(Transportation Department)	$	-
050	Additive	95.98%	(Engineering Department)	$	-
230	Per Diem	(Engineering Department)		$	-
230	Expenses			$	-
	Subtotal			$	-
	SIGNAL & COMMUNICATIONS WORK:		(Details Attached)	$	211,776
	TRACK WORK: (Details Attached)			$	-
	ACCOUNTING & BILLING:				
040	Labor			$	2,700
040	Additive	63.03%		$	1,702
	Subtotal			$	4,402
	PROJECT SUBTOTAL			$	219,178
900	**CONTINGENCIES:**	10.00%		$	21,918
	GRAND TOTAL		**********	$	241,096

DIVISION OF COST:

Agency	100.00%		$	241,096
Railroad			$	-
	TOTAL	**********	$	241,096

NOTE: Estimate is based on FULL CROSSING CLOSURE during work by Railroad Forces.
This estimate has been prepared based on site conditions, anticipated work duration periods, material prices, labor rates, manpower and resource availability, and other factors known as of the date prepared. The actual cost for CSXT work may differ based upon the agency's requirements, their contractor's work procedures, and/or other conditions that become apparent once construction commences or during the progress of the work

Office of Assistant Chief Engineer Public Projects--Jacksonville, Florida

Estimated prepared by: BSE **Approved by:** AJD **CSXT Public Project Group**
DATE: 6/14/2012 **REVISED:** **DATE:** 6/15/2012

Form Revised 05-05-2010-LLS

Estimate No. 120373

CSX Transportation

FAP 758 (IL-32) - Install FLS&G.
(near) LaPlace, IL

DOT: 154618N OP: IL0373 CSX Project: IL2012021

Summary

Material	$ 71,204
Sales Tax	$ 0
Labor:	
Construction Labor (133 man-days)	$ 36,509
Shop Labor (5 man-days)	$ 1,050
Subsistence (101 man-days)	$ 13,130
Railroad Engineering, Preliminary	$ 4,578
Railroad Engineering, Construction	$ 5,476
Additives to Construction Labor	$ 33,202
Additives to Shop Labor	$ 910
Additives to Track Labor	$ 0
Additives to Engineering	$ 3,151
Equipment Expenses (21 work days)	$ 13,650
Waste Management (21 work days)	$ 252
Contract Engineering	$ 18,165
Freight	$ 4,000
Poleline Removal	$ 0
AC Power Service	$ 2,500
Salvage	$ -1
VAC-TRUCK	$ 4,000
TOTAL ESTIMATE COST	$ 211,778

Date: 06/14/2012
Estimated By: Scott Elliott

NOTE: This estimate should be considered void one year from date of estimate.

Shop Material List for CSX Project: IL2012021 (Effective: 06/14/2012)
INSTALL FLS&G W/HXP-3R
LAPLACE, IL - BD 264.45

Catalog Num	Cond	Unit Price	Qty	Cost	Description
020-0003386	1	6781.00	1	6781.00	HOUSE 6X6L ALUM INCLUDES 5 SHELFS, FARADAY CLOSET, 240V
020-0017120	1	11.52	6	69.12	BLOCK TERMINAL 12 POST SINGLE STRIP AAR 14.1.6 WITH 1 AAR
020-0017125	1	3.54	6	21.24	BLOCK TERMINAL 2 POST AAR 14.1.8 WITH 1 AAR 14.1.11
020-0017211	1	627.20	1	627.20	TRANSFORMER 010520-50X LIGHT 750VA MOD SLT 50 SAFETRAN PRI
020-0017385	1	60.94	1	60.94	CABLE RJ45 TO RJ4 15’ GETS P/N 075061-015
020-0021965	1	8.96	1	8.96	EXTRACTOR DWG 59688-4 TERMINAL GRS CAT P3-308 REF
020-0022651	1	55.89	5	279.45	PLUGBOARD KIT TYPE B1 OR ST1 RELAY ASSEMBLY WITH 12 EACH
020-0022701	1	68.01	29	1972.29	ARRESTER LPC 15012-1 0-30V DC OR 0-24V AC RATED AT 15 AMP
020-0025595	1	20.72	1	20.72	WRENCH DWG 55393-3 GR1 "E" TERMINAL POST NUT GRS CAT
020-0053360	1	406.56	3	1219.68	CHARGER BATTERY ELC 12/20 S 20 AMP 10-19.9 VDC ROTARY SW
020-0053510	1	254.11	1	254.11	KIT 240V AC EMERGENCY GENERATOR CABLE AND
020-0055608	1	21.22	1	21.22	RELAY POTTER BRUMFIELD KRP11AG12 OR STRUTHERS-DUNN
020-0056515	1	3.07	1	3.07	SOCKET RELAY 8 PIN OCTAL FOR NON VITAL RELAY CSX SS705 REF
020-0064060	1	16.12	1	16.12	PLATE RELAY MOUNTING FOR 2 EACH TYPE KHAU OR OCTAL RELAY
020-0660077	1	597.41	1	597.41	ARRESTER GE 9L10KAC213 FOR 240 VOLT SINGLE PHASE 3 WIRE
020-0750090	1	0.09	3	0.27	NUT INSULATED USE ON AAR BINDING POST TERMINAL FOR
020-0770060	1	16.80	8	134.40	ARRESTER US&S N451552-0201 TRACK SERIES RED LABEL USGA
020-0770105	1	22.40	2	44.80	ARRESTER HARMON 202217-000 AGE-1 TRACK AIR GAP EQUALIZER
020-1940055	1	14.22	1	14.22	CONTAINER CIRCUIT PRINT 24" SCHEDULE 20 4" PVC PIPE WITH
020-2501400	1	987.92	1	987.92	CONTROLLER DTMF RADIO KEY DOWN MODE 6 SET TIMER TO 60
020-2532515	1	32.48	1	32.48	MODULE RESISTOR ISLAND OUTPUT RESISTIVE LOAD ASSEMBLY 560
020-2552664	1	9827.84	1	9827.84	PREDICTOR 250810-2200 HXP-3R 8 KHZ RSI HARMON SINGLE TRACK
020-3430110	1	321.84	1	321.84	RELAY SAFETRAN 400004 500 OHMS CONTACTS 4FB-2F-1B CSX
020-3430115	1	421.20	1	421.20	RELAY SAFETRAN 400005 500 OHMS CONTACTS 4FB HEAVY DUTY
020-3430135	1	513.30	1	513.30	RELAY SAFETRAN 400213 460 OHMS CONTACTS 2FB CSX

Shop Material List for CSX Project: IL2012021 (Effective: 06/14/2012)
INSTALL FLS&G W/HXP-3R
LAPLACE, IL - BD 264.45

Catalog Num	Cond	Unit Price	Qty	Cost	Description
020-3430170	1	413.95	1	413.95	RELAY SAFETRAN 400800-CSX 100/100 OHMS CONTACTS 6FB
020-3430185	1	431.55	1	431.55	RELAY SAFETRAN 400700-X 60 OHMS CONTACTS 4FB CSX
020-4200100	1	7.45	3	22.35	CONNECTOR BUS 1" CENTERS 1/2" X 36" 18 GAGE PUNCHED 1/4" X
020-4200340	1	1.74	8	13.92	LINK TEST ASSEMBLY 1" CENTERS COMPLETE WITH INSULATED
020-4200350	1	2.06	6	12.36	LINK TEST ASSEMBLY 2-3/8" CENTERS COMPLETE WITH
020-4201045	1	0.15	300	45.00	NUT HEX CLAMP (FLAT NUT) AAR 14.1.11-7 14-24 NS-2 THD FLAT
020-8000067	1	14.61	2	29.22	LOCK AMERICAN H10SIGRA CSX SIGNAL PADLOCK WITH BLACK
020-8100031	1	23.82	1	23.82	CABLE EVENT RECORDER HARMON HAWK NETWORK CABLE USED WITH
020-8100044	1	3906.57	1	3906.57	RECORDER EVENT HAWK INCLUDES ETHERNET MODEM AND CURRENT
022-8005160	1	594.61	1	594.61	KIT CDMA AND VHF RADIO MATERIAL FOR USE WITH CSX

Total Cost: $ 29,744.15

Estimate ID: 120373

Field Material List for CSX Project: IL2012021 (Effective: 06/14/2012)
INSTALL FLS&G W/HXP-3R
LAPLACE, IL - BD 264.45

Catalog Num	Cond	Unit Price	Qty	Cost	Description
020-0013908	1	7.31	350	2558.50	CABLE UG COMPOSITE 19 CONDUCTOR INCLUDES 13
020-0052475	1	11.20	4	44.80	ARM EXTENSION 10-1/2" ALUM WITH 3/8" DIAMETER MOUNTING
020-0053066	1	4.59	12	55.08	BOND WEB OF RAIL TRACK CONNECTOR 3/16" DIA X 1" TAB
020-0053220	1	2.64	150	396.00	CABLE POWER UG 3 COND NO 6 AWG - SHOW LENGTH ON EACH
020-0054075	1	1006.88	2	2013.76	GATE SAVER COMPLETE WITH SHEAR PIN AND RETURN SPRING
020-0056626	1	7663.77	1	7663.77	SIGNAL 0229-L GCWD GATE ASSY DWG SS222 INCLS ADJ 19 TO 28
020-0056678	1	6124.91	1	6124.91	SIGNAL 0221-L GCWD GATE ASSY DWG SS222 INCLS ADJ 19 TO 28
020-0057275	1	1.07	350	374.50	WIRE UG TRACK TWISTED PAIR NO. 6 AWG SOLID CONDUCTOR
020-1020095	1	1678.83	1	1678.83	PLATFORM HIGHWAY CROSSING ACCESS FOUNDATION COMPLETE
020-1040322	1	150.52	29	4365.08	BATTERY SAFT SPL165, 165 AH POCKET PLATE NICKEL CADMIUM
020-1040540	1	31.36	4	125.44	TRAY BATTERY FIBER CO 82687-1-P 12" WIDTH 24" LONG
020-1040550	1	45.92	1	45.92	TRAY BATTERY FIBER CO 82687-3-P 12" WIDTH 38"
020-1150750	1	0.95	200	190.00	BOND STRAND 3/16" DIA 7 STRANDS OF 19 STR EACH 6 WITH
020-1360014	1	851.77	1	851.77	PACKAGE FOREMANS CARE FOR ALUMINUM TYPICAL BOM FOR USE
020-1360016	1	21.18	1	21.18	PACKAGE SAFETY & SECURMENT WITH 1 EA CAUTION TAG 1 EA
020-1360103	1	1387.37	1	1387.37	LAYOUT METER SERVICE WITH 25’ POLE CSX DWG SS351 SH 2 ITEMS
020-2060078	1	9.50	1	9.50	BOLT 1" - 8 X 8" INCLUDES NUT AND 3 FLAT WASHERS, USE ON
020-3263656	1	1.77	4	7.08	SLEEVE BONDSTRAND 3/16" TO 3/16" 100 PER BOX, NICOPRESS
020-3901895	1	92.68	2	185.36	TIP FLEX HWY CROSSING GATE 24 IN LONG ENGINEERING GRADE RED
020-3920200	1	181.17	2	362.34	BELL GCWD ELECTRONIC 4" OR 5" MAST 8 TO 13 VOLTS DC GSI PN
020-3930010	1	3.70	2	7.40	KIT GATE ARM WARNING STICKER KIT INCLUDES 1-EA 5"X3"
020-4200340	1	1.74	31	53.94	LINK TEST ASSEMBLY 1" CENTERS COMPLETE WITH INSULATED
020-4200900	1	0.30	6	1.80	CONNECTOR SHEATHING AMP 329860 FOR NO. 14 WIRE
020-4201042	1	0.15	40	6.00	NUT HEX BINDING (RSA NUT) AAR 14.1.11-6 14-24 NS-2 THD CONE
020-4201043	1	0.12	250	30.00	NUT HEX CLAMP (FLAT NUT) AAR 14.1.11-7 14-24 NS-2 THD FLAT

Field Material List for CSX Project: IL2012021 (Effective: 06/14/2012)
INSTALL FLS&G W/HXP-3R
LAPLACE, IL - BD 264.45

Catalog Num	Cond	Unit Price	Qty	Cost	Description
020-4201044	1	0.11	200	22.00	WASHER AAR 14.1.11 ROUND COPPER NICKEL PLATED FOR AAR
020-7300030	1	189.28	2	378.56	BRACKET BELL FITS SAFETRAN JUNCTION BOX MOUNT, 5" BENT
020-9999991	1	100.00	1	100.00	BLOCKING AND BRACING FOR PROJECTS BURCO DIST
250-0001827	1	14.40	1	14.40	BREAKER CIRCUIT SQ D QO235
250-1680406	1	3.38	80	270.40	CONDUIT LIQUID TIGHT 3/4" FLEXIBLE GREY PVC CARLON P/N
250-1680408	1	1.16	80	92.80	CONDUIT LIQUID TIGHT 3/4" NON-METALLIC ORANGE PVC
360-0006100	1	35.07	1	35.07	STOOL STEP WOOD 14"X 20" SIGNAL MAINTAINERS CSXT
360-0800145	1	5.10	1	5.10	BROOM WAREHOUSE CORN HVY DUTY ID300

Total Cost: $ 29,478.66

Consumables List for CSX Project: IL2012021 (Effective: 06/14/2012)
INSTALL FLS&G W/HXP-3R
LAPLACE, IL - BD 264.45

Catalog Num	Cond	Unit Price	Qty	Cost	Description
N/A		50.00	40	2000.00	FILL MATERIAL, 1 CUBIC YARD
N/A		500.00	1	500.00	RAVEN AIR-LINK
N/A		800.00	1	800.00	WALKWAY ROCK, 10 CUBIC YARDS
013-5000245	1	1184.13	4	4736.52	JOINT INSULATED 136RE 40'-0" EPOXY BONDED ASSEMBLED WITH
020-0017605	1	0.31	350	108.50	WIRE CASE 10 AWG FLEX CSX SPEC SS796 OKONITE
020-0017607	1	0.73	500	365.00	WIRE CASE TW PR NO 10 AWG FLEX CSX SPEC SS796 TWIST 2
020-0017625	1	0.47	150	70.50	WIRE CASE TW PR NO 14 AWG FLEX CSX SPEC SS796 TWIST 2
020-0017630	1	0.15	200	30.00	WIRE CASE NO 16 AWG FLEX CSX SPEC SS796 FURN 1000 FT SPOOL
020-0017635	1	0.80	130	104.00	WIRE SIGNAL DEL 018 NO 6 COPPER STRANDED SINGLE
020-0028610	1	0.23	100	23.00	TERMINAL RING AMP 35628 YELLOW PLASTI-BOND HVY DUTY
020-1710045	1	2.42	250	605.00	CONDUIT SDR 13.5 4" POLYETHYLENE TRENCHLESS
020-2060072	1	465.00	2	930.00	FOUNDATION HELICAL SCREW-IN ASSEMBLY 7' X 10", USED FOR
020-2060074	1	366.00	2	732.00	EXTENSION 10" X 3' USE WITH XING GATE AND SIGNAL MAST
020-3261970	1	9.41	2	18.82	DECAL ASSY 2" BLACK PRESSURE SENSITIVE VINYL PRE-MASKED
020-4200880	1	0.53	2	1.06	CONNECTOR TERMINAL 2-3/8" CENTERS AAR 14.1.15-4 NICKEL
020-4200892	1	0.44	27	11.88	CONNECTOR TERMINAL 1" CENTERS AAR 14.1.15-3 NICKEL PLATED
020-4251190	1	0.14	120	16.80	TERMINAL RING AMP 35627 BLACK PLASTI-BOND WIRE SIZE 10-12
020-4251290	1	0.53	30	15.90	TERMINAL WIRE AMP 322051 BLUE WIRE SIZE NO 6 AWG 1/4" STUD
020-4251295	1	0.53	6	3.18	TERMINAL WIRE AMP 322007 BLUE WIRE SIZE NO 6 AWG 3/8" STUD
020-9999992	1	50.00	1	50.00	HOUSE, SIGNAL HANDLING CHARGE, BURCO DISTRIBUTION
022-5290559	1	364.00	1	364.00	CONVERTER WILMORE INPUT 10V DC TO 16V DC OUTPUT 13.6V DC
280-8020180	1	56.93	8	455.44	WELD FIELD COMPLETE 136RE RAILTECH BOUTET P/N
450-0019212	1	0.40	100	40.00	SCREW 10 X 1" SHT METAL PAN HD TYPE A COARSE THREAD

Total Cost: $ 11,981.6

Estimate ID: 120373

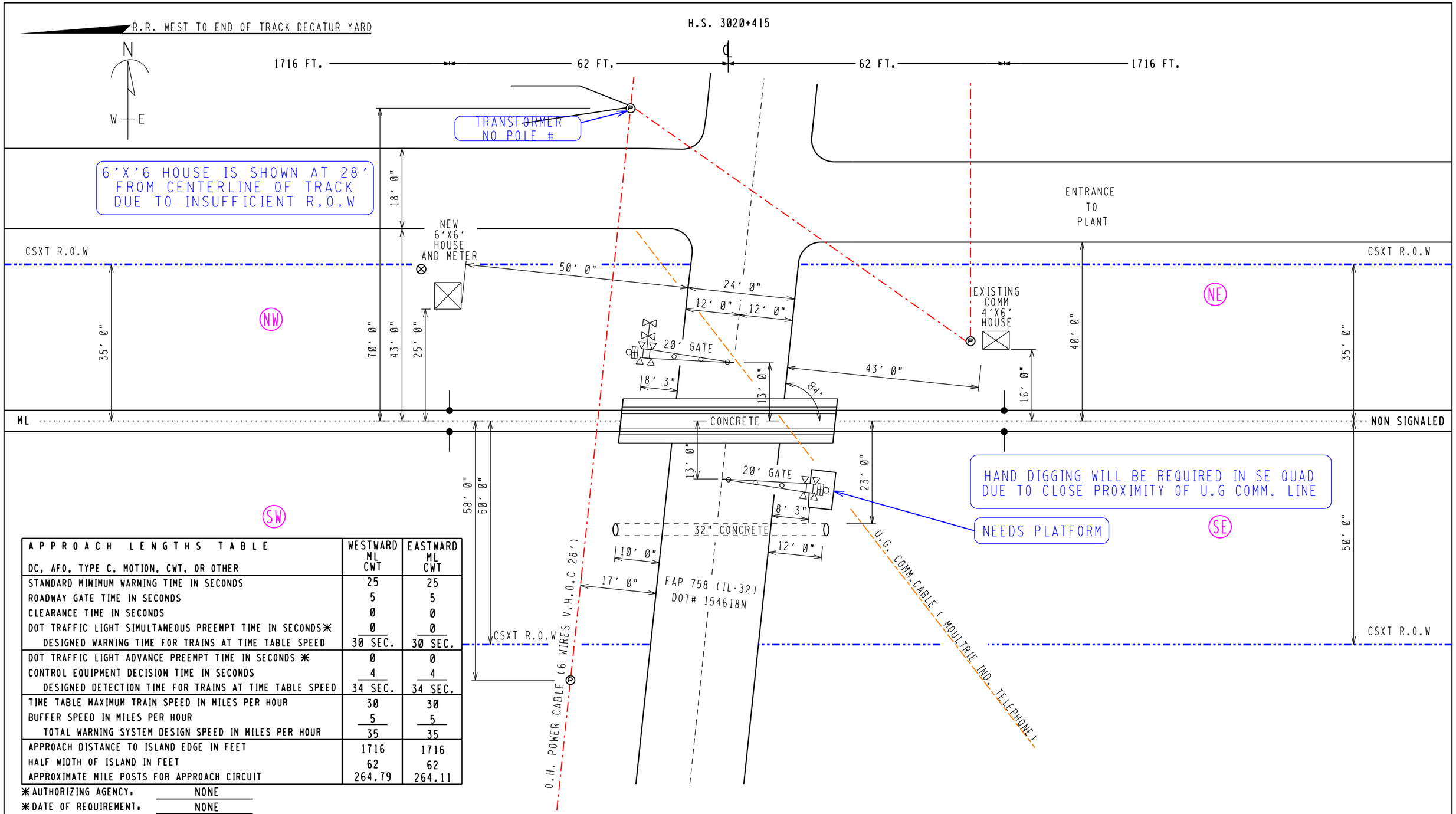

APPROACH LENGTHS TABLE DC, AFO, TYPE C, MOTION, CWT, OR OTHER	WESTWARD ML CWT	EASTWARD ML CWT
STANDARD MINIMUM WARNING TIME IN SECONDS	25	25
ROADWAY GATE TIME IN SECONDS	5	5
CLEARANCE TIME IN SECONDS	0	0
DOT TRAFFIC LIGHT SIMULTANEOUS PREEMPT TIME IN SECONDS ✱	0	0
DESIGNED WARNING TIME FOR TRAINS AT TIME TABLE SPEED	30 SEC.	30 SEC.
DOT TRAFFIC LIGHT ADVANCE PREEMPT TIME IN SECONDS ✱	0	0
CONTROL EQUIPMENT DECISION TIME IN SECONDS	4	4
DESIGNED DETECTION TIME FOR TRAINS AT TIME TABLE SPEED	34 SEC.	34 SEC.
TIME TABLE MAXIMUM TRAIN SPEED IN MILES PER HOUR	30	30
BUFFER SPEED IN MILES PER HOUR	5	5
TOTAL WARNING SYSTEM DESIGN SPEED IN MILES PER HOUR	35	35
APPROACH DISTANCE TO ISLAND EDGE IN FEET	1716	1716
HALF WIDTH OF ISLAND IN FEET	62	62
APPROXIMATE MILE POSTS FOR APPROACH CIRCUIT	264.79	264.11

✱AUTHORIZING AGENCY, NONE
✱DATE OF REQUIREMENT, NONE
✱AMOUNT OF TIME (SEC.), NONE

PRODUCED FOR,
CSX TRANSPORTATION
RAIL TRANSPORT GROUP ENGINEERING
COMMUNICATIONS AND SIGNALS

PRODUCED BY,
xorail
5011 GATE PARKWAY,
BUILDING 100 SUITE 400
JACKSONVILLE, FL 32256

LEGEND			GPS COORDINATES	REVISION DATES
CSX ROW	GUARD RAIL	METER SERVICE ⊗		
R/R POLELINE	O.H. POWER	POLE Ⓟ	39°47'58" N	- -
GAS	FENCE	FIRE PLUG Ⓕ	88°43'11" W	- -
FIBER OPTIC	WATER	SEWER CAP Ⓢ	ELEV. 726'	- -
	SEWER	GAS VENT Ⓥ		- -

FILE NAME: BD26445.H01
DATE DRAWN: 05-18-2012
DRAWN BY: KPS
CHECKED BY: XRL
XRL #: CXS1230612

STREET NAME: FAP 758 (IL-32) M.P. BD-264.45
CITY & STATE: LAPLACE, IL
DOT: 154618N
PROJECT #: IL2012021
OP #: IL0373

PROPOSED CROSSING LAYOUT
SCALE = 20:1

INDEX

CONTENTS

SH. NO.		REVISION NO. 1	2	3	4	5	6	7	8	9
I01	INDEX AND REVISIONS	╱								
S01	TRACK AND SIGNAL PLAN	╱								
E01	POWER DISTRIBUTION	╱								
C01	CROSSING DETECTION CIRCUITRY	╱								
C02	DETECTION DEVICE PROGRAM	╱								
C03	CROSSING WARNING DEVICE GATE CIRCUITRY	╱								
C04	CROSSING WARNING DEVICE LIGHT CIRCUITRY	╱								
C05	RECORDER AND DTMF CONTROLLER CIRCUITS	╱								
C06	RECORDER PROGRAM	╱								

╱ = DESIGN COMPLETED

╳ = REVISION COMPLETED

= NOTE

NEW WORK

CXD1230844 IL2012021

06-08-12 XRL/K.SINGH/PRR

xorail

PMD3RCPML.I01
REV. 09-30-10

REVISIONS

REV. NO.	PROJECT NO.	DESIGN DATE	IN SERVICE DATE	REVISION DATE
1	IL2012021	06-08-12		

TO BE COMPLETED ON A.I.S.

CSX TRANSPORTATION

RAIL TRANSPORT GROUP ENGINEERING
COMMUNICATIONS AND SIGNALS

FAP ROUTE 758 (IL-32) 154618N

INDEX AND REVISIONS
LAPLACE, IL M.P. BD-264.45

DESIGNED	DIGITIZED	CHECKED	DATE
XRL/KPS	XRL/KPS	XRL	06-08-12

DESIGN DATE	REV. NO.	DRAWING	SHEET NO	FILE	SHEET
06-08-12	1	-----	-----	BD26445	I01

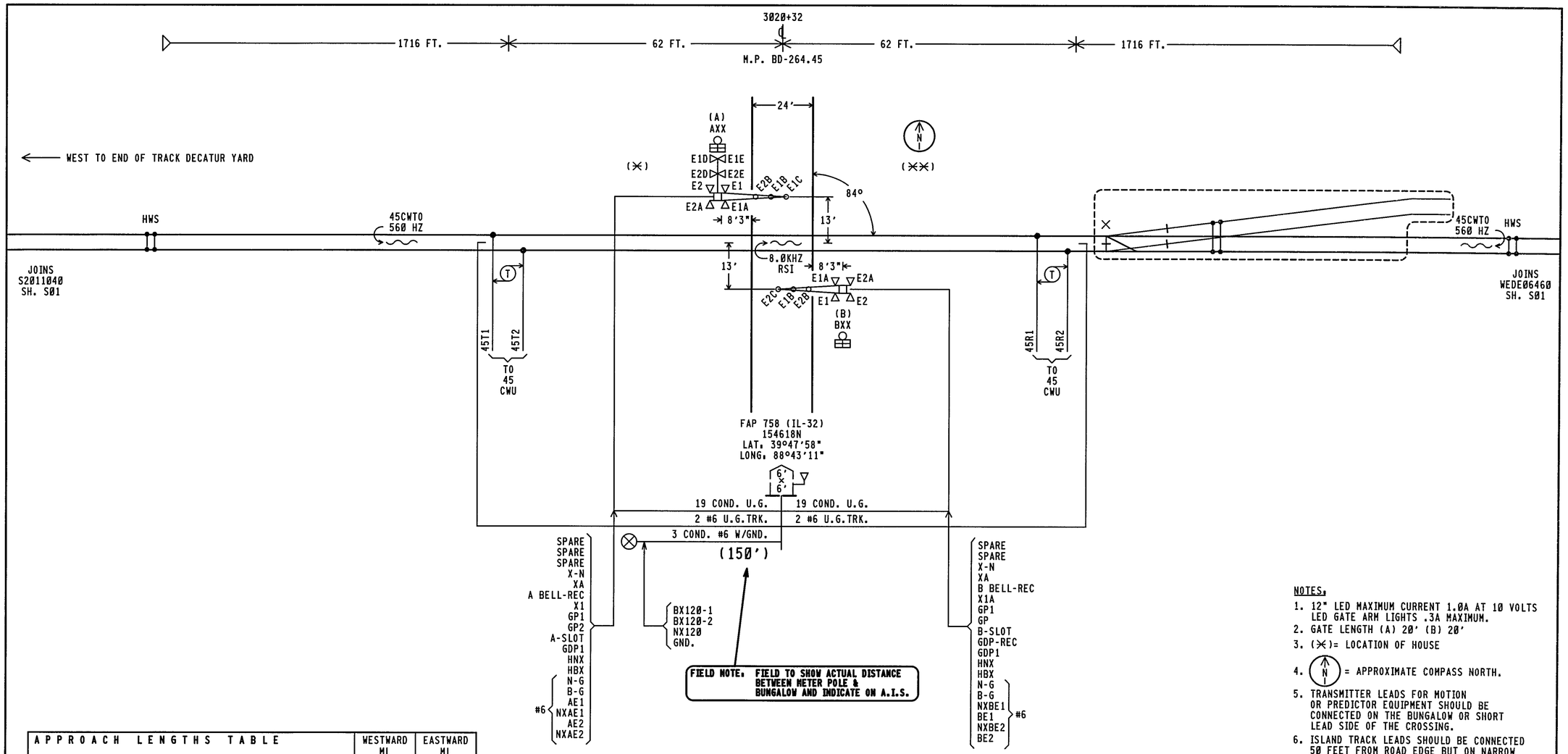

APPROACH LENGTHS TABLE DC, AFO, TYPE C, MOTION, CWT, OR OTHER	WESTWARD ML CWT	EASTWARD ML CWT
STANDARD MINIMUM WARNING TIME IN SECONDS	25	25
ROADWAY GATE TIME IN SECONDS	5	5
CLEARANCE TIME IN SECONDS	0	0
DOT TRAFFIC LIGHT SIMULTANEOUS PREEMPT TIME IN SECONDS✳	0	0
DESIGNED WARNING TIME FOR TRAINS AT TIME TABLE SPEED	30 SEC,	30 SEC,
DOT TRAFFIC LIGHT ADVANCE PREEMPT TIME IN SECONDS ✳	0	0
CONTROL EQUIPMENT DECISION TIME IN SECONDS	4	4
DESIGNED DETECTION TIME FOR TRAINS AT TIME TABLE SPEED	34 SEC,	34 SEC,
TIME TABLE MAXIMUM TRAIN SPEED IN MILES PER HOUR	30	30
BUFFER SPEED IN MILES PER HOUR	5	5
TOTAL WARNING SYSTEM DESIGN SPEED IN MILES PER HOUR	35	35
APPROACH DISTANCE TO ISLAND EDGE IN FEET	1716	1716
HALF WIDTH OF ISLAND IN FEET	62	62
APPROXIMATE MILE POSTS FOR APPROACH CIRCUIT	264.79	264.11

✳AUTHORIZING AGENCY. NONE
✳DATE OF REQUIREMENT. NONE
✳AMOUNT OF TIME (SEC.). NONE

NOTES.

1. 12" LED MAXIMUM CURRENT 1.0A AT 10 VOLTS LED GATE ARM LIGHTS .3A MAXIMUM.
2. GATE LENGTH (A) 20' (B) 20'
3. (✳)= LOCATION OF HOUSE
4. (N) = APPROXIMATE COMPASS NORTH.
5. TRANSMITTER LEADS FOR MOTION OR PREDICTOR EQUIPMENT SHOULD BE CONNECTED ON THE BUNGALOW OR SHORT LEAD SIDE OF THE CROSSING.
6. ISLAND TRACK LEADS SHOULD BE CONNECTED 50 FEET FROM ROAD EDGE BUT ON NARROW ROADS (20' OR LESS) ISLAND LENGTH SHALL BE 120 FEET.
7. WARNING SYSTEM APPROACH CIRCUIT DISTANCES ARE TO BE MEASURED FROM THE ISLAND TRACK CONNECTIONS.
8. (✳✳) =LOCATION OF COMM. HOUSE

= EXISTING
= NOTE
✳✳✳ = OUT

NEW WORK
CXD1230844 IL2012021
06-08-12 XRL/K.SINGH/PRR
xorail

CSX TRANSPORTATION
RAIL TRANSPORT GROUP ENGINEERING
COMMUNICATIONS AND SIGNALS

FAP ROUTE 758 (IL-32) 154618N

TRACK AND SIGNAL PLAN
LAPLACE, IL M.P. BD-264.45

PMD3RCPML.S01
REV. 09-30-10

DESIGNED	DIGITIZED	CHECKED	DATE
XRL/KPS	XRL/KPS	XRL	06-08-12

DESIGN DATE	REV. NO.	DRAWING	SHEET NO	FILE	SHEET
06-08-12	1	-----	-----	BD26445	S01 (A)

TOP ROW

XR			XPR			GPR			EOR			POR			DTMFR		
12	FB	B8	22	F	B36	12	B	B82	12	FB	B81	12	FB	B62	1	B	N30
15	FB	C30	25	F	C30	15	B	C30	15	FB	C30	15	FB	C30	8	F	C45
22						22			32	FB		22	FB				C46
23						25			35	FB		25	FB				
25	F					32	F					32	F				
32						35	B					35					
35																	

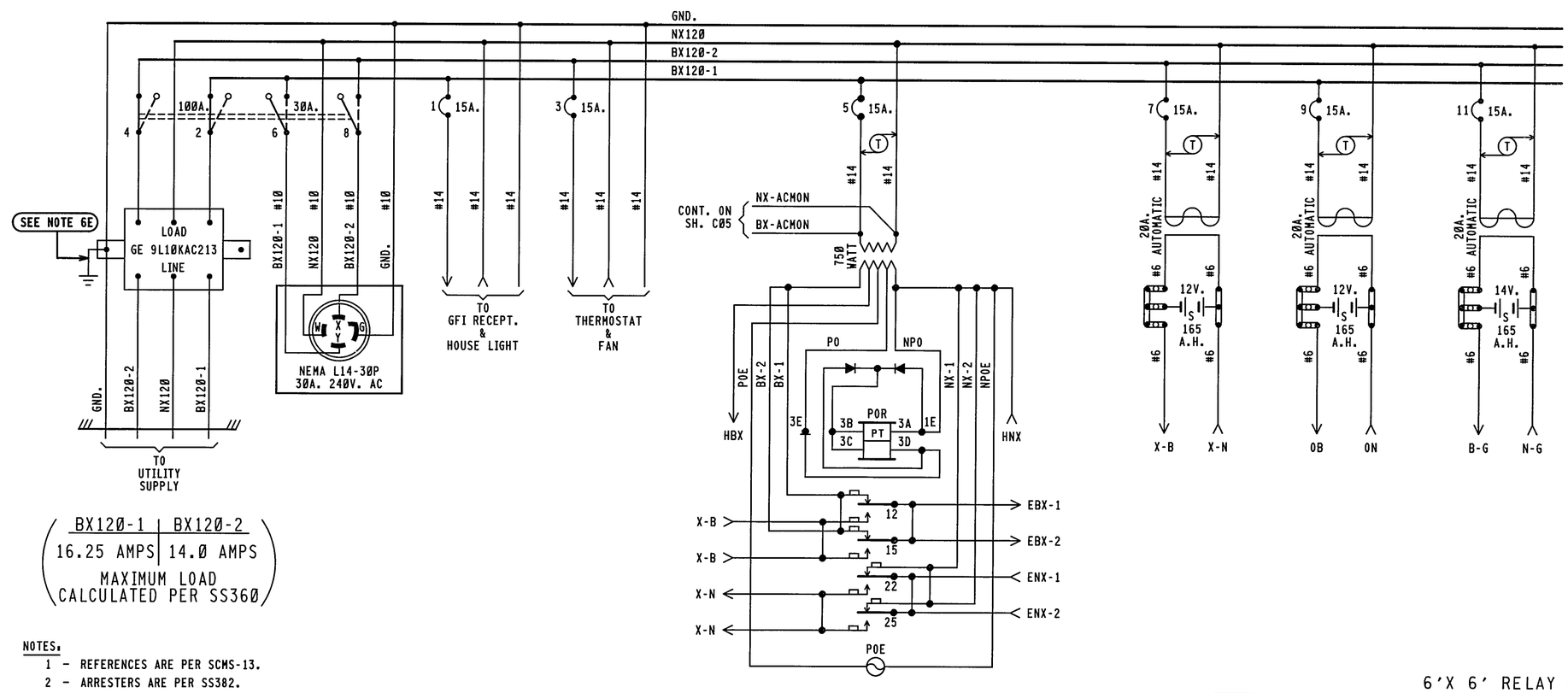

BX120-1	BX120-2
16.25 AMPS	14.0 AMPS

MAXIMUM LOAD
CALCULATED PER SS360

NOTES:

1 - REFERENCES ARE PER SCMS-13.
2 - ARRESTERS ARE PER SS382.
3 - SHELF RELAY PLACEMENT ON CONSIST CHART HAS NO SIGNIFICANCE.
4 - PLUG-IN RELAYS ARE VIEWED FROM THE FRONT OF RACK.
5 - BATTERY A.H. CAPACITY SHOWN IS THE MINIMUM REQUIREMENT.
6 - WIRING
  A - FEED TO ALL BUSSES, LIGHT CIRCUITS,MOTOR CIRCUITS TO BE #10 FLEX.
  B - 120-VOLT FEED FROM ENTRANCE TO POWER BUSS TO BE #10 FLEX.
  C - ALL TRACK WIRES TO BE #10 FLEX.
  D - ALL OTHERS TO BE #16 FLEX UNLESS NOTED.
  E - GROUND WIRE NOT NECESSARY WHEN GE ARRESTER IS MOUNTED ON GROUND PLANE OR METAL ENCLOSURE AFFIXED DIRECTLY TO BUNGALOW METALLIC STRUCTURAL MEMBER.
7 - CIRCUIT INTERRUPTERS 2 & 4 ARE MECHANICALLY INTERLOCKED WITH CIRCUIT INTERRUPTERS 6 & 8.

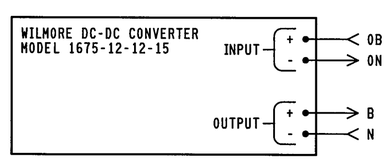

= NOTE
= OUT

NEW WORK
CXD1230844 IL2012021
06-08-12 XRL/K.SINGH/PRR
xorail

6'X 6' RELAY HOUSE W/FARADAY SHIELD

CSX TRANSPORTATION
RAIL TRANSPORT GROUP ENGINEERING
COMMUNICATIONS AND SIGNALS

FAP ROUTE 758 (IL-32) 154618N

POWER DISTRIBUTION
LAPLACE, IL M.P. BD-264.45

PMD3RCPML.E01H
REV. 09-30-10

DESIGNED	DIGITIZED	CHECKED	DATE
XRL/KPS	XRL/KPS	XRL	06-08-12

DESIGN DATE	REV. NO.	DRAWING	SHEET NO	FILE	SHEET
06-08-12	1	-----	-----	BD26445	E01 A

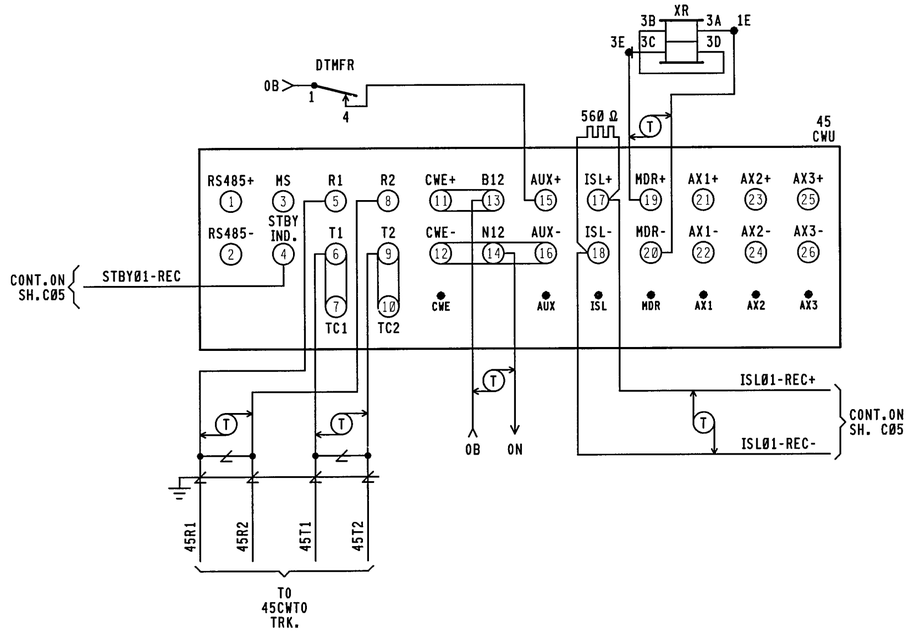

45CWU
HXP-3R MODULES REQUIRED

(NOT INSTALLED)	RMM MODULE (RECORDER MEMORY)
SIM MODULE (SERIAL INTERFACE)	
SIM MODULE (SERIAL INTERFACE)	
TRM MODULE (TRANSCEIVER)	
TRM MODULE (TRANSCEIVER)	
RSI MODULE (ISLAND)	
RSI MODULE (ISLAND)	
RYD MODULE (RELAY DRIVE)	
RYD MODULE (RELAY DRIVE)	
CPU MODULE (CENTRAL PROCESSOR UNIT)	
CPU MODULE (CENTRAL PROCESSOR UNIT)	
TLM MODULE (TRANSFER LOGIC)	
(NOT INSTALLED) AXD MODULE	
(NOT INSTALLED) AXD MODULE	

FRONT VIEW

RSI MODULE
226736-000 8.0KHZ

ISLAND FREQ.
8.0KHZ

NORMAL RSI JUMPERS

STANDBY RSI JUMPERS

LOS 0
LOS 1
LOS 2
FAULT 0
FAULT 1

45
CWU

CABINET SWITCHES
THESE SWITCHES ARE LOCATED ON MOTHERBOARD

MASTER/SLAVE

MASTER — SLAVE

S1

SYSTEM CONFIGURATION				
S6 & S7 DIP SWITCH POSITIONS				
SWITCH	1	2	3	4
SWITCH POSITION	ON	OFF	OFF	OFF
APPROACH.	NORMAL		(NOT USED)	

	FREQUENCY SELECT					
NORMAL	S2 & S3 DIP SWITCH POSITIONS 560 HZ					
	SWITCH	1	2	3	4	5
	SWITCH POSITION	ON	OFF	OFF	OFF	ON
STANDBY	S4 & S5 DIP SWITCH POSITIONS 560 HZ					
	SWITCH	1	2	3	4	5
	SWITCH POSITION	ON	OFF	OFF	OFF	ON

TLM MODULE
JUMPERS AND SWITCHES

(TOGGLE MODE)
STANDBY ONLY — W1 — 3 2 1 (✱)

(ENABLE MODE)
ISL 1 DISABLE — W2 — 3 2 1 (✱)

NOTE.
PIN 1 IS IDENTIFIED BY ASTERICK BELOW IT.
(☆) = MAY BE SET PER FIELD CONDITIONS.

MINUTE TIMEOUT SWITCH

SETTING	(☆) 9 MINUTES	S1

S2 — STANDBY — AUTO — NORMAL

= NOTE
~~XXX~~ = OUT

NEW WORK
CXD1230844 IL2012021
06-08-12 XRL/K.SINGH/PRR
xorail

CSX TRANSPORTATION
RAIL TRANSPORT GROUP ENGINEERING
COMMUNICATIONS AND SIGNALS

FAP ROUTE 758 (IL-32) 154618N

CROSSING DETECTION CIRCUITRY
LAPLACE, IL M.P. BD-264.45

1TRKHXP3R.C01
REV. 08-31-09

DESIGNED	DIGITIZED	CHECKED	DATE
XRL/KPS	XRL/KPS	XRL	06-08-12

DESIGN DATE	REV. NO.	DRAWING	SHEET NO	FILE	SHEET
06-08-12	1	-----	-----	BD26445	C01 (A)

45CWU

HXP-3R APPLICATION DESIGN CARD

OPTION 90 (CABINET #)	CABINET #

PASSWORD(_ _✳_ _)(SEE MANUAL 100052-001 AA0 1-27	TRACK 1	TRACK 2	DEFAULT
APPROACH LENGTH ADJUSTMENT	1716'	N/A	9,999 FT.
WARNING TIME ADJUSTMENT	30 SEC.	N/A	99 SEC.
LUMPED IMPEDANCE ADJUSTMENT (LIA)	✳	N/A	0
TRANSMITTER CHECK ADJUSTMENT (TC)	✳	N/A	0
MOTION DETECT RESTART (MD RESTART)	0 ☆	N/A	99%
OPTION 1 TRACK ENABLE (TK-ENA)	UP	N/A	UP (ALWAYS ENABLED)
OPTION 2 TRACK FREQUENCY (TK F0)	STRAP ◇	N/A	0 HZ
OPTION 3 CONSTANT WARNING/MOTION (CW/MD)	C	N/A	d (Motion)
OPTION 4 UNI/BIDIRECTIONAL (UNI-BI)	b	N/A	b (bi)
OPTION 5 NARROW BAND COMPENSATION (NBS-C)	⊗	N/A	9,999 FT.
OPTION 6 CWE WARNING TIME (CWEWT)	80 SEC.	N/A	80 SEC.
OPTION 7 LOSS OF SHUNT TIME (LOS)	16 SEC.	N/A	16 SEC.
OPTION 8 LOS W/JOINTS NEAR ISLAND (IJ-LOS)	5 SEC. ✳✳	N/A	5 SEC.
OPTION 9 BALLAST COMPENSATION (BC)	✳	N/A	FREQUENCY DEPENDANT ◎
OPTION 10 PHASE COMPENSATION ADJUSTMENT (P-COMP)	~~✳✳✳~~	N/A	0°

AX OPTIONS △		OPTION 11 AX DRIVE #1	OPTION 12 AX DRIVE #2	OPTION 13 AX DRIVE #3	DEFAULT
ITEM 1	TRACK ASSIGNMENT (TK-ASN)	N/A	N/A	N/A	1
ITEM 2	OFFSET DISTANCE TRACK 1 (OF-TK1)	0000'	0000'	0000'	0 FT.
ITEM 3	OFFSET DISTANCE TRACK 2 (OF-TK2)	N/A	N/A	N/A	N/A
ITEM 4	WARNING TIME (WT)	99 SEC.	99 SEC.	99 SEC.	99 SEC.
ITEM 5	MOTION DETECT RESTART (MD-RST)	99 %	99 %	99 %	99 %
ITEM 6	CONSTANT WARNING/MOTION (CW/MD)	d	d	d	d (Motion)
ITEM 7	CLEAR JOINTS LOS (CJ-LOS)	00 SEC.	00 SEC.	00 SEC.	0 SEC.
ITEM 8	POST JOINT DETECTION (PJ-DET)	15 SEC.	15 SEC.	15 SEC.	15 SEC.
ITEM 9	POST JOINT RX (PJ-RX)	15	15	15	15
ITEM 10	POSITIVE START	dn	dn	dn	dn

OPTION 17 MDR DRIVE OR AX RELAY DRIVE SELECTION (MDR-AX)		◎	N/A	dn (STATUS ONLY) ◎
OPTION 17 SUB-MENU		TRACK 1	TRACK 2	DEFAULT
ITEM 1	MDR-AX OFFSET DISTANCE TRK. 1(OF-TK1) & TRK. 2(OF-TK2)	0000'	N/A	0 FT.= CONFIGURED AS MDR
ITEM 2	MDR-AX CLEAR JOINT LOS TIME (CJ-LOS)	00 SEC.	N/A	0 SEC.
ITEM 3	MDR-AX POST JOINT DETECTION TIME (PJ-DET)	15 SEC.	N/A	15 SEC.
ITEM 4	POST JOINT RX (PJ-RX)	15	N/A	15 (0 = DISABLE)
OPTION 18 MOTION DETECTOR TIMER (MD-TMR)		10 MIN.	N/A	10 MIN. (0 = DISABLE)
OPTION 19 MINIMUM WARNING TIME WITH ADVANCED PREEMPTION (MIN-WT)		00 SEC.	N/A	00 SEC. (0 = DISABLE)
OPTION 20 FALSE SHUNT TIMER ADJUSTMENT (FS-TMR)				
ITEM 1	FALSE SHUNT RX (FS-RX)	0	N/A	0, 0 = DISABLE
ITEM 2	FALSE SHUNT TIMER ADJUSTMENT (FS-TM)	10	N/A	10
OPTION 21 POSITIVE START RX & TIMER ADJUSTMENT (POS-ST)				
ITEM 1	POSITIVE START RX (POS-RX)	0	N/A	0, 0 = DISABLE
ITEM 2	POSITIVE START TIMER (POS-TM)	10	N/A	10
OPTION 22 APPROACH RELEASE RX (AR-TM)				
ITEM 1	APPROACH RELEASE RX (AR-RX)	0	N/A	0, 0 = DISABLE
ITEM 2	APPROACH RELEASE TIMER (AR-TM)	10	N/A	10
OPTION 47 AUTO RX ADJUSTMENT (ATO-RX)		dn	N/A	dn = DISABLE
OPTION 48 PREDICTIVE FILTER ENABLE/DISABLE (PF-ENA)		dn	N/A	dn = DISABLE
OPTION 49 RESET LOCAL PARAMETERS TO DEFAULT SETTINGS (RESET)				PAGE 3-14 & 3-41
OPTION 50 RECORDER PRINTER CONTROL (PRNTR)		✥		PAGE 1-47 & 3-41
OPTION 51 CLOCK ADJUSTMENT (CLOCK)		⊕		PAGE 3-32
OPTION 70 LOCAL SERIAL I/O PORT ADJUSTMENT (LSP)				
ITEM 1	BAUD RATE	38.4	✥	PAGE 1-47 & 3-42
ITEM 2	DBITS (DATA BITS)	8	✥	PAGE 1-47 & 3-42
ITEM 3	PA (PARITY)	NO(-=NO PARITY)	✥	PAGE 1-47 & 3-42
OPTION 90 CABINET NUMBER DISPLAY (CAB)		✳		PAGE 1-47 & 3-41
OPTION 91 HXP-3 OPERATING PROGRAM VERSION NUMBER (VERS)		✳		VERSION 35.0
OPTION 99 RESET PASSWORD TIMER (TIMER)		✥		PAGE 3-30

NOTE:

✳ = ENTRY TO BE DONE ON AS-IN-SERVICE.

☆ = NORMALLY SET AT "0" SEE MANUAL 100052-001 AA0 PG. 1-46 & 3-41.

◇ = THE WORD STRAP IS DISPLAYED WHEN FREQUENCY SELECT DIP SWITCHES USED TO SELECT A STANDARD FREQUENCY.

⊗ = ADJUSTMENT NECESSARY ONLY WHEN AX RELAY DRIVE MODULE USED.

✳✳ = ADJUSTMENT NECESSARY IF INSULATED JOINTS ARE LOCATED NEAR ISLAND CIRCUIT.

~~✳✳✳~~ = ADJUSTMENT NECESSARY ONLY IF VERY POOR BALLAST CONDITIONS NEED TO BE COMPENSATED.

◎ = OPTION 17 SUB-MENU USED ONLY WHEN AX RELAY DRIVE OPERATION IS SELECTED. ENTERING AN OFFSET DISTANCE VALUE OTHER THAN ZERO ASSIGNS A MDR AS AN AX DRIVE.

△ 1. WHEN AXD MODULES ARE NOT INSTALLED, THEIR ASSOCIATED OPTIONS AND ADJUSTMENTS ARE NOT DISPLAYED.
2. PROGRAM UNUSED AX OPTION(S) SAME AS OPTION 11. IF AX OPTION 12 OR 13 IS USED IN FUTURE THEN REPROGRAM AS APPLICABLE.

⊙ = FREQUENCY DEPENDANT, RANGE BETWEEN 50-250 TO BE SUPPLIED ON AS-IN-SERVICE.

✥ = OPTIONS 50-99 ARE NON-VITAL AND NOT REQUIRED FOR INITIAL SETUP. SEE MANUAL 100052-001 AA0. FOR OPTIONS 49 TO 99 SEE PAGES AS LISTED IN DEFAULT COLUMN.

⊕ = SET CORRECT LOCAL TIME AND DATE. TIME OF DAY SHOULD BE SYNCRONIZED WITH TIME SHOWN BY EXTERNAL EVENT RECORDER.

~~✳✳✳~~ = OUT

NEW WORK
CXD1230844 IL2012021
06-08-12 XRL/K.SINGH/PRR
xorail

CSX TRANSPORTATION
RAIL TRANSPORT GROUP ENGINEERING
COMMUNICATIONS AND SIGNALS

FAP ROUTE 758 (IL-32) 154618N

DETECTION DEVICE PROGRAM
LAPLACE, IL M.P. BD-264.45

1TRKHXP3R.C02
REV. 10-31-07

DESIGNED	DIGITIZED	CHECKED	DATE
XRL/KPS	XRL/KPS	XRL	06-08-12

DESIGN DATE	REV. NO.	DRAWING	SHEET NO	FILE	SHEET
06-08-12	1	-----	-----	BD26445	C02 (A)

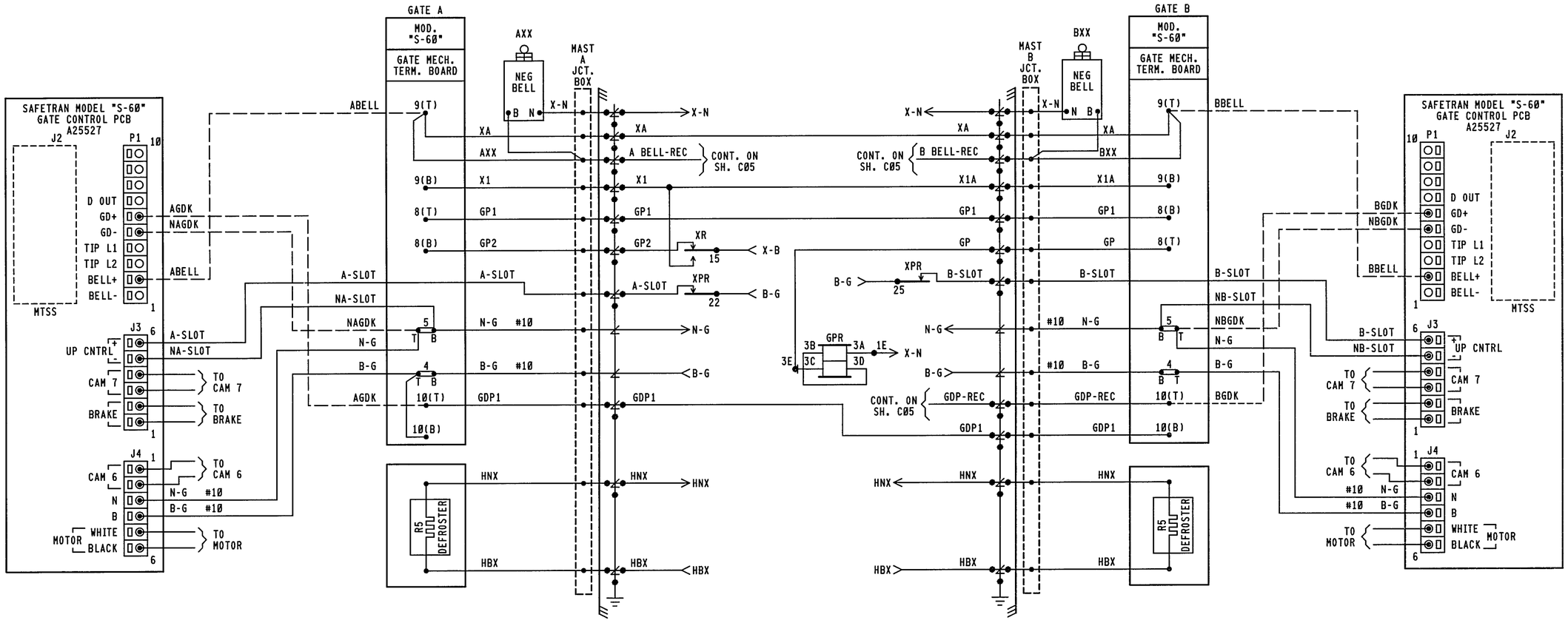

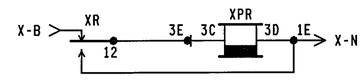

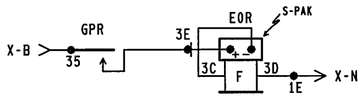

NOTES:

= TERMINAL IN JCT. BOX BASE

XXX = OUT

NEW WORK

CXD1230844 IL2012021

06-08-12 XRL/K.SINGH/PRR

xorail

PMD3RCPML.C03
REV. 09-30-10

CSX TRANSPORTATION

RAIL TRANSPORT GROUP ENGINEERING
COMMUNICATIONS AND SIGNALS

FAP ROUTE 758 (IL-32) 154618N

CROSSING WARNING DEVICE GATE CIRCUITRY
LAPLACE, IL M.P. BD-264.45

DESIGNED	DIGITIZED	CHECKED	DATE
XRL/KPS	XRL/KPS	XRL	06-08-12

DESIGN DATE	REV. NO.	DRAWING	SHEET NO	FILE	SHEET
06-08-12	1	-----	-----	BD26445	C03 (A)

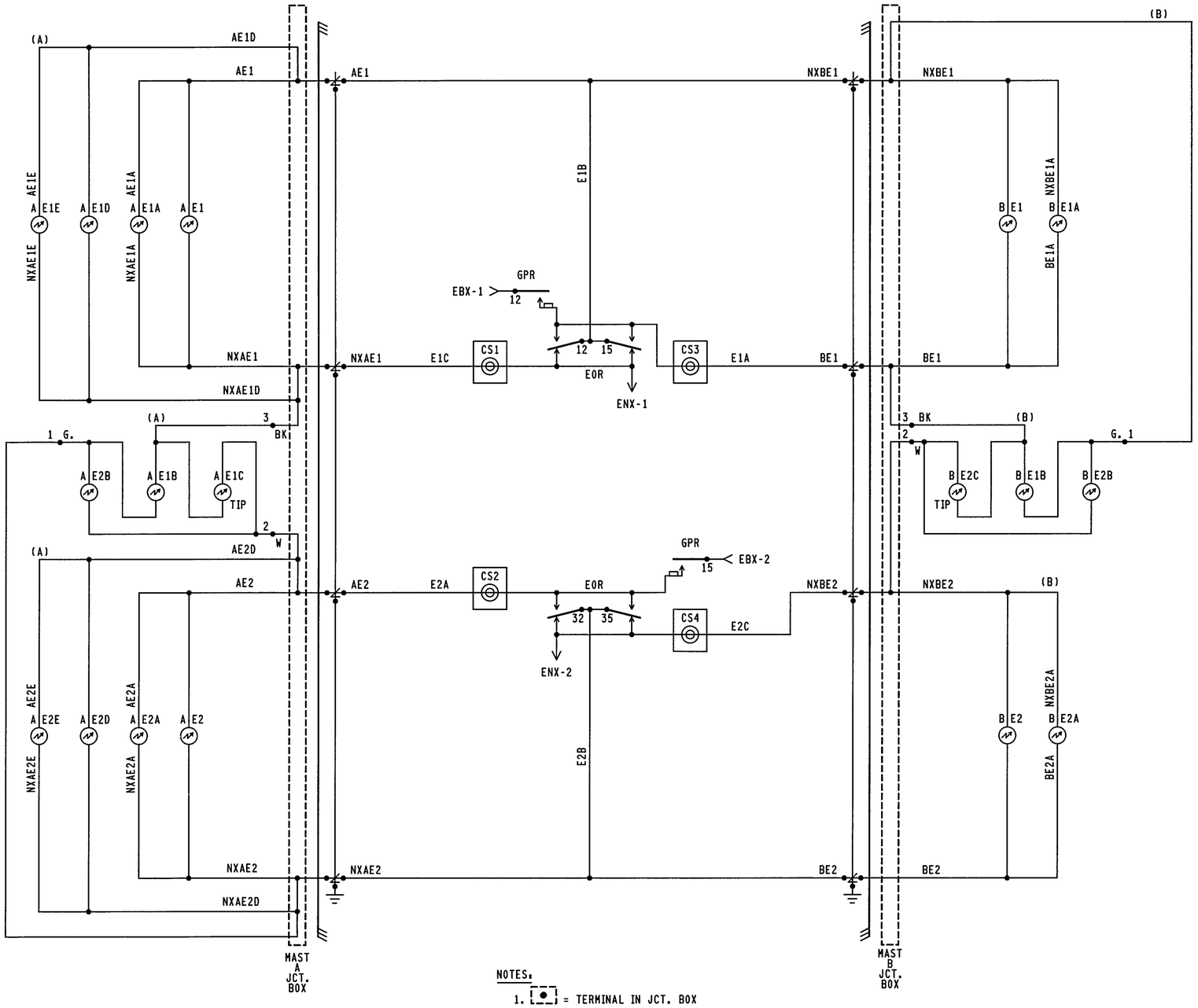

NOTES:

1. [•] = TERMINAL IN JCT. BOX
2. WHEN 7 OR MORE LIGHTS ON A SINGLE STRUCTURE REFER TO SS-382 FOR REQUIRED ARRESTER RATING.

NEW WORK
CXD1230844 IL2012021
06-08-12 XRL/K.SINGH/PRR
xorail

CSX TRANSPORTATION
RAIL TRANSPORT GROUP ENGINEERING
COMMUNICATIONS AND SIGNALS

FAP ROUTE 758 (IL-32) 154618N

CROSSING WARNING DEVICE LIGHT CIRCUITRY
LAPLACE, IL M.P. BD-264.45

PMD3RCPML.C04
REV. 09-30-10

DESIGNED	DIGITIZED	CHECKED	DATE
XRL/KPS	XRL/KPS	XRL	06-08-12

DESIGN DATE	REV. NO.	DRAWING	SHEET NO	FILE	SHEET
06-08-12	1	-----	-----	BD26445	C04

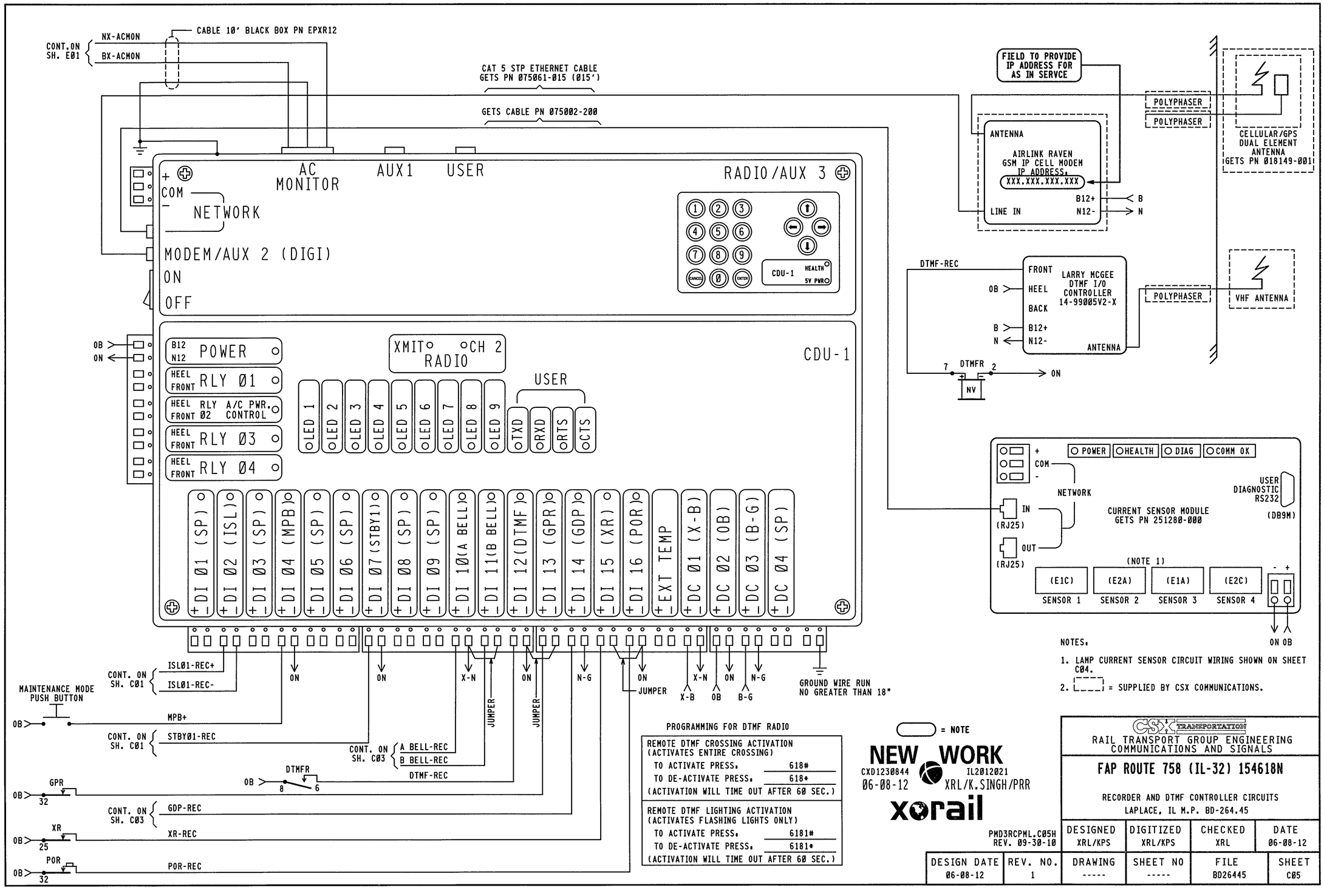
CONT.ON SH. E01
NX-ACMON
BX-ACMON
CABLE 10' BLACK BOX PN EPXR12
CAT 5 STP ETHERNET CABLE GETS PN 075061-015 (015')
GETS CABLE PN 075002-200
FIELD TO PROVIDE IP ADDRESS FOR AS IN SERVCE
POLYPHASER
POLYPHASER
CELLULAR/GPS DUAL ELEMENT ANTENNA GETS PN 018149-001
ANTENNA
AIRLINK RAVEN GSM IP CELL MODEM
IP ADDRESS:
XXX.XXX.XXX.XXX
B12+
LINE IN
N12-
B
N
AC MONITOR
AUX1
USER
RADIO/AUX 3
COM
NETWORK
MODEM/AUX 2 (DIGI)
ON
OFF
CDU-1
HEALTH
5V PWR
DTMF-REC
FRONT
HEEL
BACK
LARRY MCGEE DTMF I/O CONTROLLER 14-99005V2-X
ANTENNA
POLYPHASER
VHF ANTENNA
OB
B12+
N12-
DTMFR
NV
ON
B12
N12
POWER
HEEL FRONT RLY 01
HEEL FRONT RLY 02 A/C PWR. CONTROL
HEEL FRONT RLY 03
HEEL FRONT RLY 04
XMIT
CH 2
RADIO
CDU-1
USER
LED 1
LED 2
LED 3
LED 4
LED 5
LED 6
LED 7
LED 8
LED 9
TXD
RXD
RTS
CTS
DI 01 (SP)
DI 02 (ISL)
DI 03 (SP)
DI 04 (MPB)
DI 05 (SP)
DI 06 (SP)
DI 07 (STBY1)
DI 08 (SP)
DI 09 (SP)
DI 10(A BELL)
DI 11(B BELL)
DI 12(DTMF)
DI 13 (GPR)
DI 14 (GDP)
DI 15 (XR)
DI 16 (POR)
EXT TEMP
DC 01 (X-B)
DC 02 (OB)
DC 03 (B-G)
DC 04 (SP)
POWER
HEALTH
DIAG
COMM OK
COM
NETWORK
IN
(RJ25)
OUT
(RJ25)
CURRENT SENSOR MODULE GETS PN 251280-000
USER DIAGNOSTIC RS232
(DB9M)
(NOTE 1)
(E1C)
(E2A)
(E1A)
(E2C)
SENSOR 1
SENSOR 2
SENSOR 3
SENSOR 4
ON OB
CONT. ON SH. C01
ISL01-REC+
ISL01-REC-
MAINTENANCE MODE PUSH BUTTON
MPB+
STBY01-REC
CONT. ON SH. C03
A BELL-REC
B BELL-REC
DTMF-REC
JUMPER
GPR
GDP-REC
XR
XR-REC
POR
POR-REC
GROUND WIRE RUN NO GREATER THAN 18"
NOTES.
1. LAMP CURRENT SENSOR CIRCUIT WIRING SHOWN ON SHEET C04.
2. = SUPPLIED BY CSX COMMUNICATIONS.
PROGRAMMING FOR DTMF RADIO
REMOTE DTMF CROSSING ACTIVATION (ACTIVATES ENTIRE CROSSING)
TO ACTIVATE PRESS. 618#
TO DE-ACTIVATE PRESS. 618*
(ACTIVATION WILL TIME OUT AFTER 60 SEC.)
REMOTE DTMF LIGHTING ACTIVATION (ACTIVATES FLASHING LIGHTS ONLY)
TO ACTIVATE PRESS. 6181#
TO DE-ACTIVATE PRESS. 6181*
(ACTIVATION WILL TIME OUT AFTER 60 SEC.)
= NOTE
NEW WORK
CXD1230844
06-08-12
IL2012021
XRL/K.SINGH/PRR
xorail
PMD3RCPML.C05H
REV. 09-30-10
CSX TRANSPORTATION
RAIL TRANSPORT GROUP ENGINEERING COMMUNICATIONS AND SIGNALS
FAP ROUTE 758 (IL-32) 154618N
RECORDER AND DTMF CONTROLLER CIRCUITS
LAPLACE, IL M.P. BD-264.45
DESIGNED XRL/KPS
DIGITIZED XRL/KPS
CHECKED XRL
DATE 06-08-12
DESIGN DATE 06-08-12
REV. NO. 1
DRAWING -----
SHEET NO -----
FILE BD26445
SHEET C05

	DEFAULTS AND/OR STYLE	FIELD RECORD
EVENT ANALYZER EXECUTIVE PROGRAM	VERSION 2.7, COMPILED ON NOV. 11, 2003	VERSION ____, COMPILED ON _____ (FIELD TO ENTER)
CSXT USER PROGRAM (IF LOADED)	VERSION 1.01, COMPILED ON 12-01-03 (MM-DD-YY)	VERSION _____, COMPILED ON _____ (FIELD TO ENTER)
SYSTEM SETTINGS		
DATE & TIME (ENABLE DAYLIGHT SAVINGS TIME = Y (YES)	MM-DD-YY 23:01:59	n/a
MILE POST	XYZ-789.01	BD-264.45
SITE NAME	MAIN ST (SR-17,US-1)	FAP 758 (IL-32)
DOT NUMBER	123456A	154618N

NOTE TO INSPECTOR, AT IN SERVICE OF EVENT ANALYZER OR UPDATE OF ITS INTERNAL EXECUTIVE PROGRAM OR ITS CSXT USER PROGRAM, THE VERSION NUMBER AND COMPILE DATES OF EACH PROGRAM MUST BE INSERTED IN THE BLANK FIELDS.

EVENT ANALYZER ETHERNET PORT SETUP	
	IP ADDRESS
ETHERNET DIAGNOSTIC PORT (TOP)	192.168.13.2
ETHERNET REMOTE PORT (BOTTOM)	192.168.13.1

BATTERY INPUTS	DC 01	DC 02	DC 03	DC 04
CHANNEL	1	2	3	4
BATTERY CHANNEL NAMES	X-B BULB BATTERY	OB ELECTRONIC BATTERY	B-G GATE BATTERY	SPARE
BATTERY CHANNEL I.D.	X-B	OB	B-G	SP
SAMPLE PERIOD	500 ms	500 ms	500 ms	10,000 ms
RESOLUTION	00.2 V	00.2 V	01.0 V	02.0 V

MODULE-DIGITAL 4 QUAD CURRENT SENSOR SERIAL NUMBER- [_____] (BLANK UNTIL AIS RECEIVED)				
RESOLUTION (AMPS RMS) : [00.2] ARMS				
AUTOMATICALLY ALLOCATED DIGITAL INPUT	DI 17	DI 18	D1 19	D1 20
DIGITAL 4 QUAD CURRENT SENSOR	1	2	3	4
NAME	E1C	E2A	E1A	E2C
ID	E1C	E2A	E1A	E2C
LIT BULB COUNT ON EACH CIRCUIT	6	6	4	4
CURRENT READING IN AMPS AT APPROXIMATE 10.0 VOLTS BULB VOLTAGE	4.6	4.6	2.6	2.6

DIGITAL INPUTS	DI 01	DI 02	DI 03	DI 04	DI 05
CHANNEL	1	2	3	4	5
NAME		ISLAND TRACK 1		MAINTENANCE PB	
ID	SP	ISL	SP	MPB	SP
ON NAME		ISL 1 UP		MAINTENANCE PB HI	
OFF NAME		ISL 1 DN		MAINTENANCE PB LOW	
ON DEBOUNCE TIME	1000 ms	100 ms	1000 ms	100 ms	1000 ms
OFF DEBOUNCE TIME	1000 ms	100 ms	1000 ms	100 ms	1000 ms
TOGGLE PERIOD	500 ms	500 ms	500 ms	500 ms	500 ms

CHANNEL	1	2	3	4
NAME	RELAY OUTPUT 01	RELAY OUTPUT 02	RELAY OUTPUT 03	RELAY OUTPUT 04
I.D.	RLY01	RLY02	RLY03	RLY04
ON NAME	ON	ON	ON	ON
OFF NAME	OFF	OFF	OFF	OFF
PULSE DURATION	1000 ms	1000 ms	1000 ms	1000 ms

DIGITAL INPUTS	DI 06	DI 07	DI 08	DI 09	DI 10
CHANNEL	6	7	8	9	10
NAME		STANDBY 1			A BELL
ID	SP	STBY1	SP	SP	A BELL
ON NAME		STANDBY UNIT			BELL RINGING
OFF NAME		PRIMARY UNIT			BELL NOT RINGING
ON DEBOUNCE TIME	1000 ms	100 ms	1000 ms	1000 ms	100 ms
OFF DEBOUNCE TIME	1000 ms	100 ms	1000 ms	1000 ms	100 ms
TOGGLE PERIOD	500 ms	500 ms	500 ms	500 ms	500 ms

PORT	USER	AUX 1	MODEM/AUX 2
BAUD RATE	38400	9600	9600
PARITY	N	N	N
DATA BITS	8	8	8
STOP BITS	1	1	1
FLOW CONTROL	NONE	NONE	NONE

DIGITAL INPUTS	DI 11	DI 12	DI 13	DI 14	DI 15	DI 16
CHANNEL	11	12	13	14	15	16
NAME	B BELL	DTMF/TEST	GATE VERTICAL	GATE HORIZONTAL	XR	AC POWER OFF
ID	B BELL	DTMF	GPR	GDP	XR	POR
ON NAME	BELL RINGING	DEACTIVATED	GATE VERTICAL	GATE HORIZONTAL	XR UP	AC POWER ON
OFF NAME	BELL NOT RINGING	ACTIVATED	GATE NOT VERTICAL	GATE NOT HORIZONTAL	XR DN	AC POWER OFF
ON DEBOUNCE TIME	100 ms	100 ms	100 ms	100 ms	100 ms	100 ms
OFF DEBOUNCE TIME	100 ms	100 ms	100 ms	100 ms	100 ms	100 ms
TOGGLE PERIOD	500 ms	500 ms	500 ms	500 ms	500 ms	500 ms

= NOTE

NEW WORK
CXD1230844 IL2012021
06-08-12 XRL/K.SINGH/PRR
xorail

PMD3RCPML.C06
REV. 01-08-10

CSX TRANSPORTATION
RAIL TRANSPORT GROUP ENGINEERING
COMMUNICATIONS AND SIGNALS

FAP ROUTE 758 (IL-32) 154618N

RECORDER PROGRAM
LAPLACE, IL M.P. BD-264.45

DESIGNED	DIGITIZED	CHECKED	DATE
XRL/KPS	XRL/KPS	XRL	06-08-12

DESIGN DATE	REV. NO.	DRAWING	SHEET NO	FILE	SHEET
06-08-12	1	-----	-----	BD26445	C06