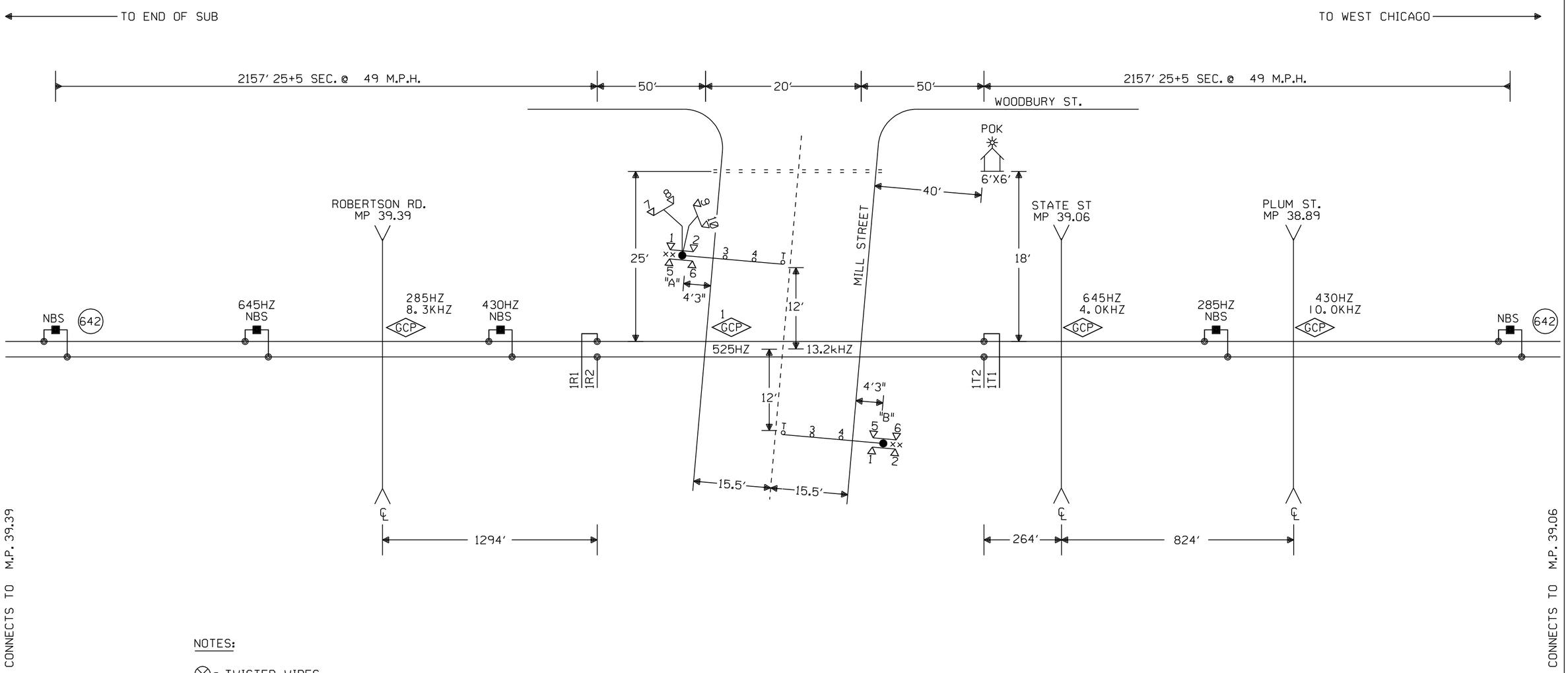

NOTES:

⊗ = TWISTED WIRES
INSULATED 1 TWIST PER FT.
ALL TRACK WIRES 2C. #6

TRANSMITTER AND RECEIVER LEADS
TO BE SEPARATED BY AT LEAST 12" IN TRENCH,
LENGTHS SHOULD NOT EXCEED MANUFACTURES
RECOMMENDATION.

TOP OF FOUNDATION TO BE AT SAME ELEVATION
AS THE SURFACE OF THE TRAVELED WAY & NO
MORE THAN 4" ABOVE THE SURFACE OF THE GROUND.

ALL BUNGALOW WIRING TO BE #16 AWG FLEX
UNLESS OTHERWISE SPECIFIED EXCEPT ALL GROUND
WIRE TO BE #6 AWG FLEX OR LARGER.

ALL WIRING IN GATE MECHANISM TO BE #10 "AWG FLEX".

REFER TO UP STANDARD DWG FOR BUNGALOW GROUNDING.

PORTABLE GENERATOR EXTENSION CORD
FOR 240V TO 240V IS PROVIDED AS WELL
AS A 120V TO 240V ADAPTER.

ALL LIGHTS TO BE 12" ROUNDELS.

= = = = = = 4" X 40' CONDUIT

LIGHTS: LED LIGHTS

GATE A: 19'
GATE B: 19'

xx = BELL

CONSTRUCTION NOTES:

1. FIELD IS TO CONTACT ICC SENIOR RSS BRIAN VERCRUYSSE PRIOR TO BUNGALOW AND WARNING DEVICE INSTALLATION., TO ASSIST IN LAYING OUT THE NEW ROADWAY DESIGN. 312-636-7760

W(S) ← → E(N)

NEW SHEET

Designed: 05/18/11
INSTALL FLASHERS AND GATES WITH CWT AT M.P. 39.12 MILL STREET
Rec#: 15:
WO#: 10468 /TJD /IRG /JTB

MODIFICATION LEVEL	
O.A. LAST LEVEL CHECKED	DU
LAST LEVEL MOD THIS TYPICAL	DU
LAST LEVEL BY DESIGNER	DU
CHANGED FROM TYPICAL?	Y

REV 01.24.11 4K ITKBG.1

UNION PACIFIC
QUALITY PRODUCTIVITY SAFETY
SIGNAL DESIGN

Date: 05/18/11
Des: IRG
Chk: TJD
AFE: 10468

UNION PACIFIC RAILROAD
SOUTH ELGIN, ILLINOIS
MILL STREET
BELVIDERE SUBDIVISION
Office of Sr AVP Engineering - Signal/TCO Omaha, Nebraska

Sh.: 1
DOT 174544D
MP: 39.12
ID: BEV3912.1X

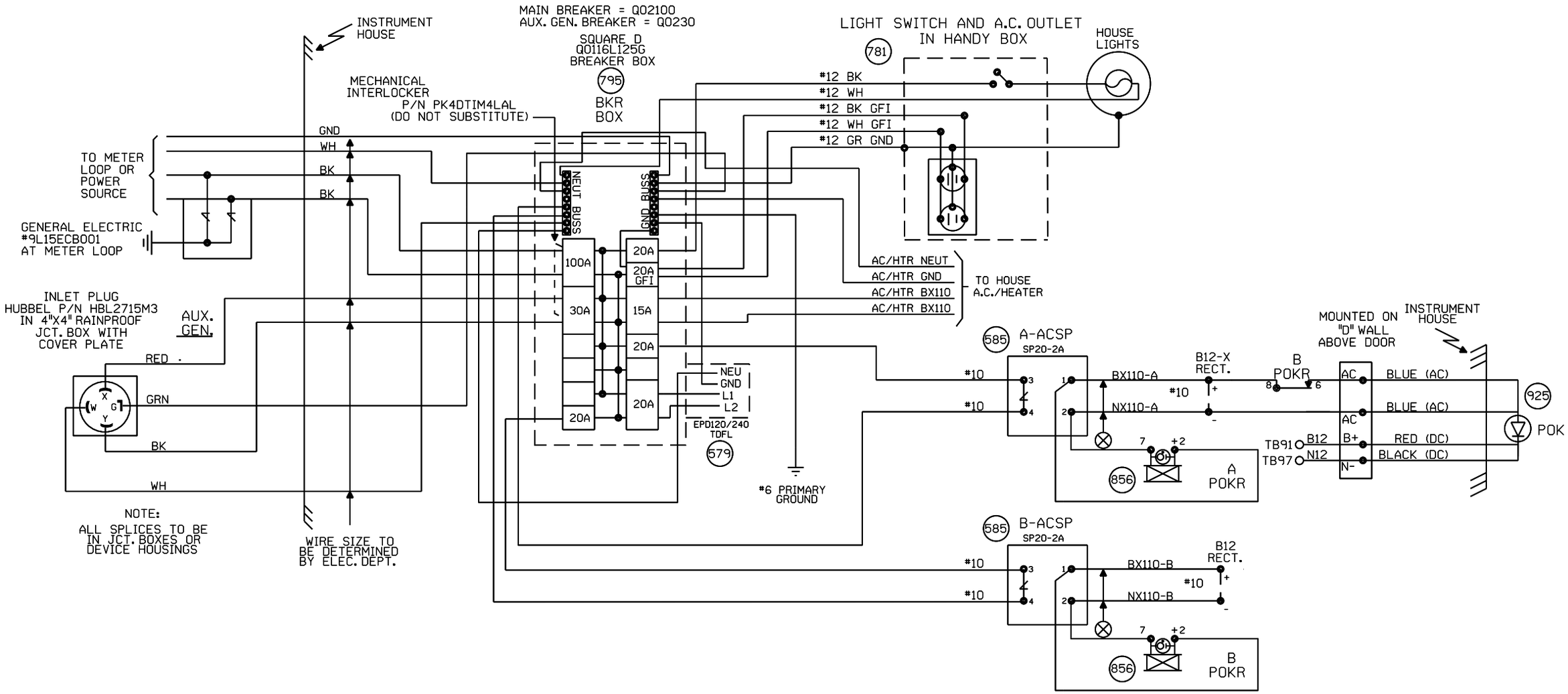

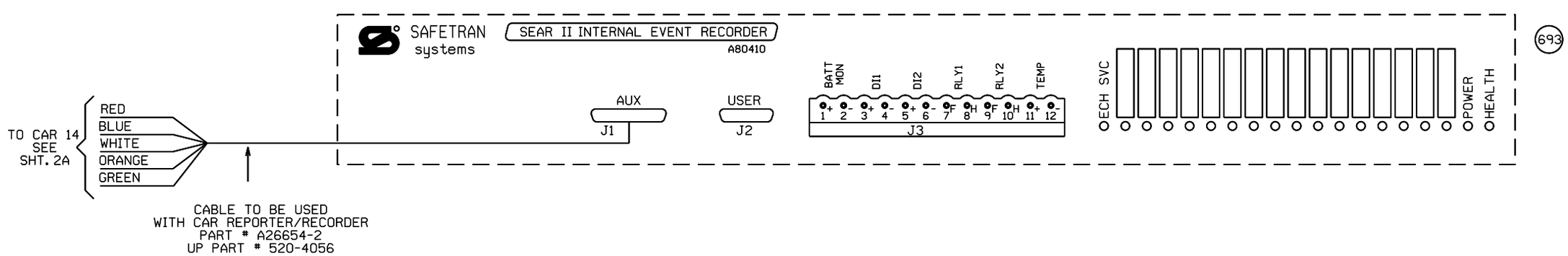

CABLE TO BE USED
WITH CAR REPORTER/RECORDER
PART # A26654-2
UP PART # 520-4056

NOTE:
ALL SPLICES TO BE IN JCT. BOXES OR DEVICE HOUSINGS

WIRE SIZE TO BE DETERMINED BY ELEC. DEPT.

NEW SHEET

Designed: 05/18/11

INSTALL FLASHERS AND GATES WITH CWT AT M.P. 39.12 MILL STREET

Rec*: IS: WO*: 10468 /TJD /IRG /JTB

MODIFICATION LEVEL	
Q.A. LAST LEVEL CHECKED	DU
LAST LEVEL MOD THIS TYPICAL	DU
LAST LEVEL BY DESIGNER	DU
CHANGED FROM TYPICAL?	Y

REV 01.24.11 4K SEARAC.2

UNION PACIFIC
QUALITY PRODUCTIVITY SAFETY
SIGNAL DESIGN

Date: 05/18/11
Des: IRG
Chk: TJD
AFE: 10468

UNION PACIFIC RAILROAD
SOUTH ELGIN, ILLINOIS
MILL STREET
BELVIDERE SUBDIVISION
Office of Sr AVP Engineering - Signal/TCO Omaha, Nebraska

Sh.: 2
DOT 174544D
MP: 39.12
ID: BEV3912.2X

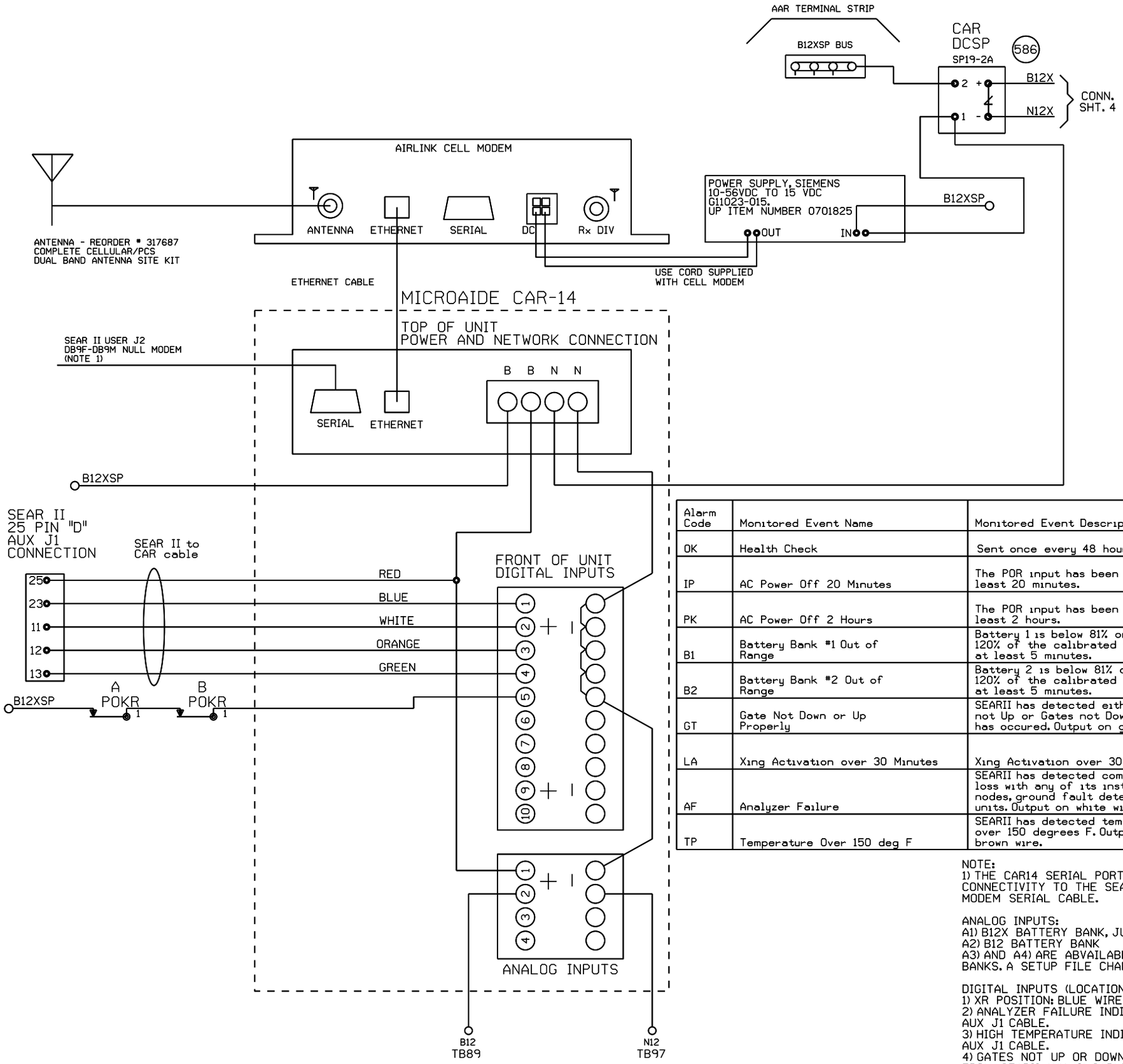

Alarm Code	Monitored Event Name	Monitored Event Description	Alarm Cleared
OK	Health Check	Sent once every 48 hours.	
IP	AC Power Off 20 Minutes	The POR input has been down for at least 20 minutes.	The POR input comes back on for at least 5 minutes after an AC Power Off Alarm
PK	AC Power Off 2 Hours	The POR input has been down for at least 2 hours.	The POR input comes back on for at least 5 minutes after an AC Power Off Alarm
B1	Battery Bank #1 Out of Range	Battery 1 is below 81% or above 120% of the calibrated value for at least 5 minutes.	Battery 1 is within acceptable range for at least 5 minutes.
B2	Battery Bank #2 Out of Range	Battery 2 is below 81% or above 120% of the calibrated value for at least 5 minutes.	Battery 2 is within acceptable range for at least 5 minutes.
GT	Gate Not Down or Up Properly	SEARII has detected either a Gates not Up or Gates not Down alarm has occured. Output on green wire.	The Gate Up or Gates Down indications indicated true after a Gate Not Down or Gate Not Up alarm was triggered.
LA	Xing Activation over 30 Minutes	Xing Activation over 30 Minutes	Crossing has recovered after a Long Activation Alarm had occured.
AF	Analyzer Failure	SEARII has detected communication loss with any of its installed echelon nodes, ground fault detectors, or TSS units. Output on white wire.	Analyzer has recovered after an analyzer failure.
TP	Temperature Over 150 deg F	SEARII has detected temperature over 150 degrees F. Output on brown wire.	Temperature sensor inside SEAR detects temperature is OK after a Hi-Temp alarm.

NOTE:
1) THE CAR14 SERIAL PORT IS VAILABLE TO ADD REMOTE CONNECTIVITY TO THE SEARII. USE A DB9F TO DB9M NULL MODEM SERIAL CABLE.

ANALOG INPUTS:
A1) B12X BATTERY BANK, JUMPERED FOR CAR14 POWER INPUTS
A2) B12 BATTERY BANK
A3) AND A4) ARE ABVAILABLE TO MONITOR ADDITIONAL BATTERY BANKS. A SETUP FILE CHANGE IS REQUIRED.

DIGITAL INPUTS (LOCATIONS WITH SEARII)
1) XR POSITION: BLUE WIRE FROM SEARII AUX J1 CABLE
2) ANALYZER FAILURE INDICATION: WHITE WIRE FROM SEARII AUX J1 CABLE.
3) HIGH TEMPERATURE INDICATION: ORANGE WIRE FROM SEARII AUX J1 CABLE.
4) GATES NOT UP OR DOWN PROPERLY INDICATION: GREEN WIRE FROM SEARII AUX J1 CABLE.
5) POWER OFF INDICATION: POR

NEW SHEET

Designed: 05/18/11

INSTALL FLASHERS AND GATES WITH CWT AT M.P. 39.12 MILL STREET

Rec#: WO#: 10468
IS: /TJD
/ /IRG /JTB

MODIFICATION LEVEL	
Q.A. LAST LEVEL CHECKED	DU
LAST LEVEL MOD THIS TYPICAL	DU
LAST LEVEL BY DESIGNER	DU
CHANGED FROM TYPICAL?	Y

REV 01.24.11 4K ACDCCAR14SII.3

UNION PACIFIC
QUALITY PRODUCTIVITY SAFETY
SIGNAL DESIGN

Date: 05/18/11
Des: IRG
Chk: TJD
AFE: 10468

UNION PACIFIC RAILROAD
SOUTH ELGIN, ILLINOIS
MILL STREET
BELVIDERE SUBDIVISION
Office of Sr AVP Engineering - Signal/TCO Omaha, Nebraska

Sh.: 2A
DOT 174544D
MP: 39.12
ID: BEV3912.2AX

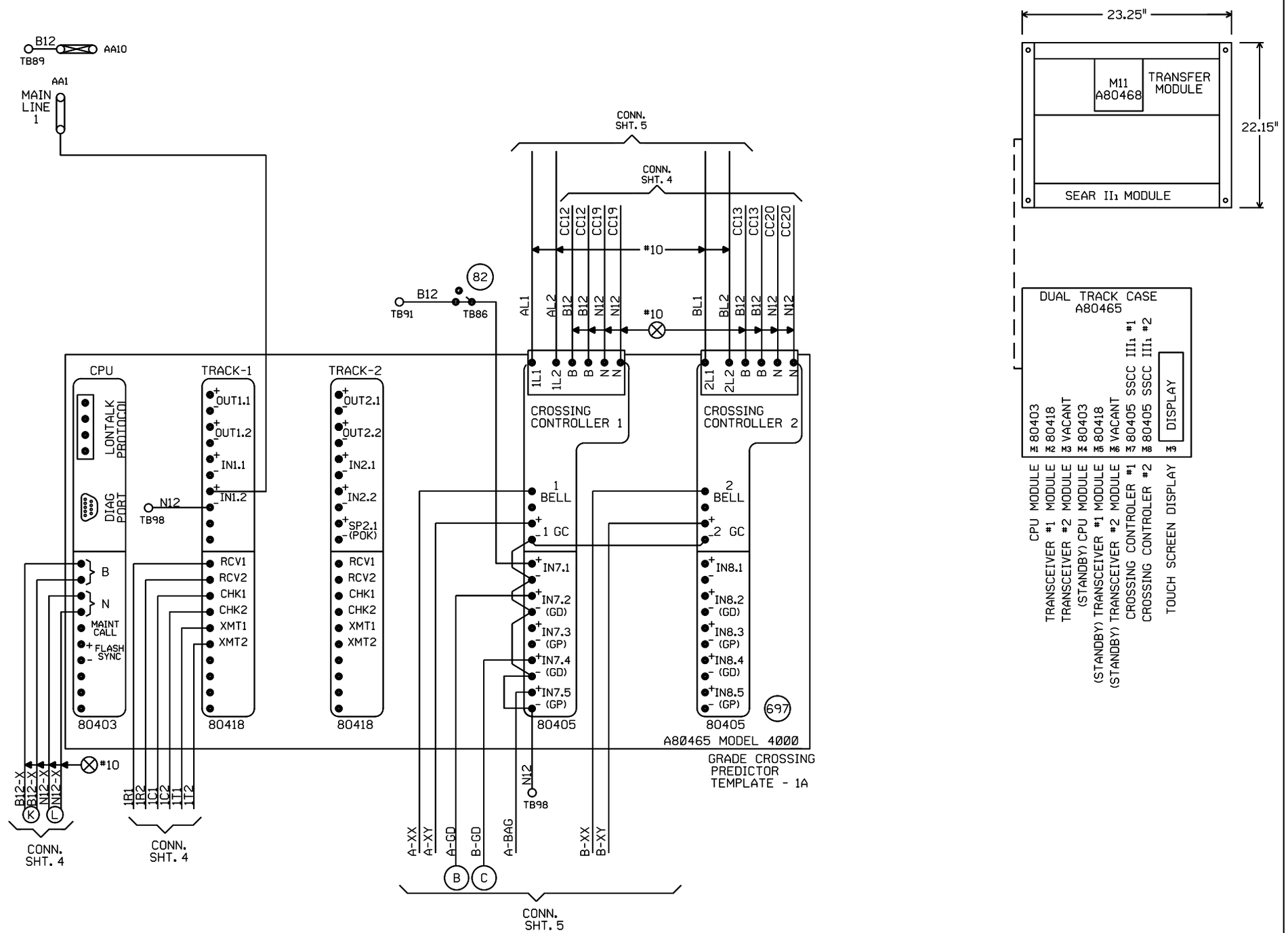

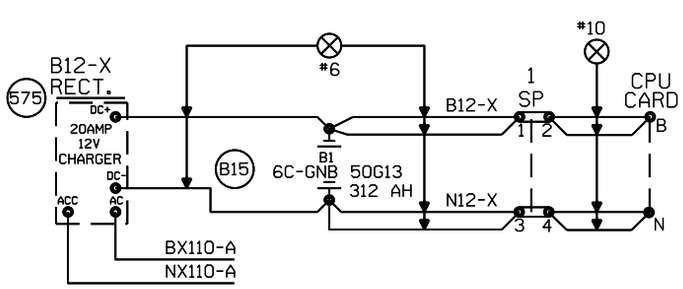

"Mf" FREQUENCY (HZ)	MAXIMUM TRANSMIT WIRE LENGTH (FEET)
86	100
114	125
156	150
211	200
285-970	250

NOTE:
EACH TRANSMITTER TO RAIL WIRE FROM XMT1 AND XMT2 MUST NOT EXCEED THE MAXIMUM LENGTH SPECIFIED IN THE TABLE SHOWN. THE RECEIVER WIRE LENGTH IS NOT CRITICAL. DOES NOT APPLY TO 6 TRACK WIRE APPLICATION.

NEW SHEET

Designed: 05/18/11
INSTALL FLASHERS AND GATES WITH CWT AT M.P. 39.12 MILL STREET
Rec#: WO#: 10468
IS: /TJD /IRG/JTB

MODIFICATION LEVEL	
Q. A. LAST LEVEL CHECKED	DU
LAST LEVEL MOD THIS TYPICAL	DU
LAST LEVEL BY DESIGNER	DU
CHANGED FROM TYPICAL?	Y

REV 01.24.11 4K 2TKGF.3

UNION PACIFIC
QUALITY PRODUCTIVITY SAFETY
SIGNAL DESIGN

Date: 05/18/11
Des: IRG
Chk: TJD
AFE: 10468

UNION PACIFIC RAILROAD
SOUTH ELGIN, ILLINOIS
MILL STREET
BELVIDERE SUBDIVISION
Office of Sr AVP Engineering - Signal/TCO Omaha, Nebraska

Sh.: 3
DOT 174544D
MP: 39.12
ID: BEV3912.3X

Minimum Program Steps Report

Location and SIN

DOT Number: 174544D
Milepost Number: 39.12
Site Name: SOUTH ELGIN, IL

SIN: 762010010016 *

* Parameter is part of office check number calculation.

MCF and Template Selection

MCF Name: GCP-T6X-02-4.mcf
MCF Revision: 24
MCFCRC: 09FC363B

Template = 1A:6 Trk Bi (OCCN) *

* Parameter is part of office check number calculation.

Minimum Program Steps

TEMPLATE: track 1-Bi, Island
Track 1 : GCP Frequency = 525 Hz (Field,TCN)
Track 1 : Approach Distance = 2157 ft (Set in Field,TCN)
Track 1 : Prime Warning Time = 25 sec (OCCN) *
Track 1 : GCP Transmit Level = Medium (Set in Field,TCN)
Track 1 : Isl Frequency = 13.2 kHz (Set in Field)

TEMPLATE: AND 1 XR
AND 1 Enable Used = Yes (OCCN) *

TEMPLATE: SSCC
SSCC 1 : Lamp Neutral Test = Off (Set in Field)
SSCC 2 : Lamp Neutral Test = Off (Set in Field)

TEMPLATE: OOS
OOS Control = OOS IPs (OCCN) *
OOS Timeout = 1 hrs (Set in Field) (Hidden)

TEMPLATE: IP assignment 1
IN 1.2 = Out Of Service IP 1 (OCCN) *

TEMPLATE: IP assignment SSCC
IN 7.1 = AND 1 XR Enable (OCCN) *

GCP: track 1
Track 1 : Island Distance = 120 ft (Set in Field,TCN)

ADVANCED: site options
Daylight Savings = On (Set in Field)

* Parameter is part of office check number calculation.

Check Numbers

Office Check Number: 1C7A8937
Config. Check Number: 5BA32E82
(Based on MCF Revision 24)

Parameters not part of office check number calculation:

Track 1 : GCP Frequency = 525 Hz
Track 1 : Approach Distance = 2157 ft (Set in Field)
Track 1 : GCP Transmit Level = Medium (Set in Field)
Track 1 : Isl Frequency = 13.2 kHz
SSCC 1 : Lamp Neutral Test = Off (Set in Field)
SSCC 2 : Lamp Neutral Test = Off (Set in Field)
OOS Timeout = 1 hrs (Set in Field)
Track 1 : Island Distance = 120 ft (Set in Field)
Daylight Savings = On (Set in Field)

Comments

<none>

Configuration Package File

Filename: BEV3912_174544D.pac
Path: C:\Documents and Settings\mlightner\My Documents\temp\
Date/Time: 8/22/2011 15:11:53
DT Version: 5.2.1

NEW SHEET

				Designed: 05/18/11 INSTALL FLASHERS AND GATES WITH CWT AT M.P. 39.12 MILL STREET Rec#: WO#: 10468 IS: / /TJD /IRG/JTB	**NOTE: Actual OFFSET and ISLAND distances must be verified by field personnel.**	UNION PACIFIC QUALITY PRODUCTIVITY SAFETY SIGNAL DESIGN	Date: 05/18/11 Des: IRG Chk: TJD AFE: 10468	**UNION PACIFIC RAILROAD** SOUTH ELGIN, ILLINOIS MILL STREET BELVIDERE SUBDIVISION Office of Sr AVP Engineering - Signal/TCO Omaha, Nebraska	Sh.: 3A DOT 174544D MP: 39.12 ID: BEV3912.3AX

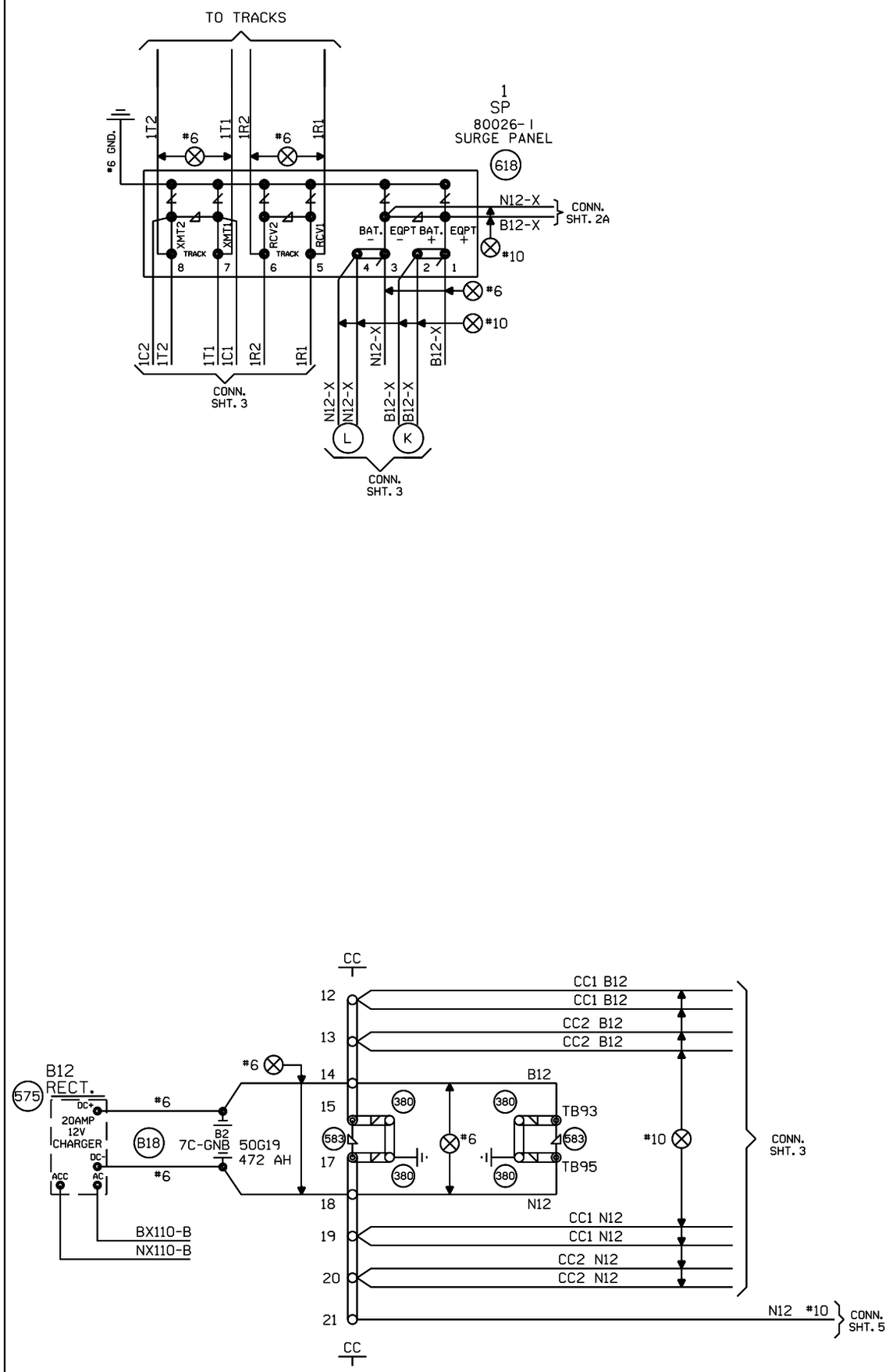

NEW SHEET

					Designed: 05/18/11 INSTALL FLASHERS AND GATES WITH CWT AT M.P. 39.12 MILL STREET Rec#: WO#: 10468 IS: / /TJD /IRG /JTB	MODIFICATION LEVEL Q.A. LAST LEVEL CHECKED DU LAST LEVEL MOD THIS TYPICAL DU LAST LEVEL BY DESIGNER DU CHANGED FROM TYPICAL? Y REV 01.24.11 4K 4TKSPGFC.4	UNION PACIFIC QUALITY PRODUCTIVITY SAFETY SIGNAL DESIGN	Date: 05/18/11 Des: IRG Chk: TJD AFE: 10468	UNION PACIFIC RAILROAD SOUTH ELGIN, ILLINOIS MILL STREET BELVIDERE SUBDIVISION Office of Sr AVP Engineering - Signal/TCO Omaha, Nebraska	Sh.: 4 DOT 174544D MP: 39.12 ID: BEV3912.4X

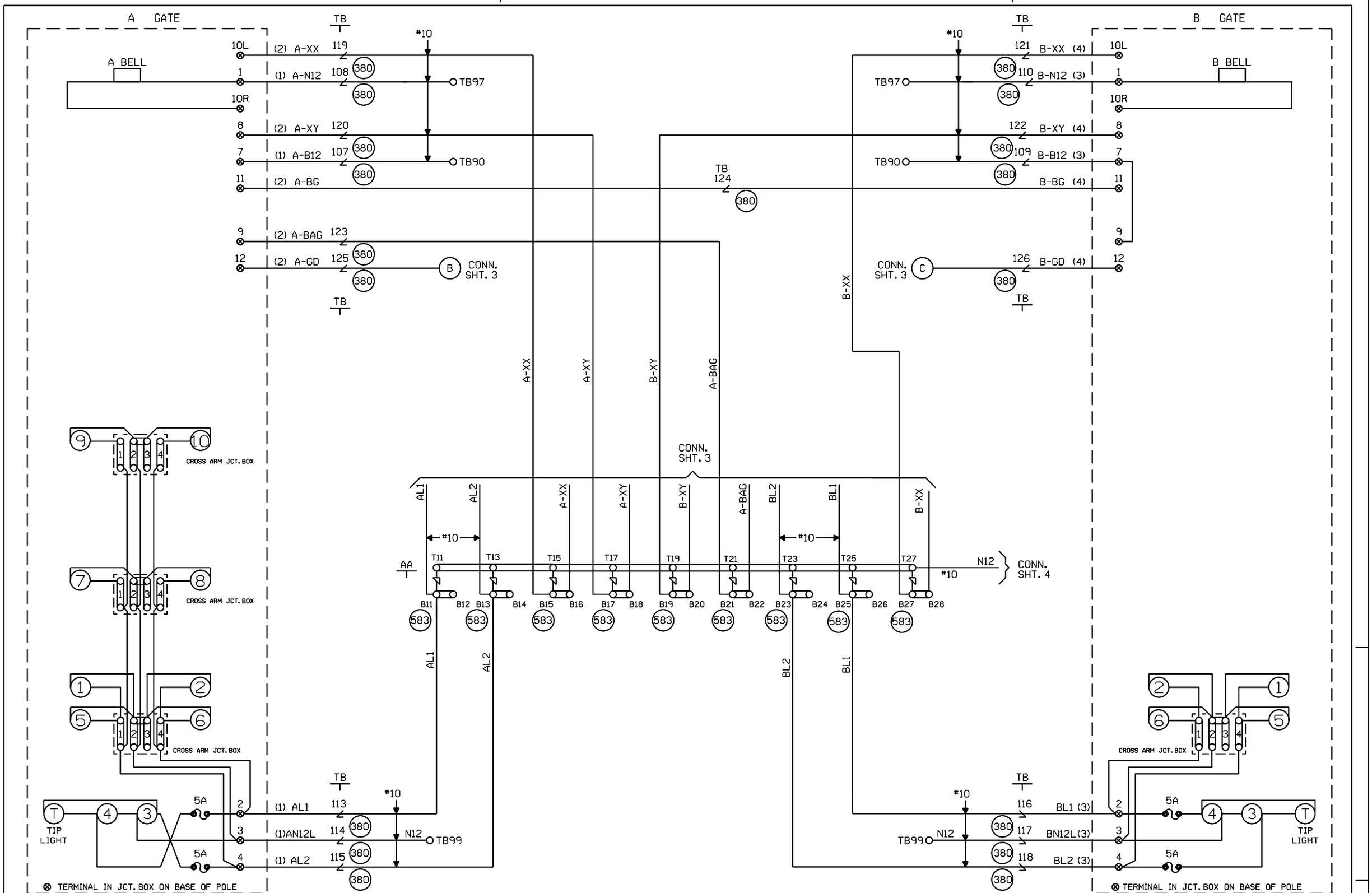

CABLE TABULATION

CABLE NO. 1 5C. NO.6 U.G.B.T. TO GATE A
CABLE NO. 2 7C. NO.14 U.G.B.T. TO GATE A
CABLE NO. 3 5C. NO.6 U.G.B.T. TO GATE B
CABLE NO. 4 7C. NO.14 U.G.B.T. TO GATE B

NEW SHEET

Designed: 05/18/11

INSTALL FLASHERS AND GATES WITH CWT AT M.P. 39.12 MILL STREET

Rec#: WO#: 10468
IS: /TJD
/ /IRG/JTB

MODIFICATION LEVEL	
Q.A. LAST LEVEL CHECKED	DU
LAST LEVEL MOD THIS TYPICAL	DU
LAST LEVEL BY DESIGNER	DU
CHANGED FROM TYPICAL?	Y

REV 01.24.11 4K GFSLTYP.5

UNION PACIFIC
QUALITY PRODUCTIVITY SAFETY
SIGNAL DESIGN

Date: 05/18/11
Des: IRG
Chk: TJD
AFE: 10468

UNION PACIFIC RAILROAD
SOUTH ELGIN, ILLINOIS
MILL STREET
BELVIDERE SUBDIVISION
Office of Sr AVP Engineering - Signal/TCO Omaha, Nebraska

Sh.: 5
DOT 174544D
MP: 39.12
ID: BEV3912.5X

WCH 3593-E

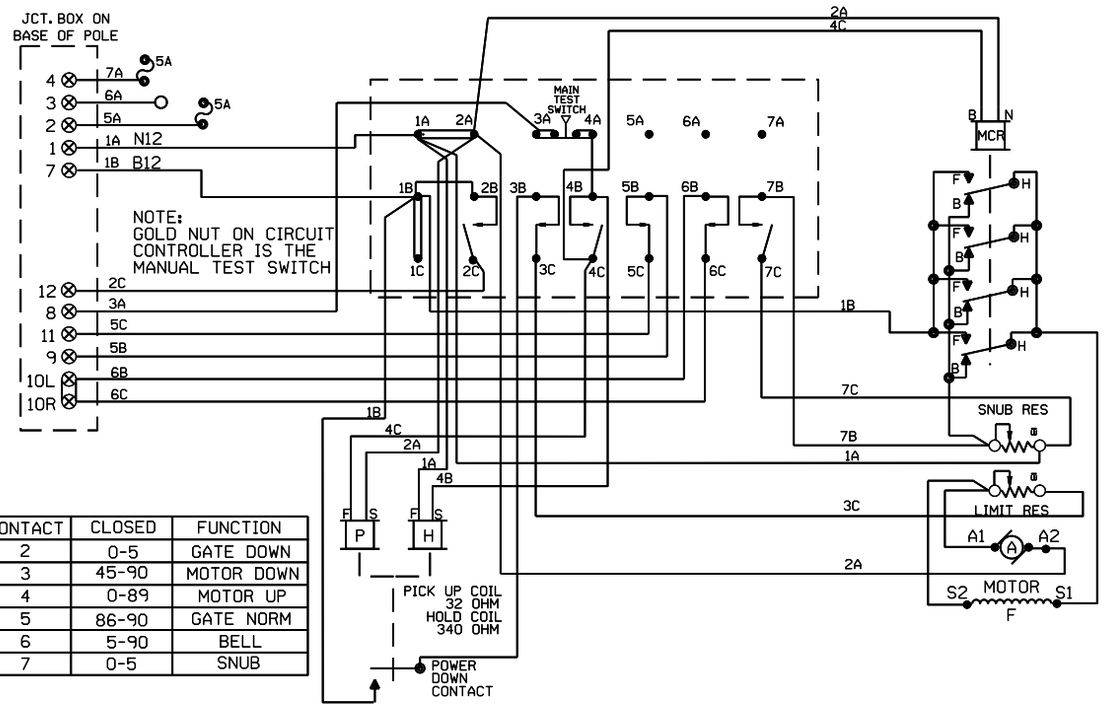

CONTACT	CLOSED	FUNCTION
2	0-5	GATE DOWN
3	45-90	MOTOR DOWN
4	0-89	MOTOR UP
5	86-90	GATE NORM
6	5-90	BELL
7	0-5	SNUB

WCH 3597-E

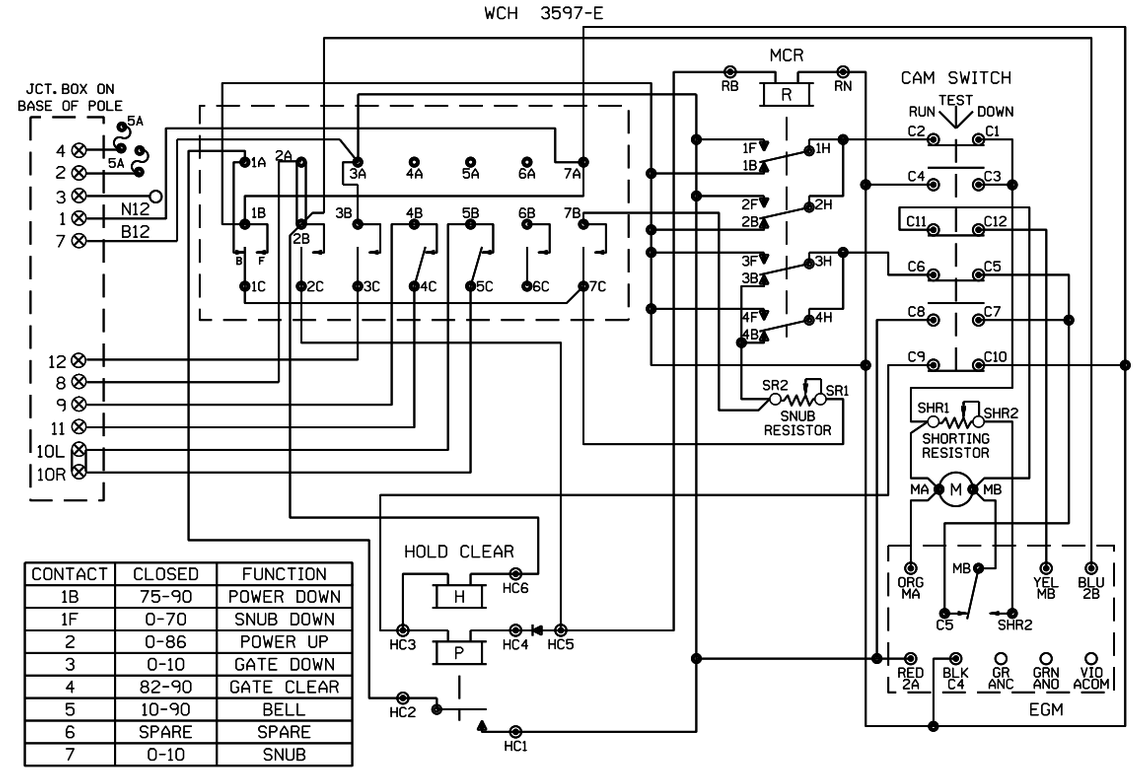

CONTACT	CLOSED	FUNCTION
1B	75-90	POWER DOWN
1F	0-70	SNUB DOWN
2	0-86	POWER UP
3	0-10	GATE DOWN
4	82-90	GATE CLEAR
5	10-90	BELL
6	SPARE	SPARE
7	0-10	SNUB

WCH 3597-RB

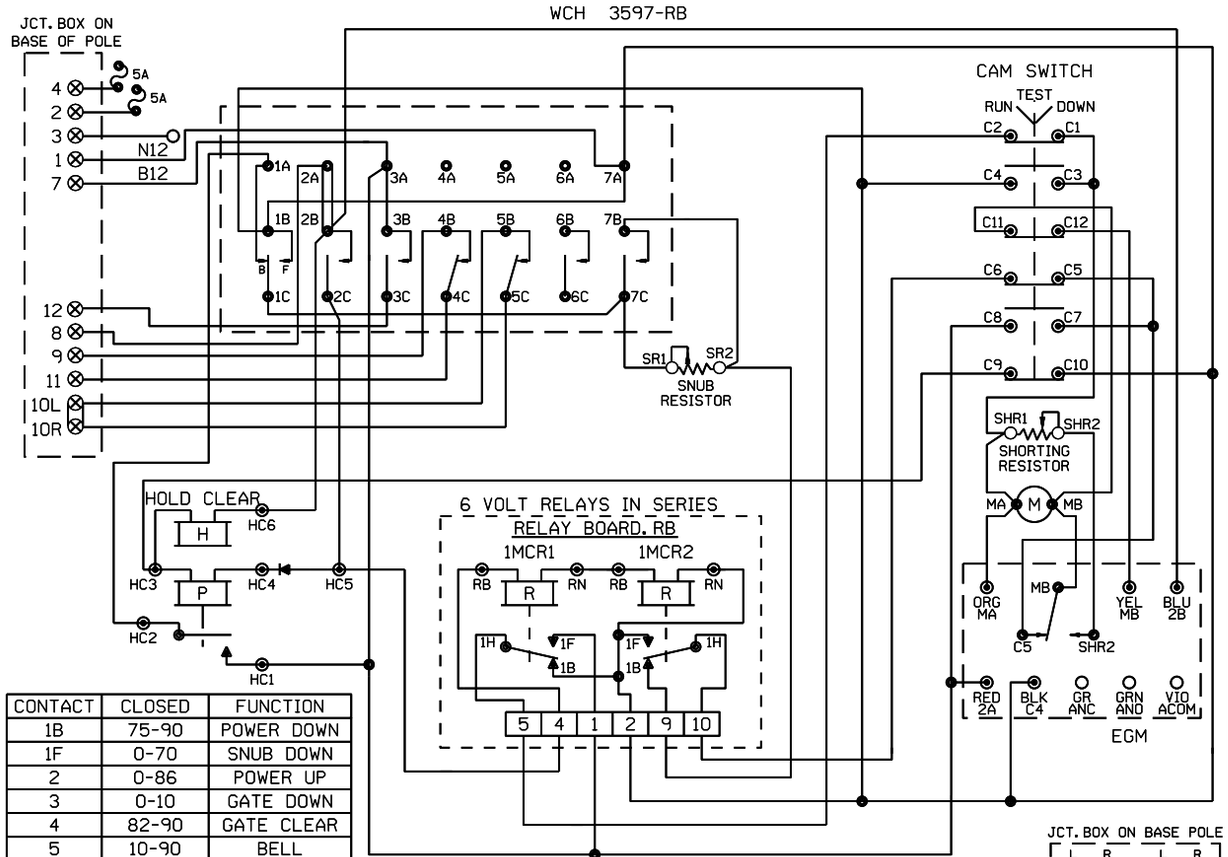

CONTACT	CLOSED	FUNCTION
1B	75-90	POWER DOWN
1F	0-70	SNUB DOWN
2	0-86	POWER UP
3	0-10	GATE DOWN
4	82-90	GATE CLEAR
5	10-90	BELL
6	SPARE	SPARE
7	0-10	SNUB

JCT. BOX ON BASE POLE

L	R	L	R
1		7	
2		8	
3		9	
4		10	
5		11	
6		12	

SHOW TYPE MECH. INSTALLED

ALL MECHANISMS SHOWN IN THE CLEAR POSITION

SAFETRAN S-60

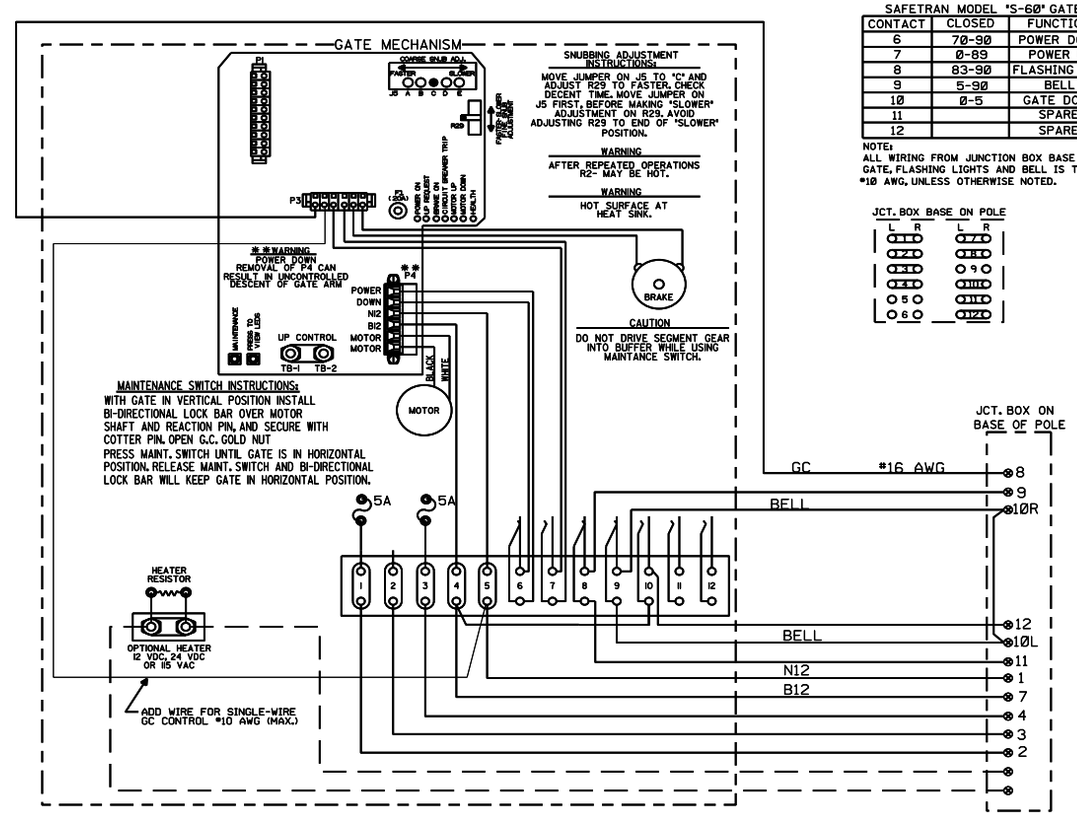

SAFETRAN MODEL "S-60" GATE

CONTACT	CLOSED	FUNCTION
6	70-90	POWER DOWN
7	0-89	POWER UP
8	83-90	FLASHING LGT.
9	5-90	BELL
10	0-5	GATE DOWN
11		SPARE
12		SPARE

NOTE: ALL WIRING FROM JUNCTION BOX BASE TO GATE, FLASHING LIGHTS AND BELL IS TO BE #10 AWG, UNLESS OTHERWISE NOTED.

JCT. BOX BASE ON POLE

L	R	L	R
1		7	
2		8	
3		9	
4		10	
5		11	
6		12	

NEW SHEET

Designed: 05/18/11

INSTALL FLASHERS AND GATES WITH CWT AT M.P. 39.12 MILL STREET

Rec'd IS: WO#: 10468 TJD / IRG/JTB

MODIFICATION LEVEL	
Q.A. LAST LEVEL CHECKED	DU
LAST LEVEL MOD THIS TYPICAL	DU
LAST LEVEL BY DESIGNER	DU
CHANGED FROM TYPICAL?	N

REV 01.24.11 4K GWIRING.7

UNION PACIFIC — QUALITY PRODUCTIVITY SAFETY — SIGNAL DESIGN

Date: 05/18/11
Des: IRG
Chk: TJD
AFE: 10468

UNION PACIFIC RAILROAD

SOUTH ELGIN, ILLINOIS
MILL STREET
BELVIDERE SUBDIVISION

Office of Sr AVP Engineering - Signal/TCO Omaha, Nebraska

Sh.: 6
DOT 174544D
MP: 39.12
ID: BEV3912.6X

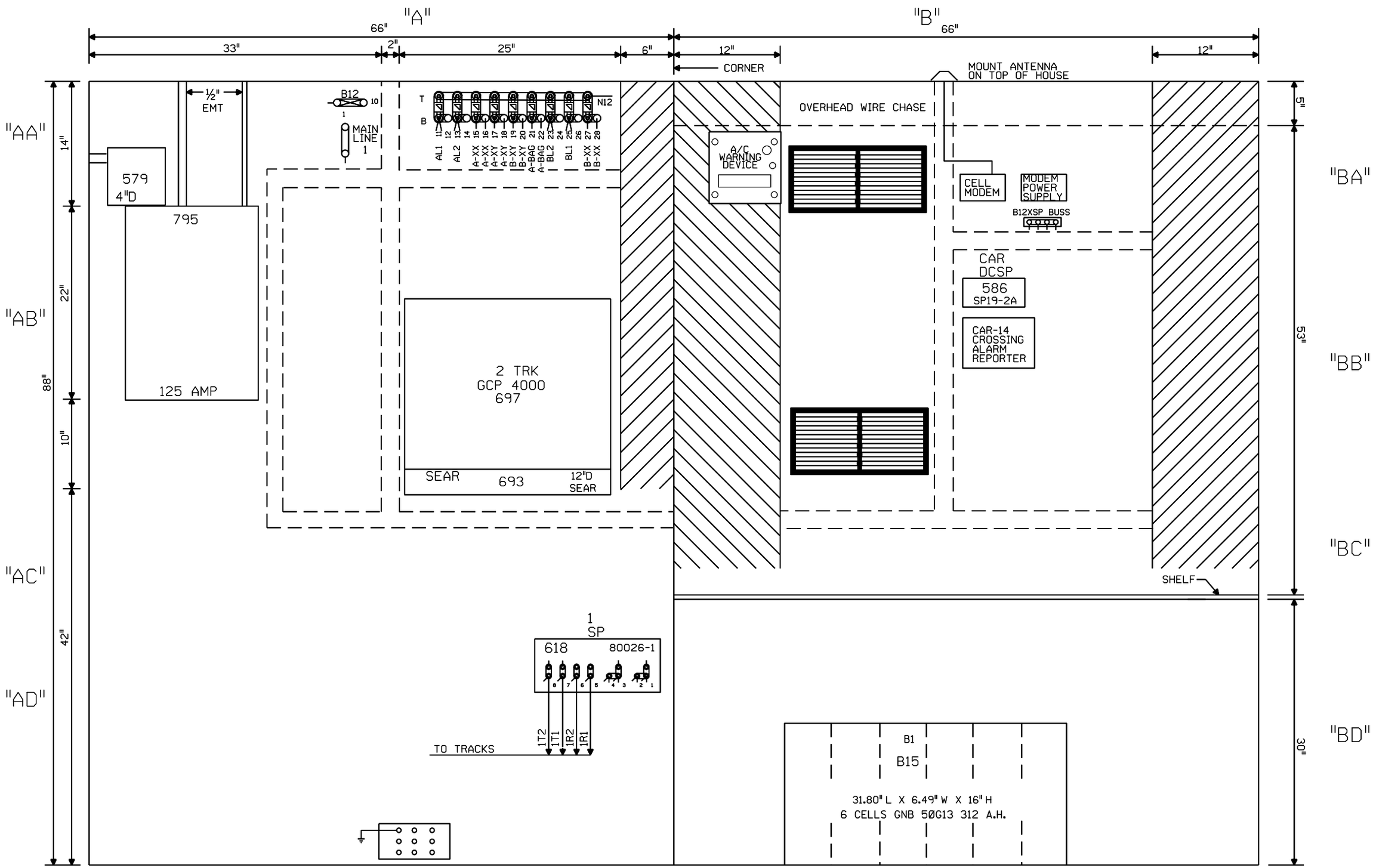

NOTE: ALL DIMENSIONS SHOWN ARE APPROXIMATE.

NEW SHEET

Designed: 05/18/11 INSTALL FLASHERS AND GATES WITH CWT AT M.P. 39.12 MILL STREET Rec#: WO#: 10468 IS: / / TJD / IRG/JTB	MODIFICATION LEVEL		UNION PACIFIC QUALITY PRODUCTIVITY SAFETY SIGNAL DESIGN	Date: 05/18/11 Des: IRG Chk: TJD AFE: 10468	UNION PACIFIC RAILROAD SOUTH ELGIN, ILLINOIS MILL STREET BELVIDERE SUBDIVISION Office of Sr AVP Engineering - Signal/TCO Omaha, Nebraska	Sh.: 7 DOT 174544D MP: 39.12 ID: BEV3912.7X
	Q. A. LAST LEVEL CHECKED	DU				
	LAST LEVEL MOD THIS TYPICAL	DU				
	LAST LEVEL BY DESIGNER	DU				
	CHANGED FROM TYPICAL?	Y				
	REV 01.24.11 4K 4TKGFC.8					

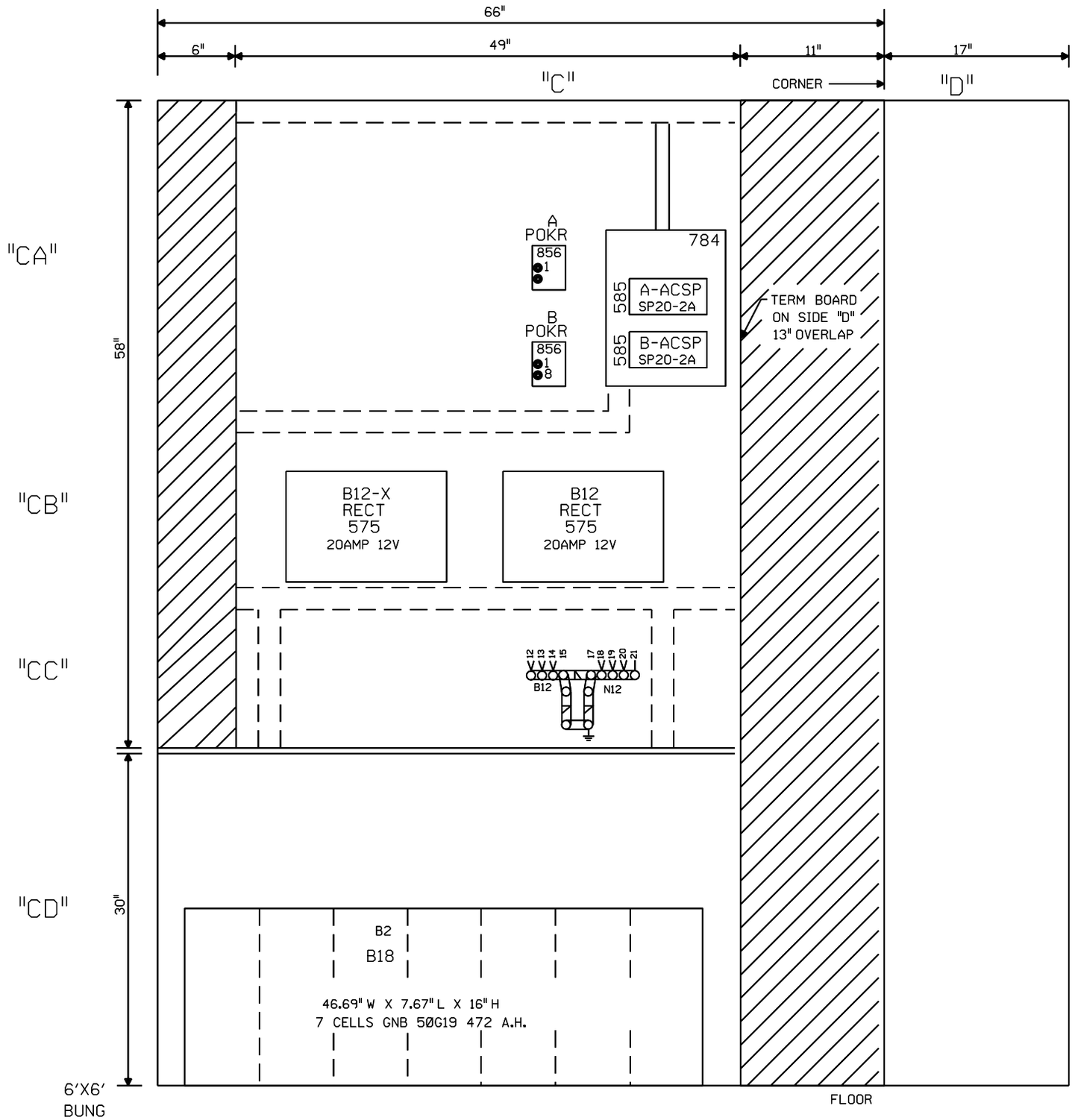

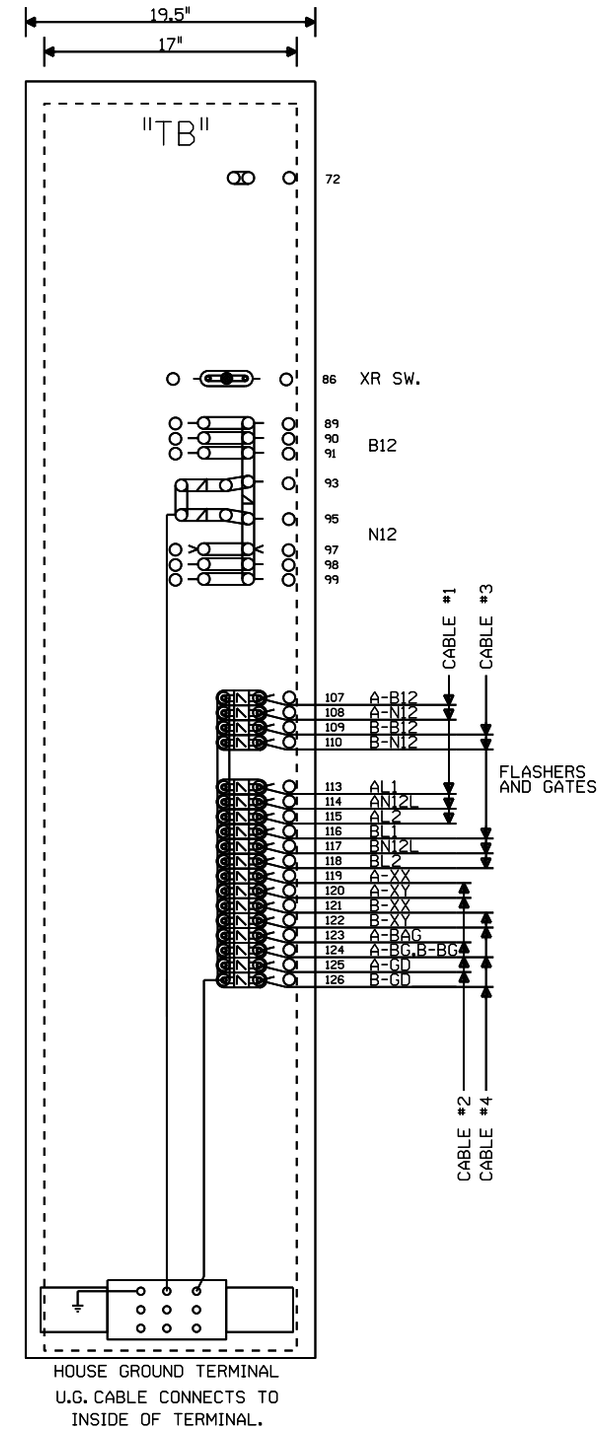

NOTE: ALL DIMENSIONS SHOWN
ARE APPROXIMATE.

NEW SHEET

Designed: 05/18/11 INSTALL FLASHERS AND GATES WITH CWT AT M.P. 39.12 MILL STREET Rec#: WO#: 10468 IS: /TJD / /IRG/JTB	MODIFICATION LEVEL		UNION PACIFIC QUALITY PRODUCTIVITY SAFETY SIGNAL DESIGN	Date: 05/18/11 Des: IRG Chk: TJD AFE: 10468	UNION PACIFIC RAILROAD SOUTH ELGIN, ILLINOIS MILL STREET BELVIDERE SUBDIVISION Office of Sr AVP Engineering - Signal/TCO Omaha, Nebraska	Sh.: 8 DOT 174544D MP: 39.12 ID: BEV3912.8X
	Q.A. LAST LEVEL CHECKED	DU				
	LAST LEVEL MOD THIS TYPICAL	DU				
	LAST LEVEL BY DESIGNER	DU				
	CHANGED FROM TYPICAL?	Y				
	REV 01.24.11 4K GFC.9					

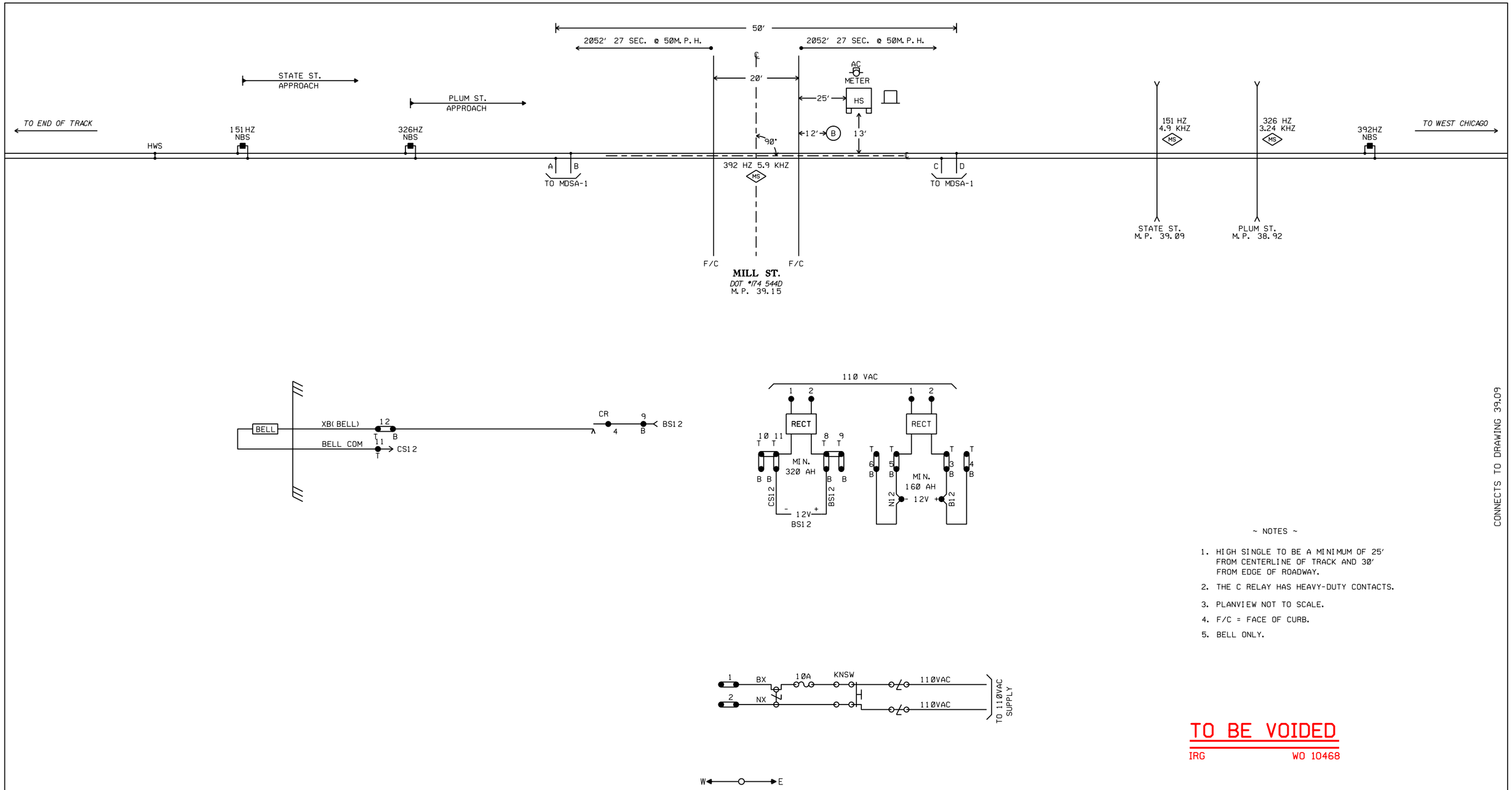

~ NOTES ~

1. HIGH SINGLE TO BE A MINIMUM OF 25' FROM CENTERLINE OF TRACK AND 30' FROM EDGE OF ROADWAY.
2. THE C RELAY HAS HEAVY-DUTY CONTACTS.
3. PLANVIEW NOT TO SCALE.
4. F/C = FACE OF CURB.
5. BELL ONLY.

TO BE VOIDED

IRG WO 10468

REVISIONS

REV.	4/2/96
SPEED UPGRADE W.O. 17985	2/96 JWM/HAR/ABS
REV. ADDED APPROACH INFORMATION	11-10-01 WITT
3 REV. REPLACE PMD-1 WITH MS2000 AT MILL STREET M.P. 39.15 A.F.E. OE REC. #14548 05-23-07	08-22-07 MAW/CTC/ /JJF
Revised: NOTES UPDATED PER FIELD AC AT MILL ST. M.P. 39.15	8-4-09
Rec#: 16067 IS: 5-28-09	WO#: N/A MJD/WIT/ / /

UNION PACIFIC
QUALITY PRODUCTIVITY SAFETY
SIGNAL DESIGN

S. ELGIN, IL
MILL ST.
M.P. 39.15

BELVIDERE SUBDIVISION

BEV03915.00CV

SYSTEM$TIME$$$$$$

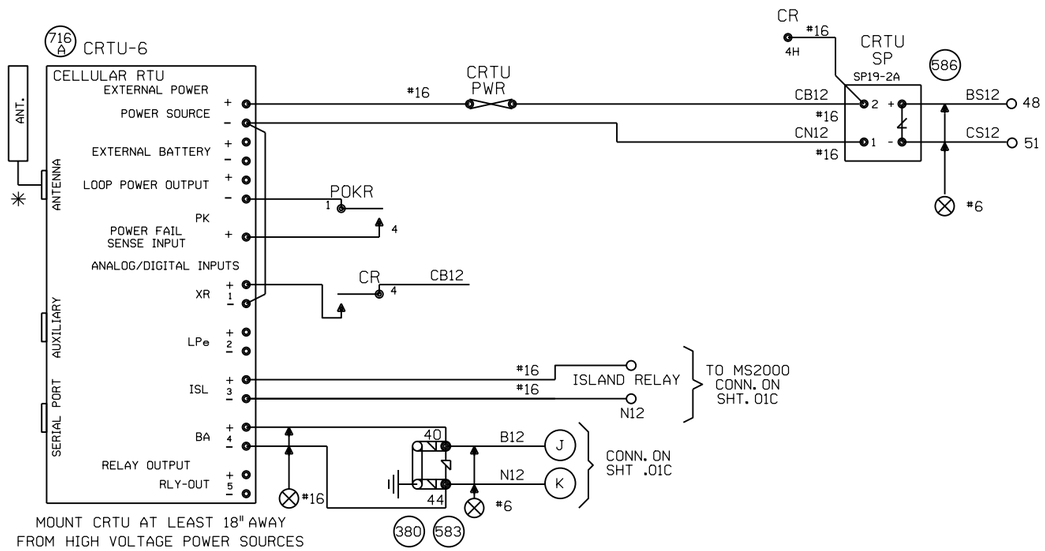

NOTES:

ALL DIODES 1N5060 OR 1N4004 UNLESS OTHERWISE NOTED.
✳ MOUNT ANTENNA ON TOP OF HOUSE.
ALL WIRES #18 UNLESS OTHERWISE NOTED.
ALL UNUSED 'NC' INPUTS MUST BE TIED HIGH TO BATTERY
ALL UNUSED ANALOG INPUTS MUST BE TIED HIGH TO BATTERY
ALL UNUSED 'NO' INPUTS MUST BE DISCONNECTED
NORMAL STATE FOR ANALOG CHANNELS IS EQUAL TO THE STORED NOMINAL VOLTAGE +120% OR -81%
CRTU FRONT PANEL DISPLAY CHART INDICATES NORMAL STATE

DIGITAL INPUT HIGH, OR POWER FAIL INPUT CLOSED — DIGITAL INPUT LOW, OR POWER FAIL INPUT OPEN

L — LATCH IS SET BECAUSE CRTU DETECTED AN ALARM CONDITION
12.06V L

'sRUN MODE' — 'sRUN MODE-SILENT' — CRTU RADIO IS DISABLED. REPROGRAM CRTU WITH LAPTOP.

ANALOG AND AC INPUT MODULES MUST BE MOUNTED LESS THAN 12" FROM CRTU

UNIT INSTALLATION AND SETUP

R.R. SITE ID WHERE; SSSS = 4 CHARACTER SUBDIVISION ID. FILL WITH PRECEDING ZEROS AS REQUIRED. THE MAIN TRACK SUBDIVISION ID* IS IN THE CURRENT TIMETABLE. INDUSTRIAL LEADS, LEASED, AND LEAD TRACKS LISTED WITHIN THE SUBDIVISION MAY HAVE THEIR OWN UNIQUE SUBDIVISION ID*. DO NOT AUTOMATICALLY USE THE MAIN TRACK SUBDIVISION ID* FOR THESE OTHER TRACKS. ALWAYS DOUBLE CHECK WITH THE MOST CURRENT PRINTED COPY OF THE TIMETABLE.
LLLLLLLL = 8 CHARACTERS USE DOT* AT CROSSINGS, AND USE MP* AT WAYSIDE AND HBD SITES. FILL WITH PRECEDING DASHES AS REQUIRED.
THE MP* MUST USE A DECIMAL POINT TO SEPARATE NUMBERS.
AA = 2 CHARACTER STATE NAME FOR CROSSINGS.
AA = 'WD' FOR WAYSIDE LOCATIONS, AA = 'HB' FOR HBD SITES.
MUST BE 14 CHARACTERS LONG, NO SPACES ALLOWED.

SITE IDENTIFIER: SSSSLLLLLLLLAA	0015-174543WIL
SIGNAL STRENGTH dBm	
CARRIER ID	
FIRMWARE VERSION	2.3.06
SERIAL NUMBER	
CONFIGURATION NET	MICROBURST
SIGNAL STATUS	
SCADANET STATUS	
SILENCE INTERVAL	60 MINUTES
HEALTHCHECK INTERVAL	EVERY 2 DAYS
ALARM DEFER DELAY	240 MINUTES (4 HOURS)
OPERATION TO RESUME:	RUN
CALIBRATION CONSTANT	
CH4	
POWER SOURCE	

FIELD PROVIDES: SAMPLED NOMINAL VOLTAGES, SCADANET STATUS CALIBRATION CONSTANTS, SERIAL NUMBER, AND SIGNAL STATUS.

CHANNEL SETUP - STANDARD CONFIGURATION 15:XR,LPe,ISL,BA

CHANNEL NORMAL STATE	SENSE (NO/NC)	NAME FUNCTION	RECOGNITION DELAY SECONDS ACTIVE	RECOGNITION DELAY SECONDS NORMAL	RETURN TO NORMAL	REPORTING MODE	ALARM LINKED CHANNEL	ALARM LINKED CRITERIA	EVENT LOGGING ENABLED OPTIONS
POWER FAIL (CH5)	POWER FAIL DETECT NO	PFin-PK AC POWER FAIL	7,200 ALARM	300 NORMAL	ENABLED	ALERT	DISABLED	N/A	
CH1	DIGITAL INPUT NO	CH1-XR XR DOWN TO LONG	1,800 ALARM	1 NORMAL	ENABLED	ALERT	DISABLED	N/A	
CH2	DIGITAL INPUT NO	CH2-LPe LIGHT OUT GATES NOT UP/DOWN XING CNTRLR FAILED	120 ALARM	10 NORMAL	ENABLED	ALERT	DISABLED	N/A	
CH3	DIGITAL INPUT NC	CH3-ISL ISLAND OCCUPIED DAX, PREEMPT WARNING TIME	1 ACTIVE	1 NORMAL	DISABLED	STATUS ONLY	DISABLED	N/A	DIGITAL EVENTS
CH4 STORED NOMINAL VOLTAGE	ANALOG INPUT N/A	CH4-BA/V BATTERY MONITOR BATTERY LOW	300 ALARM	300 NORMAL	DISABLED	ALERT W/UPDATE	DISABLED	N/A	CH1-XR CH3-ISL
POWER SOURCE (CH6)	ANALOG INPUT N/A	PS-BA/V BATTERY MONITOR BATTERY LOW	300 ALARM	300 NORMAL	DISABLED	ALERT W/UPDATE	DISABLED	N/A	

ANALOG CHANNEL	USEFUL RANGE VOLTS LOW	USEFUL RANGE VOLTS HIGH	DISPLAYED RANGE VOLTS LOW	DISPLAYED RANGE VOLTS HIGH	RELATIVE ALARM POINT LOW	RELATIVE ALARM POINT HIGH	ABSOLUTE ALARM POINT LOW	ABSOLUTE ALARM POINT HIGH	AUTOMATIC UPDATE INTERVAL	STORED NOMINAL VOLTAGE	SAMPLED NOMINAL VOLTAGE
CH4	0.0	30.00	0.0	30.00	81%	120%	10.0	28.0	10 DAYS	12.69	
POWER SOURCE	0.0	30.00	0.0	30.00	81%	120%	10.0	28.0	10 DAYS	12.69	
RELAY OUTPUT	NAME RLY-OUT		ACTIVE SET-UP-OPEN		NORMAL CLR-DN-CLOSE		PULSE DURATION		15 SECONDS	CHARTS REV'D 3-2-01	

MAINTENANCE OPERATIONS

TO START OR ABORT ANY PROCEDURE
1. PRESS THE 'CANCEL' BUTTON FIRST

WHEN RESPONDING TO A CALL, PUT THE CRTU IN THE 'SILENCE ALARMS' MODE
1. PRESS 'SELECT' AND THEN '+ ARROW' BUTTON UNTIL
   DISPLAY: ACTION? SILENCE ALARMS
2. PRESS THE 'SELECT' BUTTON TWICE
3. CORRECT PROBLEM AND SIMULATE NORMAL TRAIN MOVEMENT THROUGH THE LOCATION
4. EXAMINE EACH CHANNEL ON THE CRTU
5. PRESS THE '+/- ARROW' BUTTON VERIFY ALL CHANNELS INDICATE A NORMAL STATE NORMAL STATES ARE ON THE CHANNEL SETUP CHART

CLEAR TIMERS, LATCHES AND SEND ALL NORMAL
1. DO STEPS #1 - #5 ABOVE, AND PRESS 'CANCEL'.
2. PRESS 'SELECT' AND THEN '- ARROW' BUTTON UNTIL
   DISPLAY: ACTION? SERVICE MODE
3. PRESS 'SELECT' AGAIN TO RESET TIMERS, AND IF
   DISPLAY: SERVICE MODE ALL NORMAL
4. PRESS 'SELECT' AGAIN TO CLEAR LATCHES, AND SEND ALL NORMAL. SKIP STEPS #5-#6.
5. HOWEVER, IF ALARMS ARE NOT CLEARED;
   DISPLAY: SERVICE MODE ALARMS PENDING/PRESENT
6. PRESS 'CANCEL', CORRECT PROBLEM AND REPEAT STEPS #2 THRU #5 UNTIL ALL NORMAL SENT.

TO CANCEL THE 'SILENCE ALARMS' MODE
1. PRESS 'SELECT' AND THEN '+ ARROW' BUTTON UNTIL
   DISPLAY: ACTION? CANCEL SILENCE
2. PRESS THE 'SELECT' BUTTON AGAIN

EXAMINE & SET BATTERY VOLTAGE NOMINAL VALUE
1. PRESS THE '+ ARROW' OR '- ARROW' BUTTON UNTIL THE DESIRED CHANNEL IS DISPLAYED.
   DISPLAY: PS-BA: 13.83V NORMAL
2. VERIFY THE DISPLAYED READING WITH A DIGITAL VOLTMETER
3. PRESS THE 'SELECT' BUTTON, AND THE CRTU DISPLAY WILL SWITCH BETWEEN CURRENT/SAVED NOMINAL VOLTAGE VALUES.
   DISPLAY: NOMINAL ON #6? (CURRENT) 13.83
   DISPLAY: SAVED NOMINAL 6 (STORED) 12.69
4. PRESS THE 'SELECT' BUTTON AND THE CURRENT OR 'NOMINAL ON' VALUE WILL BE SAMPLED AND STORED AS THE 'SAVED NOMINAL' VALUE
5. VERIFY THE 'NOMINAL ON' AND 'SAVED NOMINAL' VALUES ARE EQUIVALENT. REPEAT STEPS #1 THRU #3 & PRESS THE 'CANCEL' BUTTON.

TO BE VOIDED
IRG WO 10468

SOUTH ELGIN, IL
E. STATE STREET
M.P. 39.15
BELVIDERE SUBDIVISION
D.O.T.#174 543W
PROJ.#

2	REV. 08-22-07 REPLACE PMD-1 WITH MS2000 AT E. STATE STREET M.P. 39.15 A.F.E. OE REC. #14548 05-23-07 MAW/CTC/ /JJF	REV. 11-10-01 INSTALLED CRTU W.O. 3327 9-11-01 GLK/WITT/WITT/EML	MODIFICATION LEVEL: Q.A. LAST LEVEL CHK'D. / LAST LEVEL MOD. THIS TYP. / LAST LEVEL BY DESIGNER. / CHANGED FROM TYP.? Y/N

UNION PACIFIC — QUALITY PRODUCTIVITY SAFETY — SIGNAL DESIGN

DES: WITT IND
DIG: WITT IND
CHK: EML
A.F.E. 3327
ID= BEV03915.00ACV

UNION PACIFIC RAILROAD
WEST CHICAGO, ILLINOIS
TO END OF TRACK CROSSING CIRCUITS
Office of Sr.AVP Engineering - Signal/TCO OMAHA NEBR.

DATE 07-01-01
SHEET .00AC
DWG 39.15
BEV

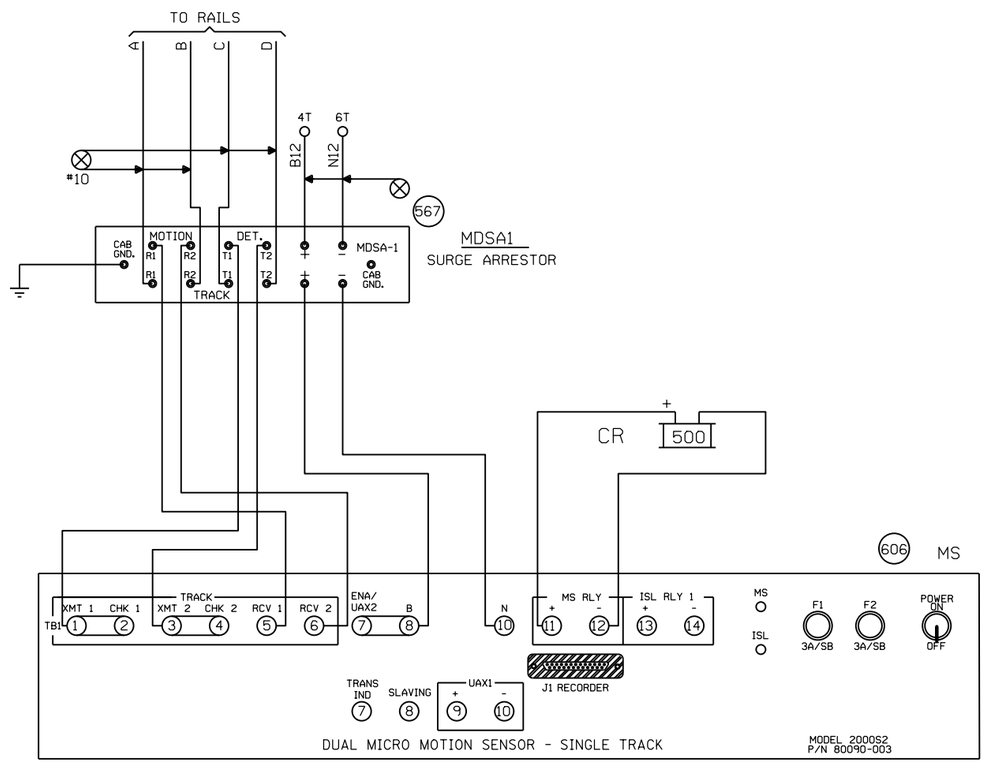

NOTE:

EACH TRANSMITTER TO RAIL WIRE FROM TB1-1 AND TB1-2 MUST NOT EXCEED THE MAXIMUM LENGTH SPECIFIED IN THE TABLE SHOWN BELOW. THE RECEIVER WIRE LENGTH IS NOT CRITICAL. DOES NOT APPLY TO 6 TRACK WIRE APPLICATION.

"Mf" FREQUENCY (HZ)	MAXIMUM TRANSMIT WIRE LENGTH (FEET)
86	100
114	125
156	150
211	200
285-970	250

⊗ = TWISTED WIRES INSULATED 1 TWIST PER FT.

TO BE VOIDED

IRG WO 10468

SOUTH ELGIN, ILLINOIS
MILL STREET
M.P. 39.15
BELVIDERE SUBDIVISION
D.O.T.#174 544D

1 REV.	08-22-07
REPLACE PMD-1 WITH MS2000 AT MILL STREET M.P. 39.15 A.F.E. OE REC. #14548 05-23-07 MAW/CTC/ /JJF	

MODIFICATION LEVEL	
Q.A. LAST LEVEL CHK'D.	DD
LAST LEVEL MOD. THIS TYP.	DB
LAST LEVEL BY DESIGNER.	DP
CHANGED FROM TYP.? Y/N	Y

UNION PACIFIC
QUALITY PRODUCTIVITY SAFETY
SIGNAL DESIGN

DES:
DIG: CTC
CHK:
A.F.E.
ID= BEV3915.01CV

UNION PACIFIC RAILROAD
W. CHICAGO, ILLINOIS TO
END OF TRACK
CROSSING CIRCUITS
Office of Sr AVP Engineering - Signal/TCO Omaha, Nebraska

DATE 08-22-07
SHEET 01C
DWG 39.15
BEV

(REV. 01.02.21) (MS1TKBFC.4)

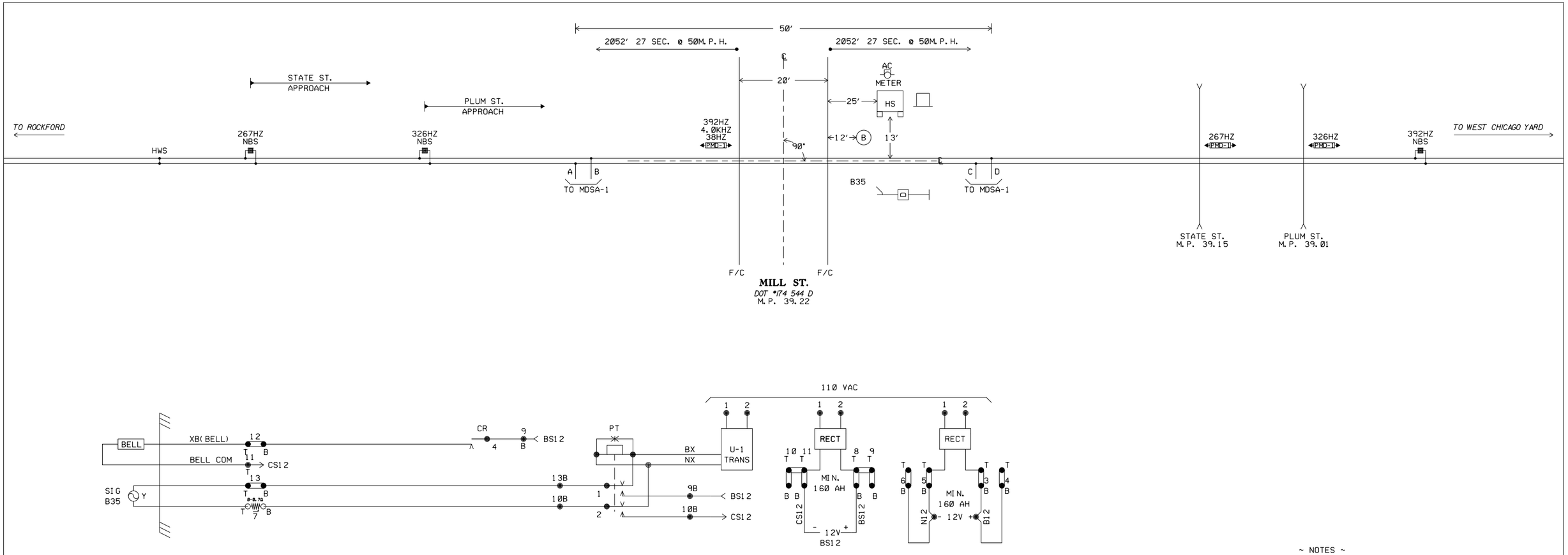

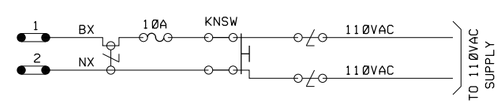

~ NOTES ~

1. HIGH SINGLE TO BE A MINIMUM OF 25' FROM CENTERLINE OF TRACK AND 30' FROM EDGE OF ROADWAY.
2. THE C-PT HAVE HEAVY-DUTY CONTACTS.
3. ADJUST LIGHT CIRCUITS (AC & DC) TO OBTAIN A MIN. OF 9.2 VOLTS TO A MAX OF 9.8 VOLTS AT LAMPS.
4. THE PT WILL OPERATE ON 10-15 VOLT AC.
5. FLASHER VARIABLE RES. UNITS TO BE 0.7 OHMS.
6. USE 10 VOLT-25 WATT LAMPS.
7. USE #10 STRANDED WIRE ON FLASHER CIRCUITS.
8. PLANVIEW NOT TO SCALE.
9. F/C = FACE OF CURB.
10. BELL ONLY.

TO BE VOIDED

IRG WO 10468

REVISIONS

REV.	
4/2/96	SPEED UPGRADE W.O. 17985 2/96 JWM/HAR/ABS
11-10-01	ADDED APPROACH INFORMATION WITT

UNION PACIFIC
QUALITY PRODUCTIVITY SAFETY
SIGNAL DESIGN

S. ELGIN, IL
MILL ST.
M.P. 39.22

BEV03922V.00C

MATCH TO: BEV03915.00C

SYSTEM$TIME$$$$$$

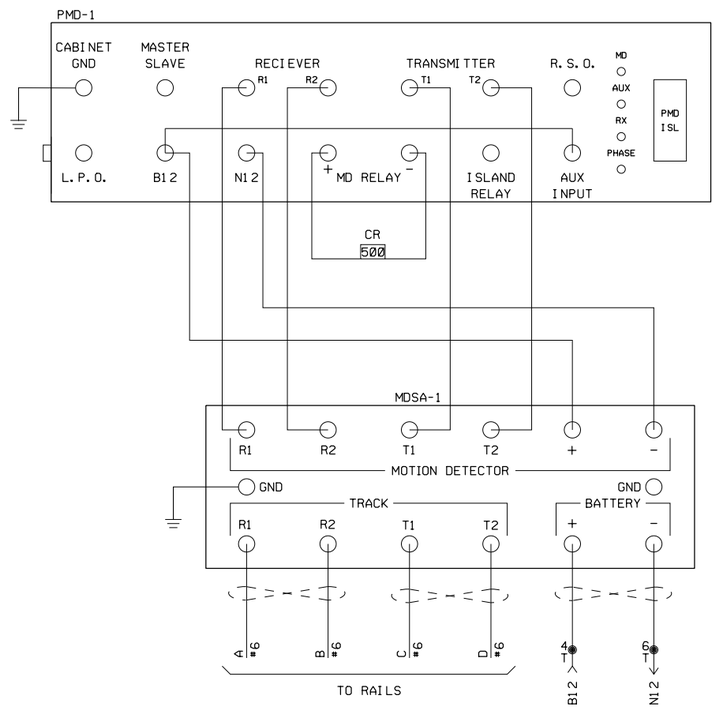

PMD-1 ( ) SWITCH OPTION TABLE

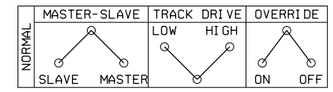

PMD-1 ( ) FREQ. --- 392HZ

ISLAND CARRIER FREQ. --- 4.0KHZ

ISLAND SUBTONE FREQ. --- 38 HZ

WIRING REQUIREMENTS

THE FOLLOWING WIRE GAUGES WILL BE CONSIDERED
THE MINIMUM ACCEPTABLE FOR PROPER OPERATION.

POWER LEADS	# 16 (MUST BE TWISTED)
CONNECTIONS FROM PMD CABINET TO MDSA-1	# 14 AWG (WIRES ON TERMS R1,R2 T1 & T2 MUST BE TWISTED.)
TRACK LEADS	# 6 AWG (ALL WIRES MUST BE TWISTED & WELDED.)
RELAY OUTPUT & AUXILIARY INPUT	# 20 (MUST BE TWISTED)
GROUND WIRE FROM MDSA-1 TO CASE	#6 AWG DIRECTLY TO PRIME GROUND TERMINALS (NO SHARP BENDS)

TO BE VOIDED

IRG WO 10468

REVISIONS

REV.	
4/2/96	SPEED UPGRADE
2/96	W.O. 17985
JWM/HAR/ABS	

UNION PACIFIC
QUALITY PRODUCTIVITY SAFETY
SIGNAL DESIGN

S. ELGIN, IL
MILL ST.
M.P. 39.22

BEV03922.01C

SYSTEM$TIME$$$$$$