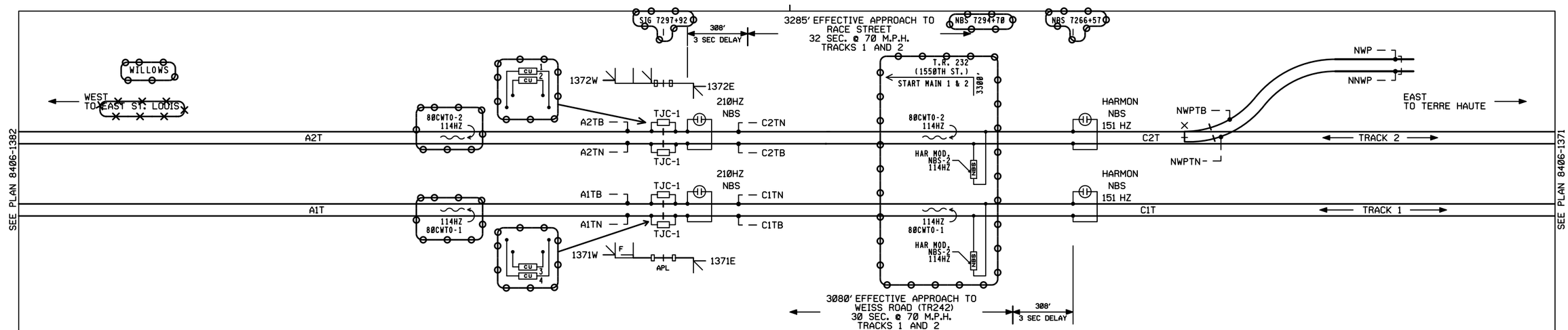

FIELD NOTE: VERIFY WESTWARD SIGNAL TRACK CIRCUIT TAGGING ON SHEETS 1, 2 AND 3

REVISIONS					
4	06-09-00	SWE	SWE	SWE	PLAN REVISED ACCOUNT. TERRE HAUTE-REPLACE MICROCODE WITH ELECTROCODE. CSX PROJ. NO. IN1999097 CSX OP/AFE NO. A24513 IN SERVICE. 09-06-00 PER. HMH REVISED. 10-26-00
5	04-30-12	IRC	IRC	IRC	PLAN REVISED ACCOUNT. INSTALL ACTIVE WARNING DEVICES AT T.R. 232 (1550TH ST.) CSX PROJ. NO. IL2012010 CSX OP/AFE NO. IL0352 IN SERVICE. -------- PER. XXX REVISED. --------
1	6-15-84	LMC	IRS		TCS TERRE HAUTE TO EAST ST. LOUIS SYSTEM FILE NO: WO/AFE NO: JW347 PFC NO. 2 IN SERVICE: 6-26-85 PER: JED
2	9-10-86	FCH	TDK	FLK	PLAN REVISED ACCOUNT SHUNTS ADDED FOR WEISS RD. MINOR CHANGES MADE TO MICROCODE UNIT SYSTEM FILE NO: H555 WO/AFE NO: 48625 PFC NO. 2 IN SERVICE: 10-22-90 PER: EMW
3	1-16-87	FCH	WRG	ELE	REVISED ACCOUNT CHANGES AT RACE STREET. SYSTEM FILE NO: WO/AFE NO: PFC NO. 2 IN SERVICE: 10-22-90 PER: EMW

REV	DATE	CKD BY

NOTES

▭ = FOR MATERIAL REFERENCE SEE PLAN S-1002

⊗ = DENOTES TWISTED PAIR

GROUND IN ACCORDANCE WITH CS-9001-A

CU-1 THRU 4 ARE HAR MOD. TJC-1A, 114HZ TJC.

TJC-1 COUPLES ARE HAR. MOD. TJC-1A 151HZ

C&S CAD

invensys Rail

PROJ #. IL2012010
DES BY. S. SPENCE
CHK BY. D. ALBRIGHT
DATE. 04-30-12

= IN
= OUT
= NOTE
= EXISTING

CONRAIL

INDIANAPOLIS DIVISION — ST. LOUIS LINE

TEUTOPOLIS, ILL

AUTO SIGNALS 1371 AND 1372 E&W

TITLE, NOTES, LOCATION PLAN AND REVISIONS

PHILADELPHIA, PA.

APPROVED: J. Pellegrini, PE CAD — CHIEF ENGINEER - C&S

ISSUE DATE: JUNE 15, 1984 — 8406-1378

JED DRV DRV REV. 4 5 06-09-00 04-30-12 — SHEET 1 OF 5

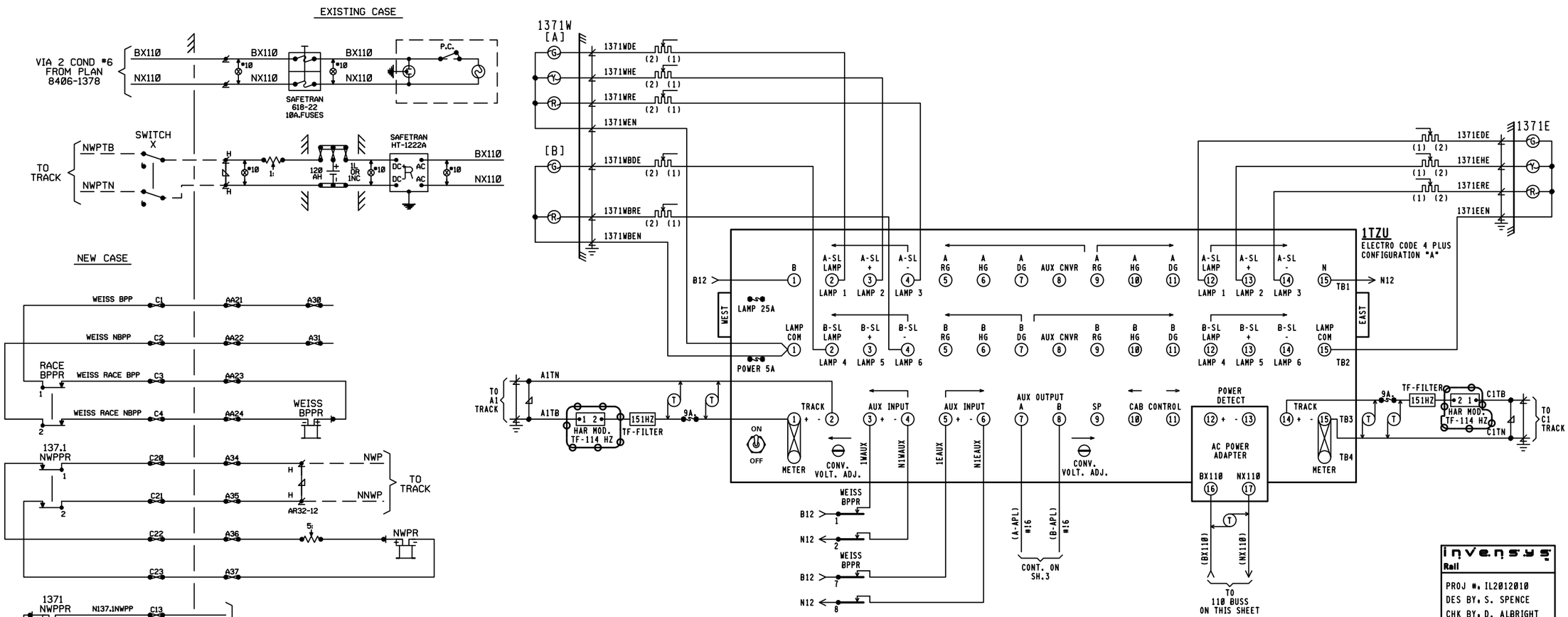

NEW CASE RELAY FUNCTIONS

RACE BPPR	137.1 NWPR
1- NWPP	1- NWPP
2-NNWPP	2-NNWPP
3-	3-
4-	4-

REV	DATE	CKD BY

C&S CAD

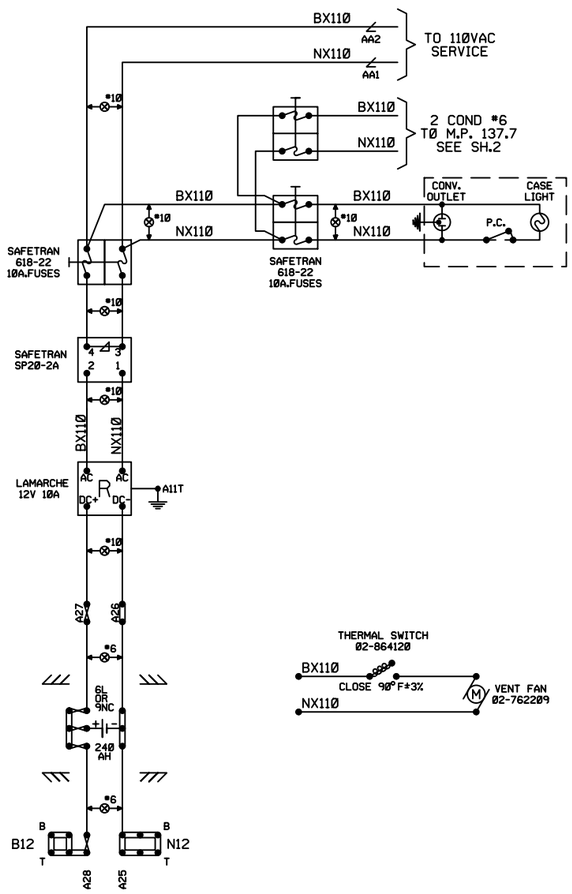

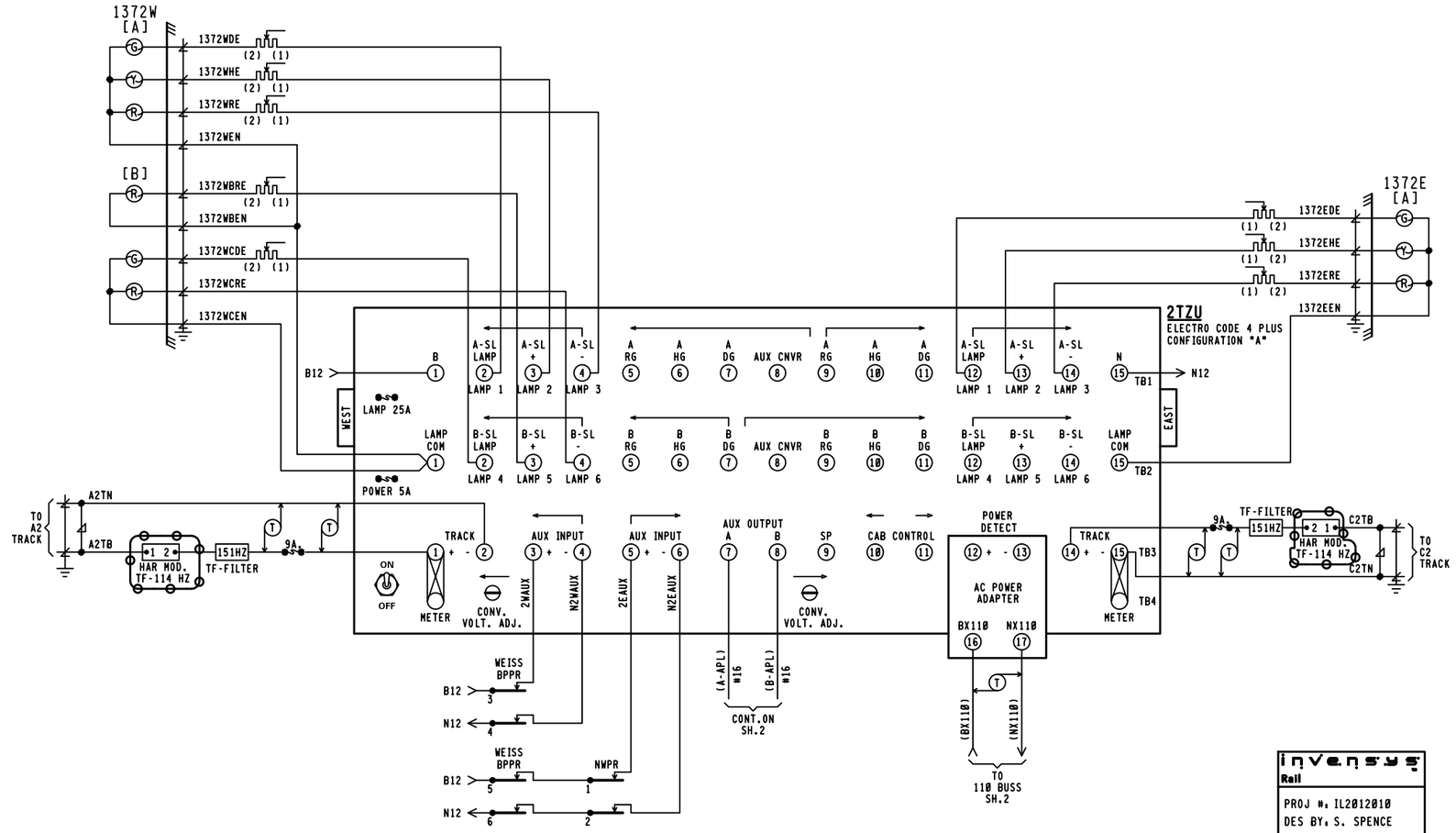

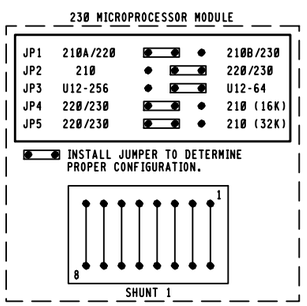

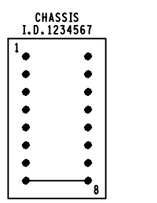

EXE NAME EC40-50 REV. 06
CS U2 $ AE14 CS U4 $ 2F3F
APP NAME CRCLAA REV. 1
CS U1 & U3 $ 1CBA

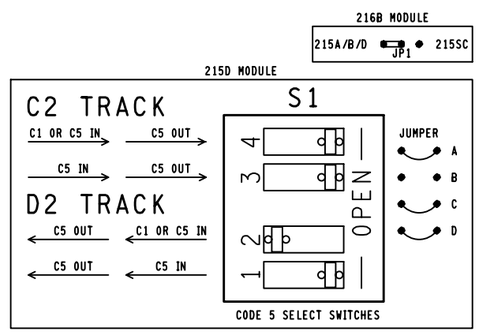

REV	DATE	CKD BY

invensys Rail

PROJ #. IL2012010
DES BY. S. SPENCE
CHK BY. D. ALBRIGHT
DATE. 04-30-12

NOTE.

1. SIGNAL LIGHT RESISTORS ARE 1 OHM VARIABLE.
2. AC POWER ADAPTER - HARMON PART # 810-083004-018
   PROGRAM NOTE. SPECIAL PROGRAM REQUIRED

= IN
= OUT

CONRAIL

AUTO SIG 1371 AND 1372 E&W — TEUTOPOLIS, ILL

ELECTROCODE
TRACK 2 CIRCUITS AND POWER DISTRIBUTION
SIG 1372 E&W

ISSUE DATE: JUNE 15, 1984 — 8406-1378

JED DRV DRV REV. 4 5 6 — 06-09-00 — SHEET 3

04-30-12

C&S CAD

SAFETRAN HIGH DOUBLE CASE

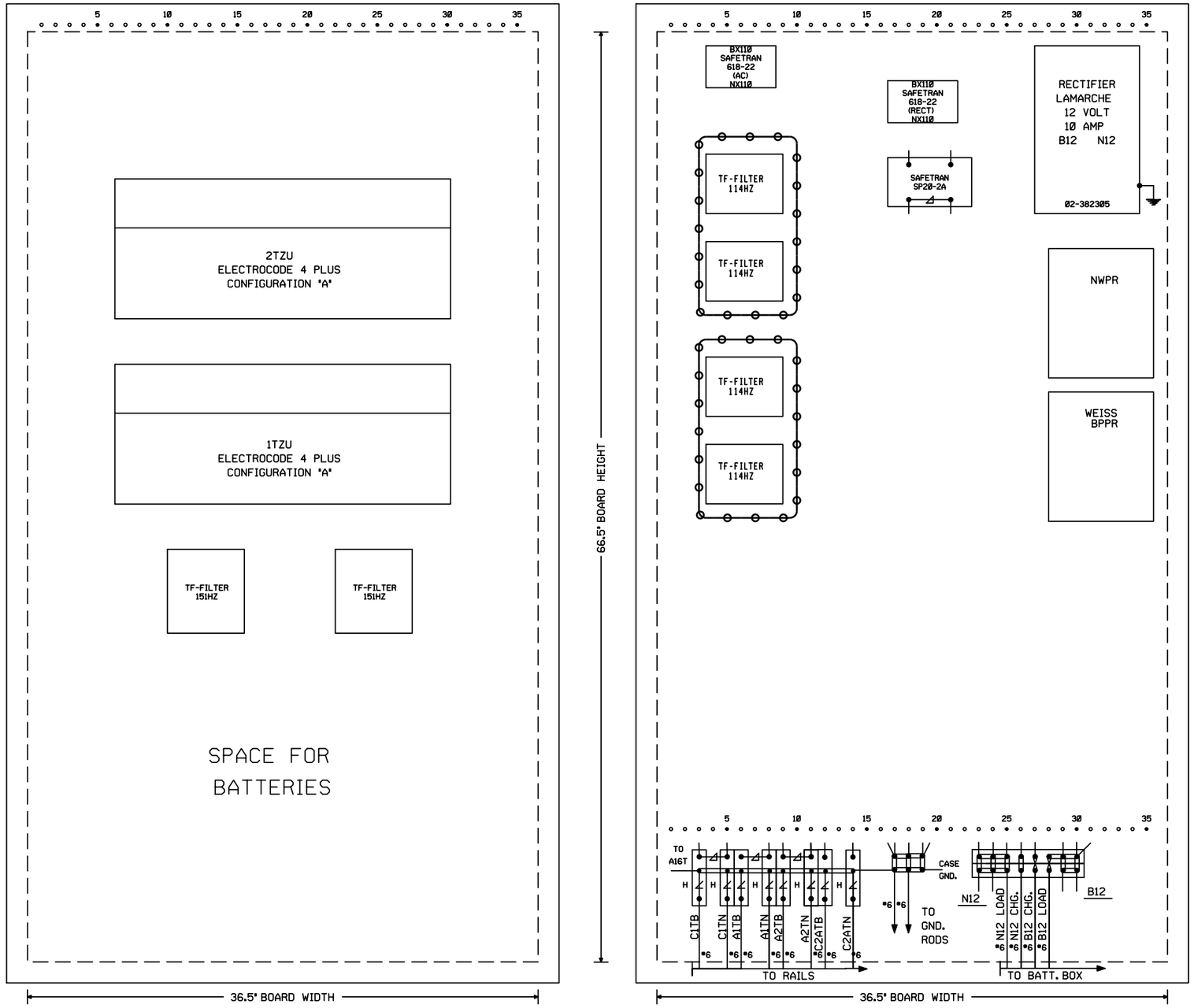

REV	DATE	CKD BY

invensys
Rail

PROJ #: IL2012010
DES BY: S SPENCE
CHK BY: D. ALBRIGHT
DATE: 04-30-12

= IN
= OUT

CONRAIL

AUTO SIG 1371 AND 1372 E&W — TEUTOPOLIS, ILL

ELECTROCODE
CASE DETAIL - HIGH DOUBLE
(FRONT)

ISSUE DATE: JUNE 15, 1984		8406-1378
REV. 4	06-09-00	SHEET 4
5	04-30-12	

C&S CAD

REVISIONS

1 02-04-86

NEW PLAN DRAWN ACCOUNT
WARNING DEVICES ADDED AT
WEISS RD.(TR242)

SYSTEM FILE NO: H5556
WO/AFE NO: 48625
IN SERVICE: 01-14-87
PER: JJA

DDD | MAW

04-24-00 ABC IL1999036, IL1999035
IL1999037, IL1999038, IL1999039

2 04-30-12 IRC | IRC | IRC

PLAN REVISED ACCOUNT.
INSTALLATION ACTIVE WARNING DEVICES
AT T.R. 232 (1550TH ST.)

CSX PROJ. NO. IL2012010
CSX OP/AFE NO. IL0352
IN SERVICE. --------
PER. XXX
REVISED. --------

SWS | DBA

INDEX

SH. NO.	CONTENTS	REVISION NO. 1	2	3	4	5	6	7
1	TITLE, NOTES, INDEX AND REVISIONS	✓						
2	LOCATION PLAN	✓						
3	POWER DISTRIBUTION	✓						
4	DUAL PHASE MOTION DETECTOR SYSTEM-HARMON PMD CIRCUITS	✓						
5	GATE CONTROL, LIGHTING CIRCUITS AND CABLE TERMINATIONS	✓						
6	GATE MECHANISM TYPICALS	✓						
7	RELAY RACK AND CONNECTIONS - HOUSE LAYOUT	✓						
8	SHELF ARRANGEMENT	✓						
9	TERMINAL BOARD ARRANGEMENT	✓						
10								

NOTES

▭ = FOR MATERIAL REFERENCE SEE PLAN S-1002

⊗ = DENOTES TWISTED PAIR
GROUND IN ACCORDANCE WITH CS-9001-A

invensys Rail

PROJ #. IL2012010
DES BY. S. SPENCE
CHK BY. D. ALBRIGHT
DATE. 04-30-12

⊖⊖⊖ = IN
⊗⊗⊗ = OUT

T.R. 242 (WEISS RD.) 546436L

EFFINGHAM IL M.P. QS-138.20

CSX TRANSPORTATION
RAIL TRANSPORT GROUP ENGINEERING
COMMUNICATIONS AND SIGNALS

STATE LINE TO ST. LOUIS
EFFINGHAM IL
INDEX AT
WEISS RD. (TR 242) 546436L M.P. QS138.20

DESIGNED	DIGITIZED	CHECKED	DATE
			04-04-86

DRAWING	SHEET NO	NEXT SH	NEXT FILE	NEXT SH	FILE	SHEET
8406-1382	1	2	QS13820	S01	QS13820	I01

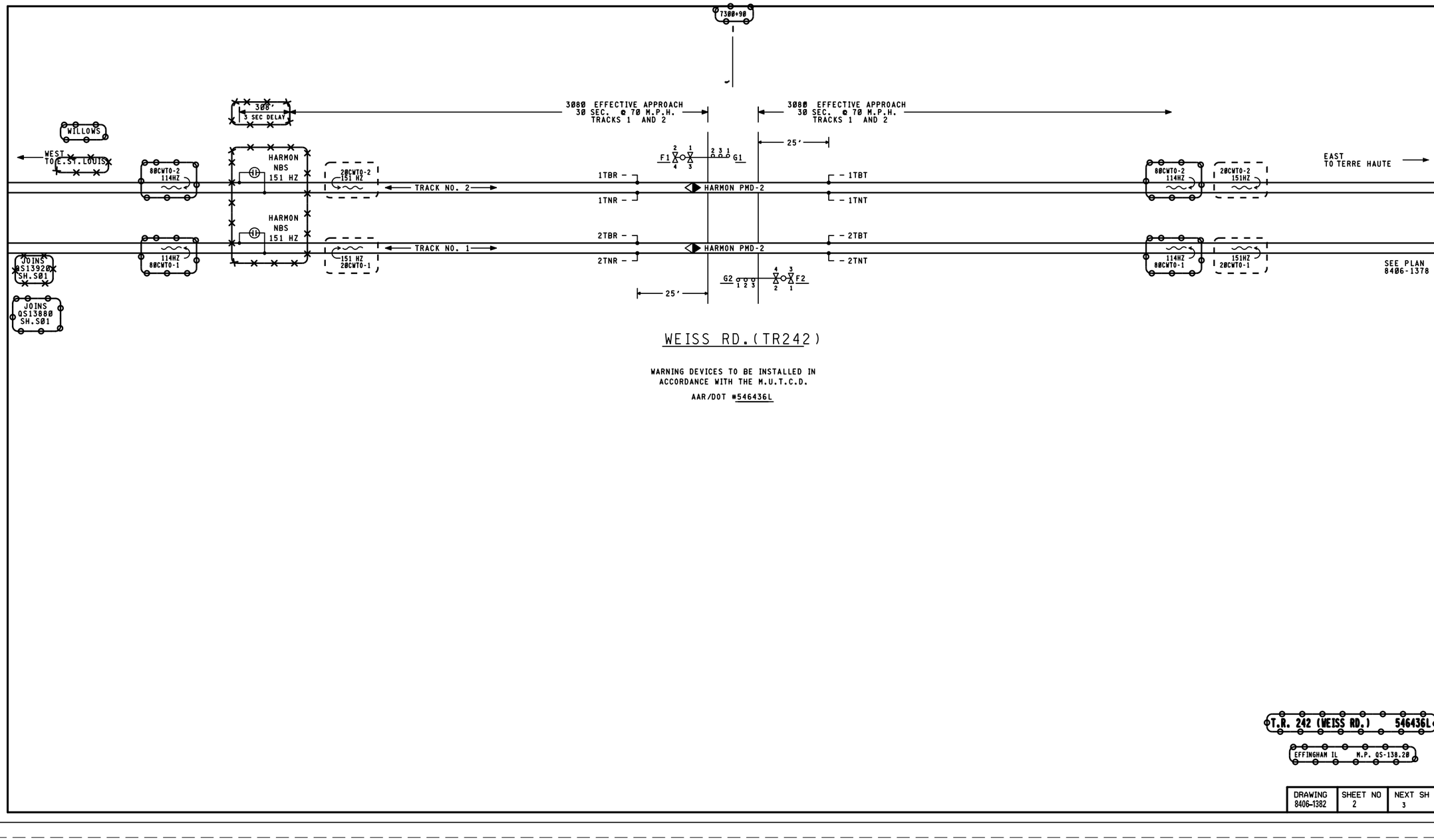

WEISS RD.(TR242)

WARNING DEVICES TO BE INSTALLED IN
ACCORDANCE WITH THE M.U.T.C.D.

AAR/DOT #546436L

T.R. 242 (WEISS RD.) 546436L

EFFINGHAM IL M.P. QS-138.20

REVISIONS

04-24-00 ABC IL1999036, IL1999035
IL1999037, IL1999038, IL1999039

Invensys Rail

PROJ #: IL2012010
DES BY: S. SPENCE
CHK BY: D. ALBRIGHT
DATE: 04-30-12

= IN
= OUT
( ) = EXISTING

CSX TRANSPORTATION

RAIL TRANSPORT GROUP ENGINEERING
COMMUNICATIONS AND SIGNALS

STATE LINE TO ST. LOUIS

EFFINGHAM, IL

TRACK AND SIGNAL PLAN AT

WEISS RD. (TR 242) 546436L M.P. QS138.20

DESIGNED	DIGITIZED	CHECKED	DATE
			04-04-06

DRAWING	SHEET NO	NEXT SH	NEXT FILE	NEXT SH	FILE	SHEET
8406-1382	2	3	QS13820	E01	QS13820	S01

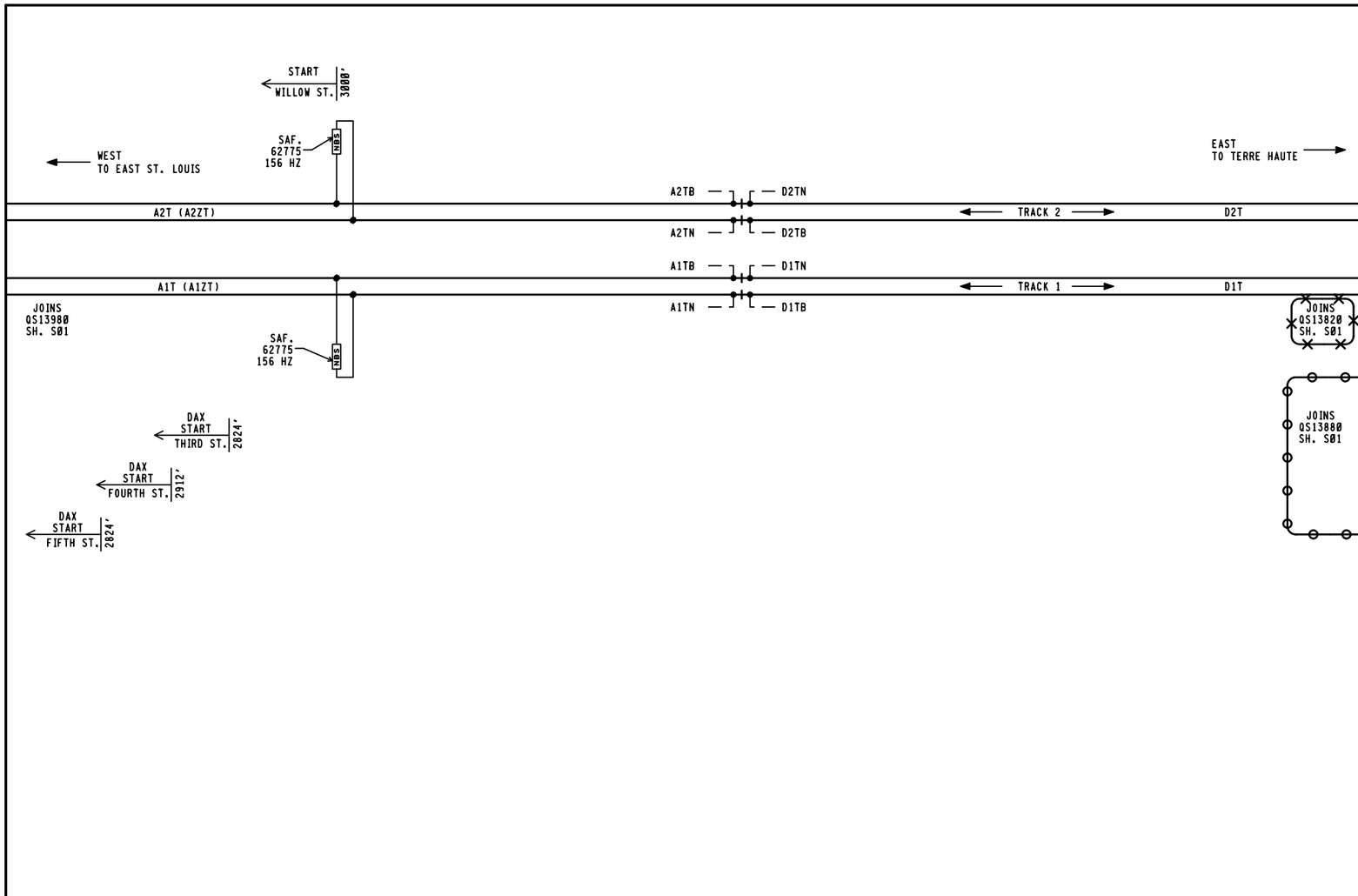

NOTE. FIELD TO VERIFY EASTWARD SIGNAL TRACK CIRCUIT TAGGING ON SHEETS S01, C01, AND C02.

CUT SECTION

EFFINGHAM, IL M.P. QS-139.20

REVISIONS

1 6-18-84

TCS TERRE HAUTE
TO EAST ST. LOUIS.

SYSTEM FILE NO:
WO/AFE NO: JW347 PFC NO. 2
IN SERVICE: 6-26-85
PER: JED

MAW | MAW

04-24-00 ABC IL1999036, IL1999035
IL1999037, IL1999038, IL1999039

2 06-09-00 SWE | SWE | SWE

PLAN REVISED ACCOUNT,
TERRE HAUTE - REPLACE
MICROCODE WITH ELECTROCODE

CSX PROJ. NO. IN1999097
CSX OP/AFE NO. A24513
IN SERVICE. 09-06-00
PER. HMH
REVISED. 10-26-00

LMC | IRS

3 04-30-12 IRC | IRC | IRC

PLAN REVISED ACCOUNT,
INSTALLATION ACTIVE WARNING DEVICES
AT T.R. 232 (1550TH ST.)

CSX PROJ. NO. IL2012010
CSX OP/AFE NO. IL0352
IN SERVICE. --------
PER. XXX
REVISED. --------

SWS | DBA

invensys Rail

PROJ #. IL2012010
DES BY. S. SPENCE
CHK BY. D. ALBRIGHT
DATE. 04-30-12

= IN
= OUT
= NOTE

CSX TRANSPORTATION
RAIL TRANSPORT GROUP ENGINEERING
COMMUNICATIONS AND SIGNALS

STATE LINE TO ST. LOUIS
EFFINGHAM, IL
TRACK AND SIGNAL PLAN AT
C.S. 139.20, M.P. QS-139.20

DESIGNED	DIGITIZED	CHECKED	DATE
			06-18-84

DRAWING	SHEET NO	NEXT SH	NEXT FILE	NEXT SH	FILE	SHEET
8406-1392	1	2	QS13820	E01	QS13920	S01

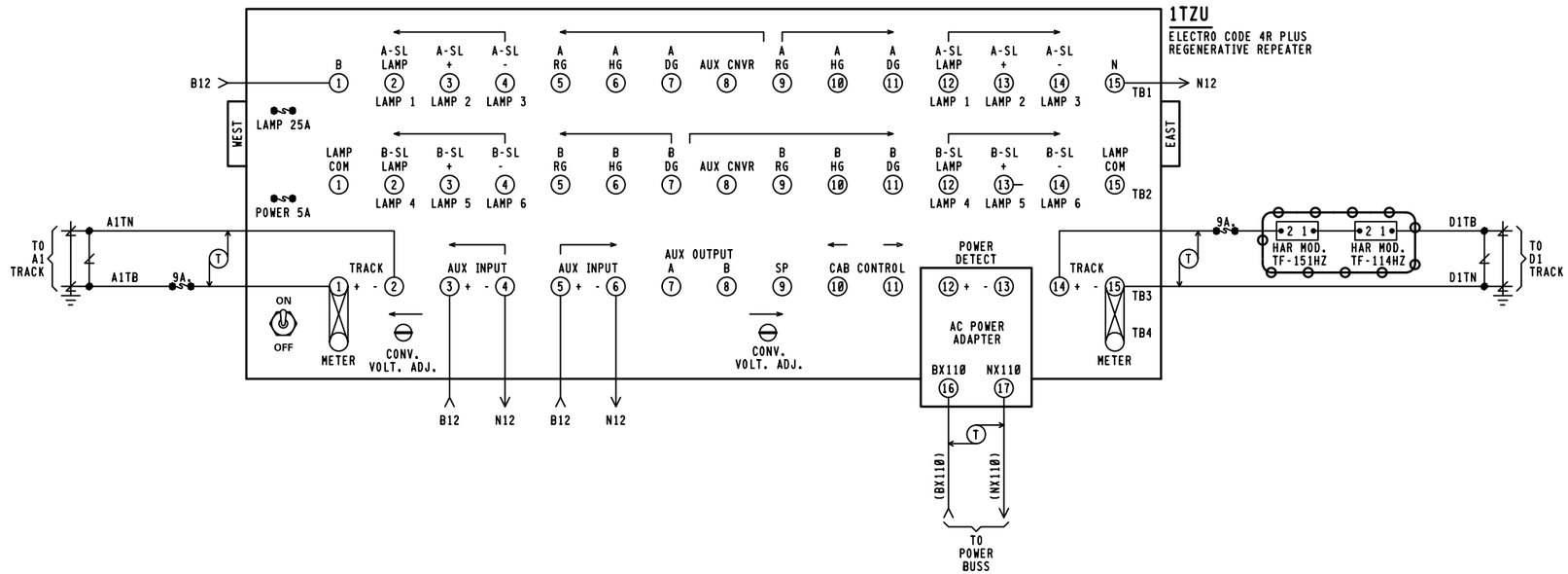

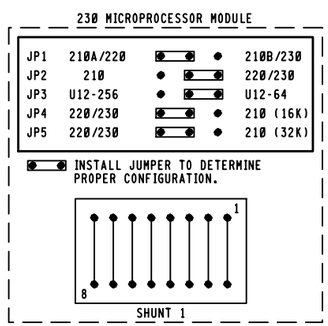

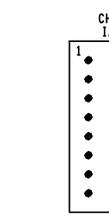

EXE NAME _____ REV. _____
CS U2 $ _____ CS U4 $ _____
APP NAME _____ REV. _____
CS U1 & U3 _____

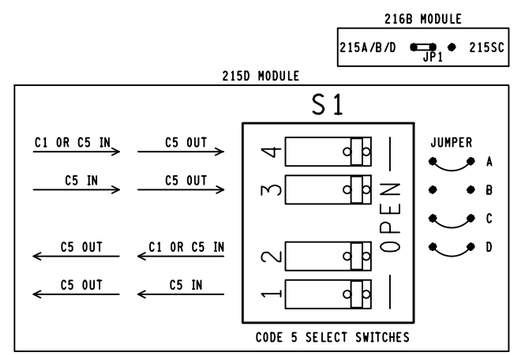

invensys Rail

PROJ #: IL2012010
DES BY: S. SPENCE
CHK BY: D. ALBRIGHT
DATE: 04-30-12

= IN
= OUT

REVISIONS
10-26-00 IRS IN1999097

CUT SECTION
EFFINGHAM, IL M.P. QS-139.20

CSX TRANSPORTATION
RAIL TRANSPORT GROUP ENGINEERING
COMMUNICATIONS AND SIGNALS

STATE LINE TO ST. LOUIS
EFFINGHAM, IL
ELECTRO CODE 4R PLUS CIRCUITS
C.S. 139.20, M.P. QS-139.20

DESIGNED	DIGITIZED	CHECKED	DATE
CSX	IRS/LMC		06-18-84

DRAWING	SHEET NO	NEXT SH	NEXT FILE	NEXT SH	FILE	SHEET
8406-1392	3	4	QS13920	C02	QS13920	C01

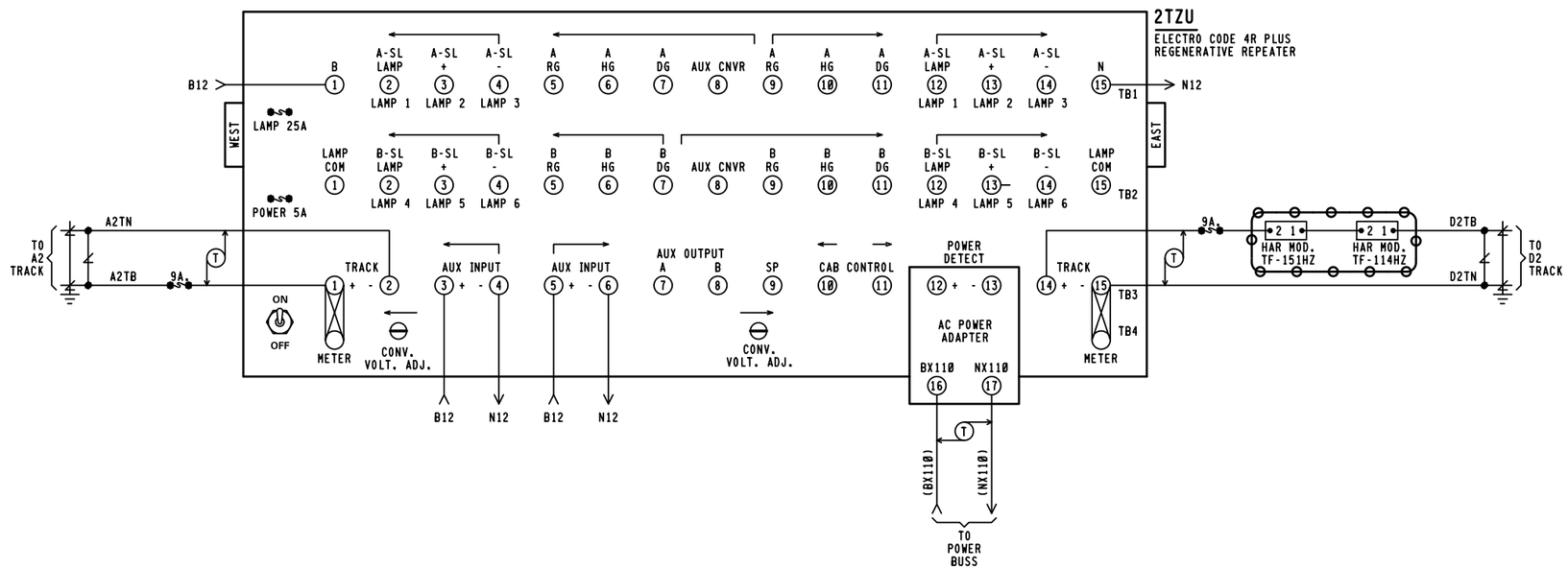

230 MICROPROCESSOR MODULE

JP1	210A/220		210B/230
JP2	210		220/230
JP3	U12-256		U12-64
JP4	220/230		210 (16K)
JP5	220/230		210 (32K)

INSTALL JUMPER TO DETERMINE PROPER CONFIGURATION.

SHUNT 1

CHASSIS I.D. XX

JUMPERS

EXE. NAME _____ REV. ____
U2 _____ U4 _____
APPL. NAME _____ REV. ____
CS. U1 & U3 _____

216B MODULE

215A/B/D JP1 215SC

215D MODULE

S1

C1 OR C5 IN → C5 OUT
C5 IN → C5 OUT
C5 OUT ← C1 OR C5 IN
C5 OUT ← C5 IN

OPEN

JUMPER A B C D

CODE 5 SELECT SWITCHES

NOTE

1. AC POWER ADAPTER - HARMON PART # 262677-000.
2. [ ] = TAGGING PURPOSES ONLY

invensys Rail

PROJ #. IL2012010
DES BY. S. SPENCE
CHK BY. D. ALBRIGHT
DATE. 04-30-12

= IN
= OUT

REVISIONS

10-26-00 IRS IN1999097

CUT SECTION

EFFINGHAM, IL M.P. QS-139.20

CSX TRANSPORTATION
RAIL TRANSPORT GROUP ENGINEERING
COMMUNICATIONS AND SIGNALS

STATE LINE TO ST. LOUIS
EFFINGHAM, IL
ELECTRO CODE 4R PLUS CIRCUITS
C.S. 139.20, M.P. QS-139.20

DESIGNED	DIGITIZED	CHECKED	DATE
CSX	IRS/LMC		06-18-84

DRAWING	SHEET NO	NEXT SH	NEXT FILE	NEXT SH	FILE	SHEET
8406-1392	4		QS13820	I01	QS13920	C02

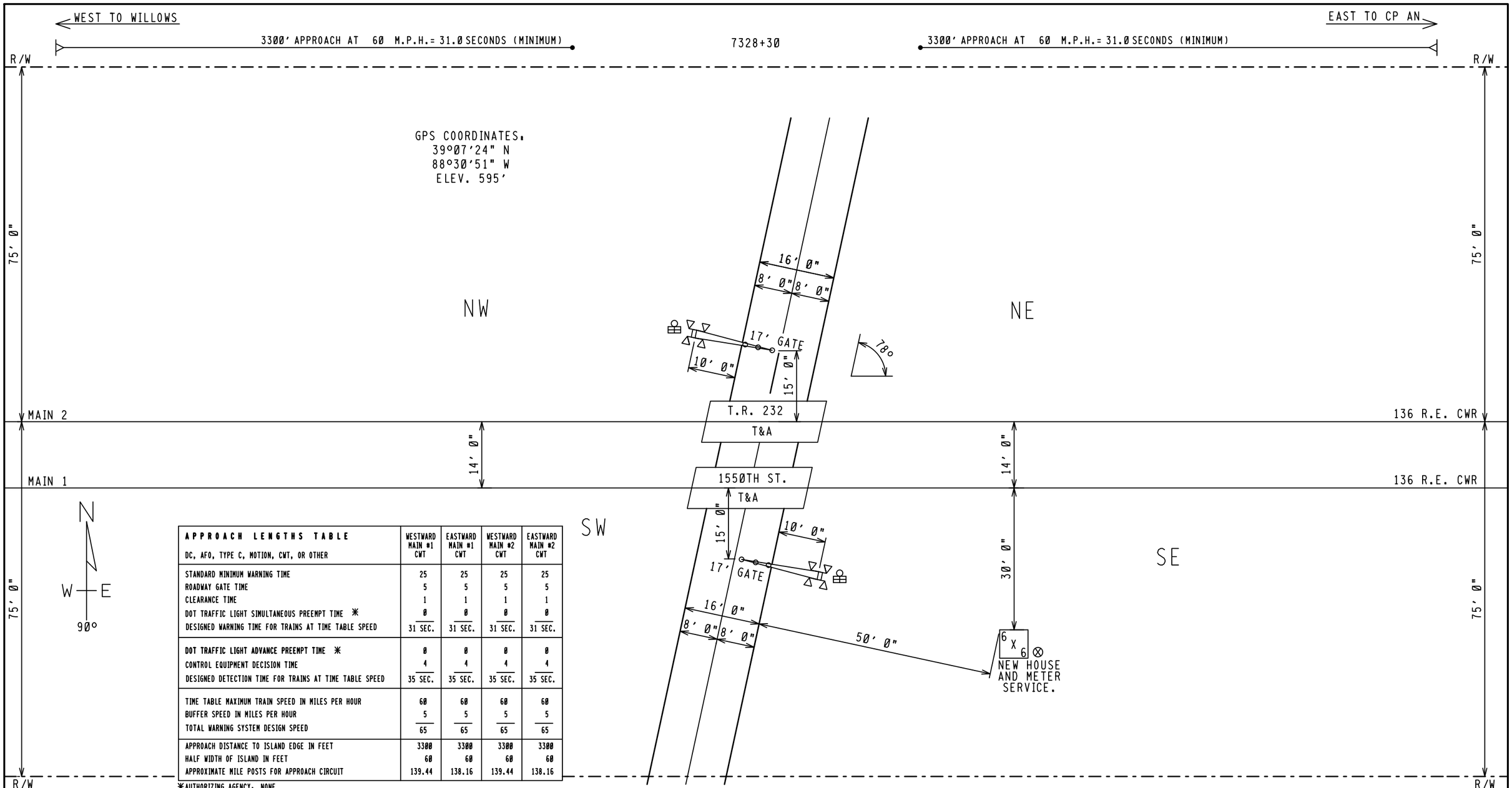

APPROACH LENGTHS TABLE DC, AFO, TYPE C, MOTION, CWT, OR OTHER	WESTWARD MAIN #1 CWT	EASTWARD MAIN #1 CWT	WESTWARD MAIN #2 CWT	EASTWARD MAIN #2 CWT
STANDARD MINIMUM WARNING TIME	25	25	25	25
ROADWAY GATE TIME	5	5	5	5
CLEARANCE TIME	1	1	1	1
DOT TRAFFIC LIGHT SIMULTANEOUS PREEMPT TIME ✳	0	0	0	0
DESIGNED WARNING TIME FOR TRAINS AT TIME TABLE SPEED	31 SEC.	31 SEC.	31 SEC.	31 SEC.
DOT TRAFFIC LIGHT ADVANCE PREEMPT TIME ✳	0	0	0	0
CONTROL EQUIPMENT DECISION TIME	4	4	4	4
DESIGNED DETECTION TIME FOR TRAINS AT TIME TABLE SPEED	35 SEC.	35 SEC.	35 SEC.	35 SEC.
TIME TABLE MAXIMUM TRAIN SPEED IN MILES PER HOUR	60	60	60	60
BUFFER SPEED IN MILES PER HOUR	5	5	5	5
TOTAL WARNING SYSTEM DESIGN SPEED	65	65	65	65
APPROACH DISTANCE TO ISLAND EDGE IN FEET	3300	3300	3300	3300
HALF WIDTH OF ISLAND IN FEET	60	60	60	60
APPROXIMATE MILE POSTS FOR APPROACH CIRCUIT	139.44	138.16	139.44	138.16

✳AUTHORIZING AGENCY: NONE
✳DATE OF REQUIREMENT: NONE
✳AMOUNT OF TIME (SEC.): NONE

NOTES:
1. WARNING DEVICES TO BE ACTIVATED BY HXP-3R2 TO PROVIDE MANDATED CONSTANT WARNING.

FILE NAME: QS13880.H01	REVISION DATES	PRODUCED FOR:	PRODUCED BY:	LEGEND	GUARD RAIL	METER SERVICE ⊗	STREET NAME: T.R. 232 (1550TH ST.)
DATE DRAWN: 04/16/2012	05-04-12 SWS	CSX TRANSPORTATION	invensys Rail	CSX ROW	O.H. POWER	POLE Ⓟ	CITY & STATE: EFFINGHAM, IL
DRAWN BY: LEWIS, CLINT	- -	RAIL TRANSPORT GROUP ENGINEERING	7775 BAYMEADOWS WAY	R/R POLELINE	FENCE	FIRE PLUG Ⓕ	PROJECT #: IL2012010
CHECKED BY: PROSPERO, ERNESTO	- -	COMMUNICATIONS AND SIGNALS	SUITE 250	GAS	WATER	SEWER CAP Ⓢ	OP #: IL0352
SSC #: JXXD02755	- -		JACKSONVILLE, FL 32256	FIBER OPTIC	SEWER	GAS VENT Ⓥ	DOT #: 546437T

PROPOSED CROSSING LAYOUT
1"=20'

	DEFAULTS AND/OR STYLE	FIELD RECORD
EVENT ANALYZER EXECUTIVE PROGRAM	VERSION 2.7, COMPILED ON NOV. 11, 2003	VERSION ____, COMPILED ON _____ (FIELD TO ENTER)
CSXT USER PROGRAM (IF LOADED)	VERSION 1.01, COMPILED ON 12-01-03 (MM-DD-YY)	VERSION , COMPILED ON _____ (FIELD TO ENTER)
SYSTEM SETTINGS		
DATE & TIME (ENABLE DAYLIGHT SAVINGS TIME = Y (YES)	MM-DD-YY 23:01:59	n/a
MILE POST	XYZ-789.01	QS-138.80
SITE NAME	MAIN ST (SR-17,US-1)	T.R. 232 (1550TH ST.)
DOT NUMBER	123456A	546437T

NOTE TO INSPECTOR: AT IN SERVICE OF EVENT ANALYZER OR UPDATE OF ITS INTERNAL EXECUTIVE PROGRAM OR ITS CSXT USER PROGRAM, THE VERSION NUMBER AND COMPILE DATES OF EACH PROGRAM MUST BE INSERTED IN THE BLANK FIELDS.

EVENT ANALYZER ETHERNET PORT SETUP	
	IP ADDRESS
ETHERNET DIAGNOSTIC PORT (TOP)	192.168.13.2
ETHERNET REMOTE PORT (BOTTOM)	192.168.13.1

BATTERY INPUTS	DC 01	DC 02	DC 03	DC 04
CHANNEL	1	2	3	4
BATTERY CHANNEL NAMES	X-B BULB BATTERY	OB ELECTRONIC BATTERY	B-G GATE BATTERY	SPARE
BATTERY CHANNEL I.D.	X-B	OB	B-G	SP
SAMPLE PERIOD	500 ms	500 ms	500 ms	10,000 ms
RESOLUTION	00.2 V	00.2 V	01.0 V	02.0 V

MODULE-DIGITAL 4 QUAD CURRENT SENSOR SERIAL NUMBER: [_____] (BLANK UNTIL AIS RECEIVED)				
RESOLUTION (AMPS RMS) : [00.2] ARMS				
AUTOMATICALLY ALLOCATED DIGITAL INPUT	DI 17	DI 18	D1 19	D1 20
DIGITAL 4 QUAD CURRENT SENSOR	1	2	3	4
NAME	E1C	E2A	E1A	E2C
ID	E1C	E2A	E1A	E2C
LIT BULB COUNT ON EACH CIRCUIT	4	4	4	4
CURRENT READING IN AMPS AT APPROXIMATE 10.0 VOLTS BULB VOLTAGE	2.6	2.6	2.6	2.6

DIGITAL INPUTS	DI 01	DI 02	DI 03	DI 04	DI 05
CHANNEL	1	2	3	4	5
NAME		ISLAND TRACK 1		MAINTENANCE PB	ISLAND TRACK 2
ID	SP	ISL 1	SP	MPB	ISL 2
ON NAME		ISL 1 UP		MAINTENANCE PB HI	ISL 2 UP
OFF NAME		ISL 1 DN		MAINTENANCE PB LOW	ISL 2 DN
ON DEBOUNCE TIME	1000 ms	100 ms	1000 ms	100 ms	100 ms
OFF DEBOUNCE TIME	1000 ms	100 ms	1000 ms	100 ms	100 ms
TOGGLE PERIOD	500 ms	500 ms	500 ms	500 ms	500 ms

CHANNEL	1	2	3	4
NAME	RELAY OUTPUT 01	RELAY OUTPUT 02	RELAY OUTPUT 03	RELAY OUTPUT 04
I.D.	RLY01	RLY02	RLY03	RLY04
ON NAME	ON	ON	ON	ON
OFF NAME	OFF	OFF	OFF	OFF
PULSE DURATION	1000 ms	1000 ms	1000 ms	1000 ms

DIGITAL INPUTS	DI 06	DI 07	DI 08	DI 09	DI 10
CHANNEL	6	7	8	9	10
NAME		STANDBY 1			ABELL REC
ID	SP	STBY1	SP	SP	ABELL-REC
ON NAME		STANDBY UNIT			ABELL RINGING
OFF NAME		PRIMARY UNIT			ABELL NOT RINGING
ON DEBOUNCE TIME	1000 ms	100 ms	1000 ms	1000 ms	100 ms
OFF DEBOUNCE TIME	1000 ms	100 ms	1000 ms	1000 ms	100 ms
TOGGLE PERIOD	500 ms	500 ms	500 ms	500 ms	500 ms

PORT	USER	AUX 1	MODEM/AUX 2
BAUD RATE	38400	9600	9600
PARITY	N	N	N
DATA BITS	8	8	8
STOP BITS	1	1	1
FLOW CONTROL	NONE	NONE	NONE

DIGITAL INPUTS	DI 11	DI 12	DI 13	DI 14	DI 15	DI 16
CHANNEL	11	12	13	14	15	16
NAME	BBELL REC	DTMF/TEST	GATE VERTICAL	GATE HORIZONTAL	XR	AC POWER OFF
ID	BBELL-REC	DTMF	GP	GDP	XR	POR
ON NAME	BBELL RINGING	DTMF TEST ON	GATE VERTICAL	GATE HORIZONTAL	XR UP	AC POWER ON
OFF NAME	BBELL NOT RINGING	DTMF TEST OFF	GATE NOT VERTICAL	GATE NOT HORIZONTAL	XR DN	AC POWER OFF
ON DEBOUNCE TIME	100 ms	100 ms	100 ms	100 ms	100 ms	100 ms
OFF DEBOUNCE TIME	100 ms	100 ms	100 ms	100 ms	100 ms	100 ms
TOGGLE PERIOD	500 ms	500 ms	500 ms	500 ms	500 ms	500 ms

NEW WORK

invensys Rail

PROJ #: IL2012010
DES BY: S. SPENCE
CHK BY: D. ALBRIGHT
DATE: 04-30-12

= NOTE

2TRKPMD3CPML.C06
REV. 12-14-09

CSX TRANSPORTATION
RAIL TRANSPORT GROUP ENGINEERING
COMMUNICATIONS AND SIGNALS

T.R. 232 (1550TH ST.) 546437T

RECORDER PROGRAM
EFFINGHAM, IL M.P. QS-138.80

DESIGNED	DIGITIZED	CHECKED	DATE
IRC/SWS	IRC/SWS	IRC/DBA	04-30-12

DESIGN DATE	REV. NO.	DRAWING	SHEET NO	FILE	SHEET
04-30-12	1	-----	-----	QS13880	C06

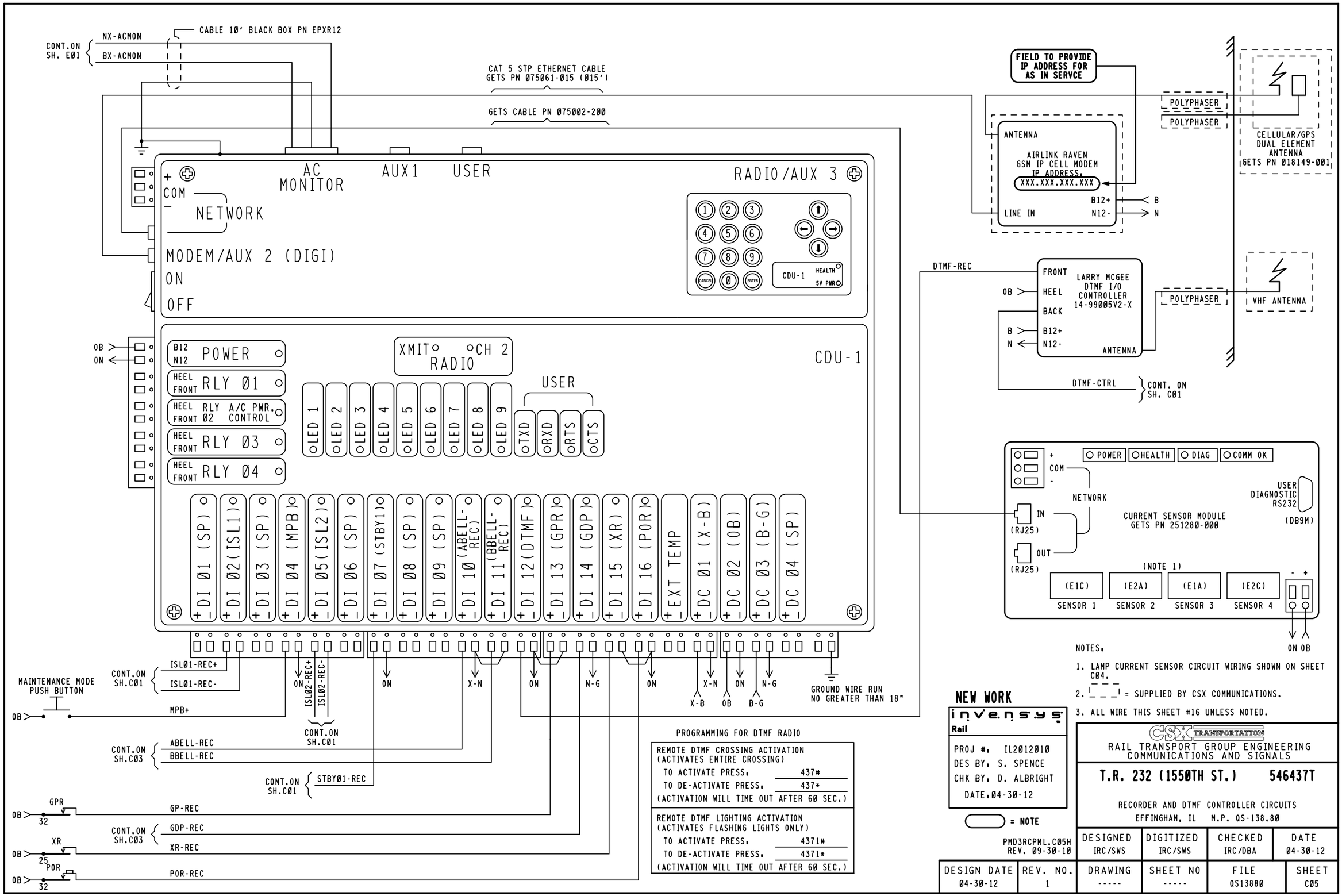
CONT.ON SH. E01
NX-ACMON
BX-ACMON
CABLE 10' BLACK BOX PN EPXR12
CAT 5 STP ETHERNET CABLE GETS PN 075061-015 (015')
GETS CABLE PN 075002-200
FIELD TO PROVIDE IP ADDRESS FOR AS IN SERVCE
POLYPHASER
POLYPHASER
CELLULAR/GPS DUAL ELEMENT ANTENNA GETS PN 018149-001
ANTENNA
AIRLINK RAVEN GSM IP CELL MODEM IP ADDRESS. XXX.XXX.XXX.XXX
B12+
N12-
LINE IN
B
N
AC MONITOR
AUX1
USER
RADIO/AUX 3
COM
NETWORK
MODEM/AUX 2 (DIGI)
ON
OFF
CDU-1
HEALTH
5V PWR
DTMF-REC
FRONT
HEEL
BACK
LARRY MCGEE DTMF I/O CONTROLLER 14-99005V2-X
B12+
N12-
ANTENNA
POLYPHASER
VHF ANTENNA
DTMF-CTRL
CONT. ON SH. C01
OB
ON
B12 N12 POWER
HEEL FRONT RLY 01
HEEL FRONT RLY 02 A/C PWR. CONTROL
HEEL FRONT RLY 03
HEEL FRONT RLY 04
XMIT CH 2
RADIO
CDU-1
LED 1
LED 2
LED 3
LED 4
LED 5
LED 6
LED 7
LED 8
LED 9
USER
TXD
RXD
RTS
CTS
DI 01 (SP)
DI 02 (ISL1)
DI 03 (SP)
DI 04 (MPB)
DI 05 (ISL2)
DI 06 (SP)
DI 07 (STBY1)
DI 08 (SP)
DI 09 (SP)
DI 10 (ABELL-REC)
DI 11 (BBELL-REC)
DI 12 (DTMF)
DI 13 (GPR)
DI 14 (GDP)
DI 15 (XR)
DI 16 (POR)
EXT TEMP
DC 01 (X-B)
DC 02 (OB)
DC 03 (B-G)
DC 04 (SP)
POWER
HEALTH
DIAG
COMM OK
COM
NETWORK
IN
(RJ25)
OUT
(RJ25)
CURRENT SENSOR MODULE GETS PN 251280-000
USER DIAGNOSTIC RS232
(DB9M)
(NOTE 1)
(E1C)
(E2A)
(E1A)
(E2C)
SENSOR 1
SENSOR 2
SENSOR 3
SENSOR 4
ON OB
ISL01-REC+
ISL01-REC-
CONT.ON SH.C01
MAINTENANCE MODE PUSH BUTTON
MPB+
ISL02-REC+
ISL02-REC-
CONT.ON SH.C01
ABELL-REC
BBELL-REC
CONT.ON SH.C03
STBY01-REC
CONT.ON SH.C01
GPR
GP-REC
32
GDP-REC
CONT.ON SH.C03
XR
XR-REC
25
POR
POR-REC
32
X-N
N-G
X-B
OB
B-G
GROUND WIRE RUN NO GREATER THAN 18"
PROGRAMMING FOR DTMF RADIO
REMOTE DTMF CROSSING ACTIVATION (ACTIVATES ENTIRE CROSSING)
TO ACTIVATE PRESS. 437#
TO DE-ACTIVATE PRESS. 437*
(ACTIVATION WILL TIME OUT AFTER 60 SEC.)
REMOTE DTMF LIGHTING ACTIVATION (ACTIVATES FLASHING LIGHTS ONLY)
TO ACTIVATE PRESS. 4371#
TO DE-ACTIVATE PRESS. 4371*
(ACTIVATION WILL TIME OUT AFTER 60 SEC.)
NOTES.
1. LAMP CURRENT SENSOR CIRCUIT WIRING SHOWN ON SHEET C04.
2. = SUPPLIED BY CSX COMMUNICATIONS.
3. ALL WIRE THIS SHEET #16 UNLESS NOTED.
NEW WORK
invensys Rail
PROJ #. IL2012010
DES BY. S. SPENCE
CHK BY. D. ALBRIGHT
DATE.04-30-12
= NOTE
PMD3RCPML.C05H REV. 09-30-10
CSX TRANSPORTATION
RAIL TRANSPORT GROUP ENGINEERING COMMUNICATIONS AND SIGNALS
T.R. 232 (1550TH ST.) 546437T
RECORDER AND DTMF CONTROLLER CIRCUITS
EFFINGHAM, IL M.P. QS-138.80
DESIGNED IRC/SWS
DIGITIZED IRC/SWS
CHECKED IRC/DBA
DATE 04-30-12
DESIGN DATE 04-30-12
REV. NO. 1
DRAWING -----
SHEET NO -----
FILE QS13880
SHEET C05

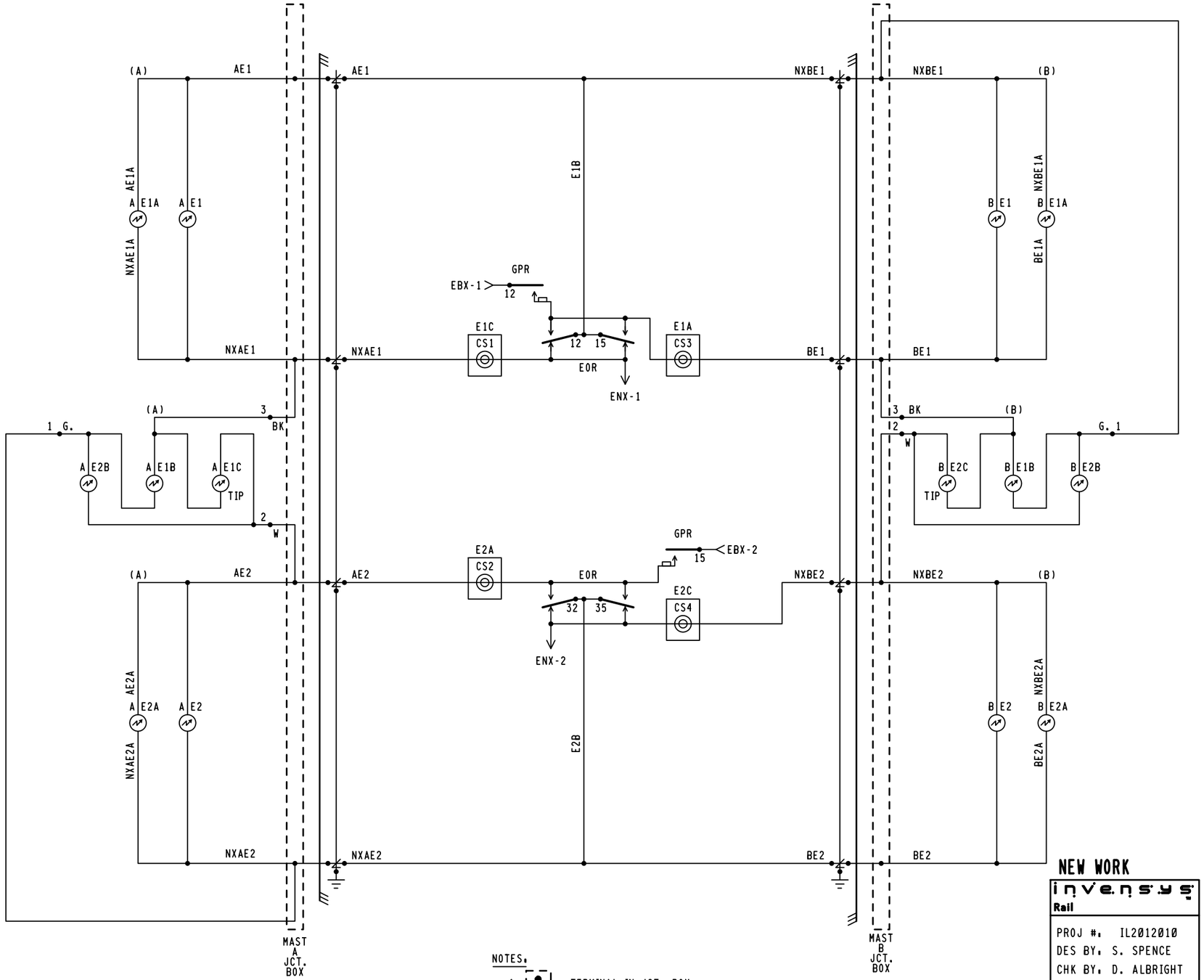

NOTES.

1. = TERMINAL IN JCT. BOX
2. WHEN 7 OR MORE LIGHTS ON A SINGLE STRUCTURE REFER TO SS-382 FOR REQUIRED ARRESTER RATING.

NEW WORK

invensys Rail

PROJ #. IL2012010
DES BY. S. SPENCE
CHK BY. D. ALBRIGHT
DATE. 04-30-12

CSX TRANSPORTATION
RAIL TRANSPORT GROUP ENGINEERING
COMMUNICATIONS AND SIGNALS

T.R. 232 (1550TH ST.) 546437T

CROSSING WARNING DEVICE LIGHT CIRCUITRY
EFFINGHAM, IL M.P. QS-138.80

PMD3RCPML.C04
REV. 09-30-10

DESIGNED	DIGITIZED	CHECKED	DATE
IRC/SWS	IRC/SWS	IRC/DBA	04-30-12

DESIGN DATE	REV. NO.	DRAWING	SHEET NO	FILE	SHEET
04-30-12	1	-----	-----	QS13880	C04

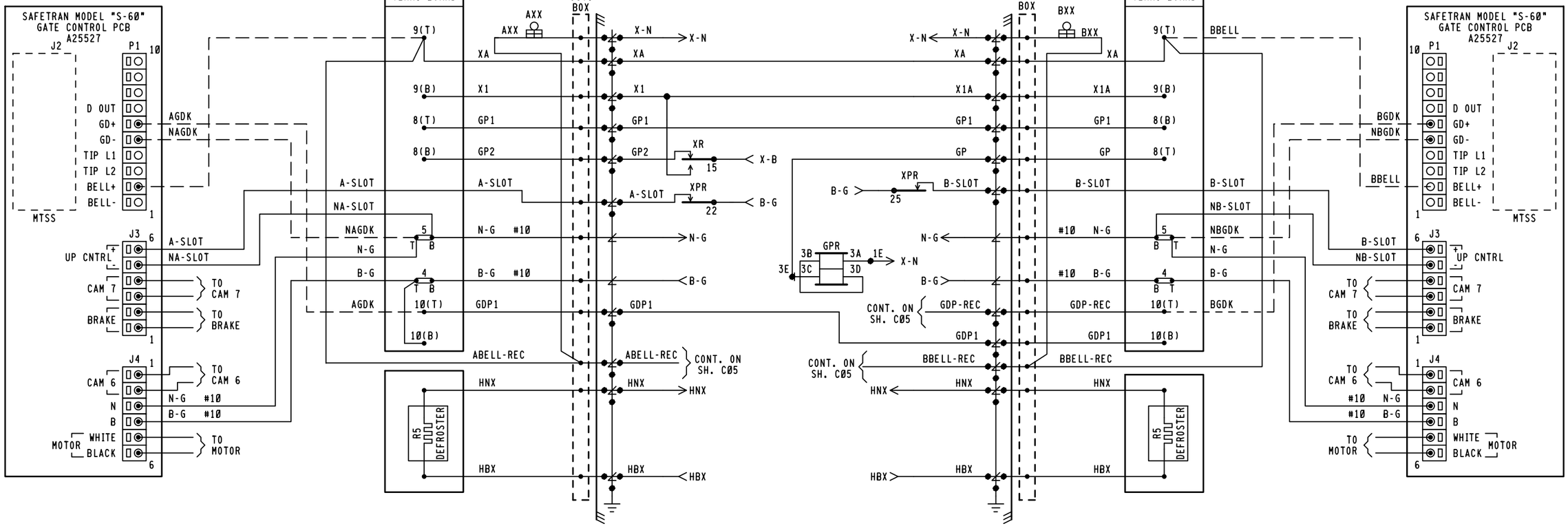

NOTES:

1. = TERMINAL IN JCT. BOX BASE
2. ALL WIRING #16 UNLESS NOTED OTHERWISE.
3. — — · = INTERNAL GATE WIRING NOT USED

NEW WORK

invensys Rail

PROJ #: IL2012010
DES BY: S. SPENCE
CHK BY: D. ALBRIGHT
DATE: 04-30-12

CSX TRANSPORTATION
RAIL TRANSPORT GROUP ENGINEERING
COMMUNICATIONS AND SIGNALS

T.R. 232 (1550TH ST.) 546437T

CROSSING WARNING DEVICE GATE CIRCUITRY
EFFINGHAM, IL M.P. QS-138.80

PMD3RCPML.C03
REV. 09-30-10

DESIGNED	DIGITIZED	CHECKED	DATE
IRC/SWS	IRC/SWS	IRC/DBA	04-30-12

DESIGN DATE	REV. NO.	DRAWING	SHEET NO	FILE	SHEET
04-30-12	1	-----	-----	QS13880	C03

80CWU

HXP-3R2 APPLICATION DESIGN CARD

OPTION 90 (CABINET #)	CABINET #

PASSWORD(_ _✳_ _)(SEE MANUAL 100052-001 AA0 1-27	TRACK 1	TRACK 2	DEFAULT
APPROACH LENGTH ADJUSTMENT	3300'	3300'	9,999 FT.
WARNING TIME ADJUSTMENT	31 SEC.	31 SEC.	99 SEC.
LUMPED IMPEDANCE ADJUSTMENT (LIA)	✳	✳	0
TRANSMITTER CHECK ADJUSTMENT (TC)	✳	✳	0
MOTION DETECT RESTART (MD RESTART)	0 ☆	0 ☆	99%
OPTION 1 TRACK ENABLE (TK-ENA)	UP	UP	UP (ALWAYS ENABLED)
OPTION 2 TRACK FREQUENCY (TK F0)	STRAP ◇	STRAP ◇	0 HZ
OPTION 3 CONSTANT WARNING/MOTION (CW/MD)	C	C	d (Motion)
OPTION 4 UNI/BIDIRECTIONAL (UNI-BI)	b	b	b (bi)
OPTION 5 NARROW BAND COMPENSATION (NBS-C)	⊗	⊗	9,999 FT.
OPTION 6 CWE WARNING TIME (CWEWT)	80 SEC.	80 SEC.	80 SEC.
OPTION 7 LOSS OF SHUNT TIME (LOS)	16 SEC.	16 SEC.	16 SEC.
OPTION 8 LOS W/JOINTS NEAR ISLAND (IJ-LOS)	5 SEC. ✳✳	5 SEC. ✳✳	5 SEC.
OPTION 9 BALLAST COMPENSATION (BC)	✳	✳	FREQUENCY DEPENDANT ◎
OPTION 10 PHASE COMPENSATION ADJUSTMENT (P-COMP)	~~✳✳✳~~	~~✳✳✳~~	0°

	AX OPTIONS △	OPTION 11 AX DRIVE #1	OPTION 12 AX DRIVE #2	OPTION 13 AX DRIVE #3	DEFAULT
ITEM 1	TRACK ASSIGNMENT (TK-ASN)	N/A	N/A	N/A	1
ITEM 2	OFFSET DISTANCE TRACK 1 (OF-TK1)	0000'	0000'	0000'	0 FT.
ITEM 3	OFFSET DISTANCE TRACK 2 (OF-TK2)	N/A	N/A	N/A	N/A
ITEM 4	WARNING TIME (WT)	99 SEC.	99 SEC.	99 SEC.	99 SEC.
ITEM 5	MOTION DETECT RESTART (MD-RST)	99 %	99 %	99 %	99 %
ITEM 6	CONSTANT WARNING/MOTION (CW/MD)	d	d	d	d (Motion)
ITEM 7	CLEAR JOINTS LOS (CJ-LOS)	00 SEC.	00 SEC.	00 SEC.	0 SEC.
ITEM 8	POST JOINT DETECTION (PJ-DET)	15 SEC.	15 SEC.	15 SEC.	15 SEC.
ITEM 9	POST JOINT RX (PJ-RX)	15	15	15	15
ITEM 10	POSITIVE START	dn	dn	dn	dn
OPTION 17 MDR DRIVE OR AX RELAY DRIVE SELECTION (MDR-AX)			◎	N/A	dn (STATUS ONLY) ◎

	OPTION 17 SUB-MENU	TRACK 1	TRACK 2	DEFAULT
ITEM 1	MDR-AX OFFSET DISTANCE TRK. 1(OF-TK1) & TRK. 2(OF-TK2)	0000'	0000'	0 FT.= CONFIGURED AS MDR
ITEM 2	MDR-AX CLEAR JOINT LOS TIME (CJ-LOS)	00 SEC.	00 SEC.	0 SEC.
ITEM 3	MDR-AX POST JOINT DETECTION TIME (PJ-DET)	15 SEC.	15 SEC.	15 SEC.
ITEM 4	POST JOINT RX (PJ-RX)	15	15	15 (0 = DISABLE)
OPTION 18 MOTION DETECTOR TIMER (MD-TMR)		10 MIN.	10 MIN.	10 MIN. (0 = DISABLE)
OPTION 19 MINIMUM WARNING TIME WITH ADVANCED PREEMPTION (MIN-WT)		00 SEC.	00 SEC.	00 SEC. (0 = DISABLE)
	OPTION 20 FALSE SHUNT TIMER ADJUSTMENT (FS-TMR)			
ITEM 1	FALSE SHUNT RX (FS-RX)	0	0	0, 0 = DISABLE
ITEM 2	FALSE SHUNT TIMER ADJUSTMENT (FS-TM)	10	10	10
	OPTION 21 POSITIVE START RX & TIMER ADJUSTMENT (POS-ST)			
ITEM 1	POSITIVE START RX (POS-RX)	0	0	0, 0 = DISABLE
ITEM 2	POSITIVE START TIMER (POS-TM)	10	10	10
	OPTION 22 APPROACH RELEASE RX (AR-TM)			
ITEM 1	APPROACH RELEASE RX (AR-RX)	0	0	0, 0 = DISABLE
ITEM 2	APPROACH RELEASE TIMER (AR-TM)	10	10	10
OPTION 47 AUTO RX ADJUSTMENT (ATO-RX)		dn	dn	dn = DISABLE
OPTION 48 PREDICTIVE FILTER ENABLE/DISABLE (PF-ENA)		UP	UP	UP = ENABLE
OPTION 49 RESET LOCAL PARAMETERS TO DEFAULT SETTINGS (RESET)				PAGE 3-14 & 3-41
OPTION 50 RECORDER PRINTER CONTROL (PRNTR)		✥		PAGE 1-47 & 3-41
OPTION 51 CLOCK ADJUSTMENT (CLOCK)		⊕		PAGE 3-32
	OPTION 70 LOCAL SERIAL I/O PORT ADJUSTMENT (LSP)			
ITEM 1	BAUD RATE	38.4	✥	PAGE 1-47 & 3-42
ITEM 2	DBITS (DATA BITS)	8	✥	PAGE 1-47 & 3-42
ITEM 3	PA (PARITY)	NO(-=NO PARITY)	✥	PAGE 1-47 & 3-42
OPTION 90 CABINET NUMBER DISPLAY (CAB)		✳		PAGE 1-47 & 3-41
OPTION 91 HXP-3 OPERATING PROGRAM VERSION NUMBER (VERS)		✳		VERSION 35.0
OPTION 99 RESET PASSWORD TIMER (TIMER)		✥		PAGE 3-30

NOTE:

✳ = ENTRY TO BE DONE ON AS-IN-SERVICE.

☆ = NORMALLY SET AT "0" SEE MANUAL 100052-001 AA0 PG. 1-46 & 3-41.

◇ = THE WORD STRAP IS DISPLAYED WHEN FREQUENCY SELECT DIP SWITCHES USED TO SELECT A STANDARD FREQUENCY.

⊗ = ADJUSTMENT NECESSARY ONLY WHEN AX RELAY DRIVE MODULE USED.

✳✳ = ADJUSTMENT NECESSARY IF INSULATED JOINTS ARE LOCATED NEAR ISLAND CIRCUIT.

~~✳✳✳~~ = ADJUSTMENT NECESSARY ONLY IF VERY POOR BALLAST CONDITIONS NEED TO BE COMPENSATED.

◎ = OPTION 17 SUB-MENU USED ONLY WHEN AX RELAY DRIVE OPERATION IS SELECTED. ENTERING AN OFFSET DISTANCE VALUE OTHER THAN ZERO ASSIGNS A MDR AS AN AX DRIVE.

△ 1. WHEN AXD MODULES ARE NOT INSTALLED, THEIR ASSOCIATED OPTIONS AND ADJUSTMENTS ARE NOT DISPLAYED.
2. PROGRAM UNUSED AX OPTION(S) SAME AS OPTION 11. IF AX OPTION 12 OR 13 IS USED IN FUTURE THEN REPROGRAM AS APPLICABLE.

⊕ = FREQUENCY DEPENDANT, RANGE BETWEEN 50-250 TO BE SUPPLIED ON AS-IN-SERVICE.

✥ = OPTIONS 50-99 ARE NON-VITAL AND NOT REQUIRED FOR INITIAL SETUP. SEE MANUAL 100052-001 AA0. FOR OPTIONS 49 TO 99 SEE PAGES AS LISTED IN DEFAULT COLUMN.

⊕ = SET CORRECT LOCAL TIME AND DATE. TIME OF DAY SHOULD BE SYNCRONIZED WITH TIME SHOWN BY EXTERNAL EVENT RECORDER.

NEW WORK

invensys Rail

PROJ #: IL2012010
DES BY: S. SPENCE
CHK BY: D. ALBRIGHT
DATE: 04-30-12

CSX TRANSPORTATION
RAIL TRANSPORT GROUP ENGINEERING
COMMUNICATIONS AND SIGNALS

T.R. 232 (1550TH ST.) 546437T

DETECTION DEVICE PROGRAM
EFFINGHAM, IL M.P. QS-138.80

PMD3RCPML.C02
REV. 01-08-10

DESIGNED	DIGITIZED	CHECKED	DATE
IRC/SWS	IRC/SWS	IRC/DBA	04-30-12

DESIGN DATE	REV. NO.	DRAWING	SHEET NO	FILE	SHEET
04-30-12	1	-----	-----	QS13880	C02

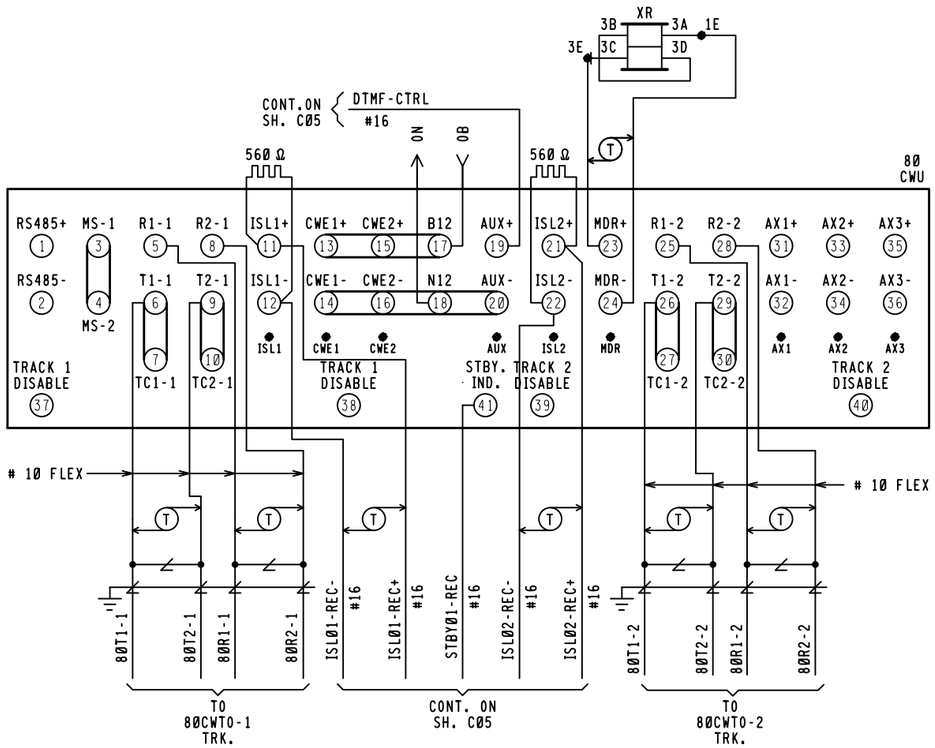

80CWU
HXP-3R2 MODULES REQUIRED

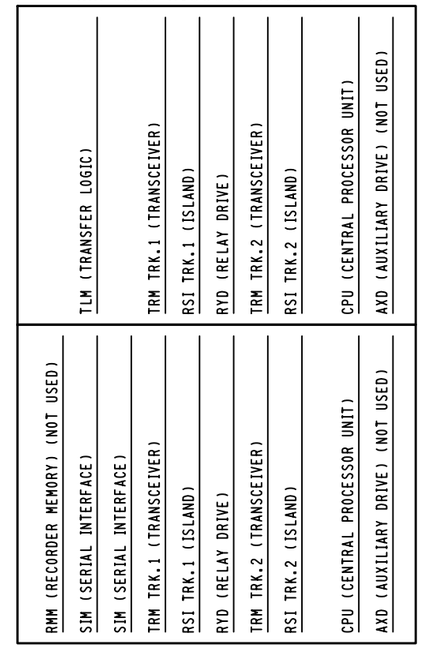

FRONT VIEW

STANDBY SYSTEM

CABINET SWITCHES

MASTER/SLAVE SWITCHES ARE LOCATED IN THE UPPER BAY OF CABINET

MASTER/SLAVE

MASTER SLAVE — S1 — TRACK 1

MASTER SLAVE — S2 — TRACK 2

THESE SWITCHES ARE LOCATED ON MOTHERBOARD

SYSTEM CONFIGURATION				
S5 & S6 DIP SWITCH POSITIONS				
SWITCH #	1	2	3	4
SWITCH POSITION	ON	OFF	OFF	OFF
APPROACH.	NORMAL		(NOT USED)	

	FREQUENCY SELECT					
TRACK 1	S3 & S4 DIP SWITCH POSITIONS					114 HZ
	SWITCH #	1	2	3	4	5
	SWITCH POSITION	OFF	ON	OFF	OFF	OFF
TRACK 2	S7 & S8 DIP SWITCH POSITIONS					114 HZ
	SWITCH #	1	2	3	4	5
	SWITCH POSITION	OFF	ON	OFF	OFF	OFF

RSI MODULE
226736-000 8.0KHZ

ISLAND FREQ.
8.0KHZ

TRACK 1 STANDBY RSI JUMPERS

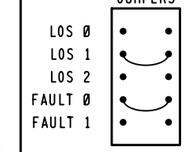

TRACK 2 STANDBY RSI JUMPERS

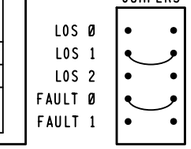

NORMAL SYSTEM

CABINET SWITCHES

MASTER/SLAVE SWITCHES ARE LOCATED IN THE UPPER BAY OF CABINET

THESE SWITCHES ARE LOCATED ON MOTHERBOARD

SYSTEM CONFIGURATION				
S13 & S14 DIP SWITCH POSITIONS				
SWITCH #	1	2	3	4
SWITCH POSITION	ON	OFF	OFF	OFF
APPROACH.	NORMAL		(NOT USED)	

	FREQUENCY SELECT					
TRACK 1	S11 & S12 DIP SWITCH POSITIONS					114 HZ
	SWITCH #	1	2	3	4	5
	SWITCH POSITION	OFF	ON	OFF	OFF	OFF
TRACK 2	S15 & S16 DIP SWITCH POSITIONS					114 HZ
	SWITCH #	1	2	3	4	5
	SWITCH POSITION	OFF	ON	OFF	OFF	OFF

RSI MODULE
226736-000 8.0KHZ

ISLAND FREQ.
8.0KHZ

TRACK 1 NORMAL RSI JUMPERS

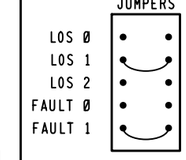

TRACK 2 NORMAL RSI JUMPERS

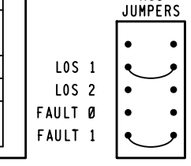

TLM MODULE
JUMPERS AND SWITCHES

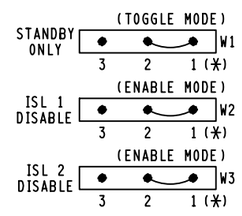

NOTE.
PIN 1 IS IDENTIFIED BY ASTERICK BELOW IT.
(☆)= MAY BE SET PER FIELD CONDITIONS.

MINUTE TIMEOUT SWITCH

SETTING	(☆) 9 MINUTES

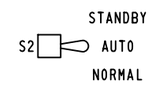

NEW WORK

invensys Rail

PROJ #. IL2012010
DES BY. S. SPENCE
CHK BY. D. ALBRIGHT
DATE.04-30-12

CSX TRANSPORTATION
RAIL TRANSPORT GROUP ENGINEERING
COMMUNICATIONS AND SIGNALS

T.R. 232 (1550TH ST.) 546437T

CROSSING DETECTION CIRCUITRY
EFFINGHAM, IL M.P. QS-138.80

PMD3RCPML.C01
REV. 12-17-10

DESIGNED	DIGITIZED	CHECKED	DATE
IRC/SWS	IRC/SWS	IRC/DBA	04-30-12

DESIGN DATE	REV. NO.	DRAWING	SHEET NO	FILE	SHEET
04-30-12	1	-----	-----	QS13880	C01

TOP ROW

XR			XPR			GPR			EOR			POR		
12	FB	B8	22	F	B36	12	B	B82	12	FB	B81	12	FB	B62
15	FB	C30	25	F	C30	15	B	C30	15	FB	C30	15	FB	C30
22						22			32	FB		22	FB	
23						25			35	FB		25	FB	
25	F					32	F					32	F	
32						35	B					35		
35														

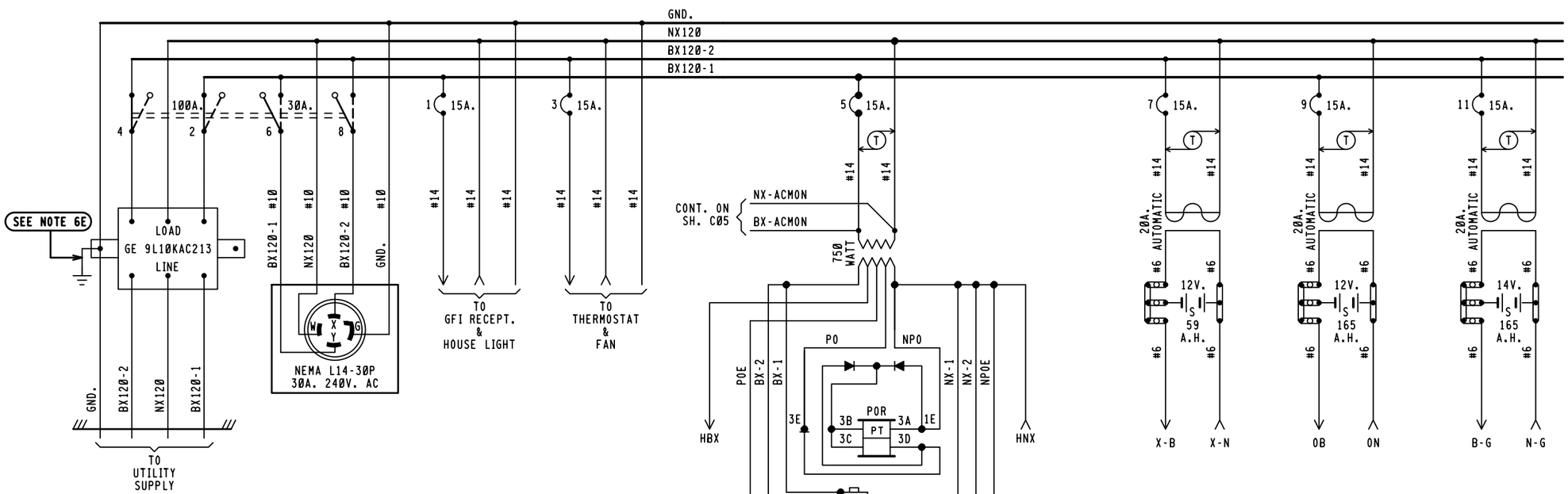

BX120-1	BX120-2
14.25 AMPS	14.0 AMPS

MAXIMUM LOAD
CALCULATED PER SS360

NOTES:

1 - REFERENCES ARE PER SCMS-13.
2 - ARRESTERS ARE PER SS382.
3 - SHELF RELAY PLACEMENT ON CONSIST CHART HAS NO SIGNIFICANCE.
4 - PLUG-IN RELAYS ARE VIEWED FROM THE FRONT OF RACK.
5 - BATTERY A.H. CAPACITY SHOWN IS THE MINIMUM REQUIREMENT.
6 - WIRING
  A - FEED TO ALL BUSSES, LIGHT CIRCUITS,MOTOR CIRCUITS TO BE #10 FLEX.
  B - 120-VOLT FEED FROM ENTRANCE TO POWER BUSS TO BE #10 FLEX.
  C - ALL TRACK WIRES TO BE #10 FLEX.
  D - ALL OTHERS TO BE #16 FLEX UNLESS NOTED.
  E - GROUND WIRE NOT NECESSARY WHEN GE ARRESTER IS MOUNTED ON GROUND PLANE OR METAL ENCLOSURE AFFIXED DIRECTLY TO BUNGALOW METALLIC STRUCTURAL MEMBER.
7 - CIRCUIT INTERRUPTERS 2 & 4 ARE MECHANICALLY INTERLOCKED WITH CIRCUIT INTERRUPTERS 6 & 8.

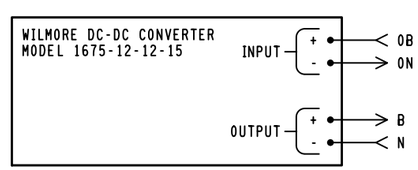

NEW WORK

invensys Rail

PROJ #: IL2012010
DES BY: S. SPENCE
CHK BY: D. ALBRIGHT
DATE: 04-30-12

= NOTE

PMD3RCPML.E01H
REV. 09-30-10

6'X 6' RELAY HOUSE W/FARADAY SHIELD

CSX TRANSPORTATION
RAIL TRANSPORT GROUP ENGINEERING
COMMUNICATIONS AND SIGNALS

T.R. 232 (1550TH ST.) 546437T

POWER DISTRIBUTION
EFFINGHAM, IL M.P. QS-138.80

DESIGNED	DIGITIZED	CHECKED	DATE
IRC/SWS	IRC/SWS	IRC/DBA	04-30-12

DESIGN DATE	REV. NO.	DRAWING	SHEET NO	FILE	SHEET
04-30-12	1	-----	-----	QS13880	E01

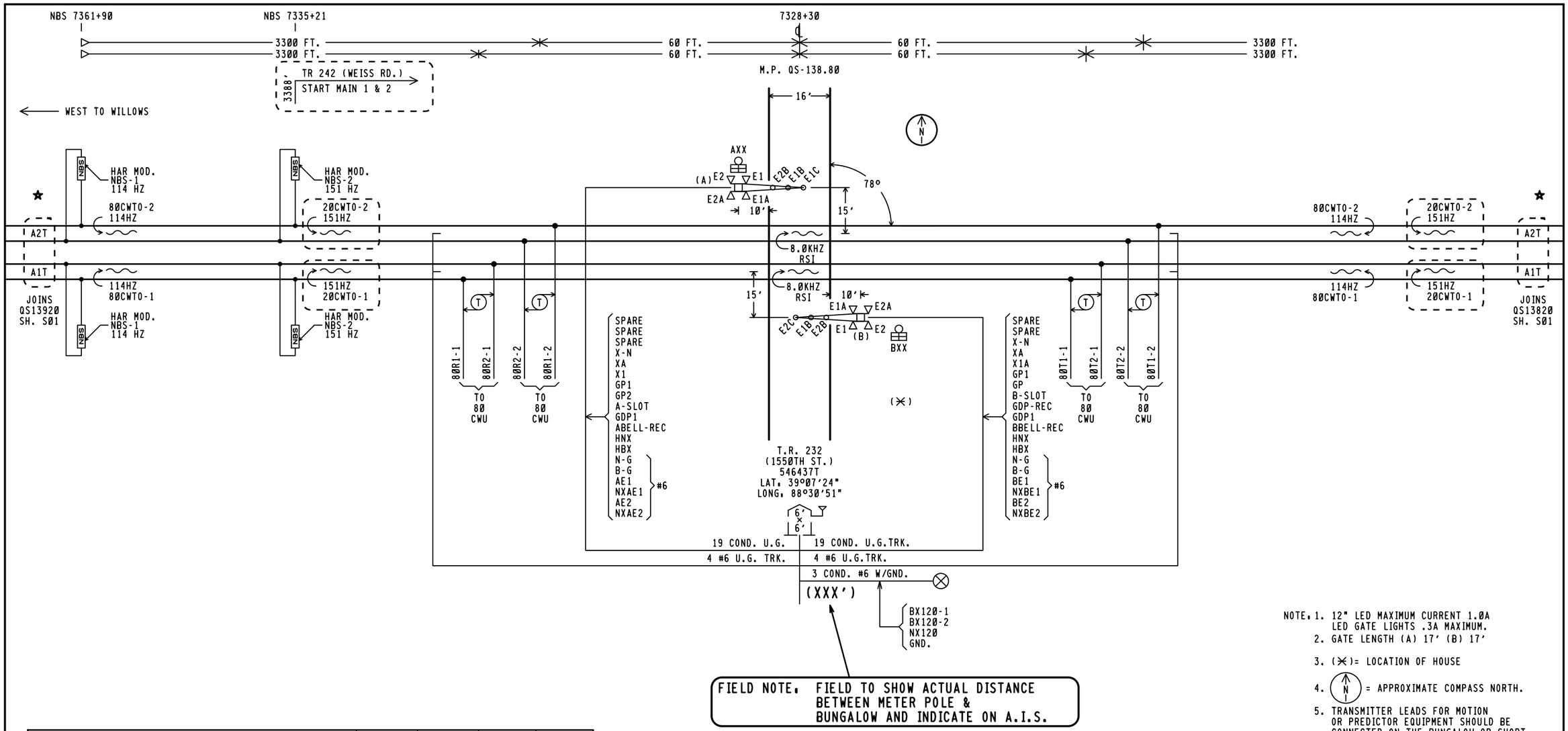

FIELD NOTE. FIELD TO SHOW ACTUAL DISTANCE BETWEEN METER POLE & BUNGALOW AND INDICATE ON A.I.S.

APPROACH LENGTHS TABLE DC, AFO, TYPE C, MOTION, CWT, OR OTHER	WESTWARD MAIN 1 CWT	EASTWARD MAIN 1 CWT	WESTWARD MAIN 2 CWT	EASTWARD MAIN 2 CWT
EXISTING STANDARD MINIMUM WARNING TIME IN SECONDS	25	25	25	25
ROADWAY GATE TIME IN SECONDS	5	5	5	5
CLEARANCE TIME IN SECONDS	1	1	1	1
DOT TRAFFIC LIGHT SIMULTANEOUS PREEMPT TIME IN SECONDS✳	0	0	0	0
DESIGNED WARNING TIME FOR TRAINS AT TIME TABLE SPEED	31 SEC.	31 SEC.	31 SEC.	31 SEC.
DOT TRAFFIC LIGHT ADVANCE PREEMPT TIME IN SECONDS ✳	0	0	0	0
CONTROL EQUIPMENT DECISION TIME IN SECONDS	4	4	4	4
DESIGNED DETECTION TIME FOR TRAINS AT TIME TABLE SPEED	35 SEC.	35 SEC.	35 SEC.	35 SEC.
TIME TABLE MAXIMUM TRAIN SPEED IN MILES PER HOUR	60	60	60	60
BUFFER SPEED IN MILES PER HOUR	5	5	5	5
TOTAL WARNING SYSTEM DESIGN SPEED IN MILES PER HOUR	65	65	65	65
APPROACH DISTANCE TO ISLAND EDGE IN FEET	3300	3300	3300	3300
HALF WIDTH OF ISLAND IN FEET	60	60	60	60
APPROXIMATE MILE POSTS FOR APPROACH CIRCUIT	139.44	138.16	139.44	138.16

✳AUTHORIZING AGENCY. NONE
✳DATE OF REQUIREMENT. NONE
✳AMOUNT OF TIME (SEC.). NONE

NOTE. ★ SIGNAL TRACK CIRCUITS SHOWN ON EXISTING AJOINING SHEETS DO NOT MATCH. FIELD TO VERIFY CIRCUIT NOMENCLATURE FOR THE RIGHT TRACK ON QS13920.S01 AND THE LEFT TRACK CIRCUIT ON 8406-1378 SH. 1

FIELD & MATERIAL NOTE. ADD HARMON TF-114HZ FILTERS ON POSITIVE OF C1 & C2 TRACKS AT 1351 & 1352 SIGNALS DWG. 8406-1354 SHS. 3 & 4 MARKUP AND RETURN ON A.I.S.

NOTE. 1. 12" LED MAXIMUM CURRENT 1.0A LED GATE LIGHTS .3A MAXIMUM.
2. GATE LENGTH (A) 17' (B) 17'
3. (✳)= LOCATION OF HOUSE
4. (N) = APPROXIMATE COMPASS NORTH.
5. TRANSMITTER LEADS FOR MOTION OR PREDICTOR EQUIPMENT SHOULD BE CONNECTED ON THE BUNGALOW OR SHORT LEAD SIDE OF THE CROSSING.
6. ISLAND TRACK LEADS SHOULD BE CONNECTED 50 FEET FROM ROAD EDGE BUT ON NARROW ROADS (20' OR LESS) ISLAND LENGTH SHALL BE 120 FEET.
7. WARNING SYSTEM APPROACH CIRCUIT DISTANCES ARE TO BE MEASURED FROM THE ISLAND TRACK CONNECTIONS.

NEW WORK

invensys Rail

PROJ #. IL2012010
DES BY. S. SPENCE
CHK BY. D. ALBRIGHT
DATE. 04-30-12

(_ _) = EXISTING
( ) = NOTE

CSX TRANSPORTATION
RAIL TRANSPORT GROUP ENGINEERING
COMMUNICATIONS AND SIGNALS

T.R. 232 (1550TH ST.) 546437T

TRACK AND SIGNAL PLAN
EFFINGHAM, IL M.P. QS-138.80

DESIGNED	DIGITIZED	CHECKED	DATE
IRC/SWS	IRC/SWS	IRC/DBA	04-30-12

DESIGN DATE	REV. NO.	DRAWING	SHEET NO	FILE	SHEET
04-30-12	1	-----	-----	QS13880	S01

INDEX

CONTENTS

SH. NO.		REVISION NO. 1	2	3	4	5	6	7	8	9
I01	INDEX AND REVISIONS	╱								
S01	TRACK AND SIGNAL PLAN	╱								
E01	POWER DISTRIBUTION	╱								
C01	CROSSING DETECTION CIRCUITRY	╱								
C02	DETECTION DEVICE PROGRAM	╱								
C03	CROSSING WARNING DEVICE GATE CIRCUITRY	╱								
C04	CROSSING WARNING DEVICE LIGHT CIRCUITRY	╱								
C05	RECORDER AND DTMF CONTROLLER CIRCUITS	╱								
C06	RECORDER PROGRAM	╱								

╱ = DESIGN COMPLETED

╳ = REVISION COMPLETED

REVISIONS

REV. NO.	PROJECT NO.	DESIGN DATE	IN SERVICE DATE	REVISION DATE
1	IL2012010	04-30-12		

TO BE COMPLETED ON A.I.S.

NEW WORK

invensys Rail

PROJ #: IL2012010
DES BY: S. SPENCE
CHK BY: D. ALBRIGHT
DATE: 04-30-12

= NOTE

PMD3RCPML.I01
REV. 09-30-10

CSX TRANSPORTATION
RAIL TRANSPORT GROUP ENGINEERING
COMMUNICATIONS AND SIGNALS

T.R. 232 (1550TH ST.) 546437T

INDEX AND REVISIONS
EFFINGHAM, IL M.P. QS-138.80

DESIGNED	DIGITIZED	CHECKED	DATE
IRC/SWS	IRC/SWS	IRC/DBA	04-30-12

DESIGN DATE	REV. NO.	DRAWING	SHEET NO	FILE	SHEET
04-30-12	1	-----	-----	QS13880	I01