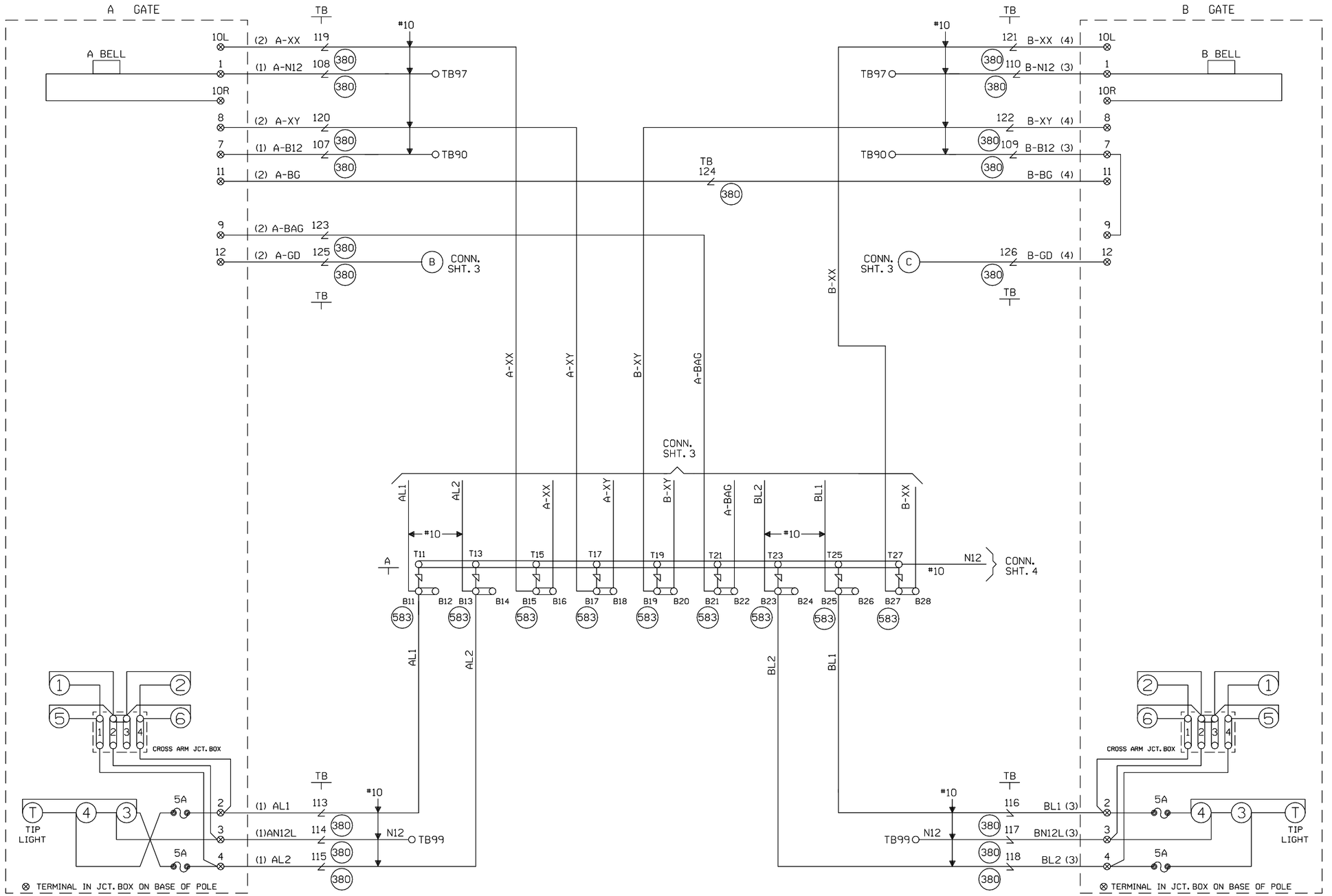

CABLE TABULATION

CABLE NO. 1 5C. NO.6 U.G.B.T. TO GATE A
CABLE NO. 2 7C. NO.14 U.G.B.T. TO GATE A
CABLE NO. 3 5C. NO.6 U.G.B.T. TO GATE B
CABLE NO. 4 7C. NO.14 U.G.B.T. TO GATE B

NEW SHEET

Designed: 12/22/11
INSTALL FLS/GATES & CONSTANT WARNING AT TR 227 M.P. 256.90
Rec*: WO*: 11998 /JPW
IS: / /CTC/JTB

MODIFICATION LEVEL	
O. A. LAST LEVEL CHECKED	DU
LAST LEVEL MOD THIS TYPICAL	DU
LAST LEVEL BY DESIGNER	DU
CHANGED FROM TYPICAL?	Y

REV 01.24.11 4K GFSLTYP.5

UNION PACIFIC
QUALITY PRODUCTIVITY SAFETY
SIGNAL DESIGN

Date: 12/22/11
Des: CTC
Chk: JPW
AFE: 11998

UNION PACIFIC RAILROAD
SALEM, ILLINOIS
TR 227
MT. VERNON SUBDIVISION
Office of Sr AVP Engineering - Signal/TCO Omaha, Nebraska

Sh.: 5
DOT 167765N
MP: 256.90
ID: 030125690.5X

WCH 3593-E

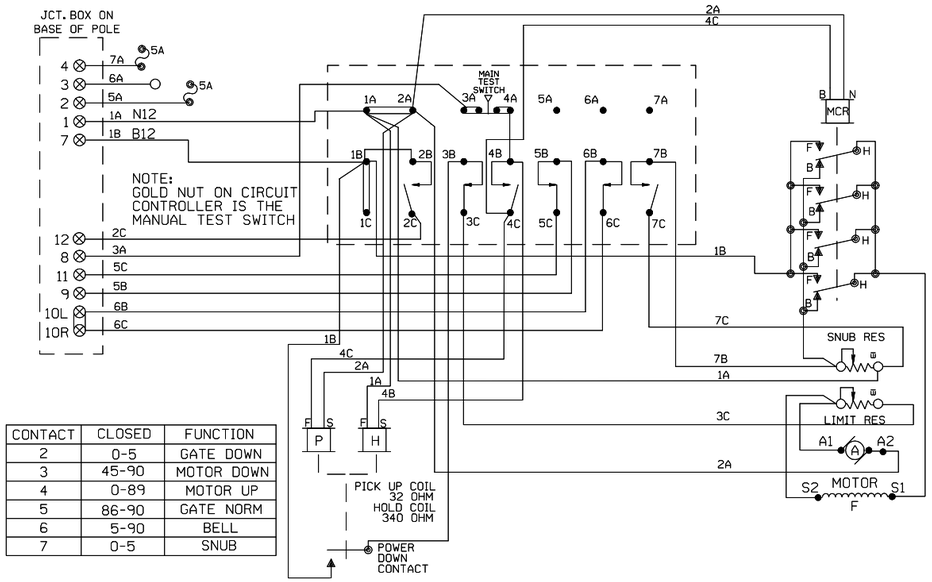

CONTACT	CLOSED	FUNCTION
2	0-5	GATE DOWN
3	45-90	MOTOR DOWN
4	0-89	MOTOR UP
5	86-90	GATE NORM
6	5-90	BELL
7	0-5	SNUB

WCH 3597-E

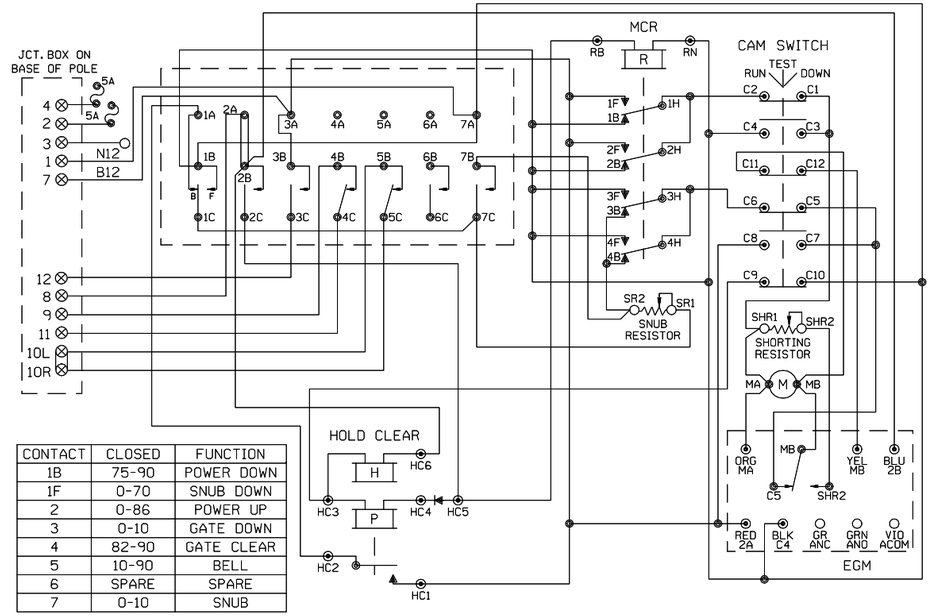

CONTACT	CLOSED	FUNCTION
1B	75-90	POWER DOWN
1F	0-70	SNUB DOWN
2	0-86	POWER UP
3	0-10	GATE DOWN
4	82-90	GATE CLEAR
5	10-90	BELL
6	SPARE	SPARE
7	0-10	SNUB

WCH 3597-RB

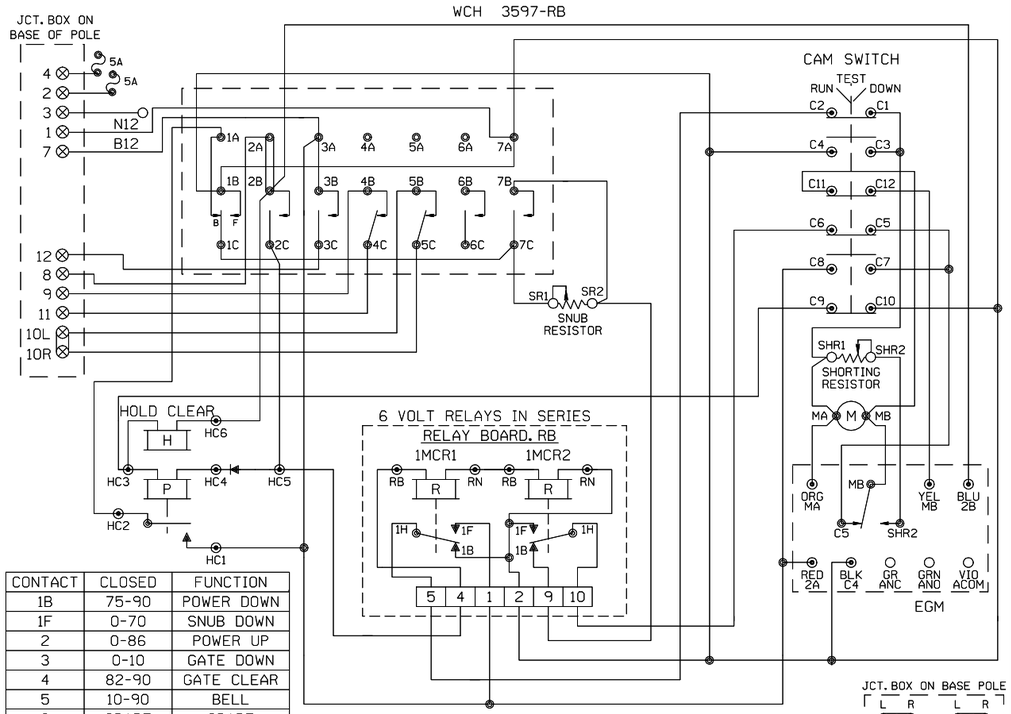

CONTACT	CLOSED	FUNCTION
1B	75-90	POWER DOWN
1F	0-70	SNUB DOWN
2	0-86	POWER UP
3	0-10	GATE DOWN
4	82-90	GATE CLEAR
5	10-90	BELL
6	SPARE	SPARE
7	0-10	SNUB

JCT. BOX ON BASE POLE

L	R	L	R
1		7	
2		8	
3		9	
4		10	
5		11	
6		12	

SHOW TYPE MECH. INSTALLED

ALL MECHANISMS SHOWN IN THE CLEAR POSITION

SAFETRAN S-60

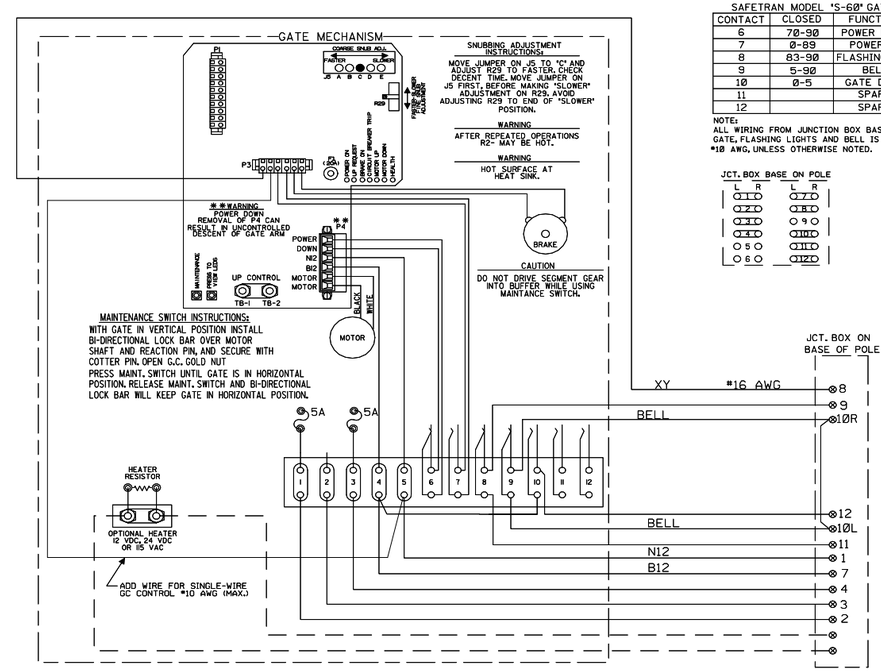

SAFETRAN MODEL 'S-60' GATE

CONTACT	CLOSED	FUNCTION
6	70-90	POWER DOWN
7	0-89	POWER UP
8	83-90	FLASHING LGT.
9	5-90	BELL
10	0-5	GATE DOWN
11		SPARE
12		SPARE

NOTE:
ALL WIRING FROM JUNCTION BOX BASE TO GATE, FLASHING LIGHTS AND BELL IS TO BE #10 AWG, UNLESS OTHERWISE NOTED.

JCT. BOX BASE ON POLE

L	R	L	R
1		7	
2		8	
3		9	
4		10	
5		11	
6		12	

NEW SHEET

Designed: 12/22/11
INSTALL FLS/GATES & CONSTANT WARNING AT TR 227 M.P. 256.90
Rec#: 1St
WO#: 11998 JPW
/ /CTC/JTB

MODIFICATION LEVEL

Q. A. LAST LEVEL CHECKED	DU
LAST LEVEL MOD THIS TYPICAL	DU
LAST LEVEL BY DESIGNER	DU
CHANGED FROM TYPICAL?	N

REV 01. 24. 11 4K GWIRING. 7

UNION PACIFIC
QUALITY PRODUCTIVITY SAFETY
SIGNAL DESIGN

Date: 12/22/11
Des: CTC
Chk: JPW
AFE: 11998

UNION PACIFIC RAILROAD
SALEM, ILLINOIS
TR 227
MT. VERNON SUBDIVISION
Office of Sr AVP Engineering - Signal/TCO Omaha, Nebraska

Sh.: 6
DOT 167765N
MP: 256.90
ID: 030125690.6X

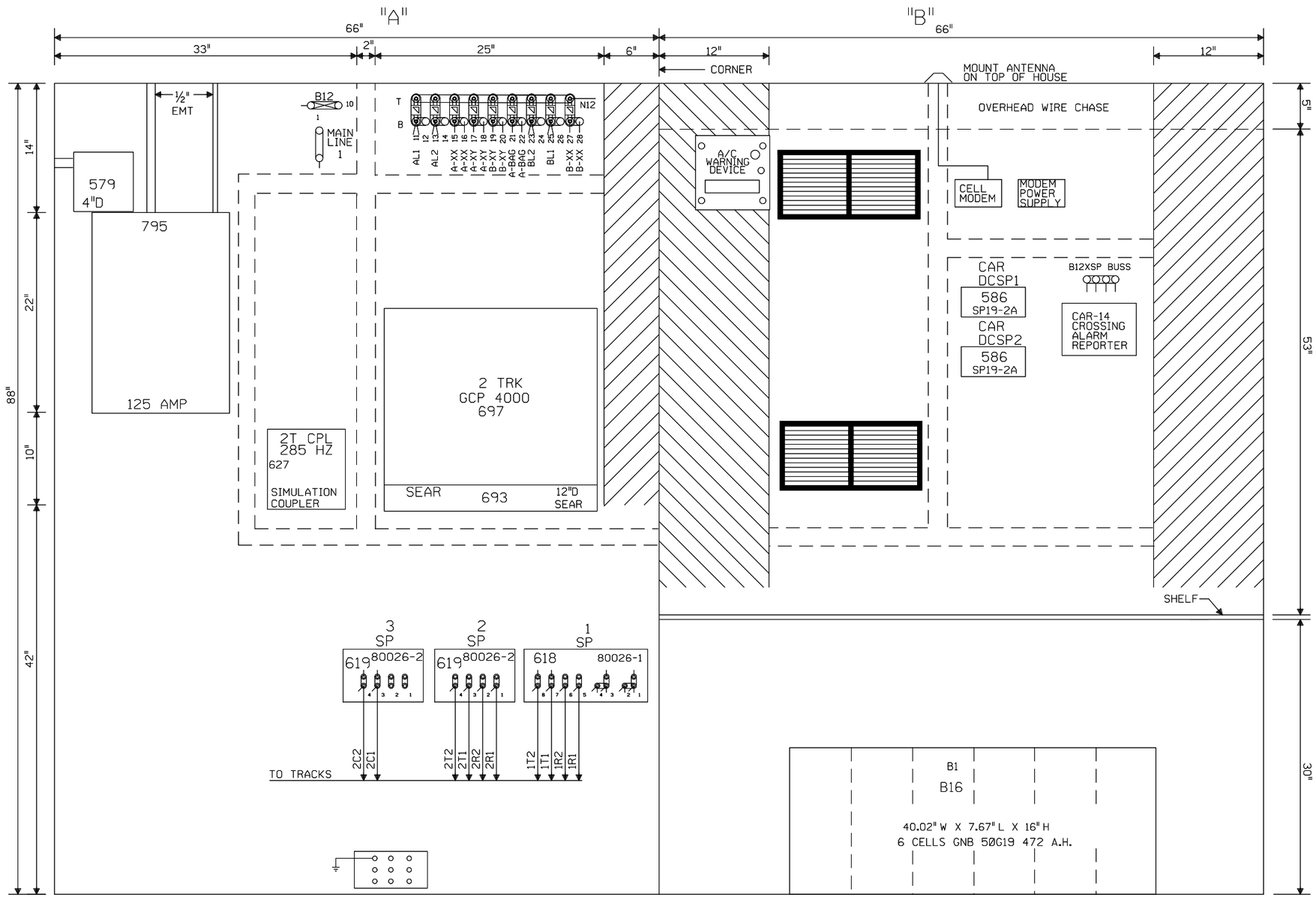

NOTE: ALL DIMENSIONS SHOWN ARE APPROXIMATE.

NEW SHEET

Designed: 12/22/11
INSTALL FLS/GATES & CONSTANT WARNING AT TR 227 M.P. 256.90
Rec*: WO*: 11998 /JPW
IS: / /CTC/JTB

MODIFICATION LEVEL	
Q.A. LAST LEVEL CHECKED	DU
LAST LEVEL MOD THIS TYPICAL	DU
LAST LEVEL BY DESIGNER	DU
CHANGED FROM TYPICAL?	Y

rev 01.24.11 4K 4TKGFC.8

UNION PACIFIC
QUALITY PRODUCTIVITY SAFETY
SIGNAL DESIGN

Date:	12/22/11
Des:	CTC
Chk:	JPW
AFE:	11998

UNION PACIFIC RAILROAD
SALEM, ILLINOIS
TR 227
MT. VERNON SUBDIVISION
Office of Sr AVP Engineering - Signal/TCO Omaha, Nebraska

Sh.:	7
DOT	167765N
MP:	256.90
ID:	030125690.7X

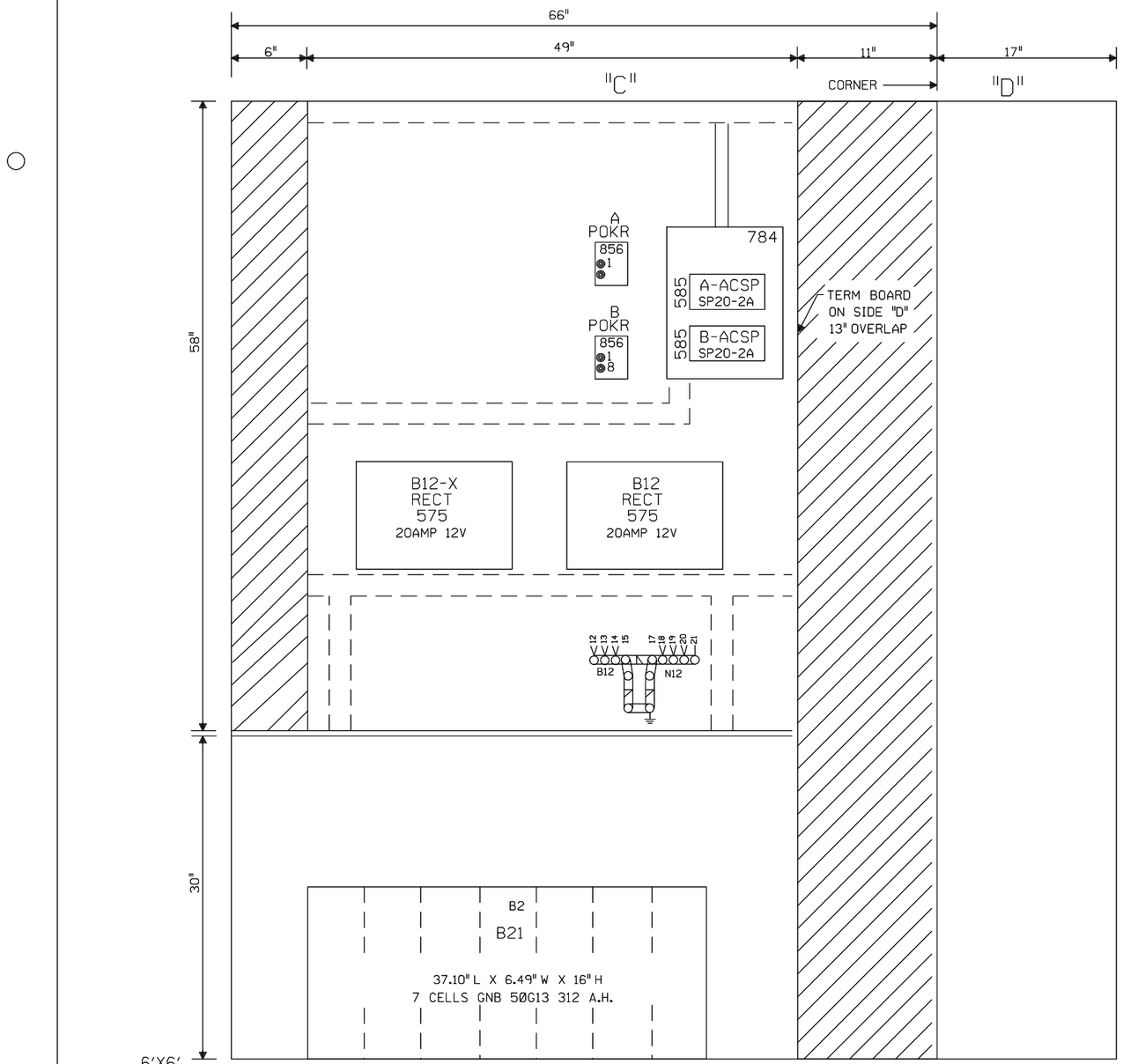

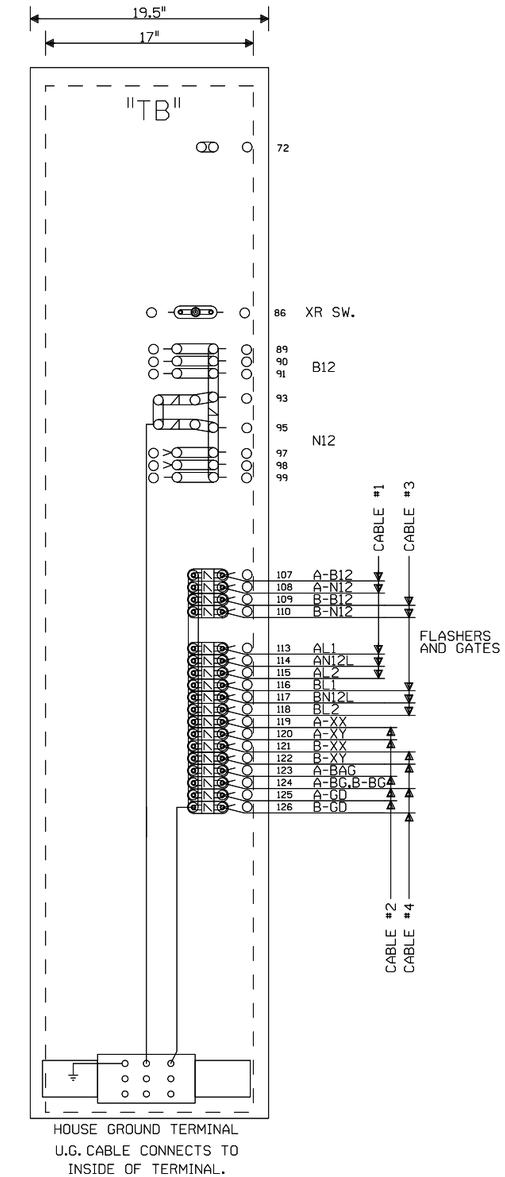

6'X6'
BUNG

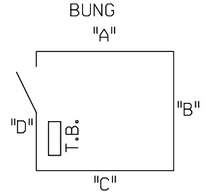

NOTE: ALL DIMENSIONS SHOWN
ARE APPROXIMATE.

NEW SHEET

Designed: 12/22/11
INSTALL FLS/GATES & CONSTANT WARNING AT JR 227 M.P. 256.90
Rec'd: WO#: 11998 /JPW
IS: / /CTC/JTB

MODIFICATION LEVEL	
Q. A. LAST LEVEL CHECKED	DU
LAST LEVEL MOD THIS TYPICAL	DU
LAST LEVEL BY DESIGNER	DU
CHANGED FROM TYPICAL?	Y
Rev 01.24.11 4K GFC.9	

UNION PACIFIC
QUALITY PRODUCTIVITY SAFETY
SIGNAL DESIGN

Date:	12/22/11
Des:	CTC
Chk:	JPW
AFE:	11998

UNION PACIFIC RAILROAD
SALEM, ILLINOIS
TR 227
MT. VERNON SUBDIVISION
Office of Sr AVP Engineering - Signal/TCO Omaha, Nebraska

Sh.:	8
DOT	167765N
MP:	256.90
ID:	030125690.8X

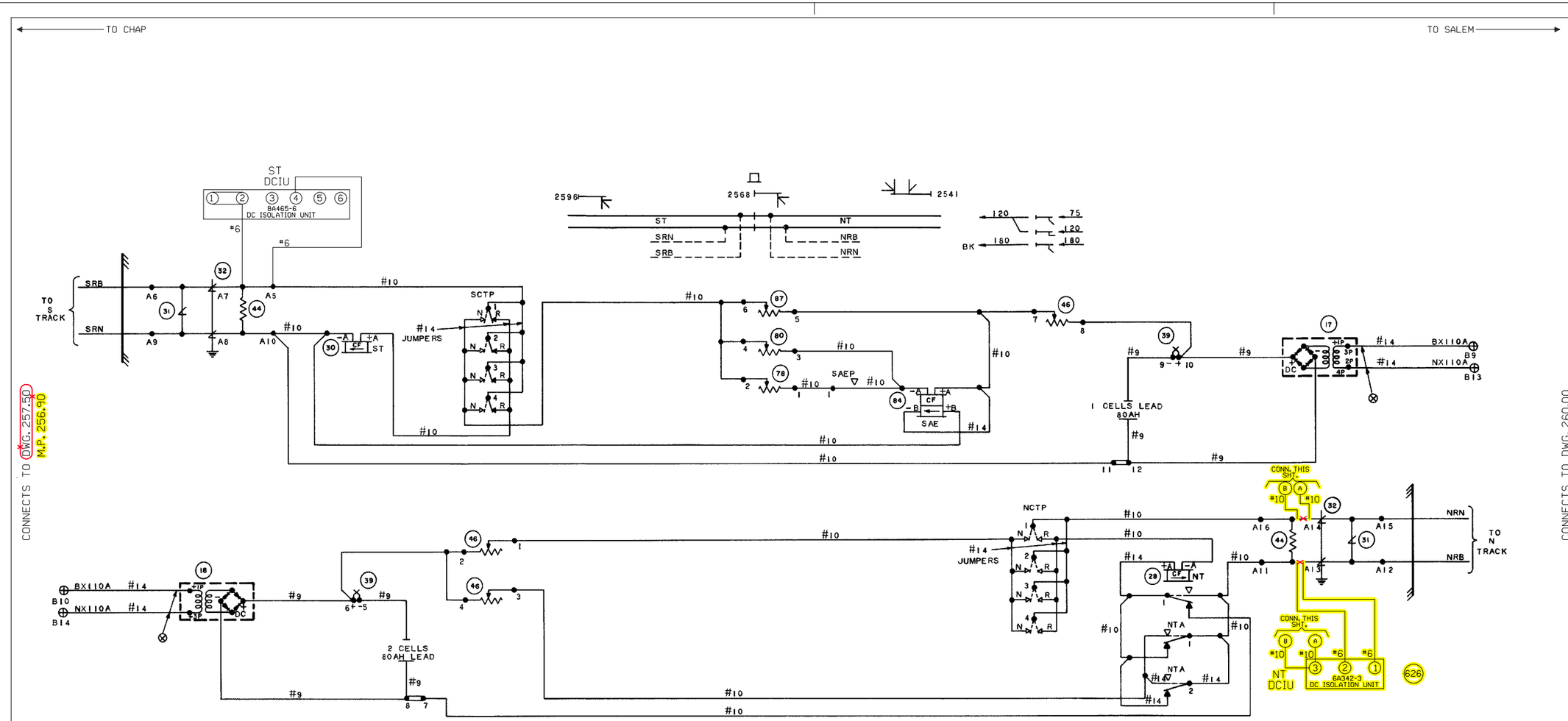

CONSTRUCTION NOTES:

1. INSTALL (1)- DUAL POLARITY DC CODED TRACK ISOLATION UNIT (TAB 626) ON THE NT TRACK AT THIS LOCATION.
2. FIELD TO DIG IN NEW U.G. POWER CABLE FROM M.P. 256.90 TO M.P. 256.80.

NOTE:
- WIRE AS SHOWN
⊗ - TWISTED

S ◄—○—► N

= IN
= OUT
CTC/BKG

Designed: 12/22/11 INSTALL FLS/GATES & CONSTANT WARNING AT TR 227 M.P. 256.90 Req#: WO#: 11998 ISs: JPW / CTC/JTB	Revised: 08-10-2010 INSTALLED FLS/GATES & CONSTANT WARNING AT CHURCH ROAD. M.P. 257.50 Req#: 17111 WO#: 44520 ISs: 07-12-2010 ALT MJD/WIT/CTC/JNM

REDRAWN FROM BAR CODE #156463 ORIGINAL DATE 10/29/1971

UNION PACIFIC
QUALITY PRODUCTIVITY SAFETY
SIGNAL DESIGN

Date: 08-10-2010
Des:
Chk:
AFE:

UNION PACIFIC RAILROAD

ONE TRACK INTERMEDIATE
MT. VERNON SUBDIVISION

Office of Sr AVP Engineering - Signal/TCO Omaha, Nebraska

Sh.: 1
MP: 256.80
ID: 030125680.1S

TIF FILE ATTACHED TIF ID = 030125680.1S.TIF

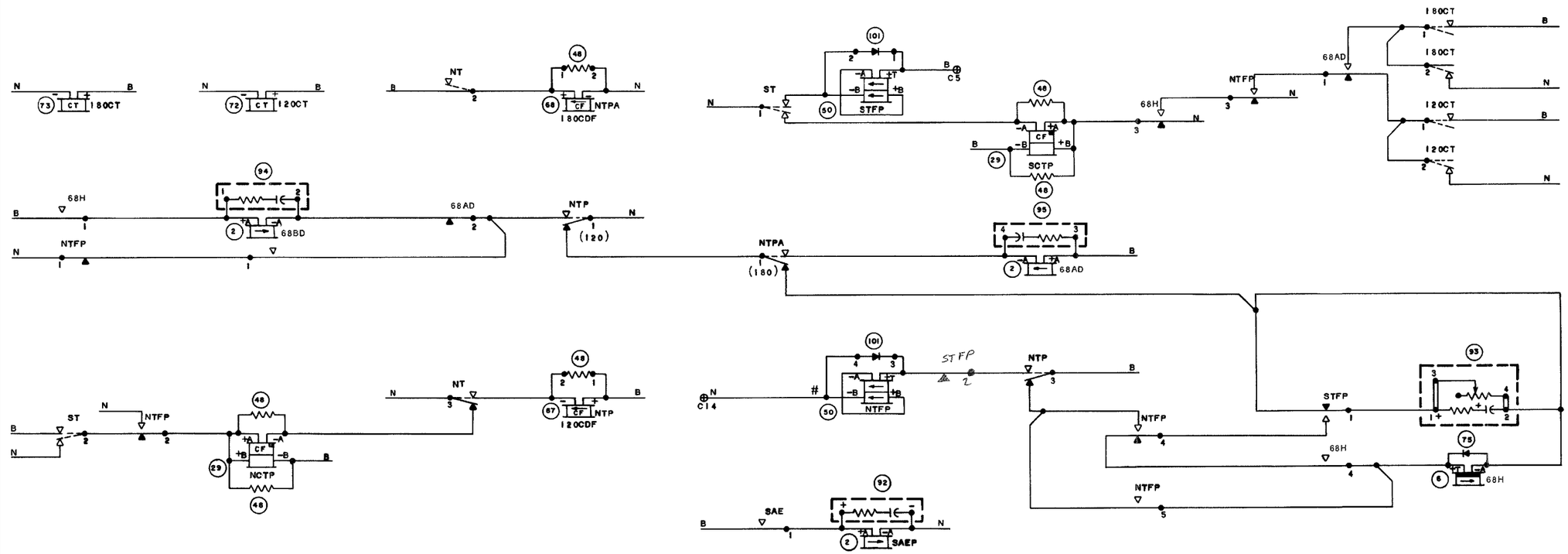

										Revised: 08-10-2010 INSTALLED FLS/GATES & CONSTANT WARNING AT CHURCH ROAD. M.P. 257.50 Req#: 17111 WO#: 44520 IS:07-12-2010 /RLT MJD/WIT/CTC/JNM	REDRAWN FROM BAR CODE #156464 ORIGINAL DATE 10/29/1971	UNION PACIFIC QUALITY PRODUCTIVITY SAFETY SIGNAL DESIGN	Date: 08-10-2010 Des: Chk: AFE:	UNION PACIFIC RAILROAD ONE TRACK INTERMEDIATE MT. VERNON SUBDIVISION Office of Sr AVP Engineering - Signal/TCO Omaha, Nebraska	Sh.: 2 MP: 256.80 ID: 030125680.2S

TIF FILE ATTACHED TIF ID = 030125680.2S.TIF

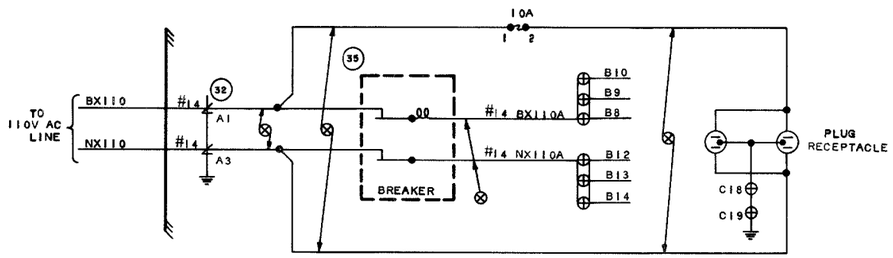

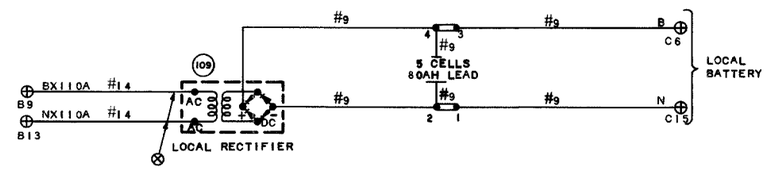

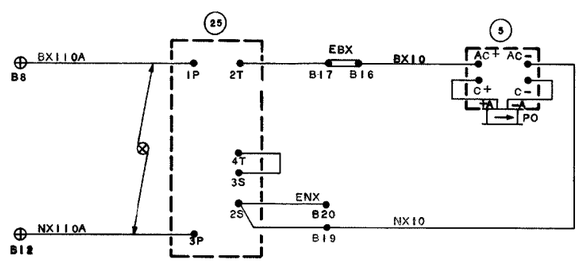

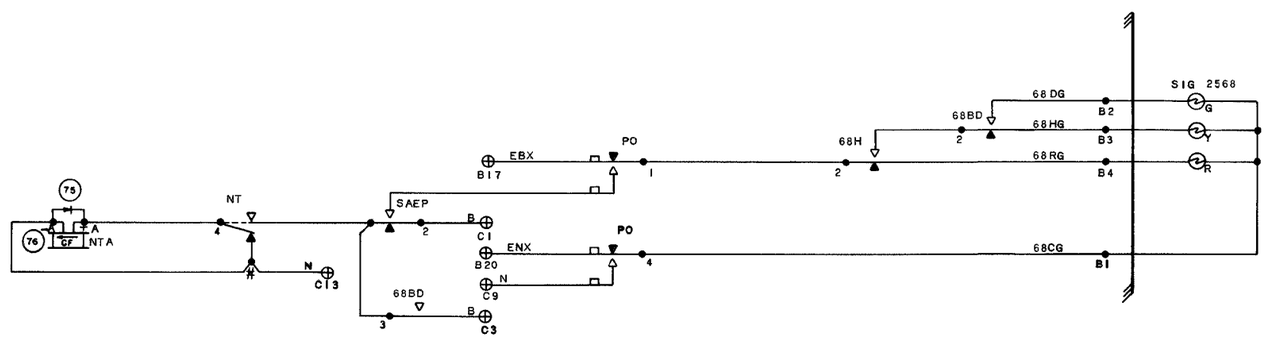

NOTES:

- WIRE AS SHOWN

⊗ - TWISTED

SIGNAL WIRING #14

Revised: 08-10-2010
INSTALLED FLS/GATES & CONSTANT WARNING AT CHURCH ROAD. M.P. 257.50
Req#: 17111 WO#: 44520 ISD07-12-2010 ALT MJD/WIT/CTC/JNM

REDRAWN FROM BAR CODE #156465 ORIGINAL DATE 10/29/1971

UNION PACIFIC
QUALITY PRODUCTIVITY SAFETY
SIGNAL DESIGN

Date: 08-10-2010
Des:
Chk:
AFE:

UNION PACIFIC RAILROAD

ONE TRACK INTERMEDIATE
MT. VERNON SUBDIVISION
Office of Sr AVP Engineering - Signal/TCO Omaha, Nebraska

Sh.: 3
MP: 256.80
ID: 030125680.3S

TIF FILE ATTACHED TIF ID = 030125680.3S.TIF

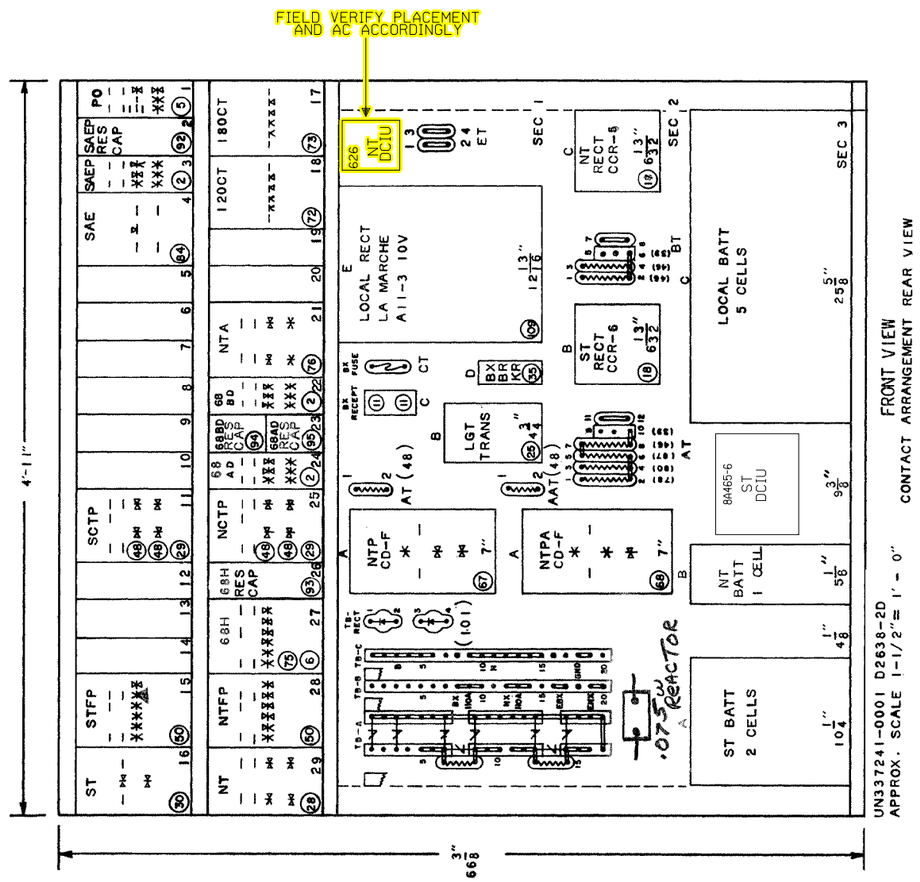

FRONT VIEW
CONTACT ARRANGEMENT REAR VIEW

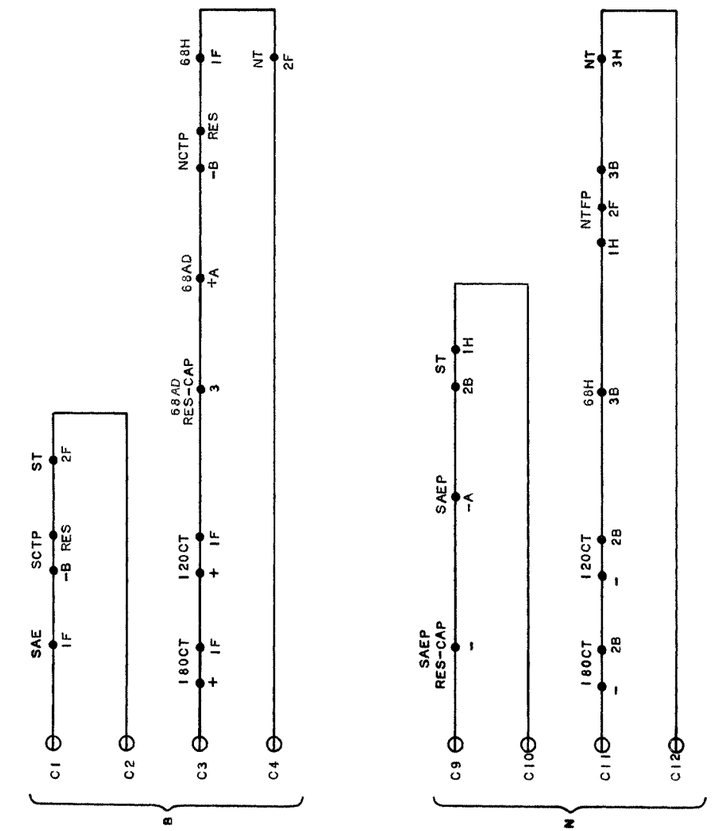

= IN

= OUT

CTC/BKG

					Designed: 12/22/11 INSTALL FLS/GATES & CONSTANT WARNING AT TR 227 M.P. 256.90 Req#: WO#: 11998 IS: /JPW / /CTC/JTB	Revised: 08-10-2010 INSTALLED FLS/GATES & CONSTANT WARNING AT CHURCH ROAD. M.P. 257.50 Req#: 17111 WO#: 44520 IS: 07-12-2010 /RLT MJD/WIT/CTC/JNM	REDRAWN FROM BAR CODE #156466 ORIGINAL DATE 10/29/1971	UNION PACIFIC QUALITY PRODUCTIVITY SAFETY SIGNAL DESIGN	Date: 08-10-2010 Des: Chk: AFE:	UNION PACIFIC RAILROAD ONE TRACK INTERMEDIATE MT. VERNON SUBDIVISION Office of Sr AVP Engineering - Signal/TCO Omaha, Nebraska	Sh.: 4 MP: 256.80 ID: 030125680.4S

TIF FILE ATTACHED TIF ID = 030125680.4S.TIF

Designed: 12/22/11
INSTALL FLS/GATES & CONSTANT WARNING AT TR 227 M.P. 256.90
Rec#: 15841 WO#: 11998 JPW
IS#: /CTC/JTB

Revised: 05-28-10 UPDATED BATTERY
Rec#: 16861 WO#: N/A
IS#: 06-24250 MJO/WITT

REV. 12-19-05 EXTENDED SIDING AND YARD TRACKS. W.O. #46287/201 REC. #13814 11-29-05 JWS JEH/WITT/RC/GWS

REV. 8-11-99 INST. CANJT. TR-249B INSTALLED 4-25-84 CGM MCB

REV. 2-15-83 REMOVE YELLOW 2568 SIGNAL 1-2-80 MCB

ST. LOUIS 3-3-72 DRAWN BY S&C CHECKED 6-27-73

UNION PACIFIC RAILROAD S-301-M
DW 254.18 SH. 1
PLACED IN SERVICE
INSPECTED BY

SIGNALS 2541-42 SALEM
TRACK CIRCUITS
MT. VERNON SUBDIVISION

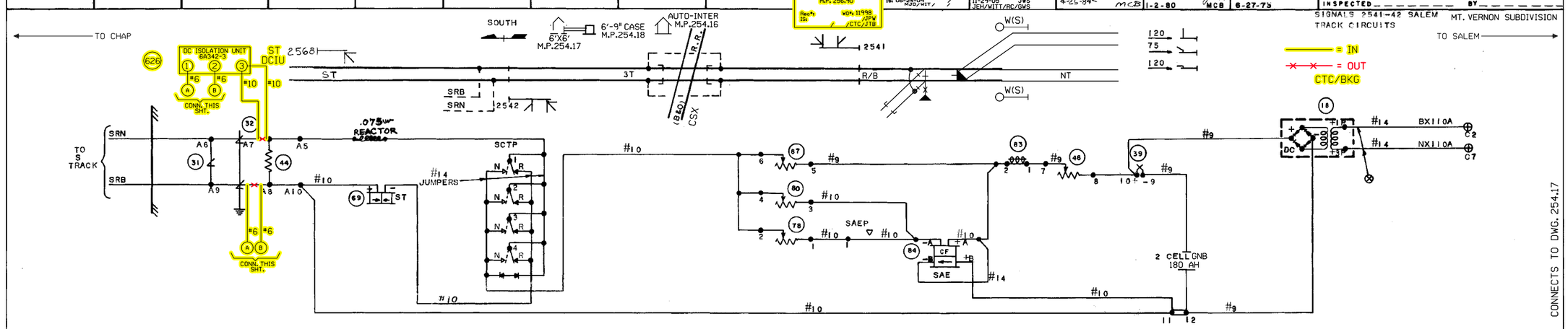

CONSTRUCTION NOTES:

1. FIELD TO ENSURE THIS CROSSING DESIGN TO BE AC'D IN ADDITION TO AC REC. #:16297.
2. INSTALL (1)- DUAL POLARITY DC CODED TRACK ISOLATION UNIT (TAB 626) ON THE ST TRACK AT THIS LOCATION.

NOTE:

⊗ - TWISTED

- WIRE AS SHOWN

CONNECTS TO DWG. 254.17

TIF FILE ATTACHED. TIF ID=030125418.1.TIF

ID:030125418.1

											REV. 12-19-05 EXTENDED SIDING AND YARD TRACKS. W.O. #46287/201 REC. #13614 11-29-05 JWS JEH/WITT/RC/GWS	REV. PER AC. 8-11-88	REV. 2-15-83 REMOVE YELLOW-2568 SIGNAL WJC 1-2-80 MCB	ST. LOUIS 10-29-72 DRAWN BY SBC CHECKED V.H.B. 6-22-73	UNION PACIFIC RAILROAD S-301-M DW 254.18 SH. 2 PLACED IN SERVICE INSPECTED BY	

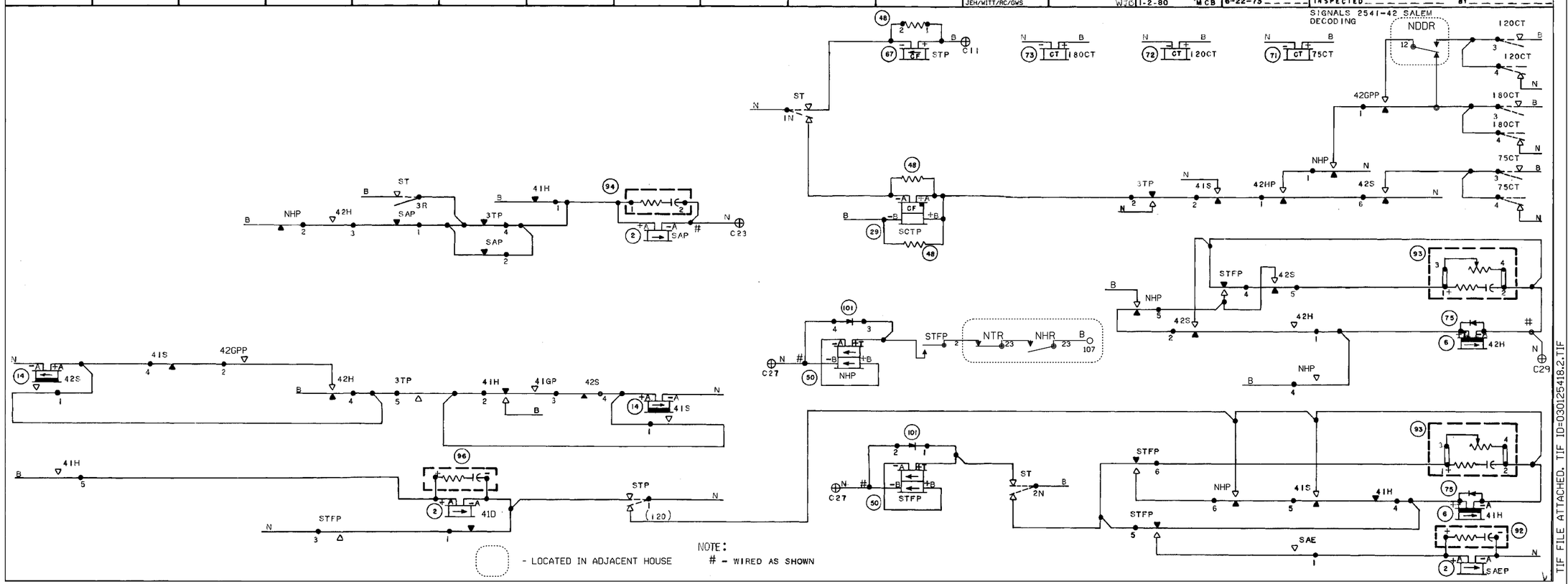

ID:030125418.2

TIF FILE ATTACHED. TIF ID=030125418.2.TIF

Revised: 05-28-10 UPDATED BATTERY	REV. 12-19-05 EXTENDED SIDING AND YARD TRACKS. W.O. #46287/201 REC. #13614 11-29-05 JJL JEH/WITT/RC/GWS	REV. PER A.C. 8-11-95 WJW	ST. LOUIS 10-29-72 DRAWN BY S&C CHECKED 6-22-73

UNION PACIFIC RAILROAD S-301-M SH. 3
DW 254.18
PLACED IN SERVICE
INSPECTED BY

SIGNALS 2541-42 SALEM
SW LOCK & INTERCONNECTING CIRCUITS

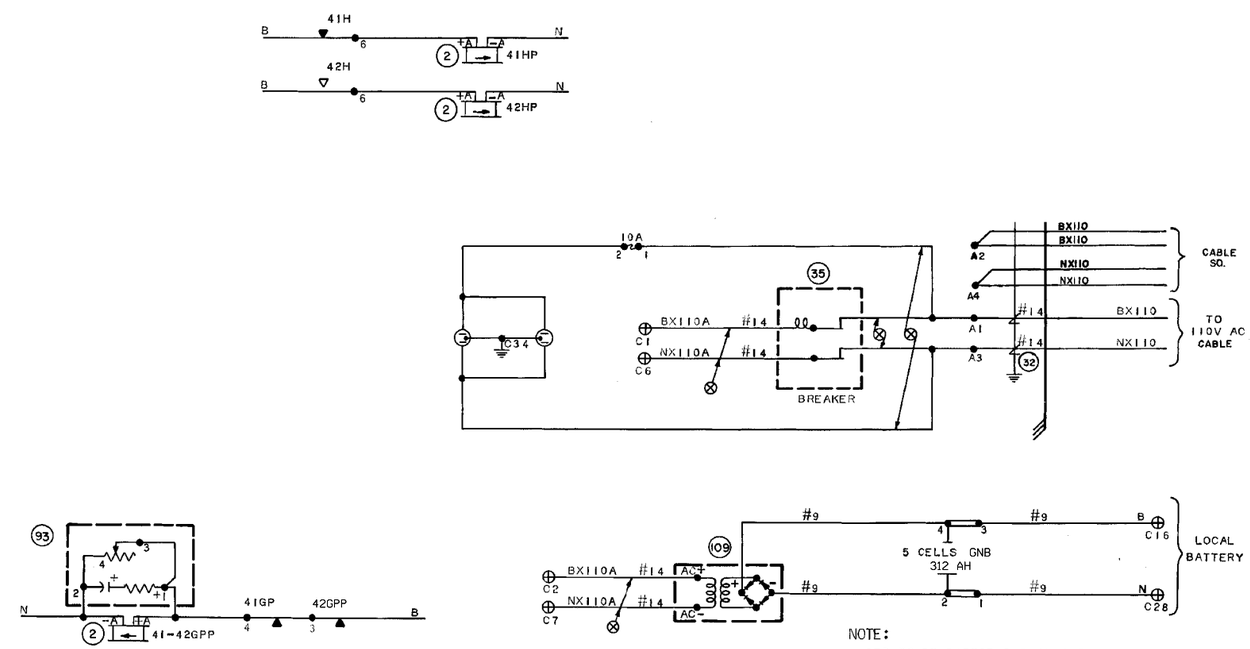

NOTE:
3TP TO BE DIRECT REPEATER OF TRACK RELAY. R.R. TO USE "LOSS OF SHUNT" REPEATER OF TRACK RELAY IN ROUTE-CHECK CIRCUIT

⊗ = TWISTED

ID:030125418.3

TIF FILE ATTACHED. TIF ID=030125418.3.TIF

Designed 12/22/71
INSTALL FLS/GATES & CONSTANT WARNING AT TR 227 M.P. 256.90
Rec'd: WO#: 11998 JPW
IS: / /CTC/ITB

Revised 09-28-10
UPDATED BATTERY
Rev'd: 16881 WO#: N/A
IS: DG/JPW/WITT/ /

REV. 12-19-05
EXTENDED SIDING AND YARD TRACKS.
W.O. #46287/201
REC. #13614
11-29-05 JJL
JEH/WITT/RC/GWS

REV. PER AC.
8-11-88
WJB

REV. 8-11-84
INST. CANT TR-249B
INSTALLED 4-25-84
MCB

REV. 2-14-83
REMOVE YELLOW-2568 SIGNAL.
1-2-80 MCB

ST. LOUIS 10-29-72
DRAWN BY S&C
CHECKED
6-22-73

UNION PACIFIC RAILROAD S-301-M
DW 254.18 SH. 4
PLACED IN SERVICE
INSPECTED BY

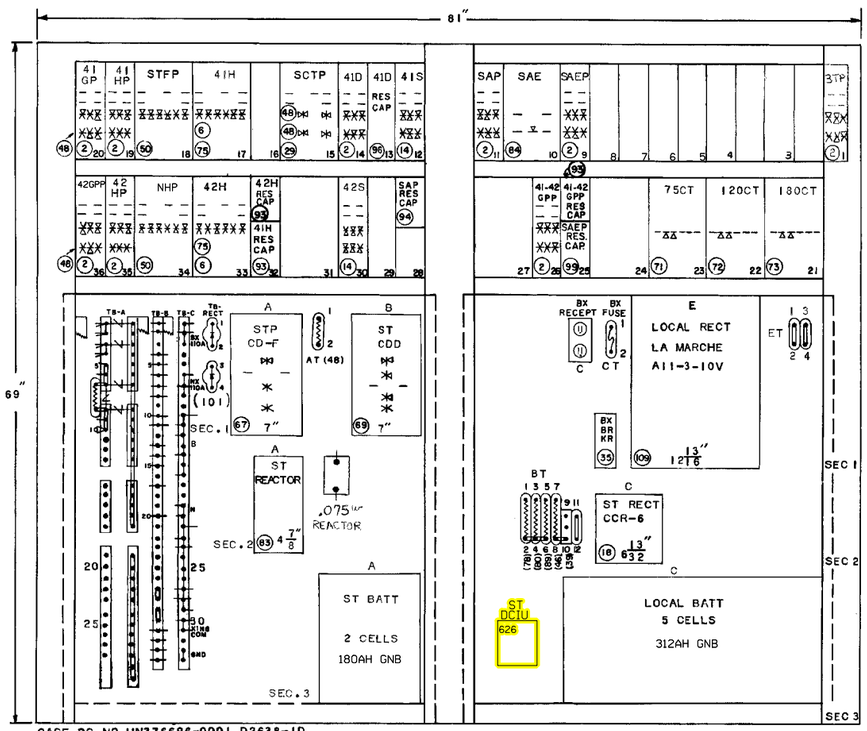

CASE PC NO UN376696-0001 D2638-1D
APPROX. SCALE 1-1/2" = 1'-0"
CASE 6'-9"

FRONT VIEW

CONTACT ARRANGEMENT REAR VIEW

= IN
= OUT
CTC/BKG

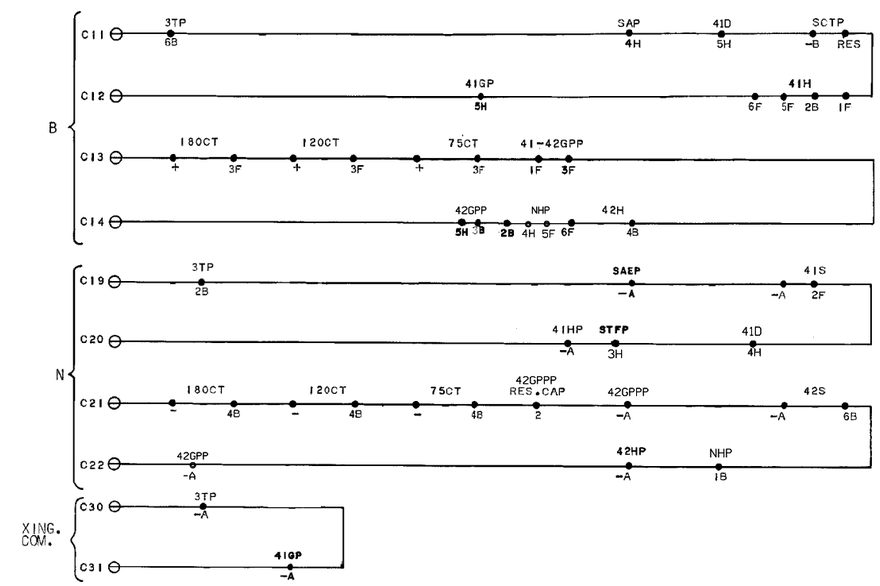

TIF FILE ATTACHED. TIF ID=030125418.4.TIF

ID:030125418.4