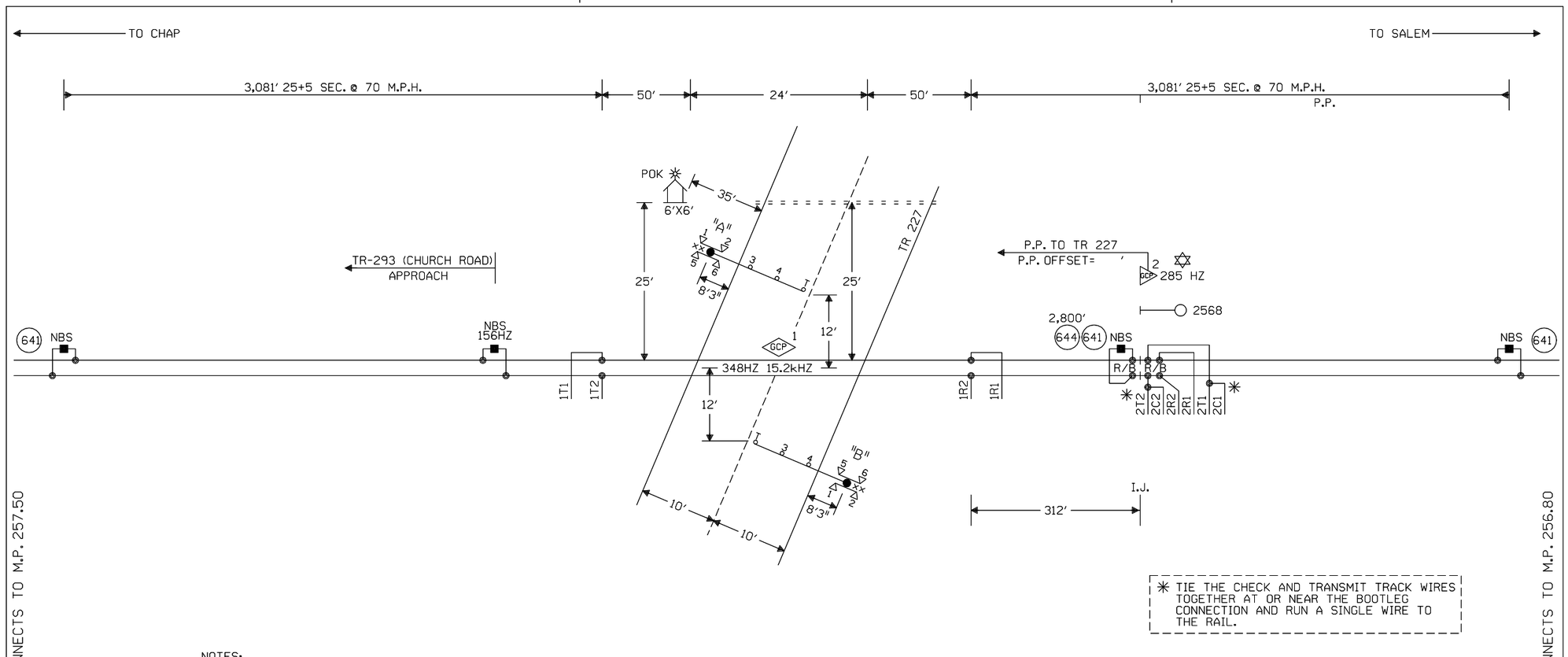

✳ TIE THE CHECK AND TRANSMIT TRACK WIRES TOGETHER AT OR NEAR THE BOOTLEG CONNECTION AND RUN A SINGLE WIRE TO THE RAIL.

NOTES:

⊗ = TWISTED WIRES
INSULATED 1 TWIST PER FT.
ALL TRACK WIRES 2C. #6

TRANSMITTER AND RECEIVER LEADS TO BE SEPARATED BY AT LEAST 12" IN TRENCH, LENGTHS SHOULD NOT EXCEED MANUFACTURER'S RECOMMENDATION.

TOP OF FOUNDATION TO BE AT SAME ELEVATION AS THE SURFACE OF THE TRAVELED WAY & NO MORE THAN 4" ABOVE THE SURFACE OF THE GROUND.

ALL BUNGALOW WIRING TO BE #16 AWG FLEX UNLESS OTHERWISE SPECIFIED EXCEPT ALL GROUND WIRE TO BE #6 AWG FLEX OR LARGER.

ALL WIRING IN GATE MECHANISM TO BE #10 "AWG FLEX".

REFER TO UP STANDARD DWG FOR BUNGALOW GROUNDING.

PORTABLE GENERATOR EXTENSION CORD FOR 240V TO 240V IS PROVIDED AS WELL AS A 120V TO 240V ADAPTER.

ALL LIGHTS TO BE 12" ROUNDELS.

= = = = = = 4" X 40' CONDUIT

LIGHTS: LED LIGHTS

GATE A: 18'
GATE B: 18'

xx = BELL

✡ = GCP TO OPERATE IN SEMI-BI DIRECTIONAL MODE. USE TAB 627 COUPLER.

CONSTRUCTION NOTES:

1. NEW GATE PLACEMENT BASED ON A 20' ROAD.
2. NEED TO MAINTAIN MINIMUM 120' ISLAND.

W(S) ←—○—→ E(N)

NEW SHEET

Designed: 12/22/11
INSTALL FLS/GATES & CONSTANT WARNING AT TR 227 M.P. 256.90
Rec#: WO#: 11998
IS: /JPW
/ /CTC/JTB

MODIFICATION LEVEL	
Q. A. LAST LEVEL CHECKED	DU
LAST LEVEL MOD THIS TYPICAL	DU
LAST LEVEL BY DESIGNER	DU
CHANGED FROM TYPICAL?	Y

REV 01.24.11 4K 1TKBG.1

UNION PACIFIC
QUALITY PRODUCTIVITY SAFETY
SIGNAL DESIGN

Date: 12/22/11
Des: CTC
Chk: JPW
AFE: 11998

UNION PACIFIC RAILROAD
SALEM, ILLINOIS
TR 227
MT. VERNON SUBDIVISION
Office of Sr AVP Engineering - Signal/TCO Omaha, Nebraska

Sh.: 1
DOT 167765N
MP: 256.90
ID: 030125690.1X

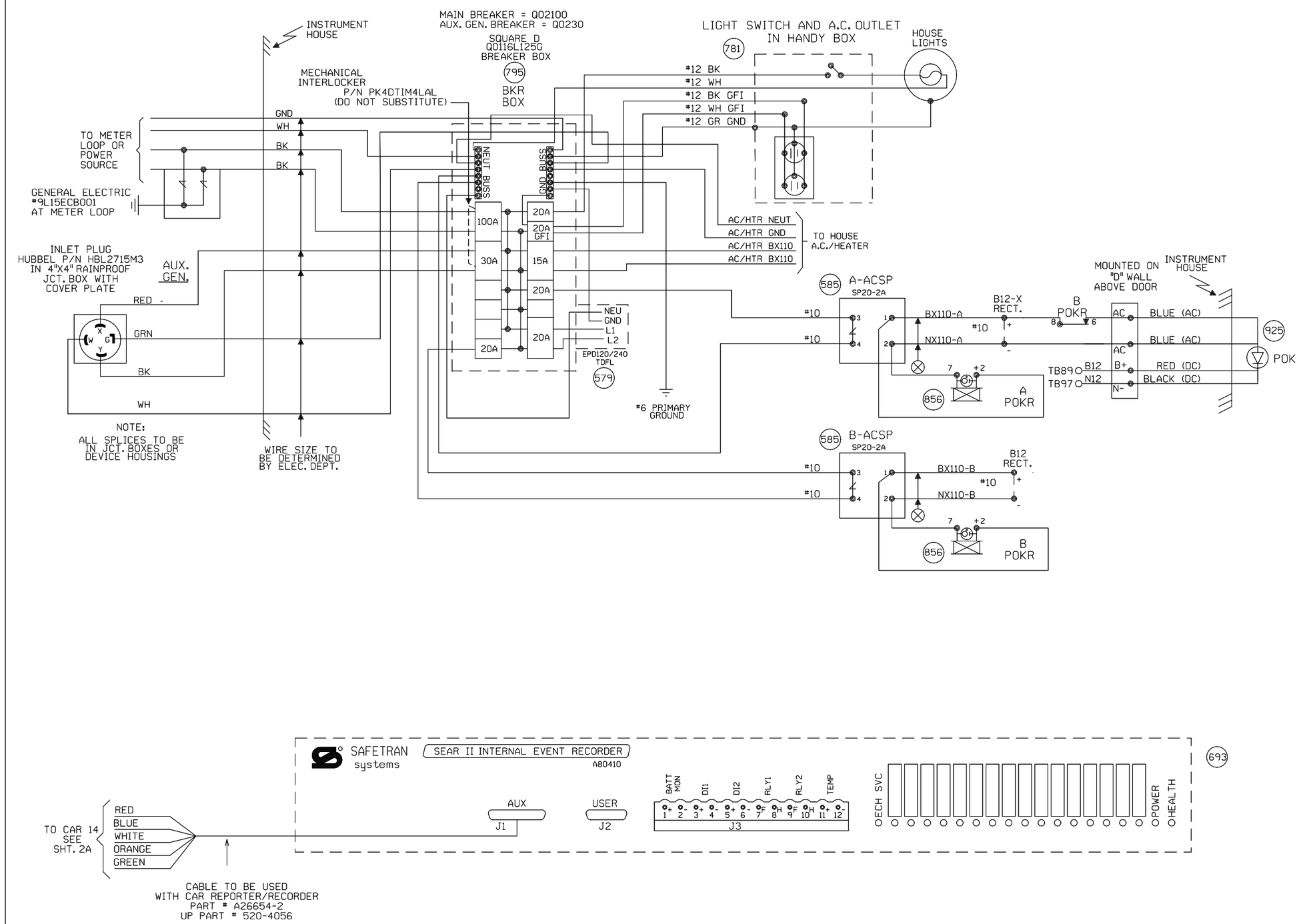

NEW SHEET

Designed: 12/22/11 INSTALL FLS/GATES & CONSTANT WARNING AT TR 227 M.P. 256.90 Rec#: WO#: 11998 IS: /JPW / /CTC/JTB	MODIFICATION LEVEL		UNION PACIFIC QUALITY PRODUCTIVITY SAFETY SIGNAL DESIGN	Date: 12/22/11 Des: CTC Chk: JPW AFE: 11998	UNION PACIFIC RAILROAD SALEM, ILLINOIS TR 227 MT. VERNON SUBDIVISION Office of Sr AVP Engineering - Signal/TCO Omaha, Nebraska	Sh.: 2 DOT 167765N MP: 256.90 ID: 030125690.2X
	Q. A. LAST LEVEL CHECKED	DU				
	LAST LEVEL MOD THIS TYPICAL	DU				
	LAST LEVEL BY DESIGNER	DU				
	CHANGED FROM TYPICAL?	Y				
	REV 01.24.11 4K SEARAC.2					

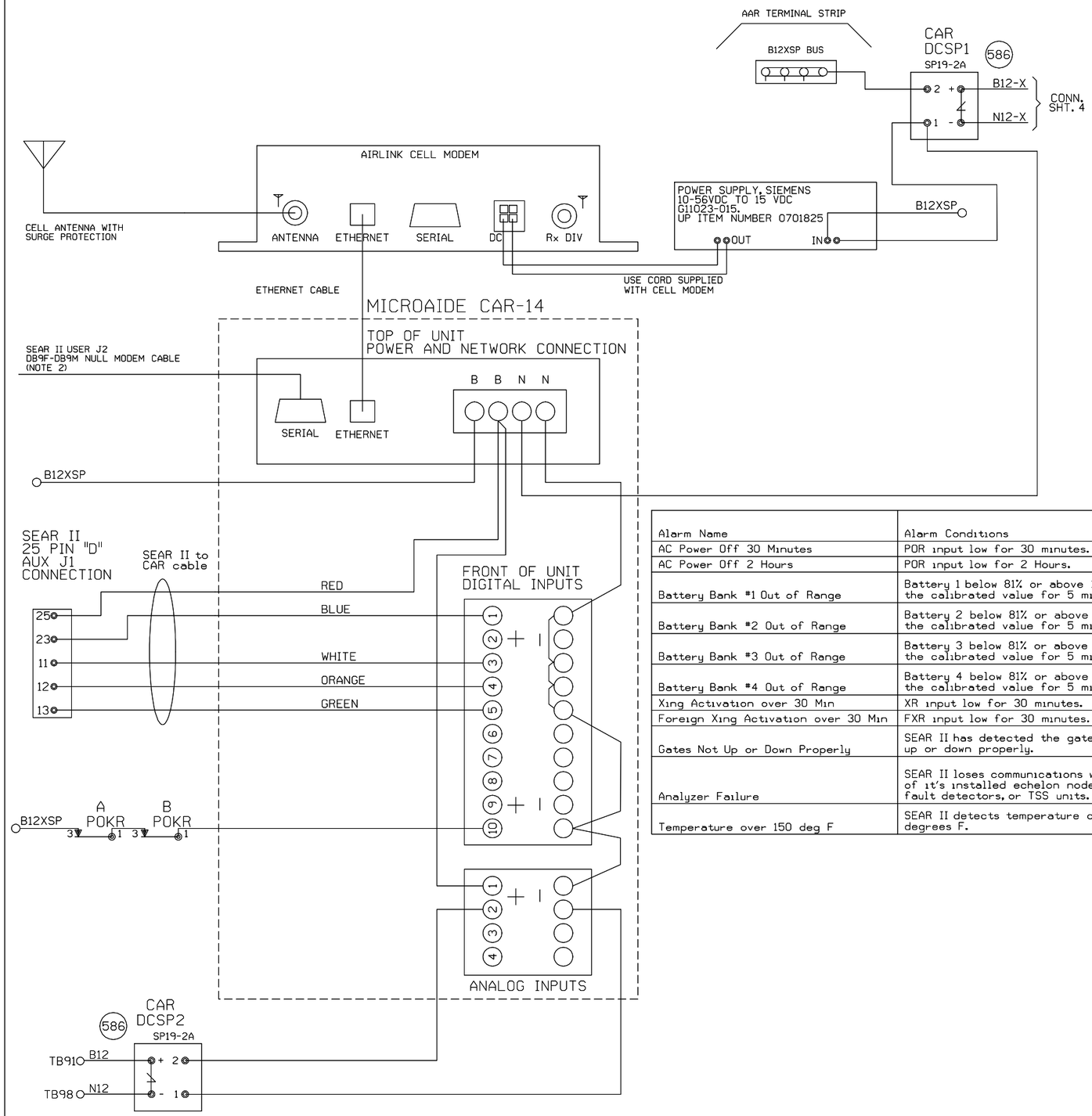

NOTE:
1) DO NOT JUMPER UNUSED INPUTS
2) THE CAR14 SERIAL PORT IS AVAILABLE TO ADD REMOTE CONNECTIVITY TO EXISTING LOGGING EQUIPMENT. USE NULL MODEM CABLE WITH SHIELDING DISCONNECTED AT ONE OR BOTH SIDES.

ANALOG INPUTS:
A1) B12X BATTERY BANK
A2) B12 BATTERY BANK
A3) BATTERY BANK 3
A4) BATTERY BANK 4

DIGITAL INPUTS
D1) XR (BLUE WIRE)
D2) FOREIGN XR
D3) ANALYZER FAILURE (WHITE WIRE)
D4) HIGH TEMPERATURE (ORANGE WIRE)
D5) GATES NOT UP OR DOWN PROPERLY (GREEN WIRE)
D10) POWER OFF INDICATION

Alarm Name	Alarm Conditions	Alarm Clearing Conditions	Cleared by Maintainer Mode?
AC Power Off 30 Minutes	POR input low for 30 minutes.	POR input high for 5 minutes.	No
AC Power Off 2 Hours	POR input low for 2 Hours.	POR input high for 5 minutes.	No
Battery Bank #1 Out of Range	Battery 1 below 81% or above 120% of the calibrated value for 5 minutes.	Battery 1 within acceptable range for 5 minutes.	No
Battery Bank #2 Out of Range	Battery 2 below 81% or above 120% of the calibrated value for 5 minutes.	Battery 2 within acceptable range for 5 minutes.	No
Battery Bank #3 Out of Range	Battery 3 below 81% or above 120% of the calibrated value for 5 minutes.	Battery 3 within acceptable range for 5 minutes.	No
Battery Bank #4 Out of Range	Battery 4 below 81% or above 120% of the calibrated value for 5 minutes.	Battery 4 within acceptable range for 5 minutes.	No
Xing Activation over 30 Min	XR input low for 30 minutes.	XR input high for 10 seconds.	Yes
Foreign Xing Activation over 30 Min	FXR input low for 30 minutes.	FXR input high for 10 seconds.	Yes
Gates Not Up or Down Properly	SEAR II has detected the gates are not up or down properly.	SEAR II has detected the gates are up or down properly.	No
Analyzer Failure	SEAR II loses communications with any of it's installed echelon nodes, ground fault detectors, or TSS units.	SEAR II has recovered after an analyzer failure alarm.	No
Temperature over 150 deg F	SEAR II detects temperature over 150 degrees F.	SEAR II sensor detects temperature is OK after a High-Temp alarm.	No

NEW SHEET

Designed: 12/22/11
INSTALL FLS/GATES & CONSTANT WARNING AT TR 227 M.P. 256.90
Rec#: WO#: 11998
IS: JPW
/ /CTC/JTB

MODIFICATION LEVEL	
Q. A. LAST LEVEL CHECKED	DU
LAST LEVEL MOD THIS TYPICAL	DU
LAST LEVEL BY DESIGNER	DU
CHANGED FROM TYPICAL?	Y

REV 01.24.11 4K ACDCCAR14SI1.3

UNION PACIFIC
QUALITY PRODUCTIVITY SAFETY
SIGNAL DESIGN

Date: 12/22/11
Des: CTC
Chk: JPW
AFE: 11998

UNION PACIFIC RAILROAD
SALEM, ILLINOIS
TR 227
MT. VERNON SUBDIVISION
Office of Sr AVP Engineering - Signal/TCO Omaha, Nebraska

Sh.: 2A
DOT 167765N
MP: 256.90
ID: 030125690.2AX

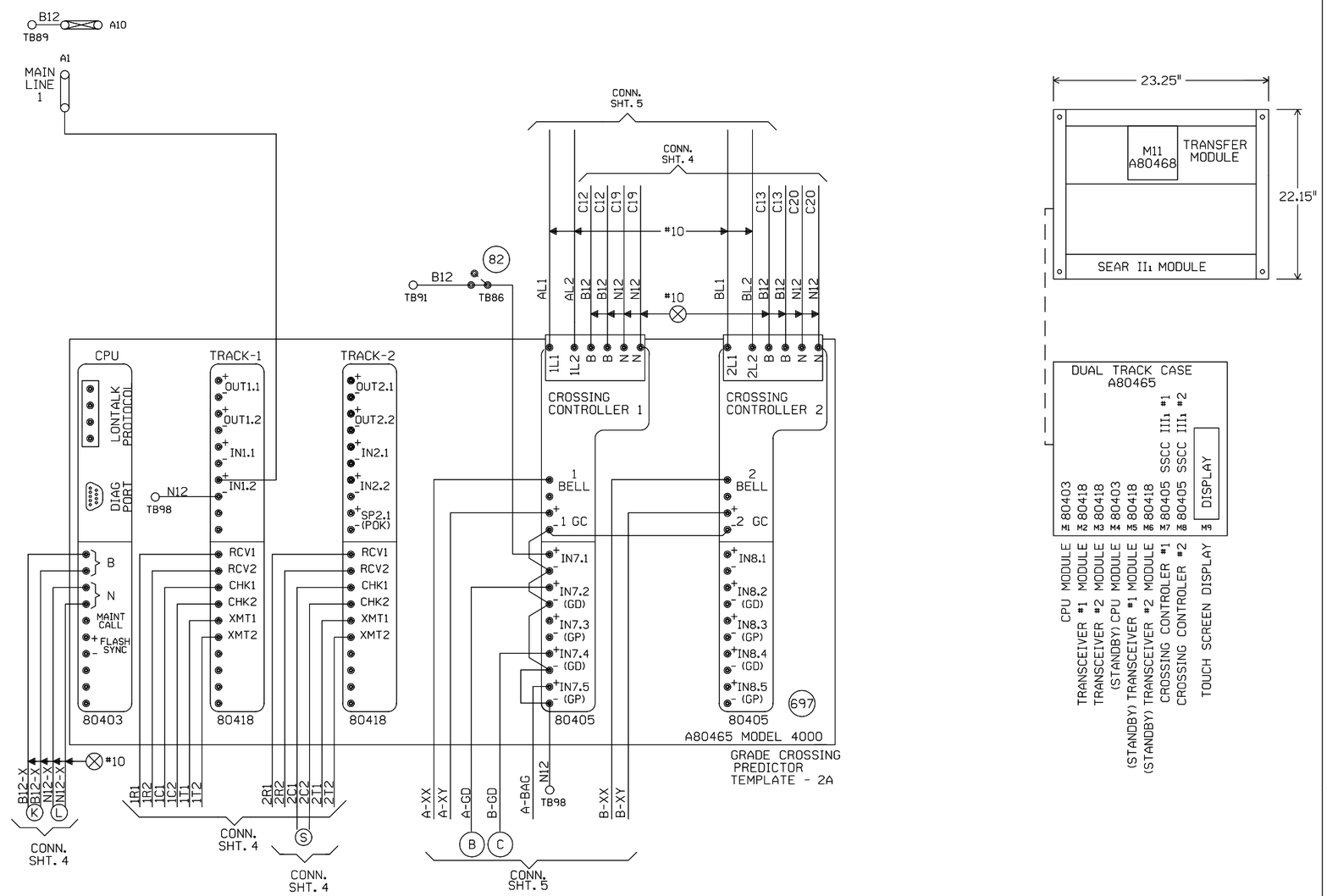

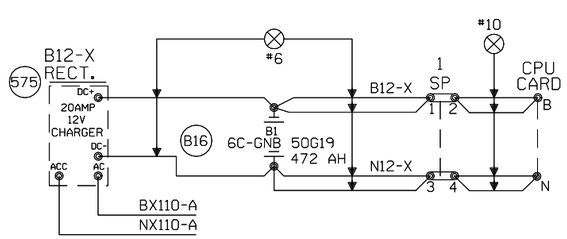

"Mf" FREQUENCY (HZ)	MAXIMUM TRANSMIT WIRE LENGTH (FEET)
86	100
114	125
156	150
211	200
285-970	250

NOTE:
EACH TRANSMITTER TO RAIL WIRE FROM XMT1 AND XMT2 MUST NOT EXCEED THE MAXIMUM LENGTH SPECIFIED IN THE TABLE SHOWN. THE RECEIVER WIRE LENGTH IS NOT CRITICAL. DOES NOT APPLY TO 6 TRACK WIRE APPLICATION.

NEW SHEET

Designed: 12/22/11
INSTALL FLS/GATES & CONSTANT WARNING AT TR 227 M.P. 256.90
Rec*: WO*: 11998
IS: JPW / /CTC/JTB

MODIFICATION LEVEL	
O. A. LAST LEVEL CHECKED	DU
LAST LEVEL MOD THIS TYPICAL	DU
LAST LEVEL BY DESIGNER	DU
CHANGED FROM TYPICAL?	Y
rev 01.24.11 4K 2TKGF.3	

UNION PACIFIC
QUALITY PRODUCTIVITY SAFETY
SIGNAL DESIGN

Date: 12/22/11
Des: CTC
Chk: JPW
AFE: 11998

UNION PACIFIC RAILROAD
SALEM, ILLINOIS
TR 227
MT. VERNON SUBDIVISION
Office of Sr AVP Engineering - Signal/TCO Omaha, Nebraska

Sh.: 3
DOT 167765N
MP: 256.90
ID: 030125690.3X

```
Minimum Program Steps Report
----------------------------

Location and SIN
----------------
DOT Number: 167765N
Milepost Number: 256.90
Site Name: SALEM, IL

SIN: 762010010016 *

* Parameter is part of office check number calculation.

MCF and Template Selection
--------------------------
MCF Name: GCP-T6X-02-4.mcf
MCF Revision: 24
MCFCRC: 09FC363B

Template = 2A:4 Bi, 2 Rem (OCCN) *

* Parameter is part of office check number calculation.

Minimum Program Steps
---------------------
TEMPLATE:  track 1-Bi, Island
Track 1 : GCP Frequency = 348 Hz (Field,TCN)
Track 1 : Approach Distance = 3081 ft (Set in Field,TCN)
Track 1 : Prime Warning Time = 25 sec (OCCN) *
Track 1 : GCP Transmit Level = Medium (Set in Field,TCN)
Track 1 : Isl Frequency = 15.2 kHz (Set in Field)

TEMPLATE:  track 2-Remote Prime
Track 2 : GCP Frequency = 285 Hz (Field,TCN)
Track 2 : Approach Distance = 2769 ft (Set in Field,TCN)
Track 2 : Prime Warning Time = 25 sec (OCCN) *
Track 2 : Prime Offset Distance = 312 ft (Set in Field)
Track 2 : GCP Transmit Level = Medium (Set in Field,TCN)
Track 2 : Uni/Bi/Sim-Bidirnl = Sim. Bidirnl (OCCN) *

TEMPLATE:  AND 1 XR
AND 1 Enable Used = Yes (OCCN) *

TEMPLATE:  SSCC
SSCC 1 : Lamp Neutral Test = Off (Set in Field)
SSCC 2 : Lamp Neutral Test = Off (Set in Field)

TEMPLATE:  OOS
OOS Control = OOS IPs (OCCN) *
T2 OOS Control = None (OCCN) *

TEMPLATE:  IP assignment 1
IN 1.2 = Out Of Service IP 1 (OCCN) *

TEMPLATE:  IP assignment SSCC
IN 7.1 = AND 1 XR Enable (OCCN) *

GCP:  track 1
Track 1 : Island Distance = 124 ft (Set in Field,TCN)

ADVANCED:  site options
Daylight Savings = On (Set in Field)

* Parameter is part of office check number calculation.

Check Numbers
-------------
Office Check Number: 5E9A9E03
Config. Check Number: 760F40D1
(Based on MCF Revision 24)

Parameters not part of office check number calculation:

Track 1 : GCP Frequency = 348 Hz
Track 1 : Approach Distance = 3081 ft (Set in Field)
Track 1 : GCP Transmit Level = Medium (Set in Field)
Track 1 : Isl Frequency = 15.2 kHz
Track 2 : GCP Frequency = 285 Hz
Track 2 : Approach Distance = 2769 ft (Set in Field)
Track 2 : Prime Offset Distance = 312 ft (Set in Field)
Track 2 : GCP Transmit Level = Medium (Set in Field)
SSCC 1 : Lamp Neutral Test = Off (Set in Field)
SSCC 2 : Lamp Neutral Test = Off (Set in Field)
Track 1 : Island Distance = 124 ft (Set in Field)
Daylight Savings = On (Set in Field)

Comments
--------
<none>

Configuration Package File
--------------------------
Filename: 030125690_167765N.pac
Path: H:\01-Xing\upT10241\GCP Programs\
Date/Time: 4/16/2012 12:30:29
```

NEW SHEET

Designed: 12/22/11
INSTALL FLS/GATES & CONSTANT WARNING AT TR 227 M.P. 256.90
Req'd: WO#: 11998
IS: /JPW
/ /CTC/JTB

NOTE: Actual OFFSET and ISLAND distances must be verified by field personnel.

UNION PACIFIC
QUALITY PRODUCTIVITY SAFETY
SIGNAL DESIGN

Date:	12/22/11
Des:	CTC
Chk:	JPW
AFE:	11998

UNION PACIFIC RAILROAD
SALEM, ILLINOIS
TR 227
MT. VERNON SUBDIVISION
Office of Sr AVP Engineering - Signal/TCO Omaha, Nebraska

Sh.:	3A
DOT	167765N
MP:	256.90
ID:	030125690.3AX

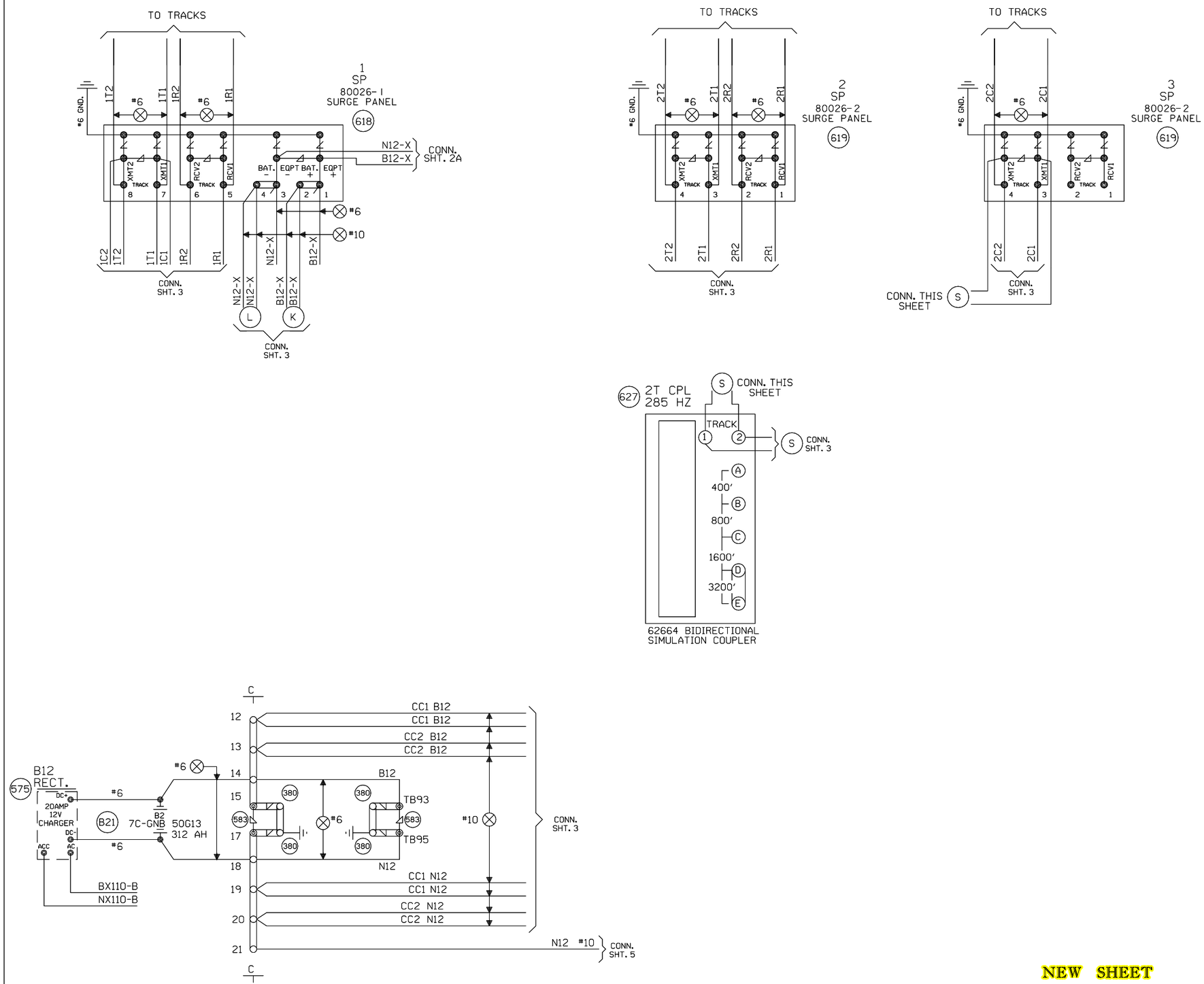

NEW SHEET

Designed: 12/22/11	
INSTALL FLS/GATES & CONSTANT WARNING AT TR 227 M.P. 256.90	
Rec*:	WO*: 11998
IS: /	/JPW /CTC/JTB

MODIFICATION LEVEL	
O. A. LAST LEVEL CHECKED	DU
LAST LEVEL MOD THIS TYPICAL	DU
LAST LEVEL BY DESIGNER	DU
CHANGED FROM TYPICAL?	Y
REV 01.24.11 4K 4TKSPGFC.4	

UNION PACIFIC
QUALITY PRODUCTIVITY SAFETY
SIGNAL DESIGN

Date:	12/22/11
Des:	CTC
Chk:	JPW
AFE:	11998

UNION PACIFIC RAILROAD

SALEM, ILLINOIS
TR 227
MT. VERNON SUBDIVISION
Office of Sr AVP Engineering - Signal/TCO Omaha, Nebraska

Sh.:	4
DOT	167765N
MP:	256.90
ID:	030125690.4X