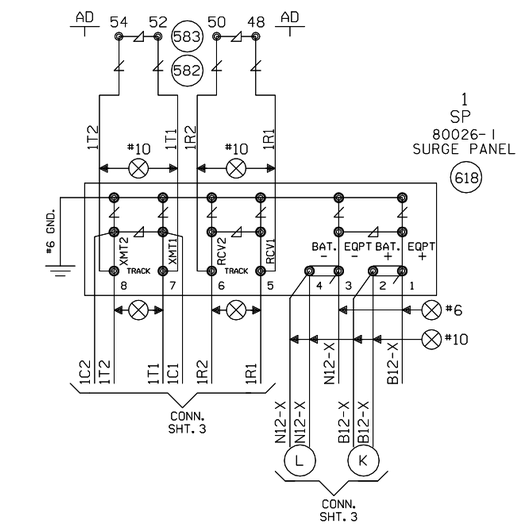

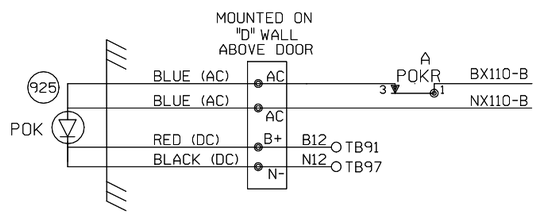

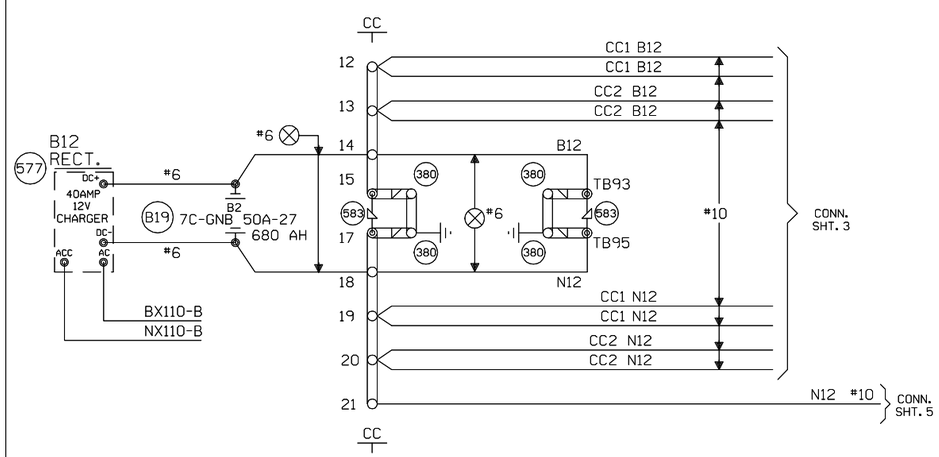

SALEM, ILLINOIS
TR-293 (CHURCH ROAD)
M.P. 257.50
MT. VERNON SUBDIVISION
D.O.T.#167 764G

					Revised: 08-10-2010 INSTALLED FLS/GATES & CONSTANT WARNING AT CHURCH ROAD. M.P. 257.50 Req#: 17111 WO#: 44520 IS:07-12-2010 /RLT MJD/WIT/CTC/JNM	MODIFICATION LEVEL Q.A. LAST LEVEL CHECKED DO LAST LEVEL MOD THIS TYPICAL DO LAST LEVEL BY DESIGNER DO CHANGED FROM TYPICAL? Y REV 09.01.06 4K 4TKSPGFC.4	UNION PACIFIC QUALITY PRODUCTIVITY SAFETY SIGNAL DESIGN	DES: CTC DIG: CTC CHK: RLT A.F.E. 44520 ID= 030125750.4X	**UNION PACIFIC RAILROAD** SALEM, ILLINOIS TO CHAP, ILLINOIS C.T.C. CIRCUITS Office of Sr.AVP Engineering - Signal/TCO Omaha, Nebraska	DATE 02-20-04 SHEET 4 DWG 257.50 S-301

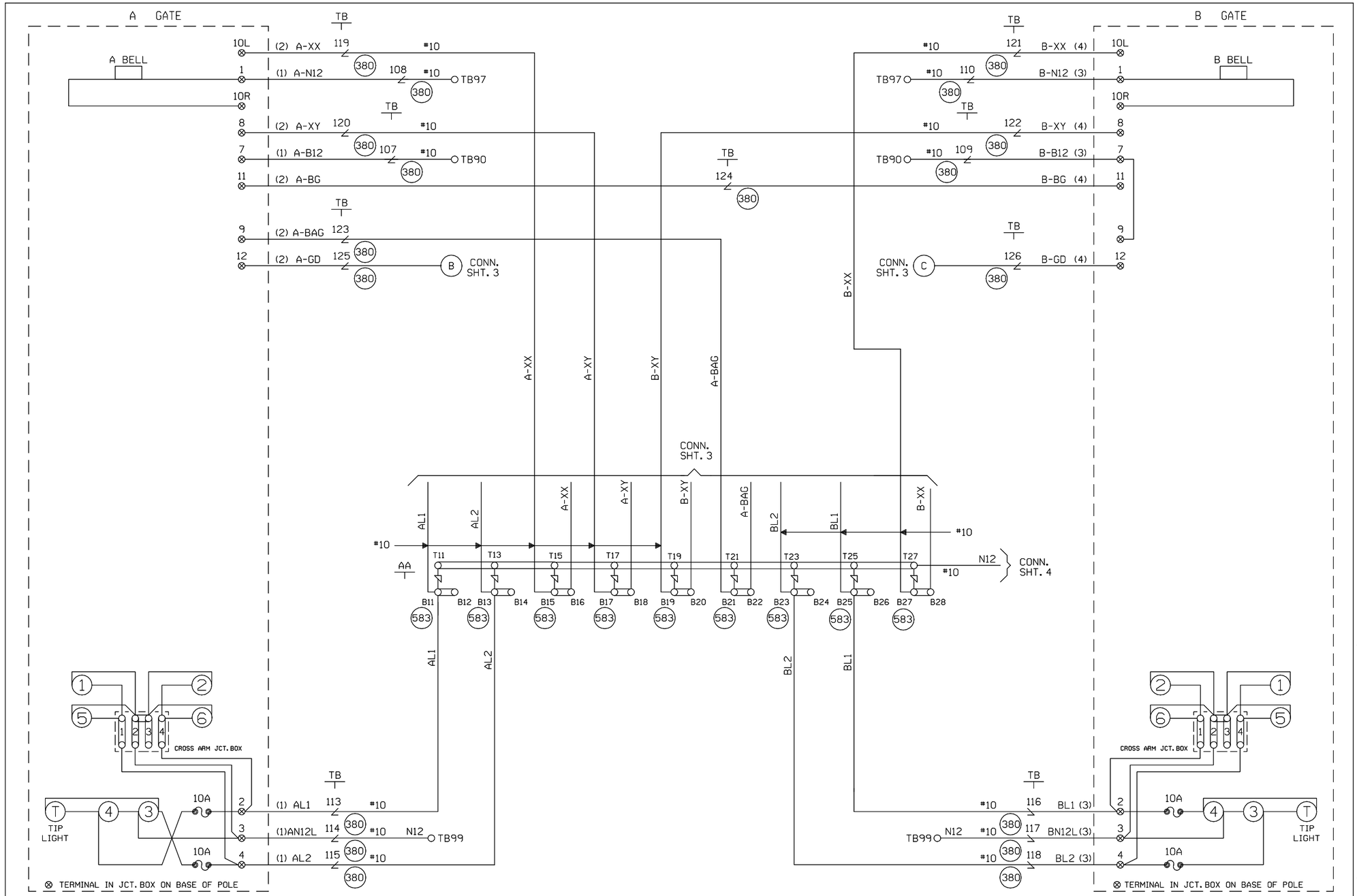

CABLE TABULATION

CABLE NO. 1 5C. NO.6 U.G.B.T.
CABLE NO. 2 7C. NO.14 U.G.B.T.
CABLE NO. 3 5C. NO.6 U.G.B.T.
CABLE NO. 4 7C. NO.14 U.G.B.T.

SALEM, ILLINOIS
TR-293 (CHURCH ROAD)
M.P. 257.50
MT. VERNON SUBDIVISION
D.O.T.#167 764G

Revised: 08-10-2010
INSTALLED FLS/GATES & CONSTANT WARNING AT CHURCH ROAD. M.P. 257.50
Rec#: 17111 WO#: 44520
IS:07-12-2010 /RLT
MJD/WIT/CTC/JNM

MODIFICATION LEVEL	
Q. A. LAST LEVEL CHECKED	DO
LAST LEVEL MOD THIS TYPICAL	DO
LAST LEVEL BY DESIGNER	DO
CHANGED FROM TYPICAL?	Y
REV 09.01.06 4K GFCTYP.5	

UNION PACIFIC
QUALITY PRODUCTIVITY SAFETY
SIGNAL DESIGN

DES: CTC
DIG: CTC
CHK: RLT
A.F.E. 44520
ID= 030125750.5X

UNION PACIFIC RAILROAD

SALEM, ILLINOIS
TO CHAP, ILLINOIS
C.T.C. CIRCUITS

Office of Sr.AVP Engineering - Signal/TCO Omaha, Nebraska

DATE 02-20-04
SHEET 5
DWG 257.50
S-301

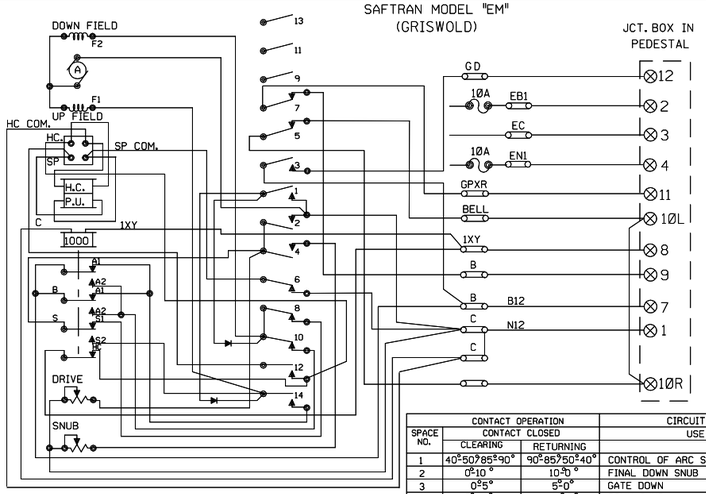

SPACE NO.	CONTACT OPERATION: CONTACT CLOSED CLEARING	CONTACT OPERATION: CONTACT CLOSED RETURNING	CIRCUIT BREAKER FUNCTIONS: USE OF CONTACT
1	40°-50°/85°-90°	90°-85°/50°-40°	CONTROL OF ARC SUPRESSING RECTIFIERS
2	0°-10°	10°-0°	FINAL DOWN SNUB
3	0°-5°	5°-0°	GATE DOWN
4	0°-44°	44°-0°	DOWN SNUB
5	10°-90°	90°-10°	TO CUT OFF BELL WHEN GATE ARM IS DOWN
6	80°-90°	90°-80°	CONTROL OF SOLENOID PICK UP
7	80°-90°	90°-80°	TO CONTROL GPR RELAY & KEEP FLASHING LIGHTS OPERATING UNTIL GATES CLEAR
8	0°-5°/80°-90°	90°-80°/75°-0°	UP SNUB
9	—	—	SPARE
10	45°-90°	90°-45°	MOTOR CUTOUT(DOWN)
11	—	—	SPARE
12	0°-90°	80°-0°	OPERATED BY MOTOR CUTOUT SWITCH TO CUT OFF CURRENT FROM SOLENOID PICKUP
13	—	—	NO CAM
14	0°-90°	80°-0°	MOTOR CUTOUT(UP)

WCH 3597-RB

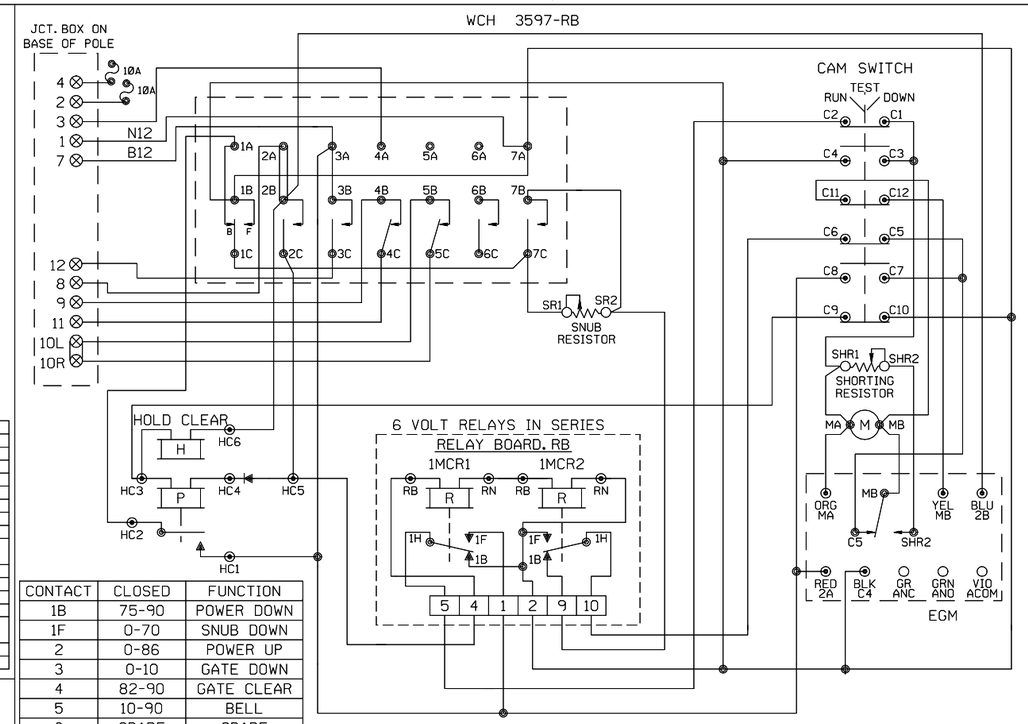

CONTACT	CLOSED	FUNCTION
1B	75-90	POWER DOWN
1F	0-70	SNUB DOWN
2	0-86	POWER UP
3	0-10	GATE DOWN
4	82-90	GATE CLEAR
5	10-90	BELL
6	SPARE	SPARE
7	0-10	SNUB

WCH 3593-E

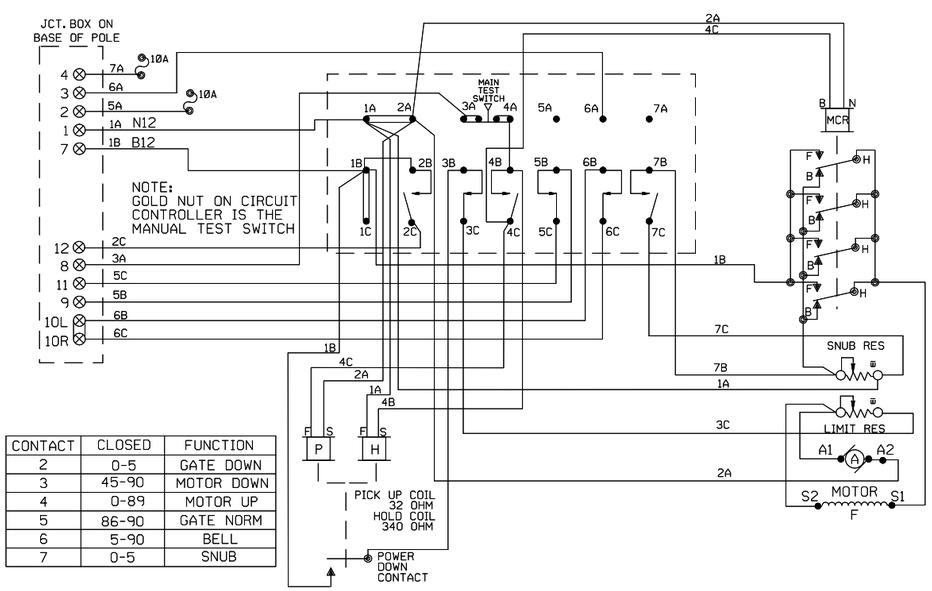

CONTACT	CLOSED	FUNCTION
2	0-5	GATE DOWN
3	45-90	MOTOR DOWN
4	0-89	MOTOR UP
5	86-90	GATE NORM
6	5-90	BELL
7	0-5	SNUB

WCH 3597

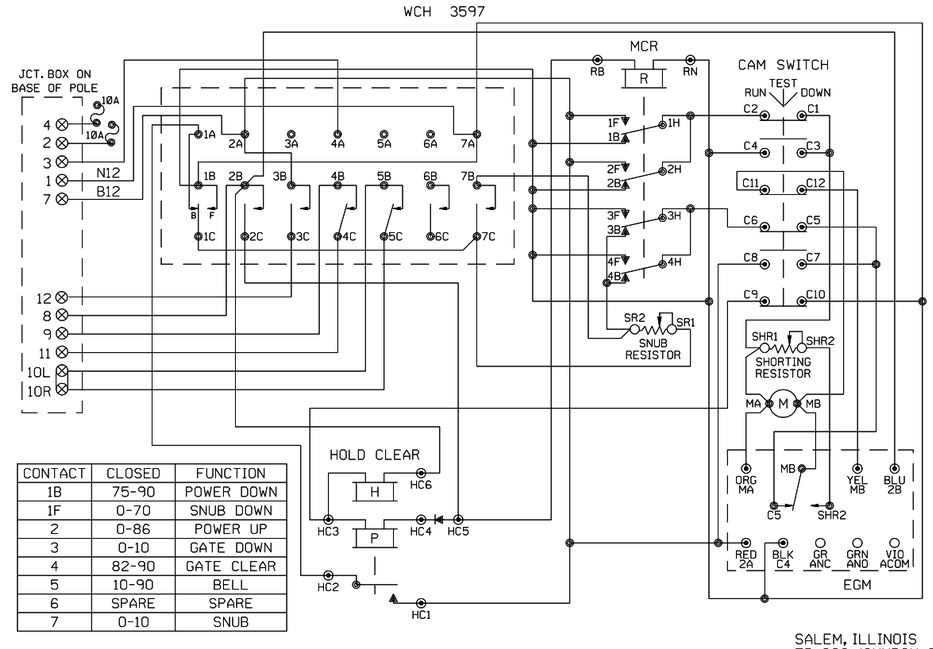

CONTACT	CLOSED	FUNCTION
1B	75-90	POWER DOWN
1F	0-70	SNUB DOWN
2	0-86	POWER UP
3	0-10	GATE DOWN
4	82-90	GATE CLEAR
5	10-90	BELL
6	SPARE	SPARE
7	0-10	SNUB

SHOW TYPE MECH. INSTALLED

ALL MECHANISMS SHOWN IN THE CLEAR POSITION

JCT. BOX ON BASE POLE

L	R	L	R
1		7	
2		8	
3		9	
4		10	
5		11	
6		12	

SALEM, ILLINOIS
TR-293 (CHURCH ROAD)
M.P. 257.50
MT. VERNON SUBDIVISION
D.O.T.#167 764G

Revised: 08-10-2010
INSTALLED FLS/GATES & CONSTANT WARNING AT CHURCH ROAD. M.P. 257.50
Rec#: 17111 WO#: 44520
IS:07-12-2010 /RLT
MJD/WIT/CTC/JNM

MODIFICATION LEVEL	
Q.A. LAST LEVEL CHECKED	DO
LAST LEVEL MOD THIS TYPICAL	DO
LAST LEVEL BY DESIGNER	DO
CHANGED FROM TYPICAL?	N

REV 09.01.06 4K GWIRING.DGN

UNION PACIFIC
QUALITY PRODUCTIVITY SAFETY
SIGNAL DESIGN

DES: CTC
DIG: CTC
CHK: RLT
A.F.E. 44520
ID= 030125750.6X

UNION PACIFIC RAILROAD

SALEM, ILLINOIS
TO CHAP, ILLINOIS
C.T.C. CIRCUITS

Office of Sr.AVP Engineering - Signal/TCO Omaha, Nebraska

DATE 02-20-04
SHEET 6
DWG 257.50
S-301

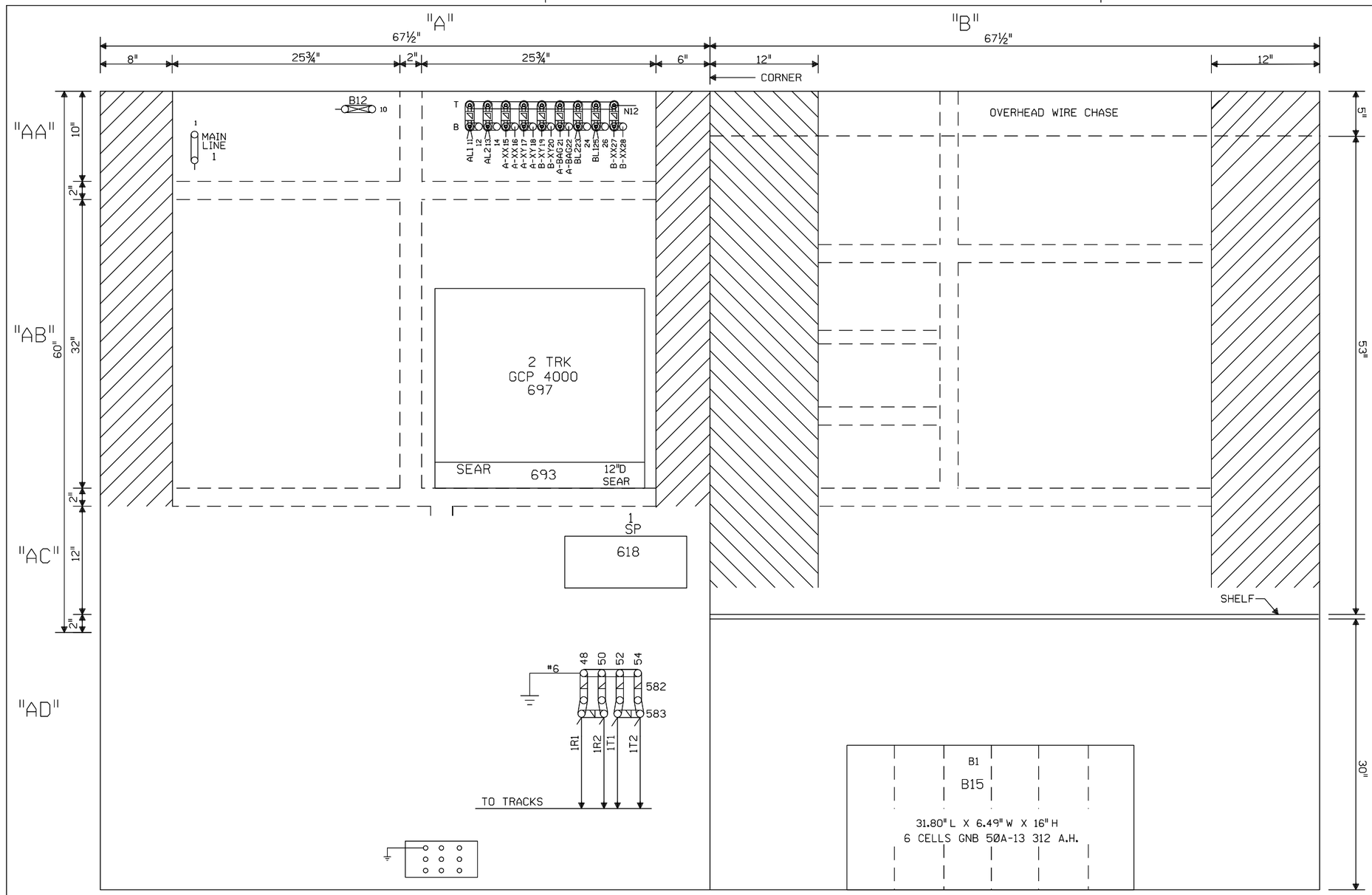

NOTE: ALL DIMENSIONS SHOWN ARE APPROXIMATE.

0 1 2 3 4 FEET

SCALE: 1.5 INCHES = 1 FOOT

SALEM, ILLINOIS
TR-293 (CHURCH ROAD)
M.P. 257.50
MT. VERNON SUBDIVISION
D.O.T.#167 764G

Revised: 08-10-2010
INSTALLED FLS/GATES & CONSTANT WARNING AT CHURCH ROAD. M.P. 257.50
Rec#: 17111 WO#: 44520
IS:07-12-2010 /RLT
MJD/WIT/CTC/JNM

MODIFICATION LEVEL	
Q. A. LAST LEVEL CHECKED	DO
LAST LEVEL MOD THIS TYPICAL	DO
LAST LEVEL BY DESIGNER	DO
CHANGED FROM TYPICAL?	Y

rev 09.01.06 4K 4TKGFC.8

UNION PACIFIC
QUALITY PRODUCTIVITY SAFETY
SIGNAL DESIGN

DES:	CTC
DIG:	CTC
CHK:	RLT
A.F.E.	44520
ID= 030125750.7X	

UNION PACIFIC RAILROAD

SALEM, ILLINOIS
TO CHAP, ILLINOIS
C.T.C. CIRCUITS

Office of Sr.AVP Engineering - Signal/TCO Omaha, Nebraska

DATE	02-20-04
SHEET	7
DWG	257.50
	S-301

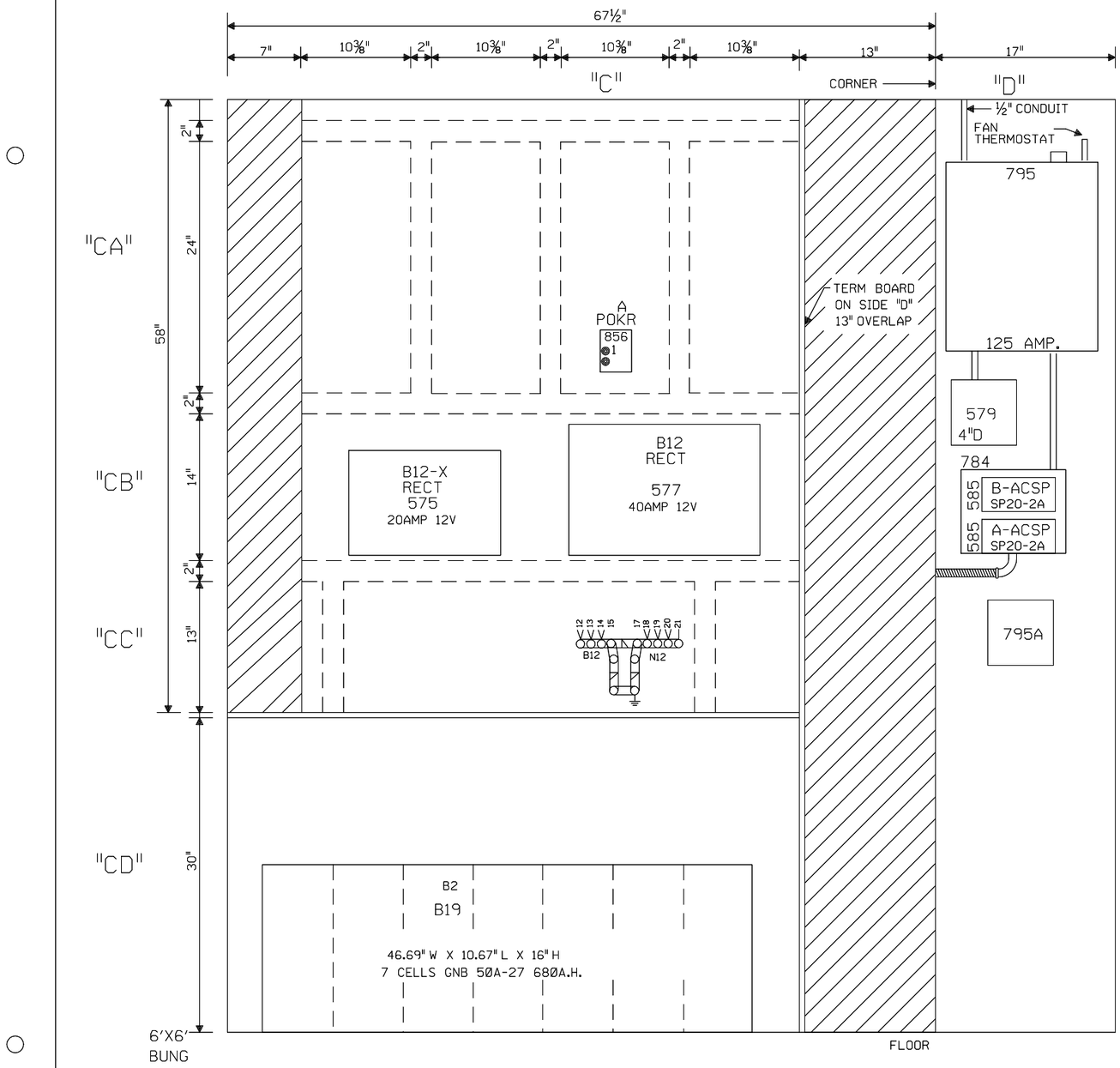

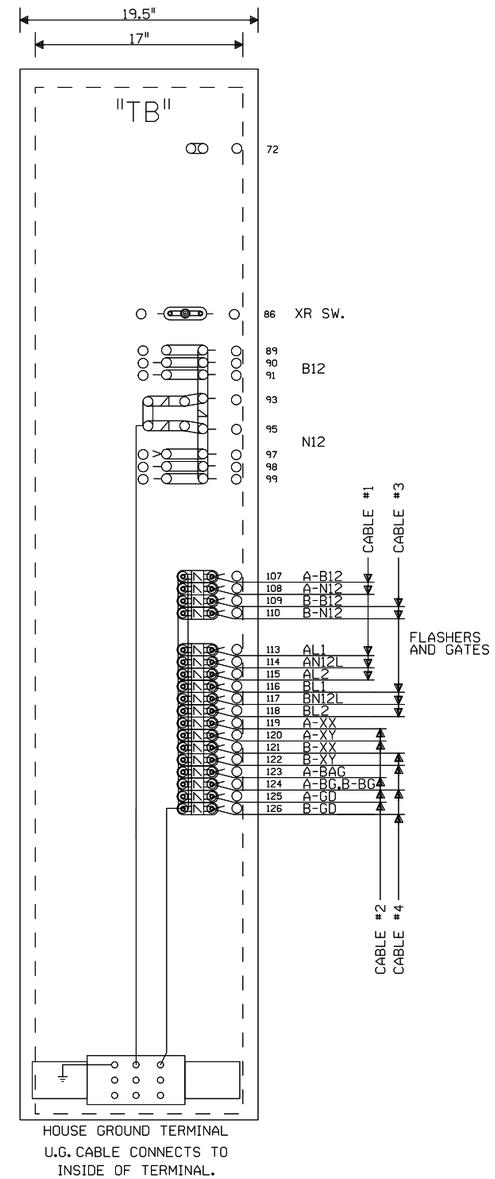

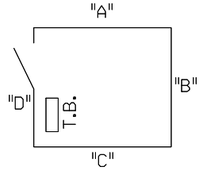

NOTE: ALL DIMENSIONS SHOWN ARE APPROXIMATE.

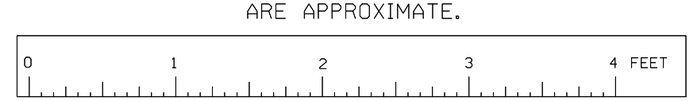

SCALE: 1.5 INCHES = 1 FOOT

SALEM, ILLINOIS
TR-293 (CHURCH ROAD)
M.P. 257.50
MT. VERNON SUBDIVISION
D.O.T.#167 764G

Revised: 08-10-2010
INSTALLED FLS/GATES & CONSTANT WARNING AT CHURCH ROAD. M.P. 257.50
Req#: 17111 WO#: 44520
IS:07-12-2010 RLT
MJD/WIT/CTC/JNM

MODIFICATION LEVEL	
Q.A. LAST LEVEL CHECKED	D0
LAST LEVEL MOD THIS TYPICAL	D0
LAST LEVEL BY DESIGNER	D0
CHANGED FROM TYPICAL?	Y

REV 09.01.06 4K GFC.9

UNION PACIFIC
QUALITY PRODUCTIVITY SAFETY
SIGNAL DESIGN

DES:	CTC
DIG:	CTC
CHK:	RLT
A.F.E.	44520
ID= 030125750.8X	

UNION PACIFIC RAILROAD

SALEM, ILLINOIS
TO CHAP, ILLINOIS
C.T.C. CIRCUITS

Office of Sr.AVP Engineering - Signal/TCO Omaha, Nebraska

DATE 02-20-04
SHEET 8
DWG 257.50
S-301