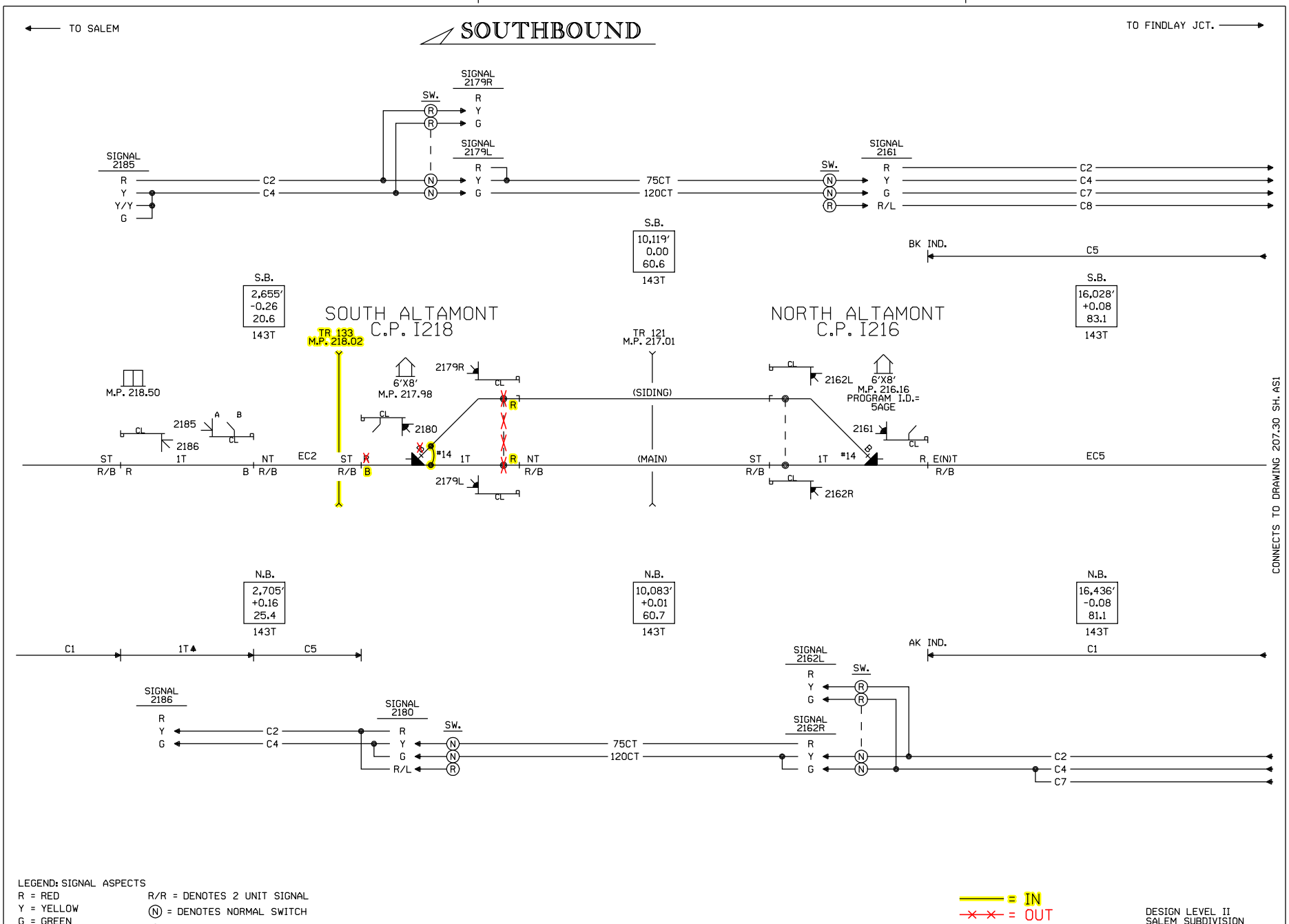

LEGEND: SIGNAL ASPECTS

R = RED
Y = YELLOW
G = GREEN
L = LUNAR

R/R = DENOTES 2 UNIT SIGNAL
(N) = DENOTES NORMAL SWITCH
(R) = DENOTES REVERSE SWITCH

= IN
= OUT

DESIGN LEVEL II
SALEM SUBDIVISION
ASPECT CHART
M.P. 216.16 TO 218.50
DESIGN SPEED: 60 M.P.H.

Designed: 12/15/11 INSTALL FLASHERS, GATES AND CWT AT TR 133, M.P. 218.02 Rec#: WO#: 11997 IS: /JPW /NST/JTB	REV. 11-26-08 INSTALLED FLS/GTS & CONSTANT WARNING AT TR 121, M.P. 217.01 W.O.# 57016 REC.# 15379 8-11-08 RLT THB/WITT/CTC/RDD	REV. 7-7-06 INSTALLED EC5 FROM S.E. CLARKSBURG (M.P. 199.79) TO N.E. ALTAMONT (M.P. 216.16) W.O. #55245 REC. #14009 6-5-06 JJL RCE/WITT/CTC/GWS	UNION PACIFIC QUALITY PRODUCTIVITY SAFETY SIGNAL DESIGN	DES: CTC DIG: CTC CHK: RLL/JJL A.F.E. 55245 ID= 030121800.AS1

UNION PACIFIC RAILROAD
FINDLAY JCT., ILLINOIS
TO SALEM, ILLINOIS
C.T.C. CIRCUITS
Office of Sr.AVP Engineering - Signal/TCO Omaha, Nebraska

DATE 03-02-06
SHEET AS1
DWG 218.00
S-301

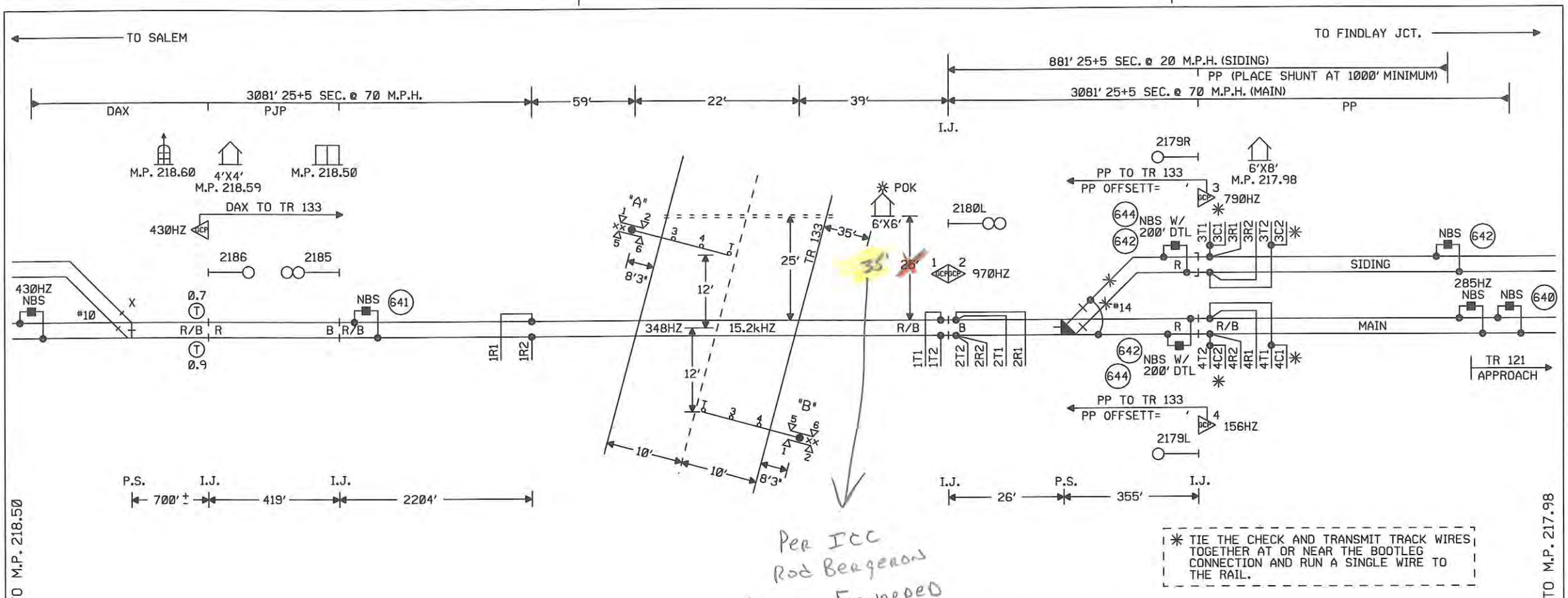

Per ICC
Rod Bergeron
Change Forwarded
To MSC Stearns
7/12/12
JTB

✳ TIE THE CHECK AND TRANSMIT TRACK WIRES TOGETHER AT OR NEAR THE BOOTLEG CONNECTION AND RUN A SINGLE WIRE TO THE RAIL.

NOTES:

⊗ = TWISTED WIRES
INSULATED 1 TWIST PER FT.
ALL TRACK WIRES 2C. #6

TRANSMITTER AND RECEIVER LEADS TO BE SEPARATED BY AT LEAST 12" IN TRENCH, LENGTHS SHOULD NOT EXCEED MANUFACTURES RECOMMENDATION.

TOP OF FOUNDATION TO BE AT SAME ELEVATION AS THE SURFACE OF THE TRAVELED WAY & NO MORE THAN 4" ABOVE THE SURFACE OF THE GROUND.

ALL BUNGALOW WIRING TO BE #16 AWG FLEX UNLESS OTHERWISE SPECIFIED EXCEPT ALL GROUND WIRE TO BE #6 AWG FLEX OR LARGER.

ALL WIRING IN GATE MECHANISM TO BE #10 "AWG FLEX".

REFER TO UP STANDARD DWG FOR BUNGALOW GROUNDING.

PORTABLE GENERATOR EXTENSION CORD FOR 240V TO 240V IS PROVIDED AS WELL AS A 120V TO 240V ADAPTER.

ALL LIGHTS TO BE 12" ROUNDELS.

= = = = = = 4" X 40' CONDUIT

LIGHTS: LED LIGHTS

GATE A: 18'
GATE B: 18'

xx = BELL

CONSTRUCTION NOTES:

1. INSTALL THE FOLLOWING EQUIPMENT AT M.P. 217.98 FOR OS TRACK CIRCUIT.
   (2) TAB 882 TRACK RELAYS.
   (1) TAB 706 TRACK CHOKE.
2. REUSE THE 1TC AT M.P. 217.98 FOR NEW OS TRACK CIRCUIT.
3. INSTALL THE REMOTE GCP AT M.P. 218.59 AS PART OF THIS PROJECT.
4. INSTALL (140) BONDS ON SIDING TRACK.
5. GATE PLACEMENT WAS BASED ON A 20' WIDE ROAD.
6. A MINIMUM 120' ISLAND NEEDS TO BE MAINTAINED.

X = REMOVE

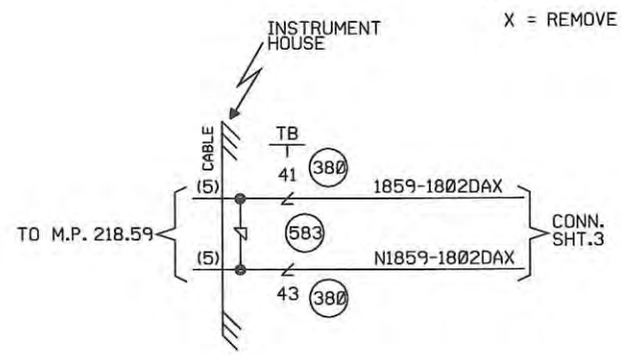

W(S) ◄——○——► E(N)

CABLE TABULATION

CABLE #5 7C#14 U.G.B.T. HOUSE TO MP. 218.59

NEW SHEET

Designed: 12/15/11 INSTALL FLASHERS, GATES AND CWT AT TR 133, M.P. 218.02	MODIFICATION LEVEL		UNION PACIFIC QUALITY PRODUCTIVITY SAFETY SIGNAL DESIGN	Date: 12/15/11	UNION PACIFIC RAILROAD	Sh.: 1
	Q. A. LAST LEVEL CHECKED	DU		Des: NST	ALTAMONT, ILLINOIS	DOT 424040V
	LAST LEVEL MOD THIS TYPICAL	DU		Chk: JPW	TR 133	MP: 218.02
Rec#: WO#: 11997 IS: /JPW /NST/JTB	LAST LEVEL BY DESIGNER	DU		AFE: 11997	SALEM SUBDIVISION	ID: 030121802.1X
	CHANGED FROM TYPICAL? REV 01.24.11 4K 2TKUGTYP.1	Y			Office of Sr AVP Engineering - Signal/TCO Omaha, Nebraska	

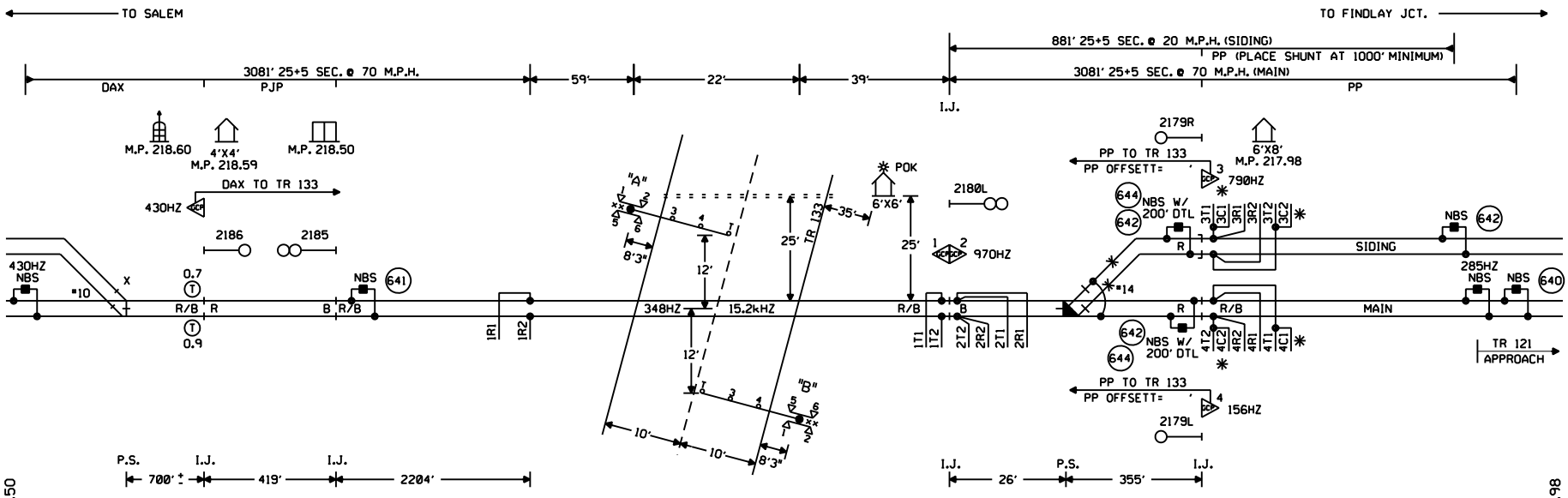

CONNECTS TO M.P. 218.50

CONNECTS TO M.P. 217.98

✱ TIE THE CHECK AND TRANSMIT TRACK WIRES TOGETHER AT OR NEAR THE BOOTLEG CONNECTION AND RUN A SINGLE WIRE TO THE RAIL.

NOTES:

⊗ = TWISTED WIRES
INSULATED 1 TWIST PER FT.
ALL TRACK WIRES 2C. #6

TRANSMITTER AND RECEIVER LEADS TO BE SEPARATED BY AT LEAST 12" IN TRENCH, LENGTHS SHOULD NOT EXCEED MANUFACTURES RECOMMENDATION.

TOP OF FOUNDATION TO BE AT SAME ELEVATION AS THE SURFACE OF THE TRAVELED WAY & NO MORE THAN 4" ABOVE THE SURFACE OF THE GROUND.

ALL BUNGALOW WIRING TO BE #16 AWG FLEX UNLESS OTHERWISE SPECIFIED EXCEPT ALL GROUND WIRE TO BE #6 AWG FLEX OR LARGER.

ALL WIRING IN GATE MECHANISM TO BE #10 "AWG FLEX".

REFER TO UP STANDARD DWG FOR BUNGALOW GROUNDING.

PORTABLE GENERATOR EXTENSION CORD FOR 240V TO 240V IS PROVIDED AS WELL AS A 120V TO 240V ADAPTER.

ALL LIGHTS TO BE 12" ROUNDELS.

= = = = = = 4" X 40' CONDUIT

LIGHTS: LED LIGHTS

GATE A: 18'
GATE B: 18'

xx = BELL

CONSTRUCTION NOTES:

1. INSTALL THE FOLLOWING EQUIPMENT AT M.P. 217.98 FOR OS TRACK CIRCUIT.
   (2) TAB 882 TRACK RELAYS.
   (1) TAB 706 TRACK CHOKE.
2. REUSE THE 1TC AT M.P. 217.98 FOR NEW OS TRACK CIRCUIT.
3. INSTALL THE REMOTE GCP AT M.P. 218.59 AS PART OF THIS PROJECT.
4. INSTALL (140) BONDS ON SIDING TRACK.
5. GATE PLACEMENT WAS BASED ON A 20' WIDE ROAD.
6. A MINIMUM 120' ISLAND NEEDS TO BE MAINTAINED.

X = REMOVE

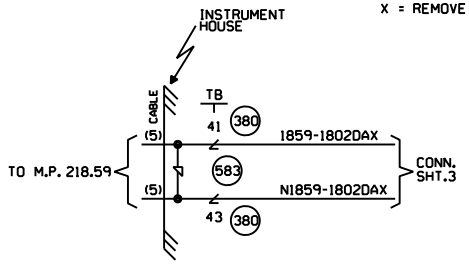

W(S) ←—○—→ E(N)

CABLE TABULATION

CABLE #5 7C#14 U.G.B.T. HOUSE TO MP. 218.59

NEW SHEET

Designed: 12/15/11 INSTALL FLASHERS, GATES AND CWT AT TR 133, M.P. 218.02 Rec#: 15: WO#: 11997 /JPW /NST/JTB	MODIFICATION LEVEL		UNION PACIFIC QUALITY PRODUCTIVITY SAFETY SIGNAL DESIGN	Date: 12/15/11	UNION PACIFIC RAILROAD	Sh.: 1
	Q. A. LAST LEVEL CHECKED	DU		Des: NST	ALTAMONT, ILLINOIS	DOT 424040V
	LAST LEVEL MOD THIS TYPICAL	DU		Chk: JPW	TR 133	MP: 218.02
	LAST LEVEL BY DESIGNER	DU		AFE: 11997	SALEM SUBDIVISION	ID: 030121802.1X
	CHANGED FROM TYPICAL?	Y			Office of Sr AVP Engineering - Signal/TCO Omaha, Nebraska	
	REV 01.24.11 4K 2TKUGTYP.1					

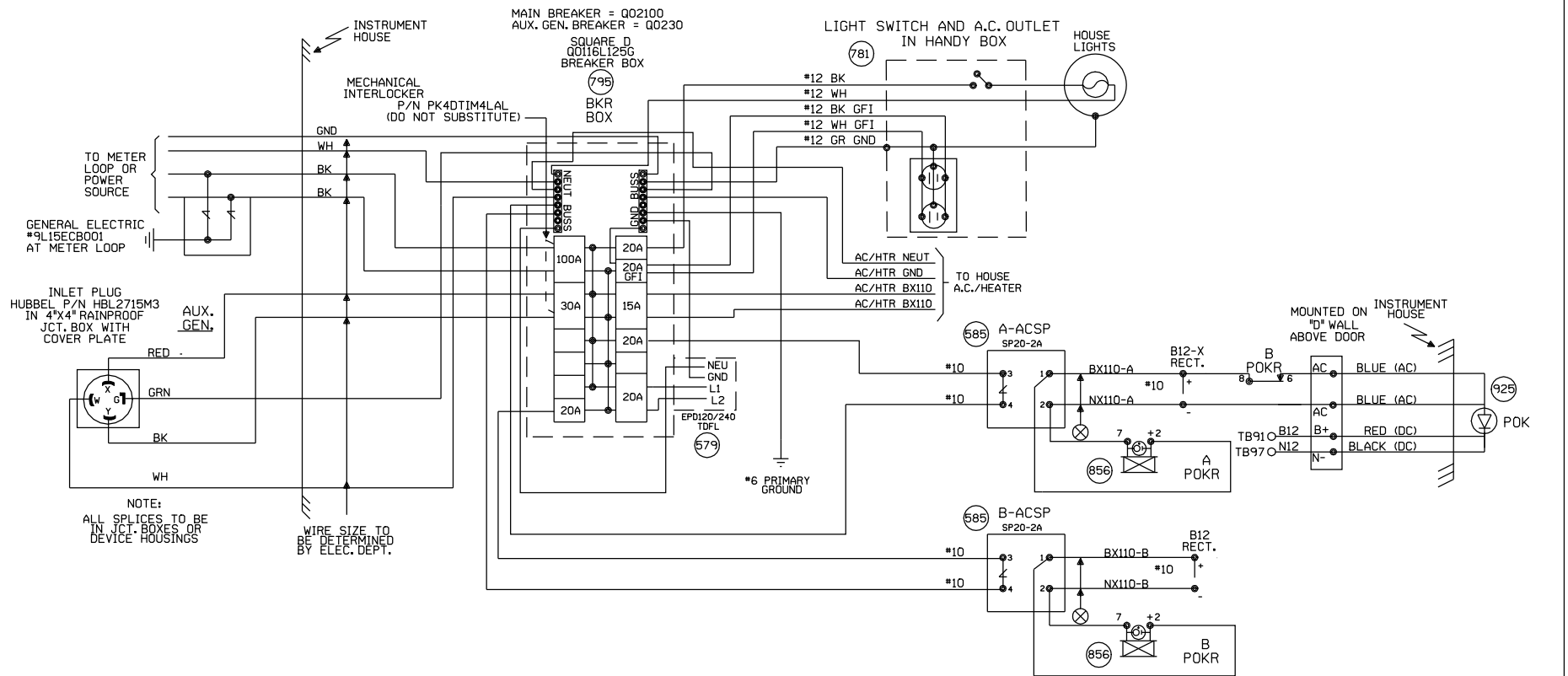

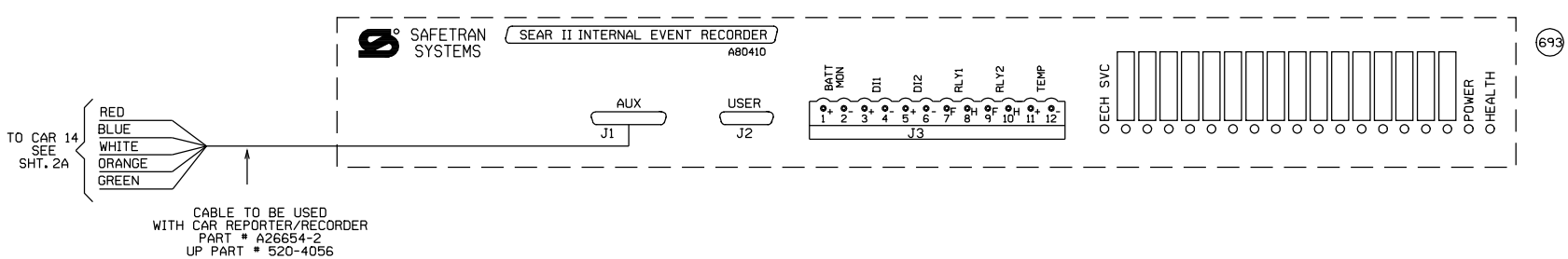

NEW SHEET

					Designed: 12/15/11 INSTALL FLASHERS, GATES AND CWT AT TR 133, M.P. 218.02 Rec#: WO#: 11997 IS: /JPW /NST/JTB	MODIFICATION LEVEL		UNION PACIFIC QUALITY PRODUCTIVITY SAFETY SIGNAL DESIGN	Date: 12/15/11 Des: NST Chk: JPW AFE: 11997	UNION PACIFIC RAILROAD ALTAMONT, ILLINOIS TR 133 SALEM SUBDIVISION Office of Sr AVP Engineering - Signal/TCO Omaha, Nebraska	Sh.: 2 DOT 424040V MP: 218.02 ID: 030121802.2X
						Q.A. LAST LEVEL CHECKED	DU				
						LAST LEVEL MOD THIS TYPICAL	DU				
						LAST LEVEL BY DESIGNER	DU				
						CHANGED FROM TYPICAL?	Y				
						REV 01.24.11 4K SEARAC.2					

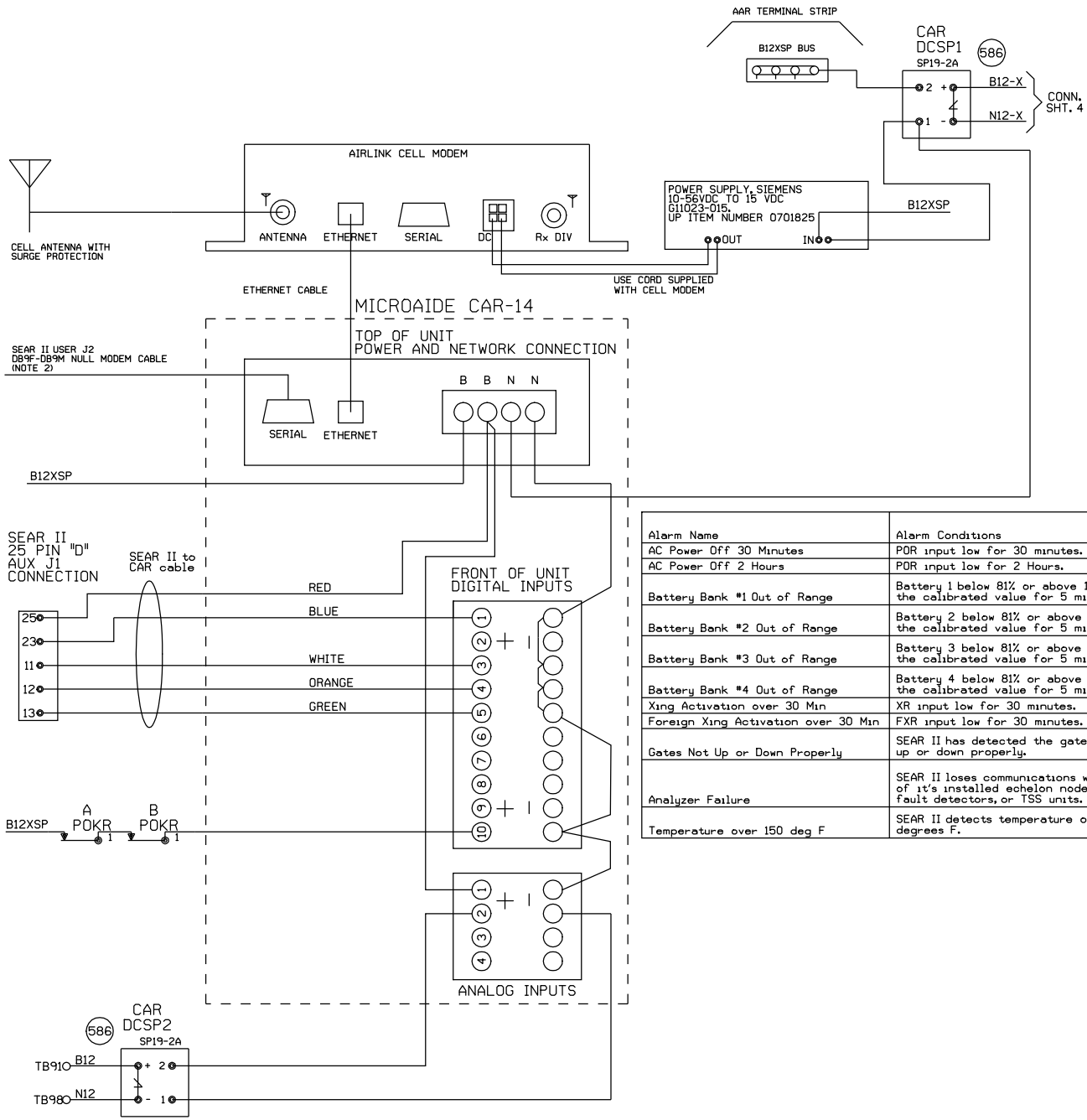

NOTE:
1) DO NOT JUMPER UNUSED INPUTS
2) THE CAR14 SERIAL PORT IS AVAILABLE TO ADD REMOTE CONNECTIVITY TO EXISTING LOGGING EQUIPMENT. USE NULL MODEM CABLE WITH SHIELDING DISCONNECTED AT ONE OR BOTH SIDES.

ANALOG INPUTS:
A1) B12X BATTERY BANK
A2) B12 BATTERY BANK
A3) BATTERY BANK 3
A4) BATTERY BANK 4

DIGITAL INPUTS
D1) XR (BLUE WIRE)
D2) FOREIGN XR
D3) ANALYZER FAILURE (WHITE WIRE)
D4) HIGH TEMPERATURE (ORANGE WIRE)
D5) GATES NOT UP OR DOWN PROPERLY (GREEN WIRE)
D10) POWER OFF INDICATION

Alarm Name	Alarm Conditions	Alarm Clearing Conditions	Cleared by Maintainer Mode?
AC Power Off 30 Minutes	POR input low for 30 minutes.	POR input high for 5 minutes.	No
AC Power Off 2 Hours	POR input low for 2 Hours.	POR input high for 5 minutes.	No
Battery Bank #1 Out of Range	Battery 1 below 81% or above 120% of the calibrated value for 5 minutes.	Battery 1 within acceptable range for 5 minutes.	No
Battery Bank #2 Out of Range	Battery 2 below 81% or above 120% of the calibrated value for 5 minutes.	Battery 2 within acceptable range for 5 minutes.	No
Battery Bank #3 Out of Range	Battery 3 below 81% or above 120% of the calibrated value for 5 minutes.	Battery 3 within acceptable range for 5 minutes.	No
Battery Bank #4 Out of Range	Battery 4 below 81% or above 120% of the calibrated value for 5 minutes.	Battery 4 within acceptable range for 5 minutes.	No
Xing Activation over 30 Min	XR input low for 30 minutes.	XR input high for 10 seconds.	Yes
Foreign Xing Activation over 30 Min	FXR input low for 30 minutes.	FXR input high for 10 seconds.	Yes
Gates Not Up or Down Properly	SEAR II has detected the gates are not up or down properly.	SEAR II has detected the gates are up or down properly.	No
Analyzer Failure	SEAR II loses communications with any of it's installed echelon nodes, ground fault detectors, or TSS units.	SEAR II has recovered after an analyzer failure alarm.	No
Temperature over 150 deg F	SEAR II detects temperature over 150 degrees F.	SEAR II sensor detects temperature is OK after a High-Temp alarm.	No

NEW SHEET

Designed: 12/15/11
INSTALL FLASHERS, GATES AND CWT AT TR 133, M.P. 218.02
Rec'd: ISs: WO#: 11997 /JPW /NST/JTB

MODIFICATION LEVEL	
Q. A. LAST LEVEL CHECKED	DU
LAST LEVEL MOD THIS TYPICAL	DU
LAST LEVEL BY DESIGNER	DU
CHANGED FROM TYPICAL?	Y
rev 01.24.11 4K ACDCCAR14SI1.3	

UNION PACIFIC
QUALITY PRODUCTIVITY SAFETY
SIGNAL DESIGN

Date: 12/15/11
Des: NST
Chk: JPW
AFE: 11997

UNION PACIFIC RAILROAD

ALTAMONT, ILLINOIS
TR 133
SALEM SUBDIVISION

Office of Sr AVP Engineering - Signal/TCO Omaha, Nebraska

Sh.: 2A
DOT 424040V
MP: 218.02
ID: 030121802.2AX

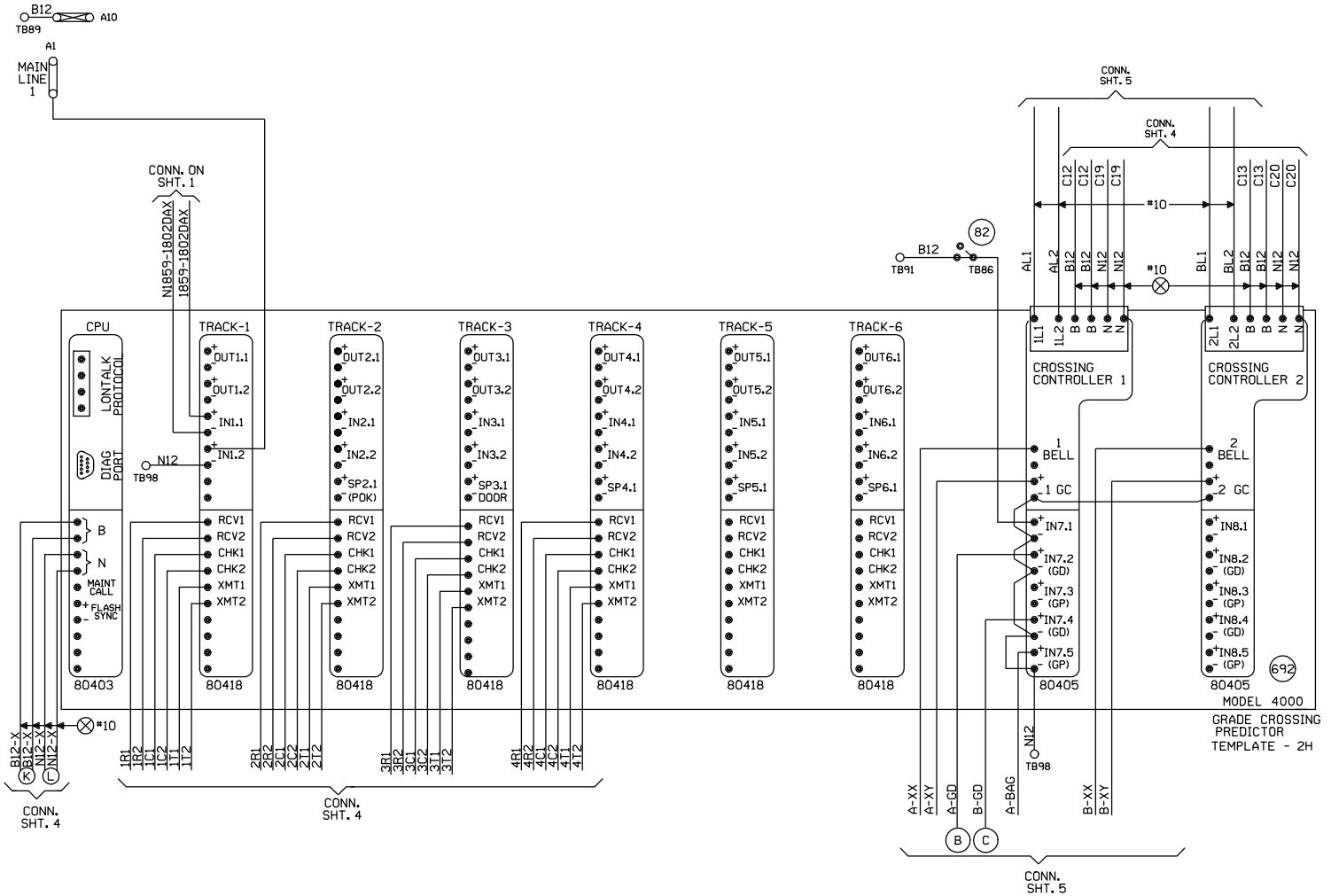

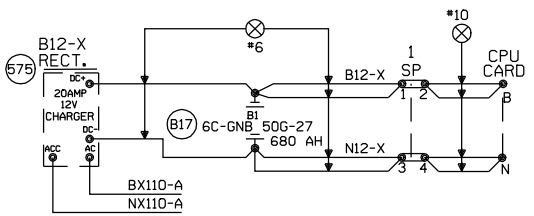

"Mf" FREQUENCY (HZ)	MAXIMUM TRANSMIT WIRE LENGTH (FEET)
86	100
114	125
156	150
211	200
285-970	250

NOTE:
EACH TRANSMITTER TO RAIL WIRE FROM XMT1 AND XMT2 MUST NOT EXCEED THE MAXIMUM LENGTH SPECIFIED IN THE TABLE SHOWN. THE RECEIVER WIRE LENGTH IS NOT CRITICAL. DOES NOT APPLY TO 6 TRACK WIRE APPLICATION.

NEW SHEET

Designed: 12/15/11
INSTALL FLASHERS, GATES AND CWT AT TR 133, M.P. 218.02
Rec#: WO#: 11997
IS: /JPW /NST/JTB

MODIFICATION LEVEL	
Q. A. LAST LEVEL CHECKED	DU
LAST LEVEL MOD THIS TYPICAL	DU
LAST LEVEL BY DESIGNER	DU
CHANGED FROM TYPICAL?	Y
rev 01.24.11 4K 4TKB4GF.3	

UNION PACIFIC
QUALITY PRODUCTIVITY SAFETY
SIGNAL DESIGN

Date: 12/15/11
Des: NST
Chk: JPW
AFE: 11997

UNION PACIFIC RAILROAD

ALTAMONT, ILLINOIS
TR 133
SALEM SUBDIVISION

Office of Sr AVP Engineering - Signal/TCO Omaha, Nebraska

Sh.: 3
DOT 424040V
MP: 218.02
ID: 030121802.3X

Minimum Program Steps Report

Location and SIN

DOT Number: 424040V
Milepost Number: 218.02
Site Name: ALTAMONT, IL

SIN: 762010010016 *

* Parameter is part of office check number calculation.

MCF and Template Selection

MCF Name: GCP-T6X-02-4.mcf
MCF Revision: 24
MCFCRC: 09FC363B

Template = 2H:2 Uni pairs, 4 Rem (OCCN) *

* Parameter is part of office check number calculation.

Minimum Program Steps

TEMPLATE: module configuration
Track 5/RIO 2 Slot = Not Used (OCCN) *

TEMPLATE: track 1-Uni, Island
Track 1 : GCP Frequency = 348 Hz (Field,TCN)
Track 1 : Approach Distance = 2204 ft (Set in Field,TCN)
Track 1 : Prime Warning Time = 25 sec (OCCN) *
Track 1 : Prime UAX = IP (OCCN) *
Track 1 : Prime UAX Pickup = 15 sec (OCCN) *
Track 1 : GCP Transmit Level = Medium (Set in Field,TCN)
Track 1 : Isl Frequency = 15.2 kHz (Set in Field)
Track 1 : Island Distance = 120 ft (Set in Field,TCN)

TEMPLATE: track 2-Uni,No Island
Track 2 : GCP Frequency = 970 Hz (Field,TCN)
Track 2 : Approach Distance = 381 ft (Set in Field,TCN)
Track 2 : Prime Warning Time = 25 sec (OCCN) *
Track 2 : GCP Transmit Level = Medium (Set in Field,TCN)
Track 2 : Uni/Bi/Sim-Bidirnl = Sim. Bidirnl (OCCN) *

TEMPLATE: track 3-Remote Prime
Track 3 : GCP Frequency = 790 Hz (Field,TCN)
Track 3 : Approach Distance = 1000 ft (Set in Field,TCN)
Track 3 : Prime Warning Time = 25 sec (OCCN) *
Track 3 : Prime Offset Distance = 381 ft (Set in Field)
Track 3 : GCP Transmit Level = Medium (Set in Field,TCN)

TEMPLATE: track 4-Remote Prime
Track 4 : GCP Frequency = 156 Hz (Field,TCN)
Track 4 : Approach Distance = 2700 ft (Set in Field,TCN)
Track 4 : Prime Warning Time = 25 sec (OCCN) *
Track 4 : Prime Offset Distance = 381 ft (Set in Field)
Track 4 : GCP Transmit Level = Medium (Set in Field,TCN)

TEMPLATE: AND 1 XR
AND 1 Enable Used = Yes (OCCN) *

TEMPLATE: SSCC
SSCC 1 : Lamp Neutral Test = Off (Set in Field)
SSCC 2 : Lamp Neutral Test = Off (Set in Field)

TEMPLATE: OOS
OOS Control = OOS IPs (OCCN) *
T2 OOS Control = OOS Input 1 (OCCN) *
T3 OOS Control = None (OCCN) *
T4 OOS Control = None (OCCN) *

TEMPLATE: IP assignment 1
IN 1.1 = T1 Prime UAX (OCCN) *
IN 1.2 = Out Of Service IP 1 (OCCN) *

TEMPLATE: IP assignment SSCC
IN 7.1 = AND 1 XR Enable (OCCN) *

ADVANCED: site options
Daylight Savings = On (Set in Field)

* Parameter is part of office check number calculation.

Check Numbers

Office Check Number: 65BFB574
Config. Check Number: 71EAEBCB
(Based on MCF Revision 24)

Parameters not part of office check number calculation:

Track 1 : GCP Frequency = 348 Hz
Track 1 : Approach Distance = 2204 ft (Set in Field)
Track 1 : GCP Transmit Level = Medium (Set in Field)
Track 1 : Isl Frequency = 15.2 kHz
Track 1 : Island Distance = 120 ft (Set in Field)
Track 2 : GCP Frequency = 970 Hz
Track 2 : Approach Distance = 381 ft (Set in Field)
Track 2 : GCP Transmit Level = Medium (Set in Field)
Track 3 : GCP Frequency = 790 Hz
Track 3 : Approach Distance = 1000 ft (Set in Field)
Track 3 : Prime Offset Distance = 381 ft (Set in Field)
Track 3 : GCP Transmit Level = Medium (Set in Field)
Track 4 : GCP Frequency = 156 Hz
Track 4 : Approach Distance = 2700 ft (Set in Field)
Track 4 : Prime Offset Distance = 381 ft (Set in Field)
Track 4 : GCP Transmit Level = Medium (Set in Field)
SSCC 1 : Lamp Neutral Test = Off (Set in Field)
SSCC 2 : Lamp Neutral Test = Off (Set in Field)
Daylight Savings = On (Set in Field)

Comments

<none>

Configuration Package File

Filename: 030121802 424040V.pac
Path: H:\UP\XINGS\PROJECTS\21-315-0 (TR-133)\PAC Files\218.02\
Date/Time: 3/22/2012 6:27:01

NEW SHEET

Designed: 12/15/11
INSTALL FLASHERS, GATES AND CWT AT TR 133, M.P. 218.02
Req#: WO#: 11997
IS: /JPW / /NST/JTB

NOTE: Actual OFFSET and ISLAND distances must be verified by field personnel.

UNION PACIFIC
QUALITY PRODUCTIVITY SAFETY
SIGNAL DESIGN

Date:	12/15/11
Des:	NST
Chk:	JPW
AFE:	11997

UNION PACIFIC RAILROAD
ALTAMONT, ILLINOIS
TR 133
SALEM SUBDIVISION
Office of Sr AVP Engineering - Signal/TCO Omaha, Nebraska

Sh.:	3A
DOT	424040V
MP:	218.02
ID:	030121802.3AX

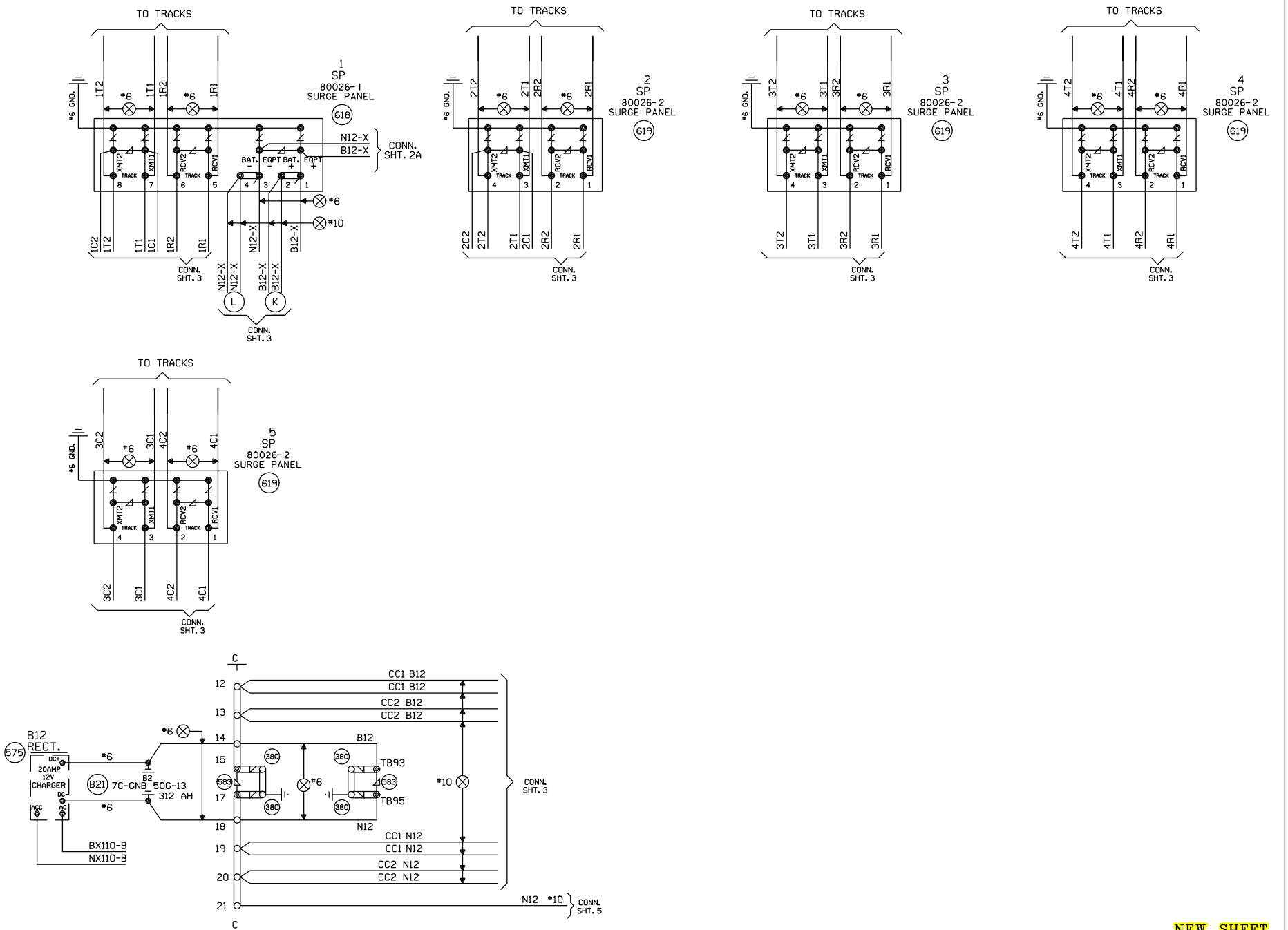

NEW SHEET

Designed: 12/15/11	MODIFICATION LEVEL		
INSTALL FLASHERS, GATES AND CWT AT TR 133, M.P. 218.02	Q. A. LAST LEVEL CHECKED	DU	
	LAST LEVEL MOD THIS TYPICAL	DU	
	LAST LEVEL BY DESIGNER	DU	
Rec#: WO#: 11997	CHANGED FROM TYPICAL?	Y	
IS: /JPW	rev 01.24.11 4K 4TKSPGFC.4		
/ /NST/JTB			

UNION PACIFIC
QUALITY PRODUCTIVITY SAFETY
SIGNAL DESIGN

Date:	12/15/11
Des:	NST
Chk:	JPW
AFE:	11997

UNION PACIFIC RAILROAD

ALTAMONT, ILLINOIS
TR 133
SALEM SUBDIVISION

Office of Sr AVP Engineering - Signal/TCO Omaha, Nebraska

Sh.:	4
DOT	424040V
MP:	218.02
ID:	030121802.4X

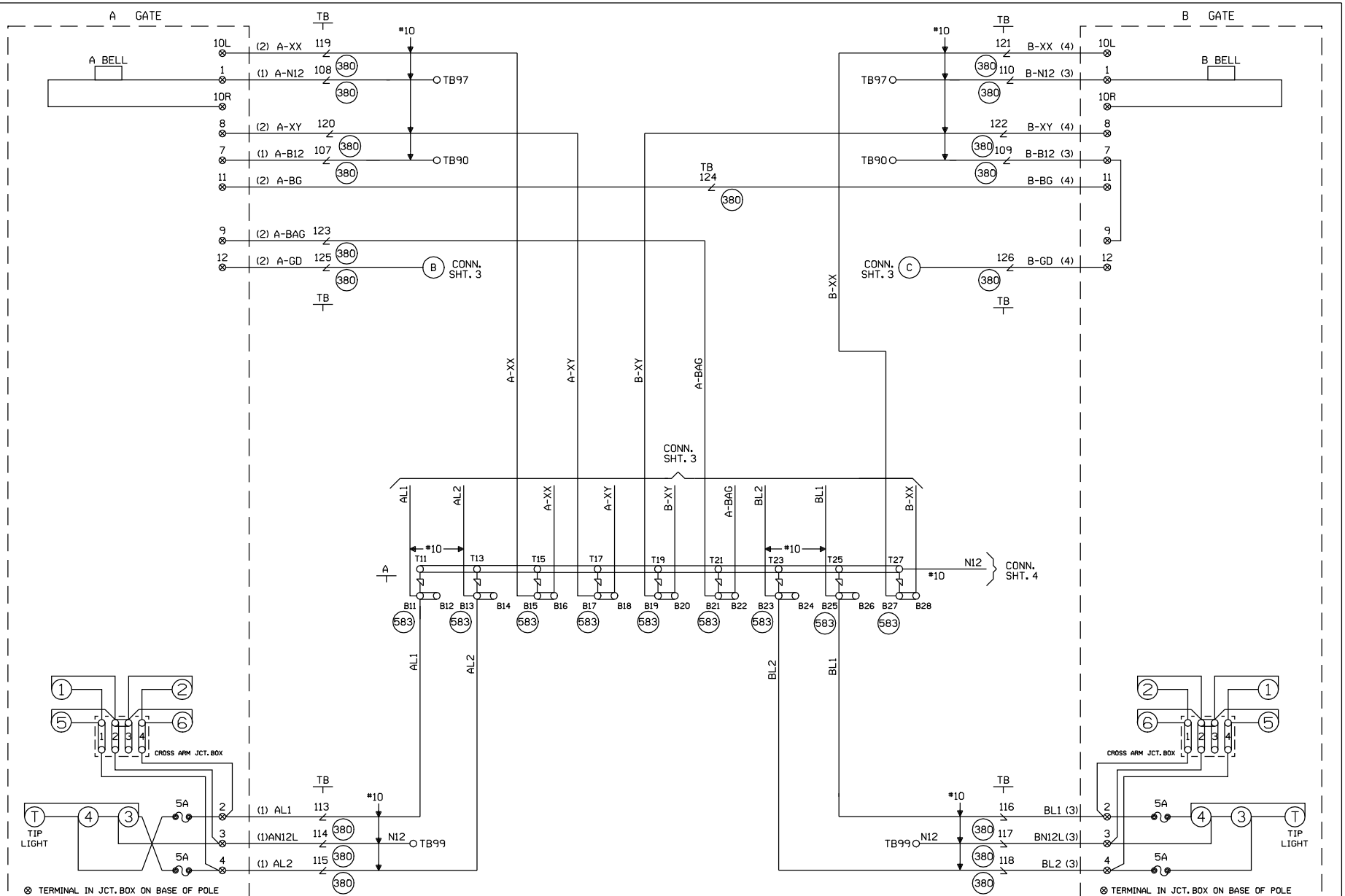

CABLE TABULATION

CABLE NO. 1 5C. NO.6 U.G.B.T. TO GATE A
CABLE NO. 2 7C. NO.14 U.G.B.T. TO GATE A
CABLE NO. 3 5C. NO.6 U.G.B.T. TO GATE B
CABLE NO. 4 7C. NO.14 U.G.B.T. TO GATE B

NEW SHEET

Designed: 12/15/11
INSTALL FLASHERS, GATES AND CWT AT TR 133, M.P. 218.02
Rec#: WO#: 11997
IS: /JPW /NST/JTB

MODIFICATION LEVEL	
Q. A. LAST LEVEL CHECKED	DU
LAST LEVEL MOD THIS TYPICAL	DU
LAST LEVEL BY DESIGNER	DU
CHANGED FROM TYPICAL?	Y

REV 01.24.11 4K GFCTYP.5

UNION PACIFIC
QUALITY PRODUCTIVITY SAFETY
SIGNAL DESIGN

Date: 12/15/11
Des: NST
Chk: JPW
AFE: 11997

UNION PACIFIC RAILROAD

ALTAMONT, ILLINOIS
TR 133
SALEM SUBDIVISION

Office of Sr AVP Engineering - Signal/TCO Omaha, Nebraska

Sh.: 5
DOT 424040V
MP: 218.02
ID: 030121802.5X

WCH 3593-E

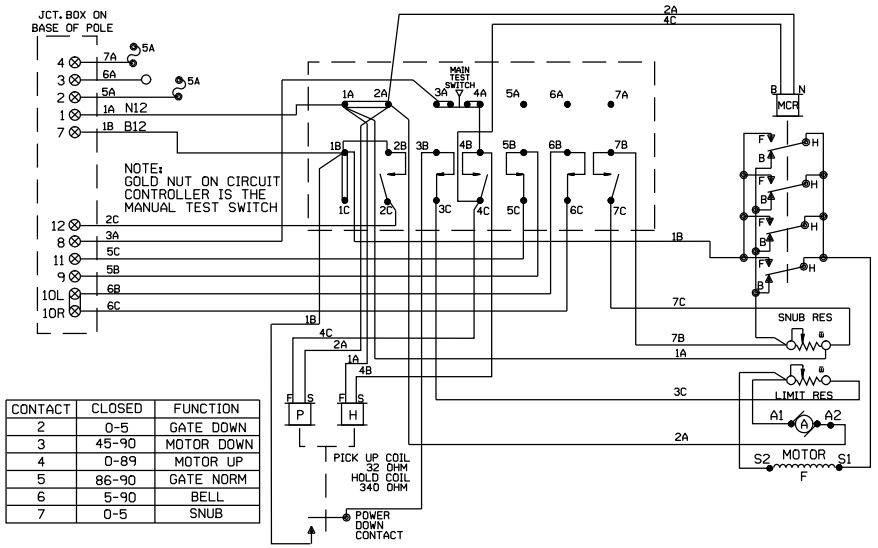

CONTACT	CLOSED	FUNCTION
2	0-5	GATE DOWN
3	45-90	MOTOR DOWN
4	0-89	MOTOR UP
5	86-90	GATE NORM
6	5-90	BELL
7	0-5	SNUB

WCH 3597-E

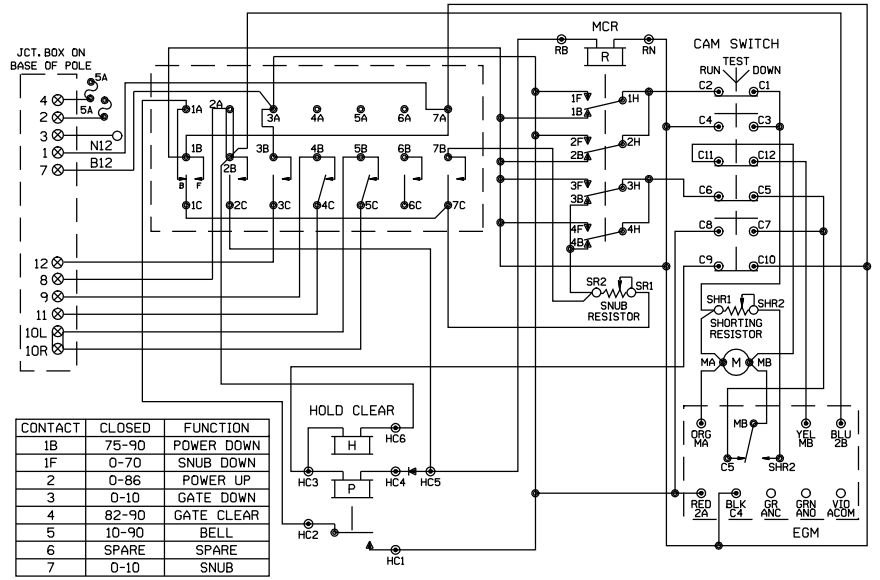

CONTACT	CLOSED	FUNCTION
1B	75-90	POWER DOWN
1F	0-70	SNUB DOWN
2	0-86	POWER UP
3	0-10	GATE DOWN
4	82-90	GATE CLEAR
5	10-90	BELL
6	SPARE	SPARE
7	0-10	SNUB

WCH 3597-RB

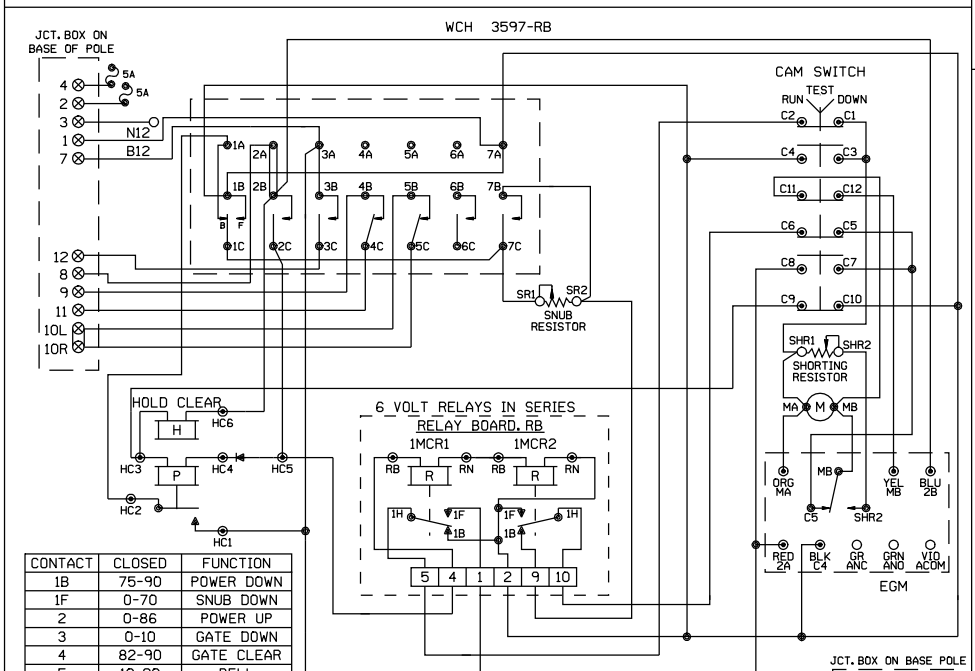

CONTACT	CLOSED	FUNCTION
1B	75-90	POWER DOWN
1F	0-70	SNUB DOWN
2	0-86	POWER UP
3	0-10	GATE DOWN
4	82-90	GATE CLEAR
5	10-90	BELL
6	SPARE	SPARE
7	0-10	SNUB

SHOW TYPE MECH. INSTALLED

ALL MECHANISMS SHOWN IN THE CLEAR POSITION

SAFETRAN S-60

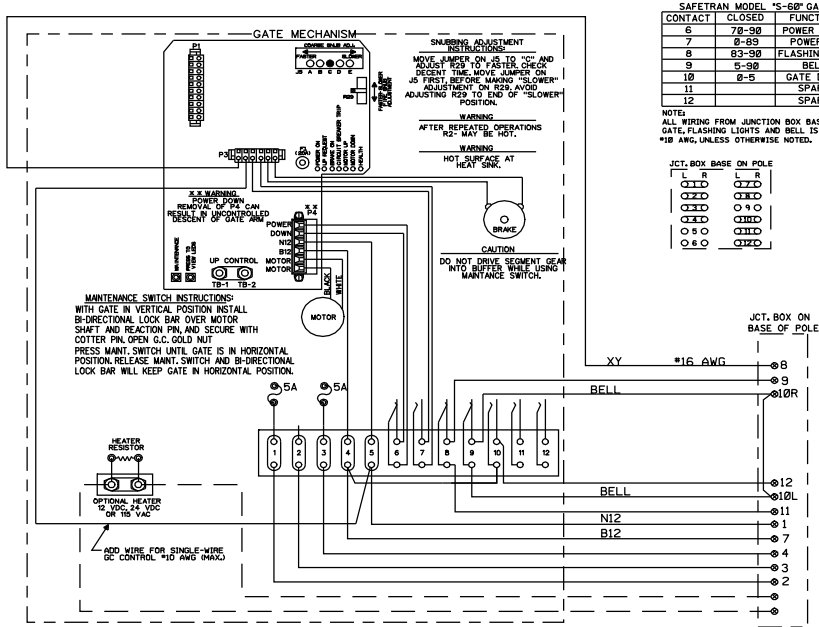

SAFETRAN MODEL "S-60" GATE

CONTACT	CLOSED	FUNCTION
6	70-90	POWER DOWN
7	0-89	POWER UP
8	83-90	FLASHING LGT.
9	5-90	BELL
10	0-5	GATE DOWN
11		SPARE
12		SPARE

NOTE: ALL WIRING FROM JUNCTION BOX BASE TO GATE, FLASHING LIGHTS AND BELL IS TO BE #10 AWG, UNLESS OTHERWISE NOTED.

JCT. BOX BASE ON POLE

NEW SHEET

Designed: 12/15/11

INSTALL FLASHERS, GATES AND CWT AT TR 133, M.P. 218.02

Rec#: ISs: WO#: 11997 /JPW /NST/JTB

MODIFICATION LEVEL	
Q. A. LAST LEVEL CHECKED	DU
LAST LEVEL MOD THIS TYPICAL	DU
LAST LEVEL BY DESIGNER	DU
CHANGED FROM TYPICAL?	N

rev 01.24.11 4K GWIRING.7

UNION PACIFIC SIGNAL DESIGN

Date: 12/15/11
Des: NST
Chk: JPW
AFE: 11997

UNION PACIFIC RAILROAD

ALTAMONT, ILLINOIS
TR 133
SALEM SUBDIVISION

Office of Sr AVP Engineering - Signal/TCO Omaha, Nebraska

Sh.: 6
DOT 424040V
MP: 218.02
ID: 030121802.6X

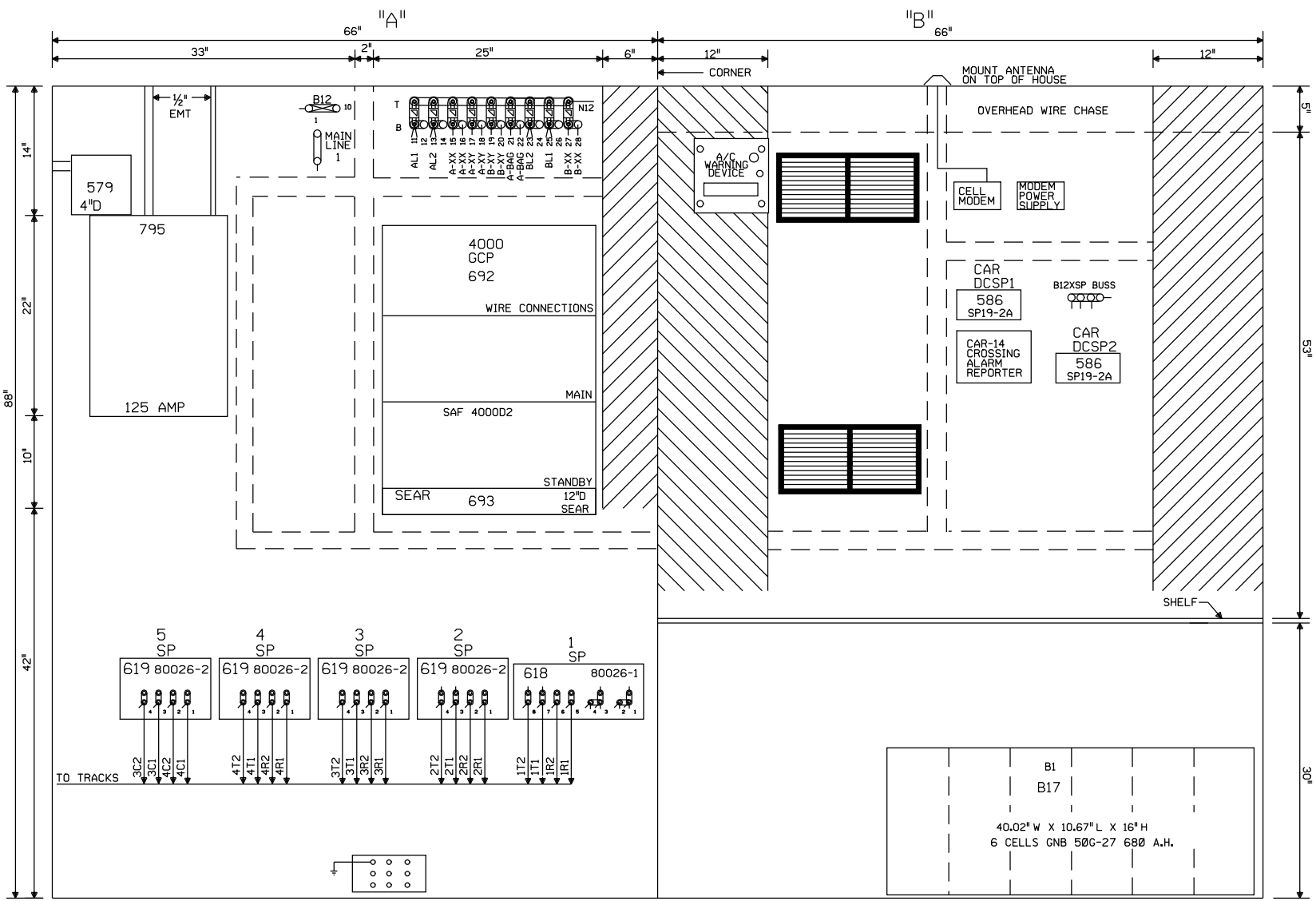

NOTE: ALL DIMENSIONS SHOWN ARE APPROXIMATE.

NEW SHEET

					Designed: 12/15/11 INSTALL FLASHERS, GATES AND CWT AT TR 133, M.P. 218.02 Rec#: WO#: 11997 IS: /JPW /NST/JTB	MODIFICATION LEVEL		UNION PACIFIC QUALITY PRODUCTIVITY SAFETY SIGNAL DESIGN	Date: 12/15/11 Des: NST Chk: JPW AFE: 11997	UNION PACIFIC RAILROAD ALTAMONT, ILLINOIS TR 133 SALEM SUBDIVISION Office of Sr AVP Engineering - Signal/TCO Omaha, Nebraska	Sh.: 7 DOT 424040V MP: 218.02 ID: 030121802.7X
						Q.A. LAST LEVEL CHECKED	DU				
						LAST LEVEL MOD THIS TYPICAL	DU				
						LAST LEVEL BY DESIGNER	DU				
						CHANGED FROM TYPICAL?	Y				
						REV 01.24.11 4K 4TKGFC.8					

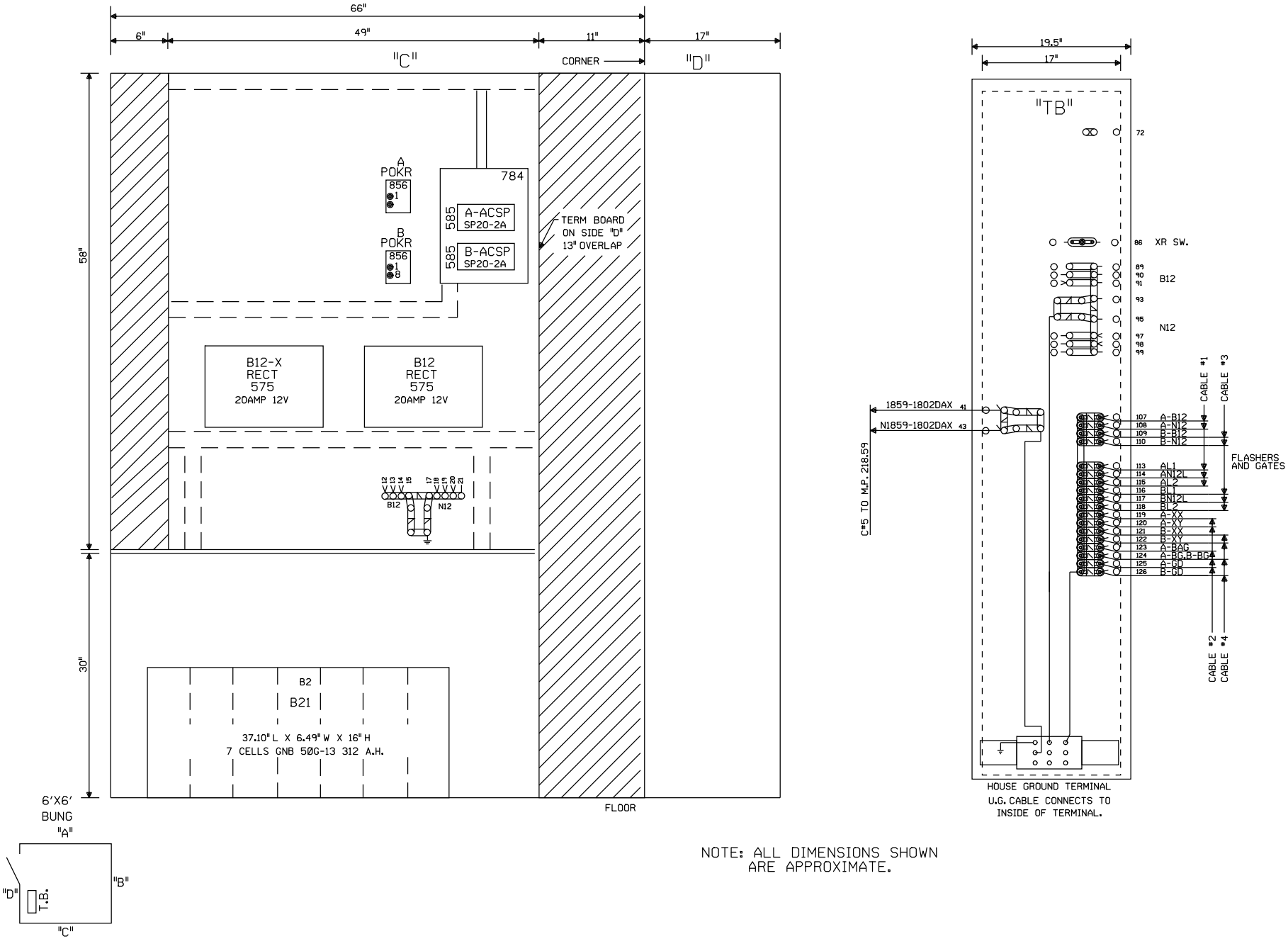

NOTE: ALL DIMENSIONS SHOWN
ARE APPROXIMATE.

NEW SHEET

Designed: 12/15/11 INSTALL FLASHERS, GATES AND CWT AT TR 133, M.P. 218.02 Rec#: WO#: 11997 IS: /JPW /NST/JTB	MODIFICATION LEVEL		UNION PACIFIC QUALITY PRODUCTIVITY SAFETY SIGNAL DESIGN	Date: 12/15/11 Des: NST Chk: JPW AFE: 11997	UNION PACIFIC RAILROAD ALTAMONT, ILLINOIS TR 133 SALEM SUBDIVISION Office of Sr AVP Engineering - Signal/TCO Omaha, Nebraska	Sh.: 8 DOT 424040V MP: 218.02 ID: 030121802.8X
	Q.A. LAST LEVEL CHECKED	DU				
	LAST LEVEL MOD THIS TYPICAL	DU				
	LAST LEVEL BY DESIGNER	DU				
	CHANGED FROM TYPICAL?	Y				
	REV 01.24.11 4K GFC.9					

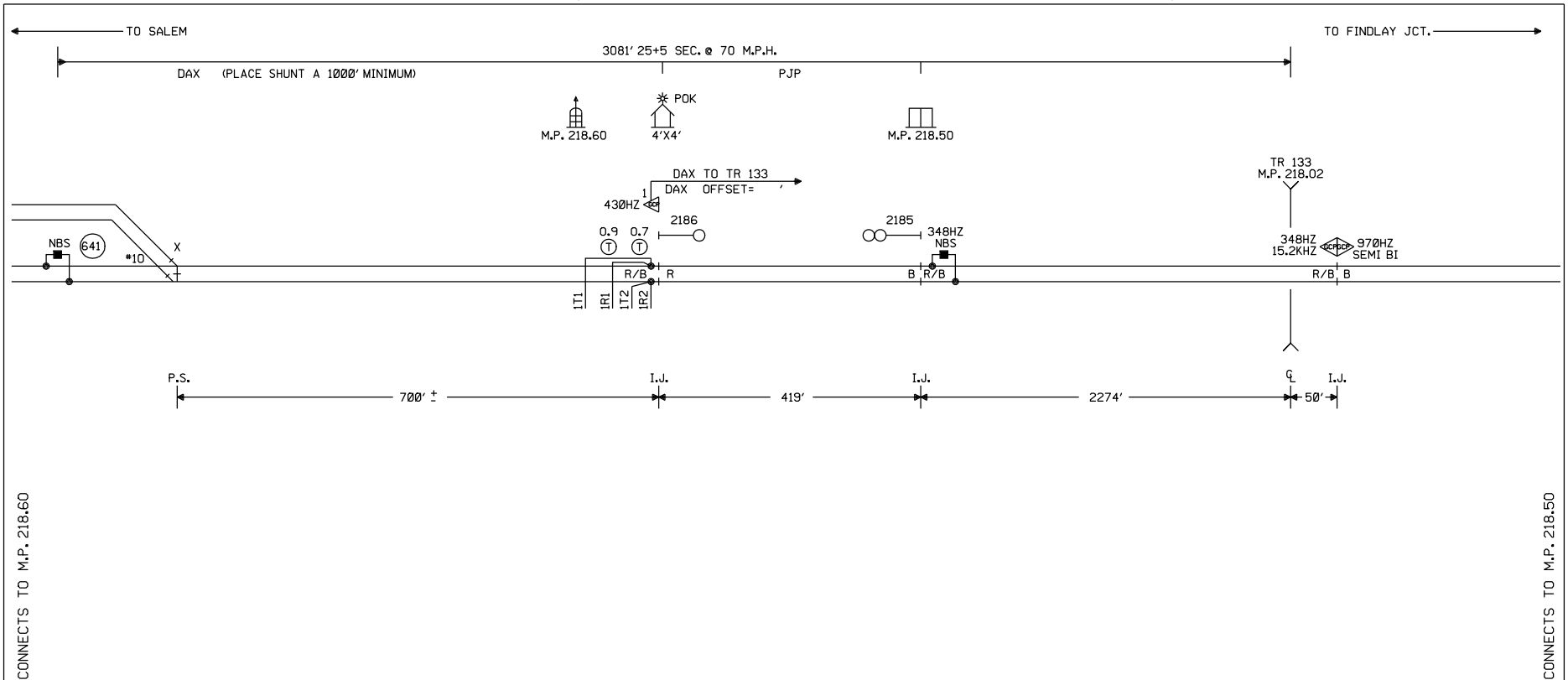

NOTES:

⊗ = TWISTED WIRES
ALL TRACK WIRES 2C. #6
INSULATED 1 TWIST PER FT.

TRANSMITTER AND RECEIVER LEADS TO BE SEPARATED BY AT LEAST 12" IN TRENCH, LENGTHS SHOULD NOT EXCEED MANUFACTURES RECOMMENDATION.

ALL BUNGALOW WIRING TO BE #16 AWG FLEX UNLESS OTHERWISE SPECIFIED EXCEPT ALL GROUND WIRE TO BE #6 AWG FLEX OR LARGER.

REFER TO UP STANDARD DWG. FOR BUNGALOW GROUNDING.

PORTABLE GENERATOR EXTENSION CORD FOR 240V TO 240V IS PROVIDED AS WELL AS A 120V TO 240V ADAPTER.

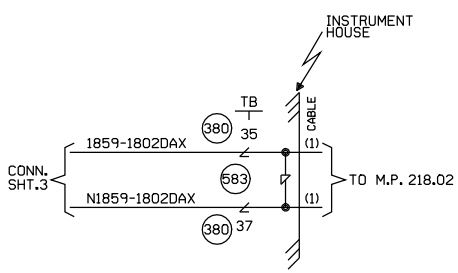

W(S) ←—○—→ E(N)

CABLE TABULATION

CABLE #1 7C#14 U.G.B.T. HOUSE TO MP. 218.02

NEW SHEET

					Designed: 12/15/11 INSTALL FLASHERS, GATES AND CWT AT TR 133, M.P. 218.02 Rec#: WO#: 11997 IS: /JPW /NST/JTB	MODIFICATION LEVEL		UNION PACIFIC QUALITY PRODUCTIVITY SAFETY SIGNAL DESIGN	Date: 12/15/11 Des: NST Chk: JPW AFE: 11997	UNION PACIFIC RAILROAD ALTAMONT, ILLINOIS REMOTE LOCATION SALEM SUBDIVISION Office of Sr AVP Engineering - Signal/TCO Omaha, Nebraska	Sh.: 1 DOT 000000R MP: 218.59 ID: 030121859.1X
						Q.A. LAST LEVEL CHECKED	DU				
						LAST LEVEL MOD THIS TYPICAL	DU				
						LAST LEVEL BY DESIGNER	DU				
						CHANGED FROM TYPICAL? REV 01.24.11 4K REMOTE.1	Y				

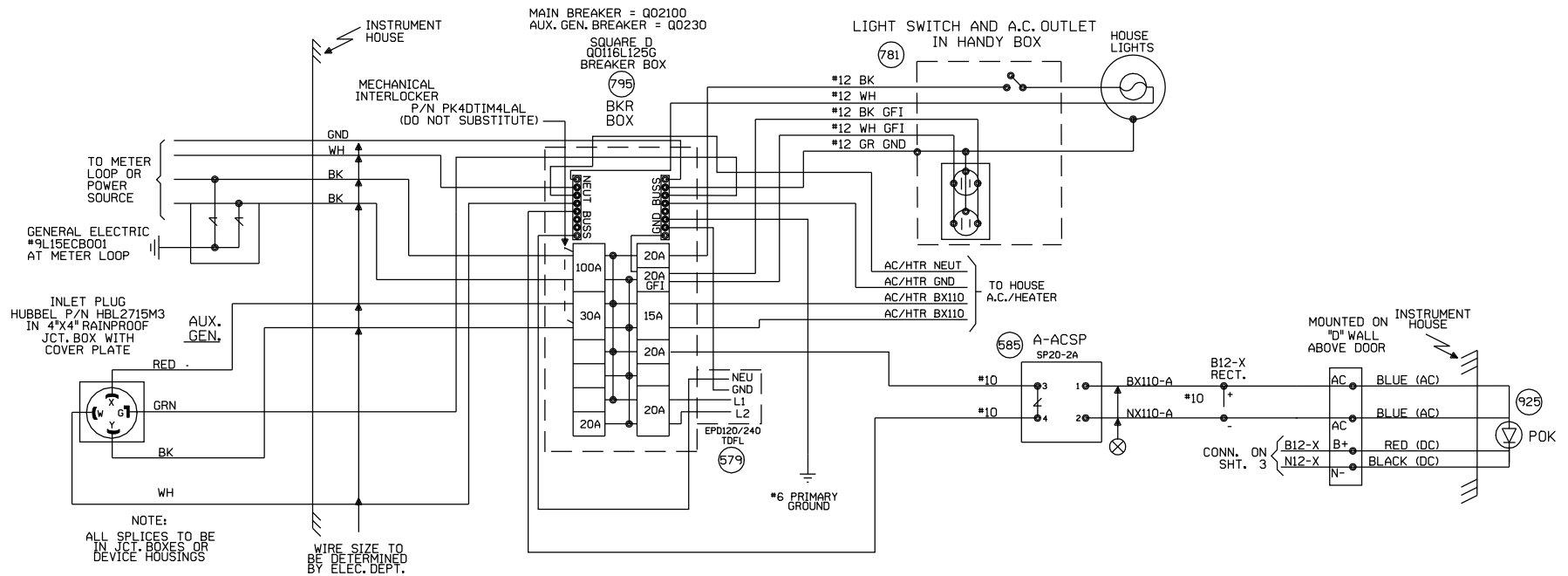

NEW SHEET

					Designed: 12/15/11 INSTALL FLASHERS, GATES AND CWT AT TR 133, M.P. 218.02 Rec#: WO#: 11997 IS: /JPW /NST/JTB	MODIFICATION LEVEL		UNION PACIFIC QUALITY PRODUCTIVITY SAFETY SIGNAL DESIGN	Date: 12/15/11 Des: NST Chk: JPW AFE: 11997	UNION PACIFIC RAILROAD ALTAMONT, ILLINOIS REMOTE LOCATION SALEM SUBDIVISION Office of Sr AVP Engineering - Signal/TCO Omaha, Nebraska	Sh.: 2 DOT 000000R MP: 218.59 ID: 030121859.2X
						Q.A. LAST LEVEL CHECKED	DU				
						LAST LEVEL MOD THIS TYPICAL	DU				
						LAST LEVEL BY DESIGNER	DU				
						CHANGED FROM TYPICAL? REV 01.24.11 4K SEARAC.2	Y				

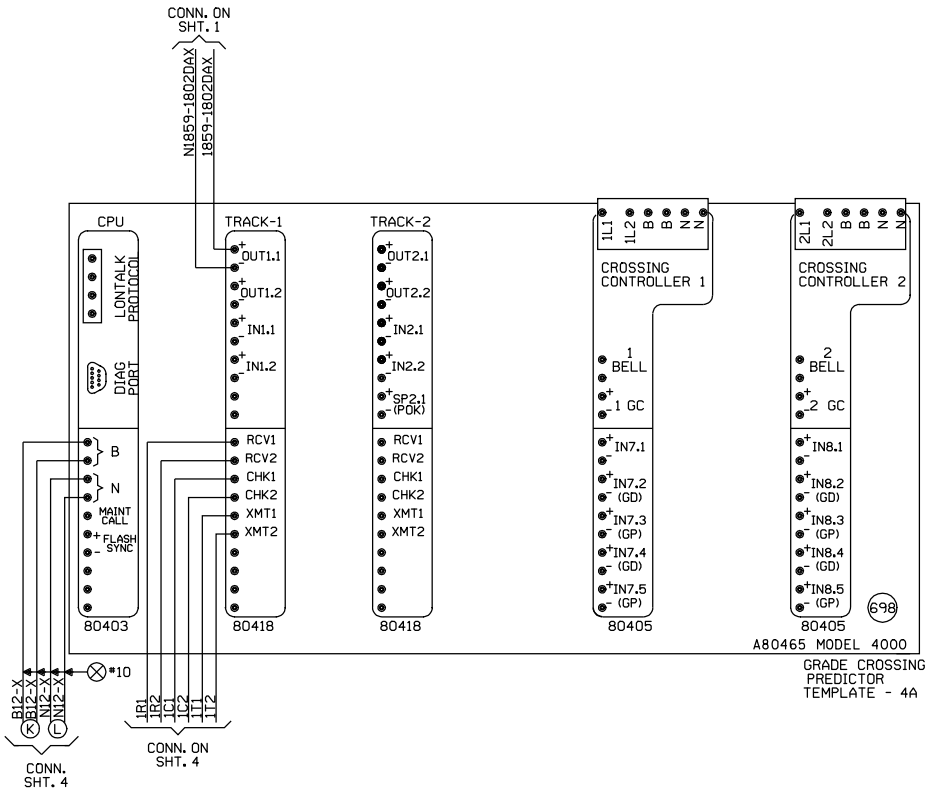

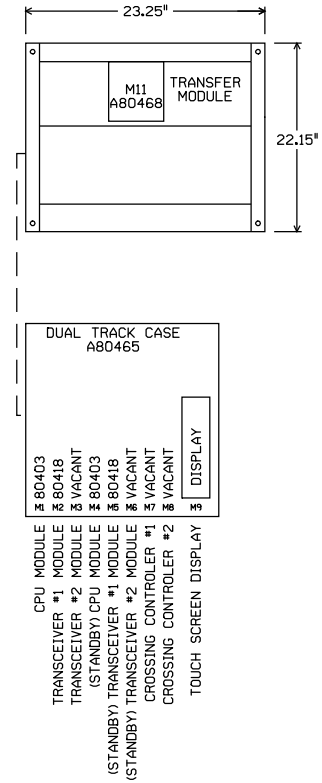

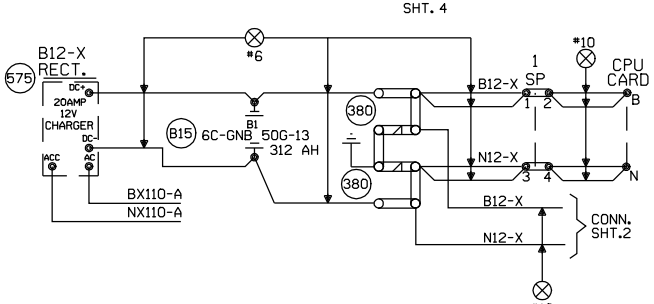

"Mf" FREQUENCY (HZ)	MAXIMUM TRANSMIT WIRE LENGTH (FEET)
86	100
114	125
156	150
211	200
285-970	250

NOTE:
EACH TRANSMITTER TO RAIL WIRE FROM XMT1 AND XMT2 MUST NOT EXCEED THE MAXIMUM LENGTH SPECIFIED IN THE TABLE SHOWN. THE RECEIVER WIRE LENGTH IS NOT CRITICAL. DOES NOT APPLY TO 6 TRACK WIRE APPLICATION.

NEW SHEET

Designed: 12/15/11
INSTALL FLASHERS, GATES AND CWT AT TR 133, M.P. 218.02
Rec#: WO#: 11997
IS: /JPW
/NST/JTB

MODIFICATION LEVEL	
Q. A. LAST LEVEL CHECKED	DU
LAST LEVEL MOD THIS TYPICAL	DU
LAST LEVEL BY DESIGNER	DU
CHANGED FROM TYPICAL?	Y

REV 01.24.11 4K 2TKGF.3

UNION PACIFIC
QUALITY PRODUCTIVITY SAFETY
SIGNAL DESIGN

Date: 12/15/11
Des: NST
Chk: JPW
AFE: 11997

UNION PACIFIC RAILROAD
ALTAMONT, ILLINOIS
REMOTE LOCATION
SALEM SUBDIVISION
Office of Sr AVP Engineering - Signal/TCO Omaha, Nebraska

Sh.: 3
DOT 000000R
MP: 218.59
ID: 030121859.3X

```
Minimum Program Steps Report
----------------------------

Location and SIN
----------------
DOT Number: 000000R
Milepost Number: 218.59
Site Name: ALTAMONT, IL

SIN: 762010010016 *

* Parameter is part of office check number calculation.

MCF and Template Selection
--------------------------
MCF Name: GCP-T6X-02-4.mcf
MCF Revision: 24
MCFCRC: 09FC363B

Template = 4A:6 Remotes (OCCN) *

* Parameter is part of office check number calculation.

Minimum Program Steps
---------------------
TEMPLATE:  track 1-Remote Dax
Track 1 : GCP Frequency = 430 Hz (Field,TCN)
Track 1 : Approach Distance = 1000 ft (Set in Field,TCN)
Track 1 : Dax A Warning Time = 25 sec (OCCN) *
Track 1 : Dax A Offset Distance = 2623 ft (Set in Field)
Track 1 : GCP Transmit Level = Medium (Set in Field,TCN)

TEMPLATE:  OOS
OOS Timeout = 1 hrs (Set in Field)

TEMPLATE:  OP assignment 1
OUT 1.1 = T1 Dax A (OCCN) *

ADVANCED:  site options
Daylight Savings = On (Set in Field)

* Parameter is part of office check number calculation.

Check Numbers
-------------
Office Check Number: 64BEC85A
Config. Check Number: 35701D8B
(Based on MCF Revision 24)

Parameters not part of office check number calculation:

Track 1 : GCP Frequency = 430 Hz
Track 1 : Approach Distance = 1000 ft (Set in Field)
Track 1 : Dax A Offset Distance = 2623 ft (Set in Field)
Track 1 : GCP Transmit Level = Medium (Set in Field)
OOS Timeout = 1 hrs (Set in Field)
Daylight Savings = On (Set in Field)

Comments
--------
<none>

Configuration Package File
--------------------------
Filename: 030121859 000000R.pac
Path: H:\UP\XINGS\PROJECTS\21-315-0 (TR-133)\PAC Files\218.59\
Date/Time: 4/17/2012 13:57:20
```

NEW SHEET

				Designed: 12/15/11 INSTALL FLASHERS, GATES AND CWT AT TR 133, M.P. 218.02 Req#: WO#: 11997 IS: /JPW / /NST/JTB	**NOTE: Actual OFFSET and ISLAND distances must be verified by field personnel.**	UNION PACIFIC QUALITY PRODUCTIVITY SAFETY SIGNAL DESIGN	Date: 12/15/11 Des: NST Chk: JPW AFE: 11997	UNION PACIFIC RAILROAD ALTAMONT, ILLINOIS REMOTE LOCATION SALEM SUBDIVISION Office of Sr AVP Engineering - Signal/TCO Omaha, Nebraska	Sh.: 3A DOT 000000R MP: 218.59 ID: 030121859.3AX

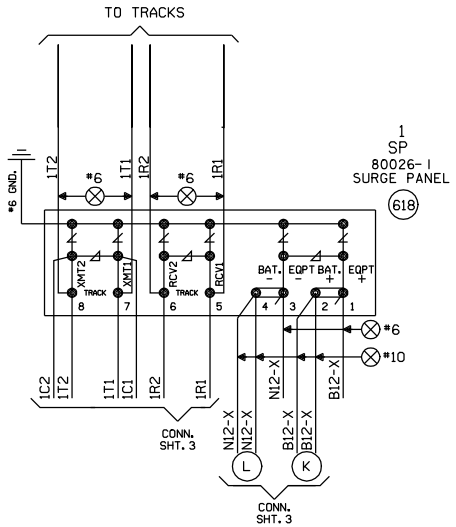

NEW SHEET

					Designed: 12/15/11 INSTALL FLASHERS, GATES AND CWT AT TR 133, M.P. 218.02 Rec#: WO#: 11997 IS: /JPW /NST/JTB	MODIFICATION LEVEL		UNION PACIFIC QUALITY PRODUCTIVITY SAFETY SIGNAL DESIGN	Date: 12/15/11 Des: NST Chk: JPW AFE: 11997	UNION PACIFIC RAILROAD ALTAMONT, ILLINOIS REMOTE LOCATION SALEM SUBDIVISION Office of Sr AVP Engineering - Signal/TCO Omaha, Nebraska	Sh.: 4 DOT 000000R MP: 218.59 ID: 030121859.4X
						Q. A. LAST LEVEL CHECKED	DU				
						LAST LEVEL MOD THIS TYPICAL	DU				
						LAST LEVEL BY DESIGNER	DU				
						CHANGED FROM TYPICAL? REV 01.24.11 4K REMOTE.4	Y				

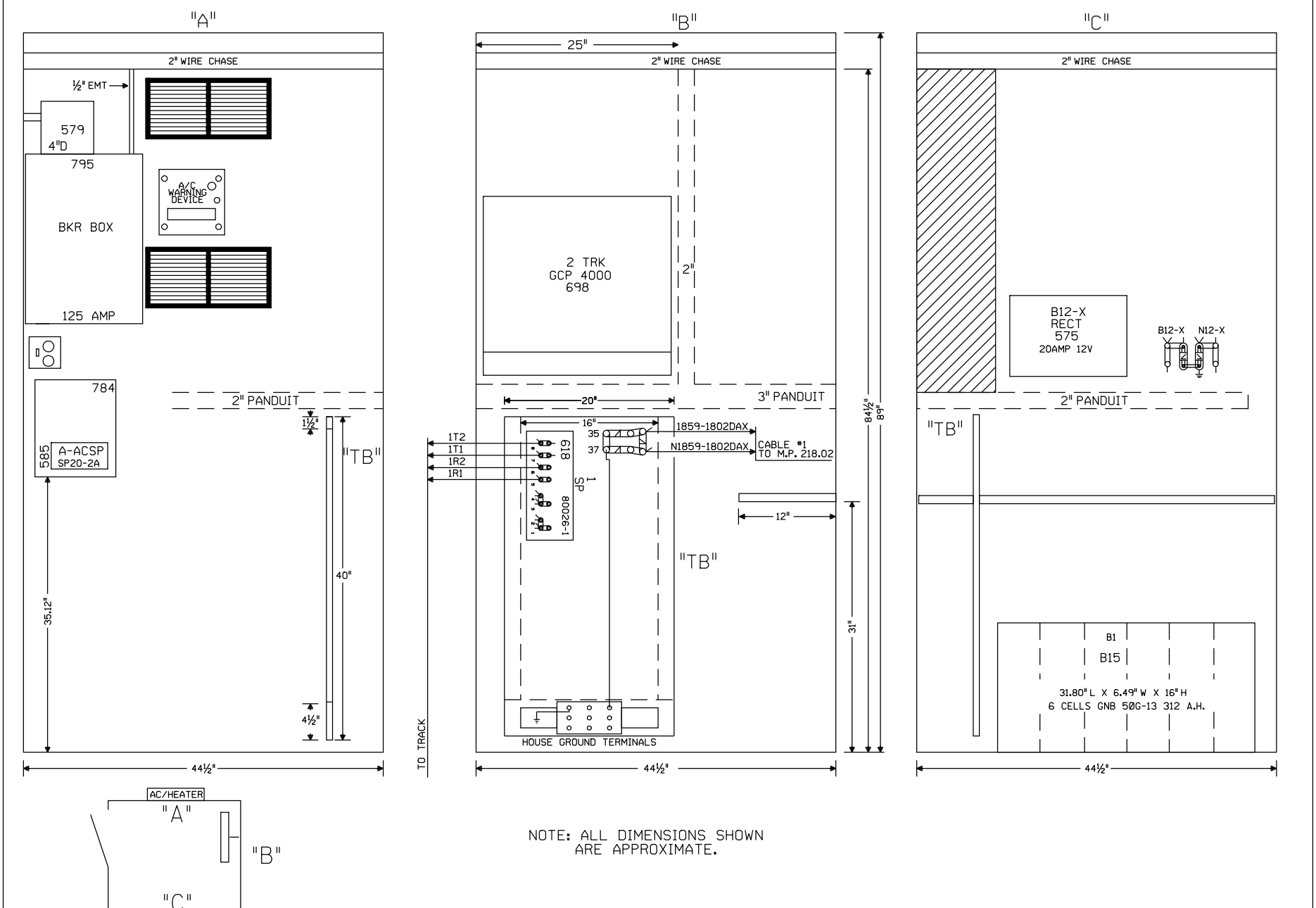

NOTE: ALL DIMENSIONS SHOWN ARE APPROXIMATE.

NEW SHEET

Designed: 12/15/11 INSTALL FLASHERS, GATES AND CWT AT TR 133, M.P. 218.02 Rec#: WO#: 11997 IS: /JPW /NST/JTB	MODIFICATION LEVEL		UNION PACIFIC QUALITY PRODUCTIVITY SAFETY SIGNAL DESIGN	Date: 12/15/11 Des: NST Chk: JPW AFE: 11997	UNION PACIFIC RAILROAD ALTAMONT, ILLINOIS REMOTE LOCATION SALEM SUBDIVISION Office of Sr AVP Engineering - Signal/TCO Omaha, Nebraska	Sh.: 5 DOT 000000R MP: 218.59 ID: 030121859.5X
	Q.A. LAST LEVEL CHECKED	DU				
	LAST LEVEL MOD THIS TYPICAL	DU				
	LAST LEVEL BY DESIGNER	DU				
	CHANGED FROM TYPICAL?	Y				
	REV 01.24.11 4K REMOTE.5					