WCH 3593-E

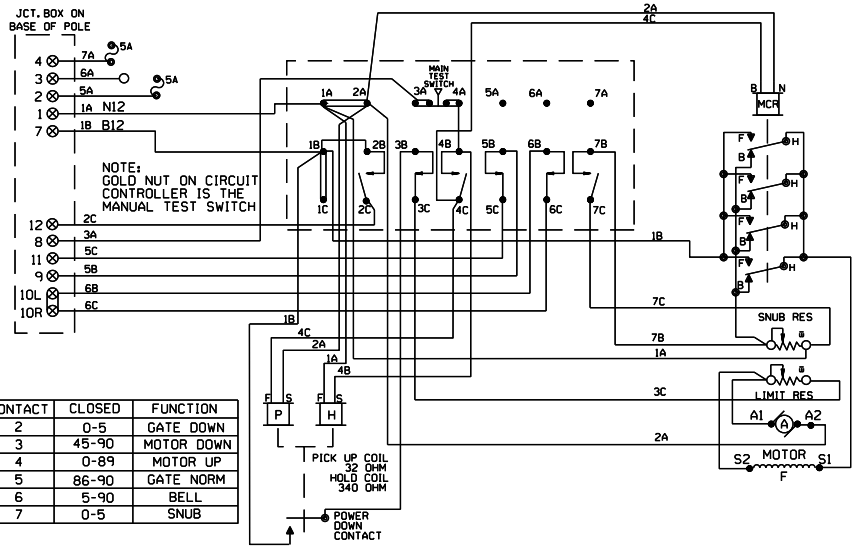

CONTACT	CLOSED	FUNCTION
2	0-5	GATE DOWN
3	45-90	MOTOR DOWN
4	0-89	MOTOR UP
5	86-90	GATE NORM
6	5-90	BELL
7	0-5	SNUB

WCH 3597-E

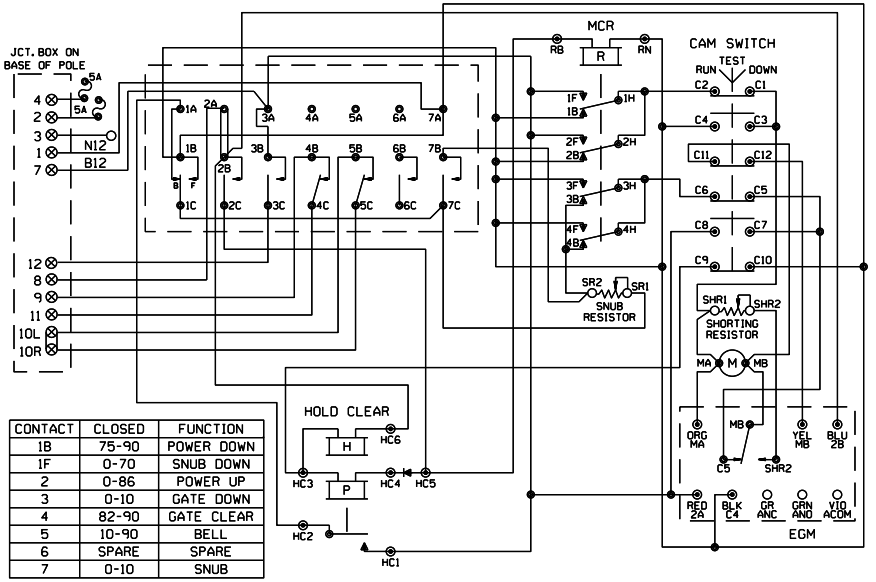

CONTACT	CLOSED	FUNCTION
1B	75-90	POWER DOWN
1F	0-70	SNUB DOWN
2	0-86	POWER UP
3	0-10	GATE DOWN
4	82-90	GATE CLEAR
5	10-90	BELL
6	SPARE	SPARE
7	0-10	SNUB

WCH 3597-RB

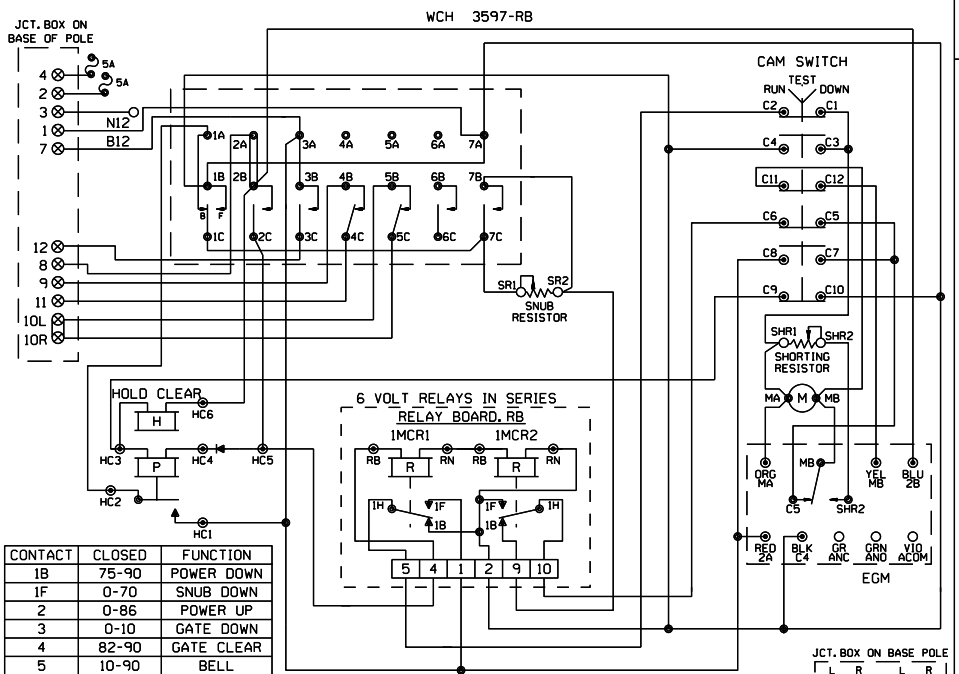

CONTACT	CLOSED	FUNCTION
1B	75-90	POWER DOWN
1F	0-70	SNUB DOWN
2	0-86	POWER UP
3	0-10	GATE DOWN
4	82-90	GATE CLEAR
5	10-90	BELL
6	SPARE	SPARE
7	0-10	SNUB

SHOW TYPE MECH. INSTALLED

ALL MECHANISMS SHOWN IN THE CLEAR POSITION

SAFETRAN S-60

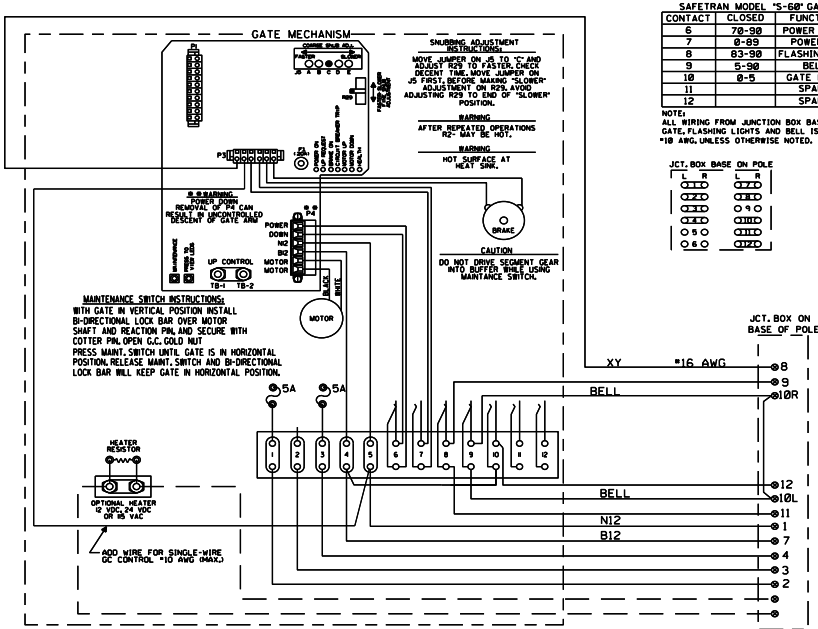

SAFETRAN MODEL "S-60" GATE		
CONTACT	CLOSED	FUNCTION
6	70-90	POWER DOWN
7	0-89	POWER UP
8	83-90	FLASHING LGT.
9	5-90	BELL
10	0-5	GATE DOWN
11		SPARE
12		SPARE

NOTE:
ALL WIRING FROM JUNCTION BOX BASE TO GATE, FLASHING LIGHTS AND BELL IS TO BE #10 AWG. UNLESS OTHERWISE NOTED.

JCT. BOX BASE ON POLE

NEW SHEET

Designed: 08/02/11	MODIFICATION LEVEL		UNION PACIFIC	Date: 08/02/11	UNION PACIFIC RAILROAD
INSTALL FLASHERS W/GATES & CWT. M.P. 226.93 COUNTY ROAD	D. A. LAST LEVEL CHECKED	DU	QUALITY PRODUCTIVITY SAFETY SIGNAL DESIGN	Des: XRL	IRVING, ILLINOIS COUNTY ROAD PANA SUBDIVISION
	LAST LEVEL MOD THIS TYPICAL	DU		Chk: WSD	
	LAST LEVEL BY DESIGNER	DU		AFE: 11226	
Rec'd: WO#: 11226 IS: / /WSD / XRL / JTB	CHANGED FROM TYPICAL?	N			Office of Sr AVP Engineering - Signal/TCO Omaha, Nebraska
	mv 01.24.11 4K GWIRING.7				

Sh.: 6
DOT 542158J
MP: 226.93
ID: 030222693.6X

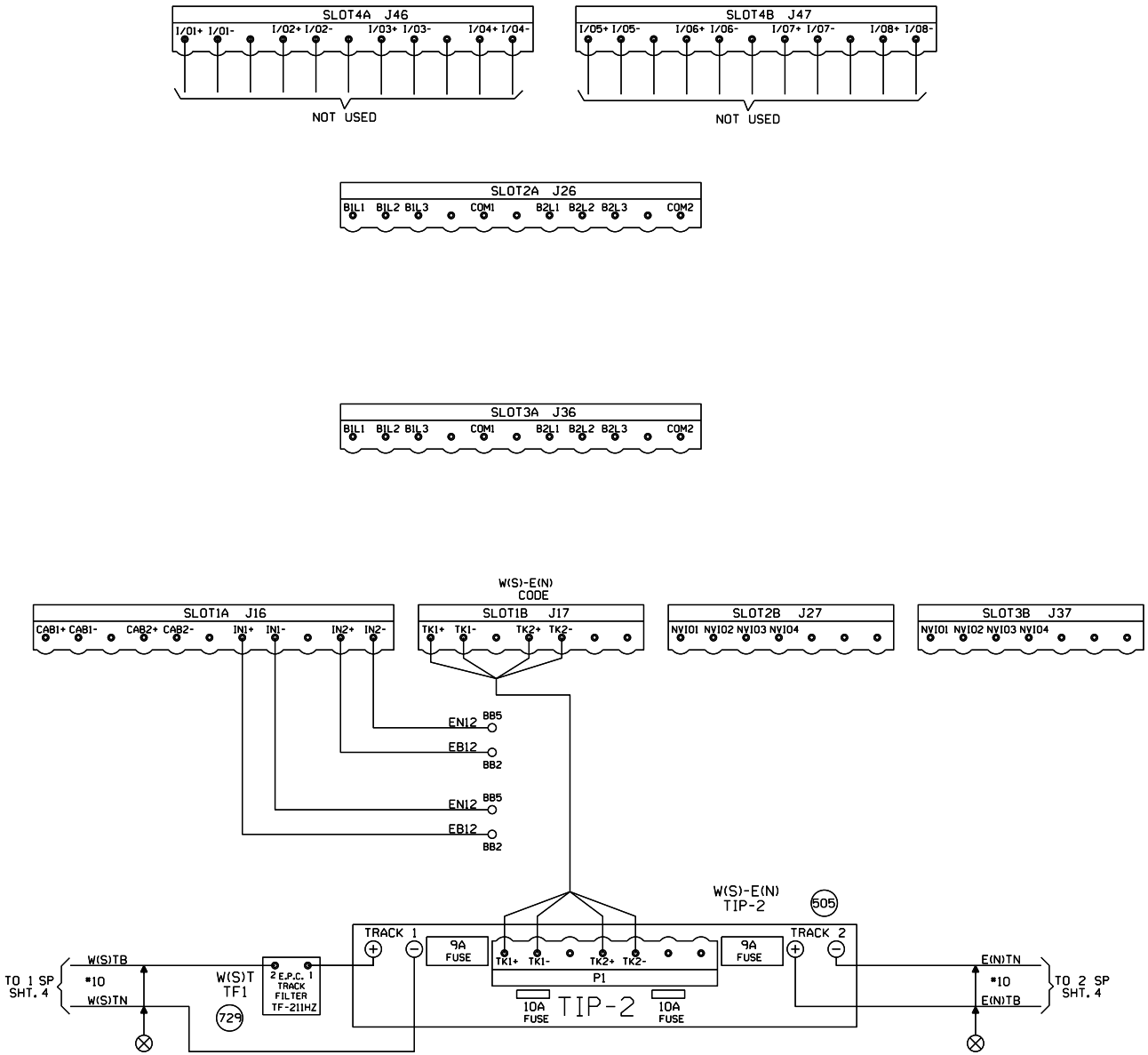

NEW SHEET

					Designed: 08/02/11	MODIFICATION LEVEL		UNION PACIFIC	Date: 08/02/11	UNION PACIFIC RAILROAD	Sh.: 7
					INSTALL FLASHERS W/GATES & CWT. M.P. 226.93 COUNTY ROAD	O.A. LAST LEVEL CHECKED	DU	QUALITY PRODUCTIVITY SAFETY	Des: XRL	IRVING, ILLINOIS COUNTY ROAD PANA SUBDIVISION	DOT 542158J
						LAST LEVEL MOD THIS TYPICAL	DU		Chk: WSD		MP: 226.93
						LAST LEVEL BY DESIGNER	DU				
					Rec#: WO#: 11226	CHANGED FROM TYPICAL?	Y	SIGNAL DESIGN	AFE: 11226	Office of Sr AVP Engineering - Signal/TCO Omaha, Nebraska	ID: 030222693.7S
					IS: /WSD / XRL / JTB	rev 09/15/11 EC5INTV.1					

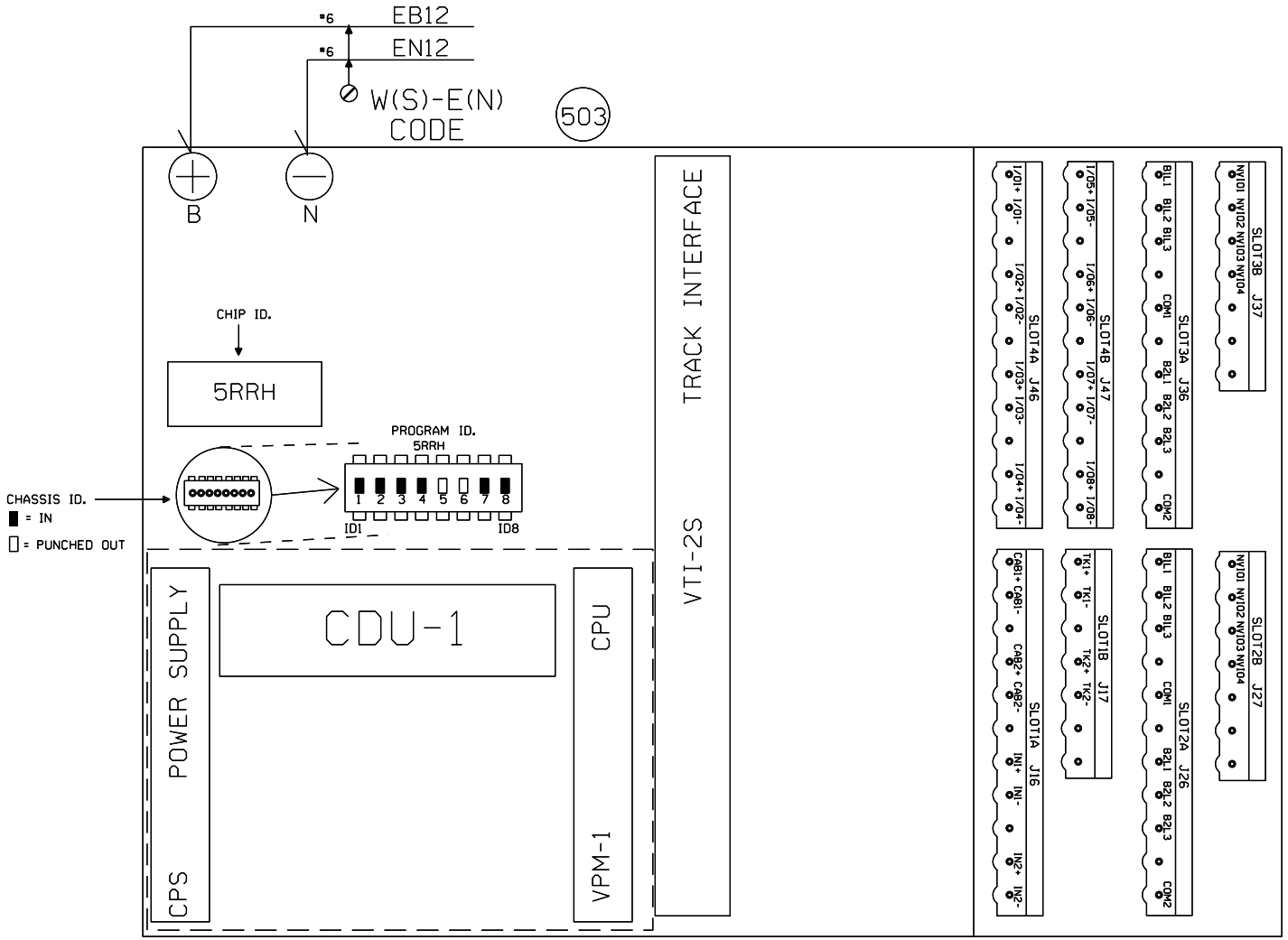

CODE 5
OPERATION SETTINGS

LC1SW FALSE	L ALT-5 FALSE
LC5SW FALSE	R ALT-5 FALSE
RC1SW FALSE	
RC5SW FALSE	

NEW SHEET

Designed: 08/02/11

INSTALL FLASHERS W/GATES & CWT.
M.P. 226.93
COUNTY ROAD

Rec#: WO#: 11226
IS: /WSD
/ /XRL/JTB

MODIFICATION LEVEL	
O.A. LAST LEVEL CHECKED	DU
LAST LEVEL MOD THIS TYPICAL	DU
LAST LEVEL BY DESIGNER	DU
CHANGED FROM TYPICAL?	Y
mv 09/15/11 EC5INTU.3	

UNION PACIFIC
QUALITY PRODUCTIVITY SAFETY
SIGNAL DESIGN

Date: 08/02/11
Des: XRL
Chk: WSD
AFE: 11226

UNION PACIFIC RAILROAD
IRVING, ILLINOIS
COUNTY ROAD
PANA SUBDIVISION
Office of Sr AVP Engineering - Signal/TCO Omaha, Nebraska

Sh.: 8
DOT 542158J
MP: 226.93
ID: 030222693.8S

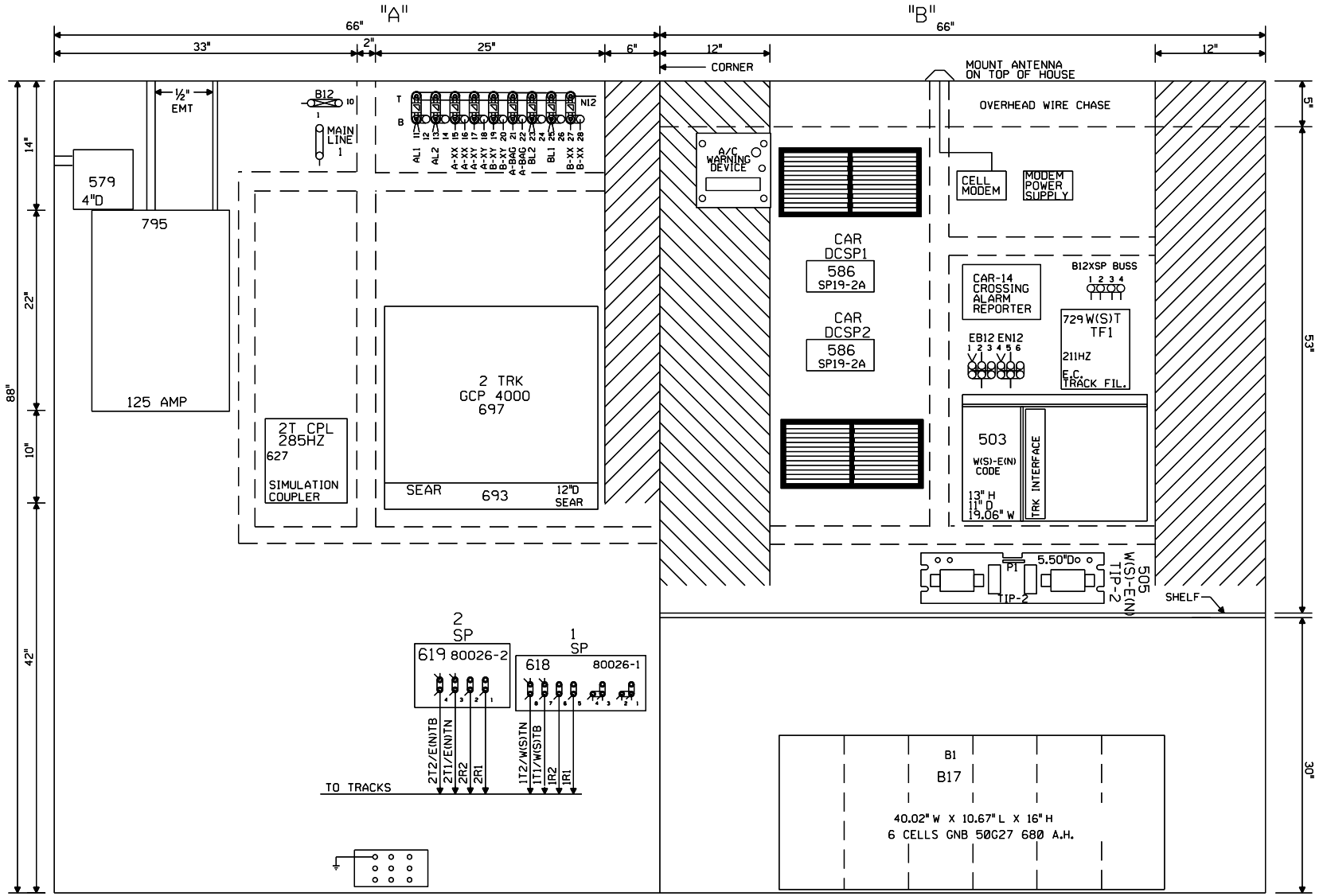

NOTE: ALL DIMENSIONS SHOWN ARE APPROXIMATE.

NEW SHEET

					Designed: 08/02/11	MODIFICATION LEVEL		UNION PACIFIC	Date: 08/02/11	UNION PACIFIC RAILROAD	Sh.: 9
					INSTALL FLASHERS W/GATES & CWT. MP 226.93 COUNTY ROAD	O. A. LAST LEVEL CHECKED	DU	QUALITY PRODUCTIVITY SAFETY	Des: XRL	IRVING, ILLINOIS COUNTY ROAD PANA SUBDIVISION	DOT 542158J
						LAST LEVEL MOD THIS TYPICAL	DU		Chk: WSD		MP: 226.93
						LAST LEVEL BY DESIGNER	DU				
					Rec*: WO*: 11226 /WSD	CHANGED FROM TYPICAL?	Y	SIGNAL DESIGN	AFE: 11226	Office of Sr AVP Engineering - Signal/TCO Omaha, Nebraska	ID: 030222693.9X
					IS: / /XRL/JTB	rev 01.24.11 4K 4TKGFC.8					

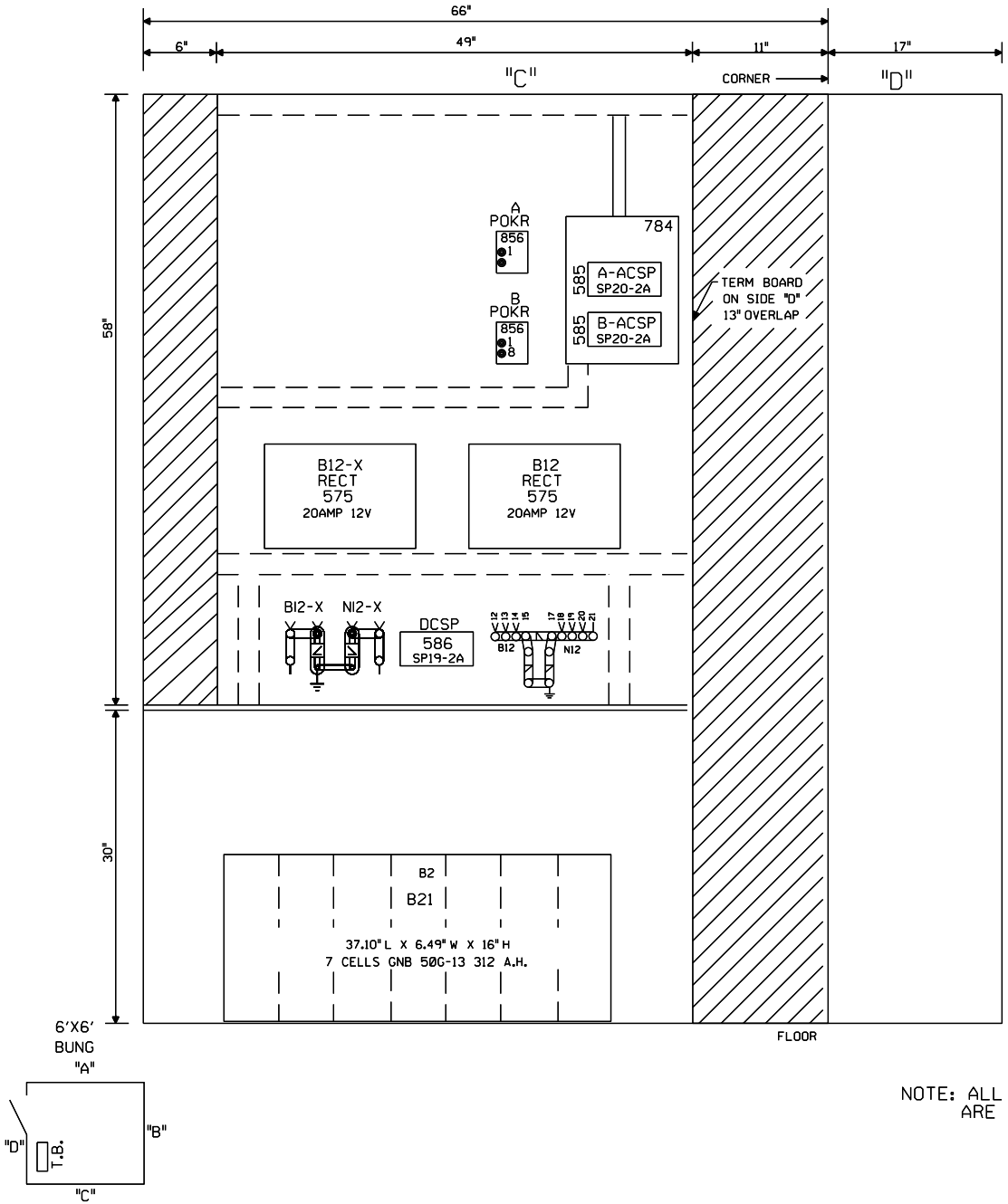

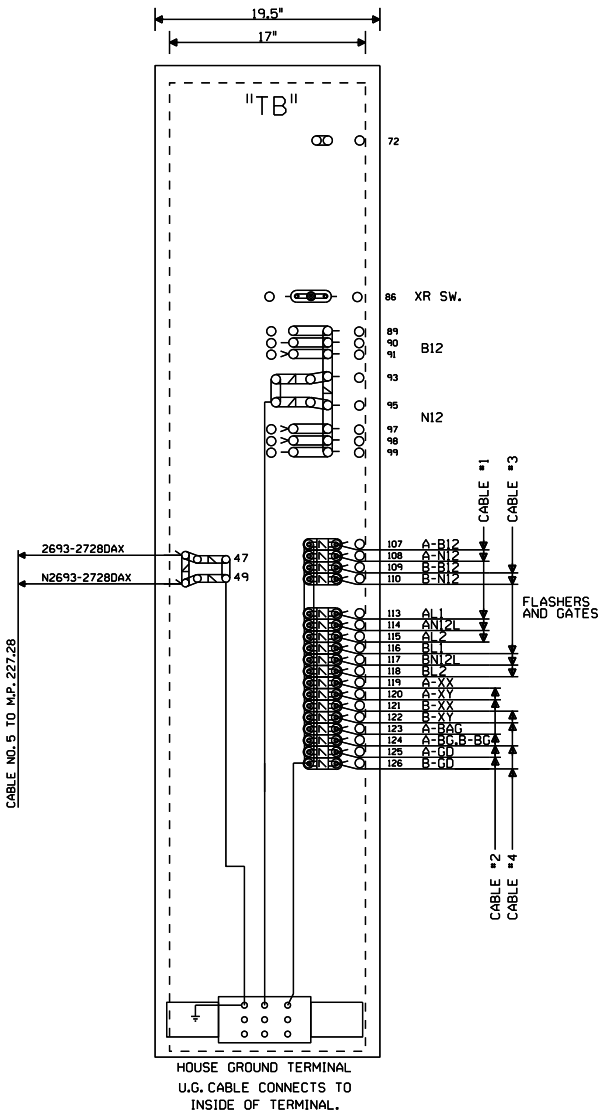

NOTE: ALL DIMENSIONS SHOWN
ARE APPROXIMATE.

NEW SHEET

					Designed: 08/02/11 INSTALL FLASHERS W/GATES & CWT. M.P. 226.93 COUNTY ROAD Rec*: WO*: 11226 IS: /WSD / /XRL/JTB	MODIFICATION LEVEL O. A. LAST LEVEL CHECKED DU LAST LEVEL MOD THIS TYPICAL DU LAST LEVEL BY DESIGNER DU CHANGED FROM TYPICAL? Y Rev 01.24.11 4K GFC.9	UNION PACIFIC QUALITY PRODUCTIVITY SAFETY SIGNAL DESIGN	Date: 08/02/11 Des: XRL Chk: WSD AFE: 11226	**UNION PACIFIC RAILROAD** IRVING, ILLINOIS COUNTY ROAD PANA SUBDIVISION Office of Sr AVP Engineering - Signal/TCO Omaha, Nebraska	Sh.: 10 DOT 542158J MP: 226.93 ID: 030222693.10X