COPY
RECEIVED
JUN 11 2001
Illinois Commerce Commission
RAIL SAFETY SECTION

Form 3

STATE OF ILLINOIS

ILLINOIS COMMERCE COMMISSION

Petition for permission to make a major change in crossing Protection, or to install new protection under 92 Illinois Administrative Code 1535.400(d)

Date: June 7, 2001

X-11652

TO1-0038

To the Illinois Commerce Commission:

The petitioner, Union Pacific Railroad Company shows

(1) That it is a railroad company operating a line of railroad in the State of Illinois.

(2) That petitioner proposes and hereby makes application for authority to make a major change in crossing protection, or to install new protection, under 92 Illinois Administrative Code 1535.400(d) adopted by this Commission.

(3) That the location of the crossing, the nature of protection now established and proposed to be established, and other pertinent facts in connection therewith, are set forth in the statement attached to and forming part of this petition.

(4) That petitioner's reasons and purpose, with reference to its said proposal are to install 4-quad Flashing Light Signals, Gates, and Constant Warning Time Circuitry.

(5) That the facts set forth in this petition and in the statement and plans or plats attached thereto, are, all of them, true and correct to the best of petitioner's knowledge and belief.

WHEREFORE, the petitioner prays that the Commission will, if deemed desirable by the Commission, set the aforesaid matter for hearing, and that the Commission enter an order or adopt a resolution consenting to and granting authority for the making of the said proposed changes in or additions to crossing protection.

UNION PACIFIC RAILROAD COMPANY

By Andrew Murphy

Andrew Murphy
UPRR Industry & Public Projects

DOCKETED

Statement, attached to and part of an application for permission to make a major change in crossing protection or to install new protection, under 92 Ill. Adm. Code 1535.400(d).

1. Name of railroad company: **Union Pacific Railroad Company**

2. Crossing Number: **290 527E**

3. Village or City: **Gardner**

4. Name of Street or Highway: **Gorman Road**

5. Public Agency Maintaining Highway: **Grundy County**

6. Protection now established: **Gates**

7. Protection desired: **4-quad gates & constant warning circuits**

8. Number of main tracks: **1** Other tracks:

9. Number of passenger train movements: 6 am to 6 pm: **3**
   6 pm to 6 am: **3**
10. Number of freight train movements: 6 am to 6 pm: **1**
    6 pm to 6 am: **0**
11. Approximate Number of switch moves: 6 am to 6 pm: **0**
    6 pm to 6 am: **0**
12. Maximum speed of trains at crossing on each track in each direction: **79 MPH**

13. Passenger platforms served by tracks within the limits of track circuits: **NONE**

14. Where automatic signals or gates are proposed, approximate number of train or engine movements daily which would cause false indications or operations: **NONE**

15. In addition to the information listed herein before in Form 3, attach a track plan or the plat of the proposed crossing. This plan should show:

(a) Width of surface or highway.
(b) Highway intersections (including private driveways to be so indicated) and location of established highway signs or signals within 100 feet of crossing.
(c) Location of tracks, switches, and other railroad facilities such as block signals, etc. within limits of track circuits, present and/or proposed.
(d) Where automatic protection is proposed, show proposed location of signals (side lights, cantilevers, etc., if any).
(e) Show the length of each operating track section within the control limits of the crossing protection and its function.

ADDITIONAL INFORMATION

VERIFICATION

I, Andrew T. Murphy, first being duly sworn upon oath depose and say that I am **Engineering Inspector-Industry & Public Projects of Union Pacific Railroad Company**, a Delaware Corporation; that I have read the above and foregoing petition by me subscribed and know the contents thereof; that said comments are true in substance and in fact, except as to those matters stated upon information and belief, and as to those, I believe same to be true.

Union Pacific Railroad Company

By Andrew Murphy

Andrew T. Murphy
UPRR Industry & Public Projects

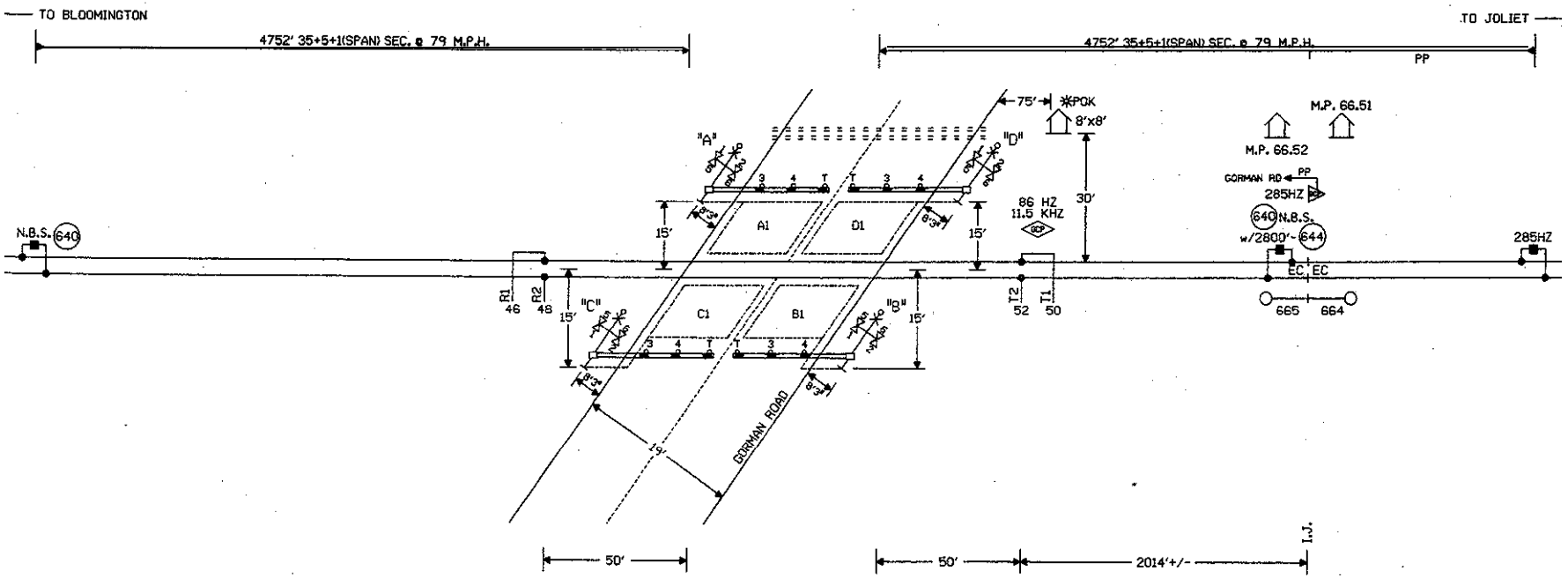

NOTES:

⊗= TWISTED WIRES
INSULATED 1 TWIST PER FT.
ALL TRACK WIRES 2C. #6

TRANSMITTER AND RECEIVER LEADS TO BE SEPARATED BY AT LEAST 12" IN TRENCH, LENGTHS SHOULD NOT EXCEED MANUFACTURES RECOMMENDATION.

TOP OF FOUNDATION TO BE AT SAME ELEVATION AS THE SURFACE OF THE TRAVELED WAY & NO MORE THAN 4" ABOVE THE SURFACE OF THE GROUND.

ALL BUNGALOW WIRING TO BE #16 AWG FLEX UNLESS OTHERWISE SPECIFIED EXCEPT ALL GROUND WIRE TO BE #6 AWG FLEX OR LARGER.

ALL WIRING IN GATE MECHANISM TO BE #10 "AWG FLEX".

REFER TO UP STANDARD DWG FOR BUNGALOW GROUNDING.

DO NOT USE 7 CELLS OF B12 BATTERY UNLESS REQUIRED TO MAINTAIN MINIMUM LAMP VOLTAGE.

ALL LIGHTS TO BE 12" ROUNDELS.

= = = = = = 4" X 70' CONDUIT

LIGHTS: LED LIGHTS

GATE A,C: 21'
GATE B,D: 21'

CRTU MICROBURST

EXIT GATE MANAGEMENT SYSTEM (EGMS) LOOP LOCATION:

1.) 12" FROM CONCRETE CROSSING PANEL. MAY VARY FROM 6" TO 12" DEPENDING ON PAVEMENT QUALITY.
2.) 2' FROM CROSSING CENTERLINE.
3.) 3.5' FROM GATE ARM.
4.) 2' FROM THE EDGE OF THE TRAVELED WAY. MAY BE INCREASED UP TO A MAXIMUM OF 5' WHERE AN IMPROVED SHOULDER OR OTHER EXISTS.
5.) MAXIMUM LOOP WIDTH NOT TO EXCEED 12' AND MINIMUM WIDTH NOT TO BE LESS THAN 3'.

------ = EGMS LOOP

CONSTRUCTION NOTES:

1.) THE REMOTE GCP BUNGALOW (M.P. 66.52) WILL BE INSTALLED AS A PART OF THIS PROJECT.

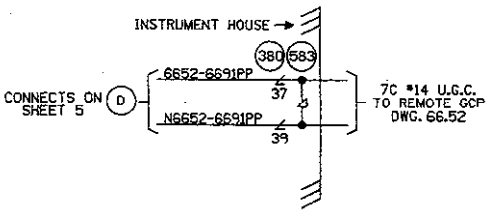

NEW SHEET

GARDNER, ILLINOIS
GORMAN ROAD
M.P. 66.91
JOLIET SUBDIVISION
D.O.T.#290 527E
PROJ.#

S ←—○—→ N

5-1-01 UPGRADE CROSSING PROTECTION FOR THE HIGH SPEED RAIL PROJ. FROM MAZONIA TO SPRINGFIELD. AFE 004438N JJF WITT/JNM	MODIFICATION LEVEL		UNION PACIFIC SIGNAL DESIGN	DES: WITT.IND.	UNION PACIFIC RAILROAD JOLIET, ILLINOIS TO BLOOMINGTON, ILLINOIS C.T.C. CIRCUITS	DATE 5-1-01
	Q.A. LAST LEVEL CHK'D.	DA		DIG: WITT.IND.		SHEET 1
	LAST LEVEL MOD. THIS TYP.	CZ		CHK: J.J.F.		DWG 66.91
	LAST LEVEL BY DESIGNER.	DD		A.F.E. 004438N		RTE-CSI
	CHANGED FROM TYP.? Y/N	Y		ID= CSL6691.IX	OFFICE OF CHIEF ENG'R OMAHA NEBR.	

(REV 7-9-00 1/1TKBG.1)

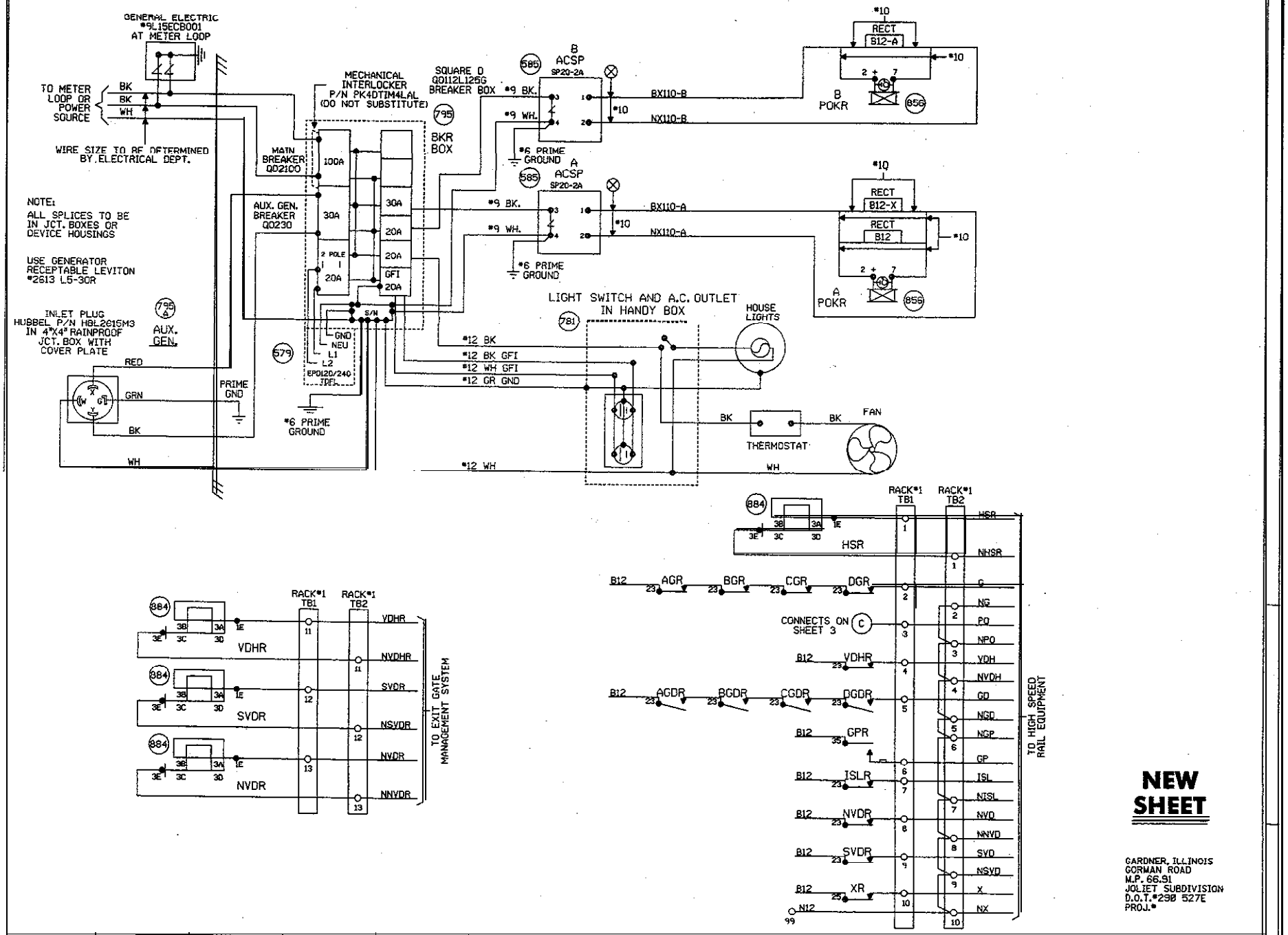

5-1-01 UPGRADE CROSSING PROTECTION FOR THE HIGH SPEED RAIL PROJ. FROM MAZONIA TO SPRINGFIELD. AFE 004438N JJF WITT/JNM	MODIFICATION LEVEL		UNION PACIFIC SAFETY SIGNAL DESIGN	DES: WITT,JNO.	UNION PACIFIC RAILROAD JOLIET, ILLINOIS TO BLOOMINGTON, ILLINOIS C.T.C. CIRCUITS	DATE 5-1-01
	Q.A. LAST LEVEL CHK'D.	DA		DTG: WITT,JNO.		SHEET 2
	LAST LEVEL MOD. THIS TYP.	C7		CHK: J.J.F.		DWG 66.91
	LAST LEVEL BY DESIGNER	00		A.F.E. 004438N		RTE-CSL
	CHANGED FROM TYP.7 Y/N	Y		ID= CSL6691.2X	OFFICE OF CHIEF ENGR OMAHA NEBR.	

(REV. 7-9-00) (HCA4G.2)

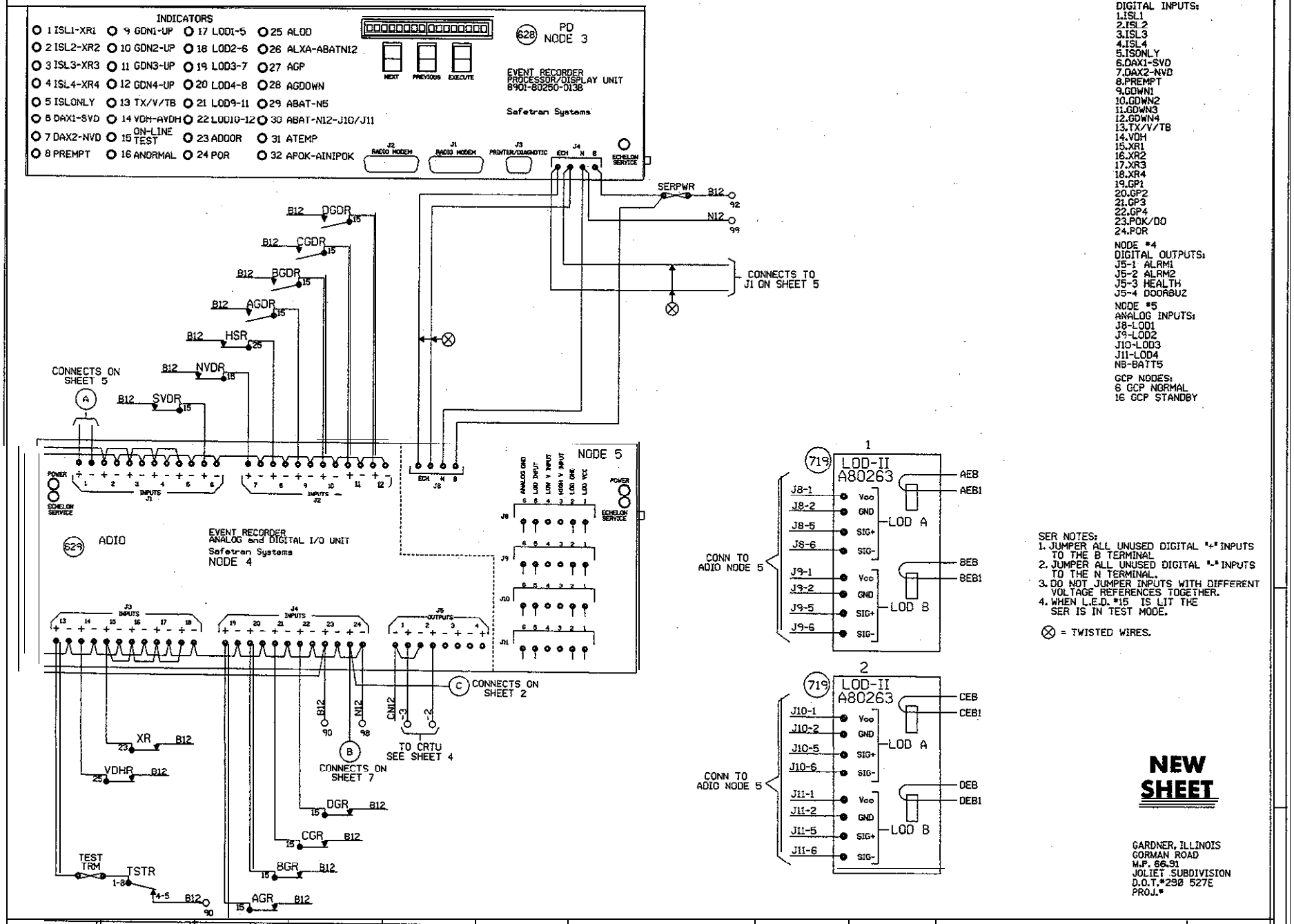
INDICATORS
1 ISL1-XR1
2 ISL2-XR2
3 ISL3-XR3
4 ISL4-XR4
5 ISLONLY
6 DAX1-SVD
7 DAX2-NVD
8 PREMPT
9 GDN1-UP
10 GDN2-UP
11 GDN3-UP
12 GDN4-UP
13 TX/V/TB
14 VDH-AVDH
15 ON-LINE TEST
16 ANORMAL
17 LOD1-5
18 LOD2-6
19 LOD3-7
20 LOD4-8
21 LOD9-11
22 LOD10-12
23 ADOOR
24 POR
25 ALOD
26 ALXA-ABATN12
27 AGP
28 AGDOWN
29 ABAT-N5
30 ABAT-N12-J10/J11
31 ATEMP
32 APOK-AINIPOK
NEXT
PREVIOUS
EXECUTE
J2 RADIO MODEM
J1 RADIO MODEM
J3 PRINTER/DIAGNOSTIC
J4 ECH N B
ECHELON SERVICE
(828) PD NODE 3
EVENT RECORDER PROCESSOR/DISPLAY UNIT
8901-80250-0138
Safetran Systems
SERPWR B12 92
N12 99
CONNECTS TO J1 ON SHEET 5
B12 DGDR 15
B12 CGDR 15
B12 BGDR 15
B12 AGDR 15
B12 HSR 25
B12 NVDR 15
B12 SVDR 15
CONNECTS ON SHEET 5
(A)
POWER
ECHELON SERVICE
INPUTS J1
INPUTS J2
ECH N B
J8
NODE 5
ANALOG GND
LOD INPUT
LOW V INPUT
HIGH V INPUT
LOD GND
LOD VCC
POWER
ECHELON SERVICE
J8
J9
J10
J11
(829) ADIO
EVENT RECORDER ANALOG and DIGITAL I/O UNIT
Safetran Systems
NODE 4
J3 INPUTS
J4 INPUTS
J5 OUTPUTS
XR B12 23
VDHR B12 25
DGR B12 15
CGR B12 15
BGR B12 15
AGR B12 15
TEST TRM
TSTR 1-8
4-5 B12 90
B12 90
N12 98
(B) CONNECTS ON SHEET 7
CN12 -3
-2
(C) CONNECTS ON SHEET 2
TO CRTU SEE SHEET 4
NODE #4
DIGITAL INPUTS:
1.ISL1
2.ISL2
3.ISL3
4.ISL4
5.ISONLY
6.DAX1-SVD
7.DAX2-NVD
8.PREMPT
9.GDWN1
10.GDWN2
11.GDWN3
12.GDWN4
13.TX/V/TB
14.VDH
15.XR1
16.XR2
17.XR3
18.XR4
19.GP1
20.GP2
21.GP3
22.GP4
23.POK/DO
24.POR
NODE #4
DIGITAL OUTPUTS:
J5-1 ALRM1
J5-2 ALRM2
J5-3 HEALTH
J5-4 DOORBUZ
NODE #5
ANALOG INPUTS:
J8-LOD1
J9-LOD2
J10-LOD3
J11-LOD4
NB-BATTS
GCP NODES:
6 GCP NORMAL
16 GCP STANDBY
1
(719) LOD-II A80263
J8-1 Vcc
J8-2 GND
J8-5 SIG+
J8-6 SIG-
LOD A
AEB
AEB1
J9-1 Vcc
J9-2 GND
J9-5 SIG+
J9-6 SIG-
LOD B
BEB
BEB1
CONN TO ADIO NODE 5
2
(719) LOD-II A80263
J10-1 Vcc
J10-2 GND
J10-5 SIG+
J10-6 SIG-
LOD A
CEB
CEB1
J11-1 Vcc
J11-2 GND
J11-5 SIG+
J11-6 SIG-
LOD B
DEB
DEB1
CONN TO ADIO NODE 5
SER NOTES:
1. JUMPER ALL UNUSED DIGITAL "+" INPUTS TO THE B TERMINAL
2. JUMPER ALL UNUSED DIGITAL "-" INPUTS TO THE N TERMINAL.
3. DO NOT JUMPER INPUTS WITH DIFFERENT VOLTAGE REFERENCES TOGETHER.
4. WHEN L.E.D. #15 IS LIT THE SER IS IN TEST MODE.
⊗ = TWISTED WIRES.
NEW SHEET
GARDNER, ILLINOIS
GORMAN ROAD
M.P. 66.91
JOLIET SUBDIVISION
D.O.T.#290 527E
PROJ.#
5-1-01
UPGRADE CROSSING PROTECTION FOR THE HIGH SPEED RAIL PROJ. FROM MAZONIA TO SPRINGFIELD.
AFE 004438N
JJF
WITT/JNM
MODIFICATION LEVEL
Q.A. LAST LEVEL CHK'D. DA
LAST LEVEL MOD. THIS TYP. CZ
LAST LEVEL BY DESIGNER. DD
CHANGED FROM TYP.? Y/N Y
UNION PACIFIC
SAFETY SIGNAL DESIGN
DES: WITT,JNB.
DR: WITT,JNB.
CHK: J.J.F.
A.F.E. 004438N
ID= CSL6691.3X
UNION PACIFIC RAILROAD
JOLIET, ILLINOIS TO BLOOMINGTON, ILLINOIS
C.T.C. CIRCUITS
OFFICE OF CHIEF ENG'R
OMAHA NEBR.
DATE 5-1-01
SHEET 3
DWG 66.91
RTE-CSL

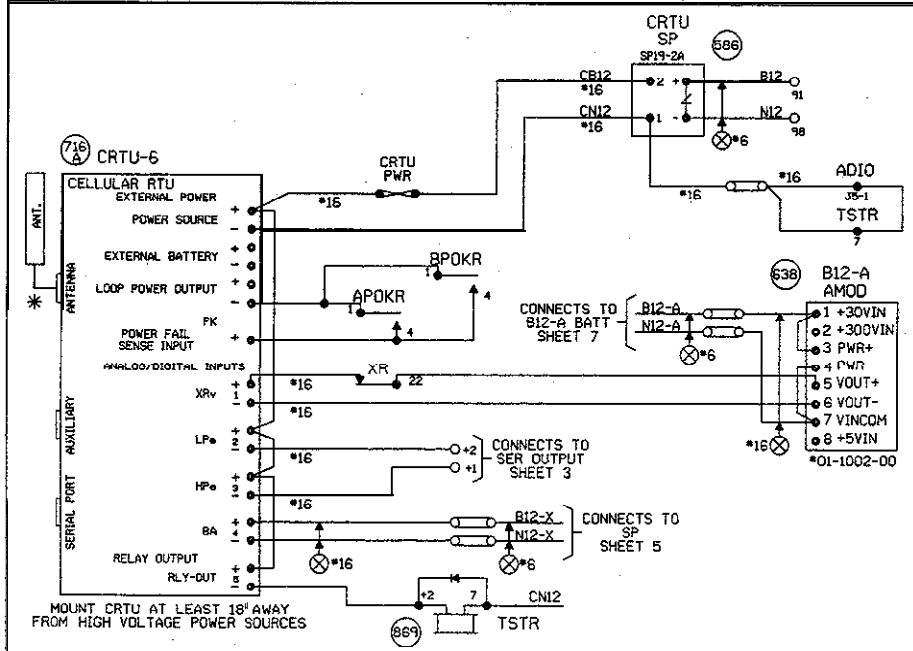

NOTES:

ALL DIODES 1N5060 OR 1N4004 UNLESS OTHERWISE NOTED.
✳MOUNT ANTENNA ON TOP OF HOUSE.
ALL WIRES #18 UNLESS OTHERWISE NOTED.
ALL UNUSED 'NC' INPUTS MUST BE TIED HIGH TO BATTERY
ALL UNUSED ANALOG INPUTS MUST BE TIED HIGH TO BATTERY
ALL UNUSED 'NO' INPUTS MUST BE DISCONNECTED
CRTU FRONT PANEL DISPLAYCHART INDICATES NORMAL STATE

■ DIGITAL INPUT HIGH, OR POWER FAIL INPUT CLOSED

□ DIGITAL INPUT LOW, OR POWER FAIL INPUT OPEN

NORMAL STATE FOR ANALOG CHANNELS IS EQUAL TO THE STORED NOMINAL VOLTAGE +120% OR -81%

■ L ← LATCH IS SET BECAUSE CRTU DETECTED AN ALARM CONDITION

12.06V L

'sRUN MODE' 'sRUN MODE-SILENT'
↑ ↑
CRTU RADIO IS DISABLED. REPROGRAM CRTU WITH LAPTOP.

MEASURE NOMINAL VOLTAGE ON ANALOG INPUT MODULE BETWEEN 1 +30VIN AND 7 VINCOM

ANALOG AND AC INPUT MODULES MUST BE MOUNTED LESS THAN 12" FROM THE CRTU

ANALOG MODULES CONVERT DC VOLTAGE TO A SQUARE WAVE. A WORKING ANALOG MODULE WILL HAVE 4.5VDC TO 8.0VDC BETWEEN 5VOUT+ AND 6VOUT-. WHERE, 0VOLTS = 0HZ OUT, 30VOLTS = 10KHZ OUT, AND 15VOLTS = 5KHZ OUT
MAKE SURE CRTU IS PROGRAMMED WITH CALIBRATION SETTINGS.

UNIT INSTALLATION AND SETUP

N.N. SITE ID WHERE; SSSS = 4 CHARACTER SUBDIVISION ID. FILL WITH PRECEDING ZEROS AS REQUIRED. THE MAIN TRACK SUBDIVISION ID* IS IN THE CURRENT TIMETABLE. INDUSTRIAL LEADS, LEASED, AND LEAD TRACKS LISTED WITHIN THE SUBDIVISION MAY HAVE THEIR OWN UNIQUE SUBDIVISION ID*. DO NOT AUTOMATICALLY USE THE MAIN TRACK SUBDIVISION ID* FOR THESE OTHER TRACKS. ALWAYS DOUBLE CHECK WITH THE MOST CURRENT PRINTED COPY OF THE TIMETABLE.
LLLLLLLLL = 8 CHARACTERS USE DOT* AT CROSSINGS, AND USE MP* AT WAYSIDE AND HBD SITES. FILL WITH PRECEDING DASHES AS REQUIRED.
THE MP* MUST USE A DECIMAL POINT TO SEPARATE NUMBERS.
AA = 2 CHARACTER STATE NAME FOR CROSSINGS.
AA = 'WD' FOR WAYSIDE LOCATIONS, AA = 'HB' FOR HBD SITES.
MUST BE 14 CHARACTERS LONG, NO SPACES ALLOWED.

SITE IDENTIFIER: SSSSLLLLLLLAA	0025-290527EIL
SIGNAL STRENGTH dBm	
CARRIER ID	
FIRMWARE VERSION	2.3.06
SERIAL NUMBER	
CONFIGURATION NET	MICROBURST
SIGNAL STATUS	
SCADANET STATUS	
SILENCE INTERVAL	60 MINUTES
HEALTHCHECK INTERVAL	EVERY 2 DAYS
ALARM DEFER DELAY	240 MINUTES (4 HOURS)
OPERATION TO RESUMES	MAN

CALIBRATION CONSTANT	
CH1	
CH4	
POWER SOURCE	

FIELD PROVIDES: SAMPLED NOMINAL VOLTAGES, SCADANET STATUS CALIBRATION CONSTANTS, SERIAL NUMBER, AND SIGNAL STATUS.

CHANNEL SETUP - STANDARD CONFIGURATION 3:XRv,LPe,HPe,BA

CHANNEL NORMAL STATE	SENSE (NO/NC)	NAME FUNCTION	RECOGNITION DELAY SECONDS ACTIVE	RECOGNITION DELAY SECONDS NORMAL	RETURN TO NORMAL	REPORTING MODE	ALARM LINKED CHANNEL	ALARM LINKED CRITERIA	EVENT LOGGING ENABLED OPTIONS
POWER FAIL (CH5) ■	POWER FAIL DETECT NO	PFin-PK AC POWER FAIL	7,200 ALARM	300 NORMAL	ENABLED	ALERT	DISABLED	N/A	
CH1 STORED NOMINAL VOLTAGE	ANALOG INPUT N/A	CH1-XR/V XR DOWN TO LONG BATTERY LOW	1800 ALARM	300 NORMAL	ENABLED	ALERT W/UPDATE	DISABLED	N/A	ANALOG VALUE SENT
CH2 □	DIGITAL INPUT NO	CH2-LPe LIGHT OUT GATE NOT UP/DOWN	120 ALARM	10 NORMAL	ENABLED	ALERT	DISABLED	N/A	
CH3 □	DIGITAL INPUT NO	CH3-HPe VEHICLE DETECTOR HEALTH FAILURE	120 ALARM	10 NORMAL	ENABLED	ALERT	DISABLED	N/A	
CH4 STORED NOMINAL VOLTAGE	ANALOG INPUT N/A	CH4-BA/V BATTERY MONITOR BATTERY LOW	300 ALARM	300 NORMAL	DISABLED	ALERT W/UPDATE	DISABLED	N/A	DIGITAL EVENTS
POWER SOURCE (CH6)	ANALOG INPUT N/A	PS-BA/V BATTERY MONITOR BATTERY LOW	300 ALARM	300 NORMAL	DISABLED	ALERT W/UPDATE	DISABLED	N/A	PFin-PK CH2-LPe CH3-HPe

ANALOG CHANNEL	USEFUL RANGE VOLTS LOW	USEFUL RANGE VOLTS HIGH	DISPLAYED RANGE VOLTS LOW	DISPLAYED RANGE VOLTS HIGH	RELATIVE ALARM POINT LOW	RELATIVE ALARM POINT HIGH	ABSOLUTE ALARM POINT LOW	ABSOLUTE ALARM POINT HIGH	AUTOMATIC UPDATE INTERVAL	STORED NOMINAL VOLTAGE	SAMPLED NOMINAL VOLTAGE
CH1	0.0	30.00	0.0	30.00	81%	120%	10.0	28.0	10 DAYS	12.69	
CH2											
CH3											
CH4	0.0	30.00	0.0	30.00	81%	120%	10.0	28.0	10 DAYS	12.69	
POWER SOURCE	0.0	30.00	0.0	30.00	81%	120%	10.0	28.0	10 DAYS	12.69	
RELAY OUTPUT	NAME RLY-OUT		ACTIVE SET-UP-OPEN		NORMAL CLR-ON-CLOSE		PULSE DURATION		15 SECONDS	CHARTS REV'D 3-2-01	

MAINTENANCE OPERATIONS

TO START OR ABORT ANY PROCEDURE
1. PRESS THE 'CANCEL' BUTTON FIRST

WHEN RESPONDING TO A CALL, PUT THE CRTU IN THE 'SILENCE ALARMS' MODE

1. PRESS 'SELECT' AND THEN '+ ARROW' BUTTON UNTIL DISPLAY: ACTION? SILENCE ALARMS
2. PRESS THE 'SELECT' BUTTON TWICE
3. CORRECT PROBLEM AND SIMULATE NORMAL TRAIN MOVEMENT THROUGH THE LOCATION
4. EXAMINE EACH CHANNEL ON THE CRTU
5. PRESS THE '+/- ARROW' BUTTON VERIFY ALL CHANNELS INDICATE A NORMAL STATE NORMAL STATES ARE ON THE CHANNEL SETUP CHART

CLEAR TIMERS, LATCHES AND SEND ALL NORMAL

1. DO STEPS #1 - #5 ABOVE, AND PRESS 'CANCEL'.
2. PRESS 'SELECT' AND THEN '- ARROW' BUTTON UNTIL DISPLAY: ACTION? SERVICE MODE
3. PRESS 'SELECT' AGAIN TO RESET TIMERS, AND IF DISPLAY: SERVICE MODE ALL NORMAL
4. PRESS 'SELECT' AGAIN TO CLEAR LATCHES, AND SEND ALL NORMAL. SKIP STEPS #5-#6.
5. HOWEVER, IF ALARMS ARE NOT CLEARED: DISPLAY: SERVICE MODE ALARMS PENDING/PRESENT
6. PRESS 'CANCEL', CORRECT PROBLEM AND REPEAT STEPS #2 THRU #5 UNTIL ALL NORMAL SENT.

TO CANCEL THE 'SILENCE ALARMS' MODE

1. PRESS 'SELECT' AND THEN '+ ARROW' BUTTON UNTIL DISPLAY: ACTION? CANCEL SILENCE
2. PRESS THE 'SELECT' BUTTON AGAIN

EXAMINE & SET BATTERY VOLTAGE NOMINAL VALUE

1. PRESS THE '+ ARROW' OR '- ARROW' BUTTON UNTIL THE DESIRED CHANNEL IS DISPLAYED. DISPLAY: PS-BA: 13.83V NORMAL
2. VERIFY THE DISPLAYED READING WITH A DIGITAL VOLTMETER
3. PRESS THE 'SELECT' BUTTON, AND THE CRTU DISPLAY WILL SWITCH BETWEEN CURRENT/SAVED NOMINAL VOLTAGE VALUES. DISPLAY: NOMINAL ON *6? (CURRENT) 13.83 DISPLAY: SAVED NOMINAL 6 (STORED) 12.69
4. PRESS THE 'SELECT' BUTTON AND THE CURRENT OR 'NOMINAL ON' VALUE WILL BE SAMPLED AND STORED AS THE 'SAVED NOMINAL' VALUE
5. VERIFY THE 'NOMINAL ON' AND 'SAVED NOMINAL' VALUES ARE EQUIVALENT, REPEAT STEPS #1 THRU #3 & PRESS THE 'CANCEL' BUTTON.

NEW SHEET

GARDNER, ILLINOIS
GORMAN ROAD
M.P. 66.91
JOLIET SUBDIVISION
D.O.T.#290 527E
PROJ.#

5-1-01
UPGRADE CROSSING PROTECTION FOR THE HIGH SPEED RAIL PROJ. FROM MAZONIA TO SPRINGFIELD.
AFE 004438N JJF WITT/JNM

MODIFICATION LEVEL	
Q.A. LAST LEVEL CHK'D.	DA
LAST LEVEL MOD. THIS TYP.	CZ
LAST LEVEL BY DESIGNER.	DD
CHANGED FROM TYP.? Y/N	Y

UNION PACIFIC SAFETY SIGNAL DESIGN

DES: WITT.IND.
DIG: WITT.IND.
CHK: J.J.F.
A.F.E. 00443BN
ID: CSL6691.4X

UNION PACIFIC RAILROAD
JOLIET, ILLINOIS TO BLOOMINGTON, ILLINOIS
C.T.C. CIRCUITS
OFFICE OF CHIEF ENG'R OMAHA NEBR.

DATE 5-1-01
SHEET 4
DWG 66.91
RTE-CSL

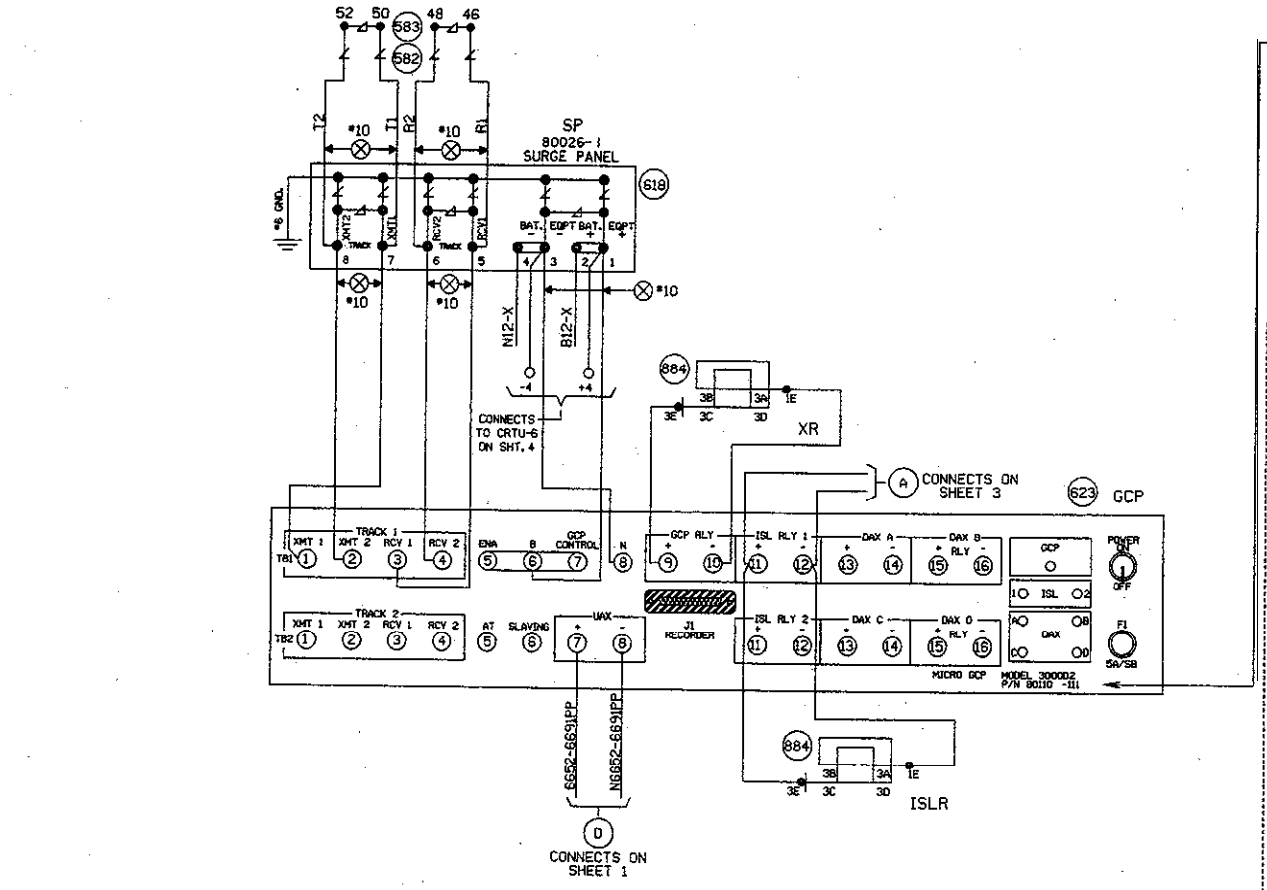

NOTE:

THIS DRAWING WAS DESIGNED FOR A SPECIFIC APPLICATION. IF A MODIFICATION OR REDESIGN OF THIS DRAWING CAUSES ANY MODULES TO CHANGE, THE UNIT'S PART NUMBER MUST BE CHANGED TO CORRESPOND ACCORDINGLY.

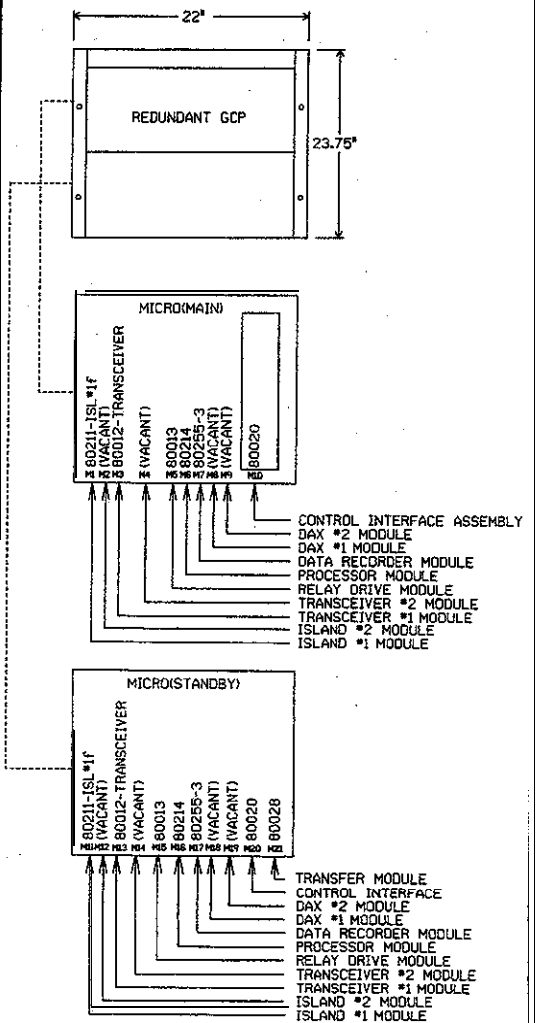

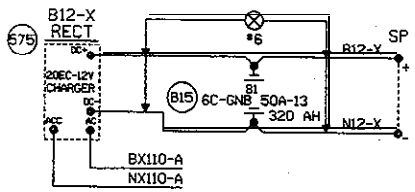

NOTE:

EACH TRANSMITTER TO RAIL WIRE FROM TB1-1 AND TB1-2 MUST NOT EXCEED THE MAXIMUM LENGTH SPECIFIED IN THE TABLE SHOWN BELOW. THE RECEIVER WIRE LENGTH IS NOT CRITICAL. DOES NOT APPLY TO 6 TRACK WIRE APPLICATION.

"Mf" FREQUENCY (HZ)	MAXIMUM TRANSMIT WIRE LENGTH (FEET)
86	100
114	125
156	150
211	200
285-970	250

NEW SHEET

GARDNER, ILLINOIS
GORMAN ROAD
M.P. 66.91
JOLIET SUBDIVISION
D.O.T.#290 527E
PROJ.#

5-1-01
UPGRADE CROSSING PROTECTION FOR THE HIGH SPEED RAIL PROJ. FROM MAZONIA TO SPRINGFIELD. AFE 004438N JJF WITT/JNM

MODIFICATION LEVEL	
O.A. LAST LEVEL CHK'D.	BA
LAST LEVEL MOD THIS TYP.	CZ
LAST LEVEL BY DESIGNER.	BB
CHANGED FROM TYP.2 Y/N	Y

UNION PACIFIC SAFETY SIGNAL DESIGN

DES. WITT.IND.
DIG. WITT.IND.
CHK. J.J.F.
A.F.E. 004438N
ID= CSL6691.5X

UNION PACIFIC RAILROAD
JOLIET, ILLINOIS TO
BLOOMINGTON, ILLINOIS
C.T.C. CIRCUITS

OFFICE OF CHIEF ENG'R OMAHA, NEBR.

DATE 5-1-01
SHEET 5
DWG 66.91
RTE CSL

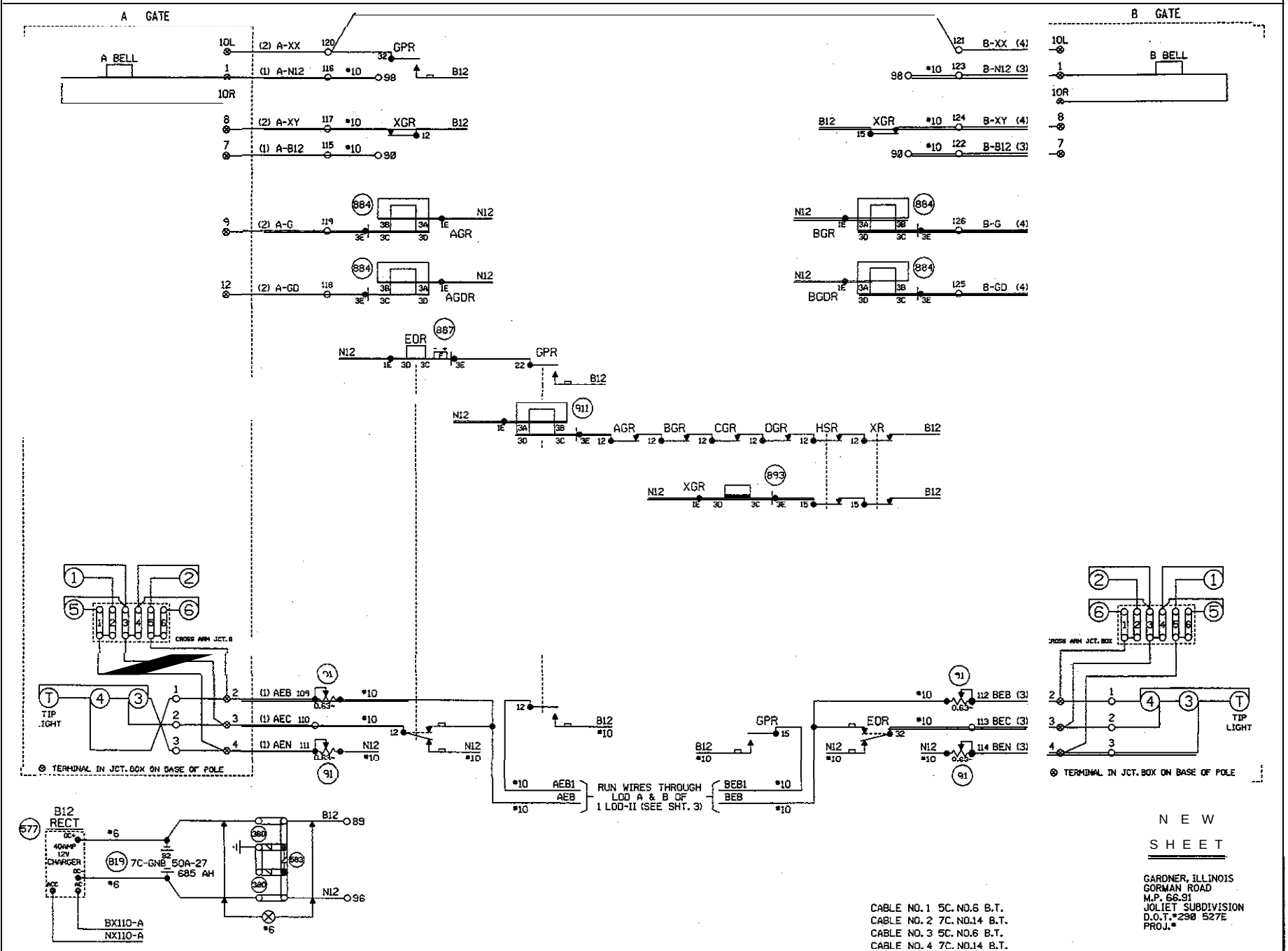

CABLE NO. 1 5C. NO.6 B.T.
CABLE NO. 2 7C. NO.14 B.T.
CABLE NO. 3 5C. NO.6 B.T.
CABLE NO. 4 7C. NO.14 B.T.

N E W
S H E E T

GARDNER, ILLINOIS
GORMAN ROAD
M.P. 66.91
JOLIET SUBDIVISION
D.O.T.#290 527E
PROJ.#

5-1-01
UPGRADE CROSSING PROTECTION FOR THE HIGH SPEED RAIL PROJ. FROM MAZONIA TO SPRINGFIELD. AFE 00443BN JJF WITT/JNM

MODIFICATION LEVEL	
Q.A. LAST LEVEL CHK'D.	DA
LAST LEVEL MOD. THIS TYP.	CZ
LAST LEVEL BY DESIGNER.	DD
CHANGED FROM TYP.? Y/N	Y

UNION PACIFIC
SAFETY QUALITY PRODUCTIVITY
SIGNAL DESIGN

DES: WITT.IND.	
DIG: WITT.IND.	
CHK: J.J.F.	
A.F.E. 00443BN	
ID= CSL669L6X	

UNION PACIFIC RAILROAD
JOLIET, ILLINOIS TO BLOOMINGTON, ILLINOIS
C.T.C. CIRCUITS
OFFICE OF CHIEF ENG'R OMAHA NEBR.

DATE	5-1-01
SHEET	6
DWG	66.91
	RTE-CSL

(REV. 7-9-00) (4GTYP.5)

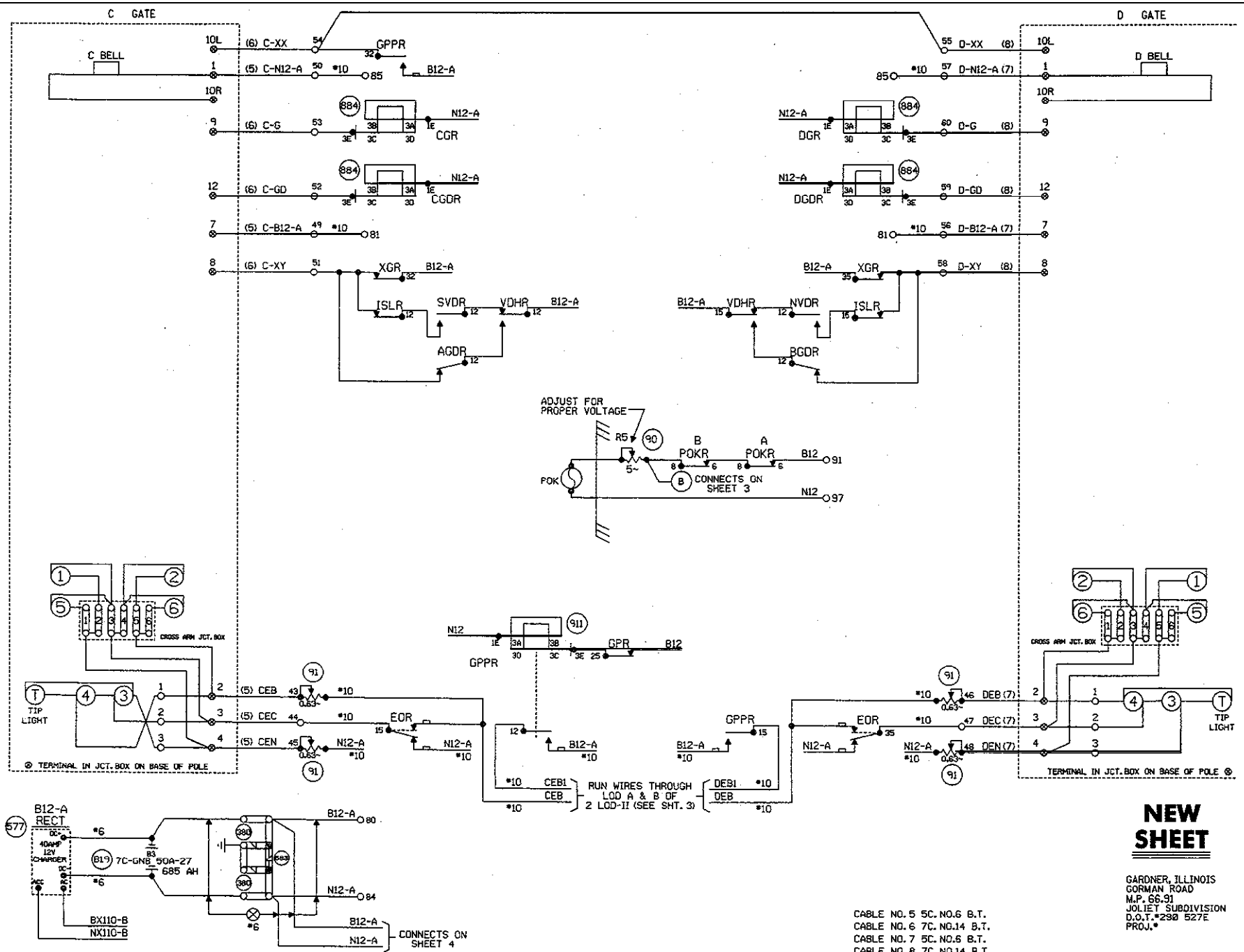

NEW SHEET

GARDNER, ILLINOIS
GORMAN ROAD
M.P. 66.91
JOLIET SUBDIVISION
D.O.T.#290 527E
PROJ.#

CABLE NO. 5 5C. NO.6 B.T.
CABLE NO. 6 7C. NO.14 B.T.
CABLE NO. 7 5C. NO.6 B.T.
CABLE NO. 8 7C. NO.14 B.T.

						5-1-01 UPGRADE CROSSING PROTECTION FOR THE HIGH SPEED RAIL PROJ. FROM MAZONIA TO SPRINGFIELD. AFE 00443BN JJF WITT/INM	MODIFICATION LEVEL		UNION PACIFIC SAFETY SIGNAL DESIGN
							Q.A. LAST LEVEL CHK'D.	DA	
							LAST LEVEL MOD. THIS TYP.	CZ	
							LAST LEVEL BY DESIGNER.	DD	
							CHANGED FROM TYP.? Y/N	Y	

DES. WITT,IND.	UNION PACIFIC RAILROAD JOLIET, ILLINOIS TO BLOOMINGTON, ILLINOIS C.T.C. CIRCUITS	DATE	5-1-0
DIG. WITT,IND.		SHEET	7
CHK. J.J.F.		DWG	66.9
A.F.E. 00443BN			RTE-C
ID: C&L66%L7X	OFFICE OF CHIEF ENG'R OMAHA, NEBR.		

(REV. 7-9-00) (4GTYP.6)

WCH 3597 EXIT GATE

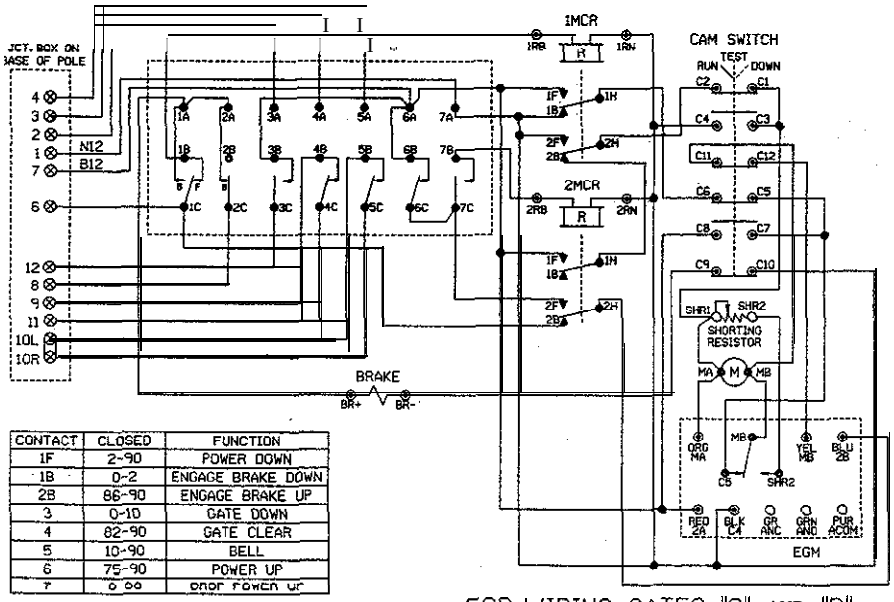

CONTACT	CLOSED	FUNCTION
1F	2-90	POWER DOWN
1B	0-2	ENGAGE BRAKE DOWN
2B	86-90	ENGAGE BRAKE UP
3	0-10	GATE DOWN
4	82-90	GATE CLEAR
5	10-90	BELL
6	75-90	POWER UP
7	0-80	PROP POWER UP

MECHANISM SHOWN IN CLEAR POSITION

FOR WIRING GATES "C" AND "D"

US&S MODEL 95 EXIT GATE

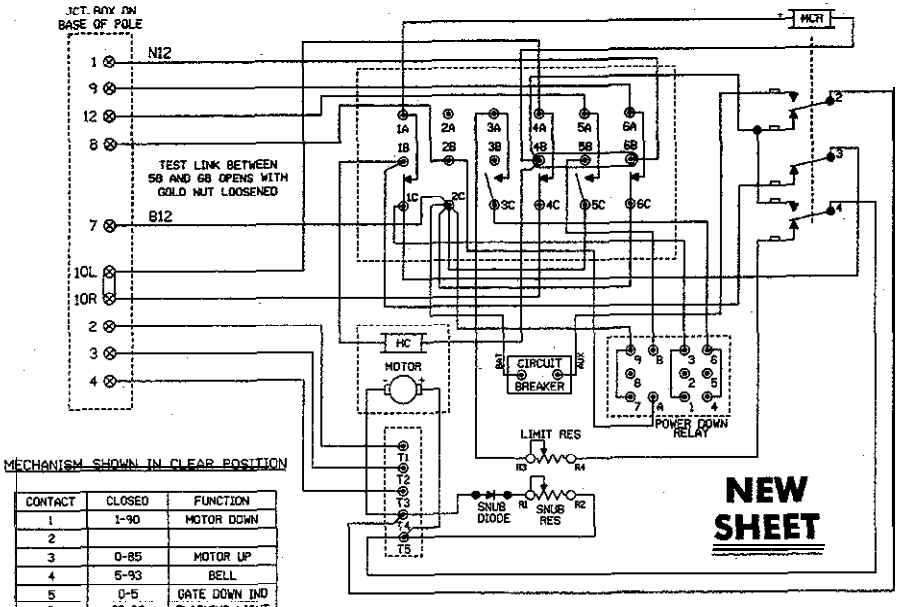

MECHANISM SHOWN IN CLEAR POSITION

CONTACT	CLOSED	FUNCTION
1	1-90	MOTOR DOWN
2		
3	0-85	MOTOR UP
4	5-93	BELL
5	0-5	GATE DOWN IND
6	83-90	FLASHING LIGHT

FOR WIRING GATES "C" AND "D"

WCH 3597 ENTRANCE GATE

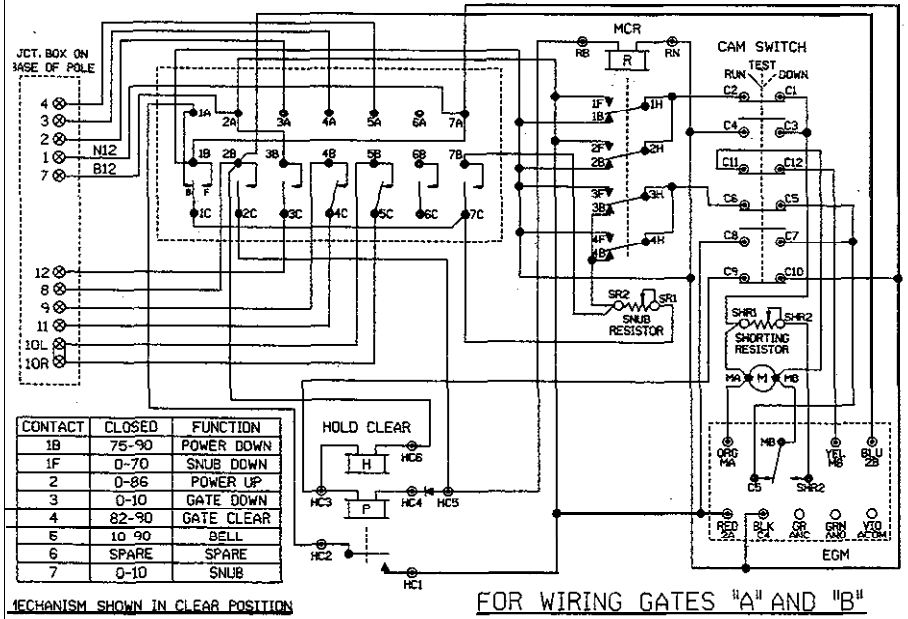

CONTACT	CLOSED	FUNCTION
1B	75-90	POWER DOWN
1F	0-70	SNUB DOWN
2	0-86	POWER UP
3	0-10	GATE DOWN
4	82-90	GATE CLEAR
5	10-90	BELL
6	SPARE	SPARE
7	0-10	SNUB

MECHANISM SHOWN IN CLEAR POSITION

FOR WIRING GATES "A" AND "B"

US&S MODEL 95 ENTRANCE GATE

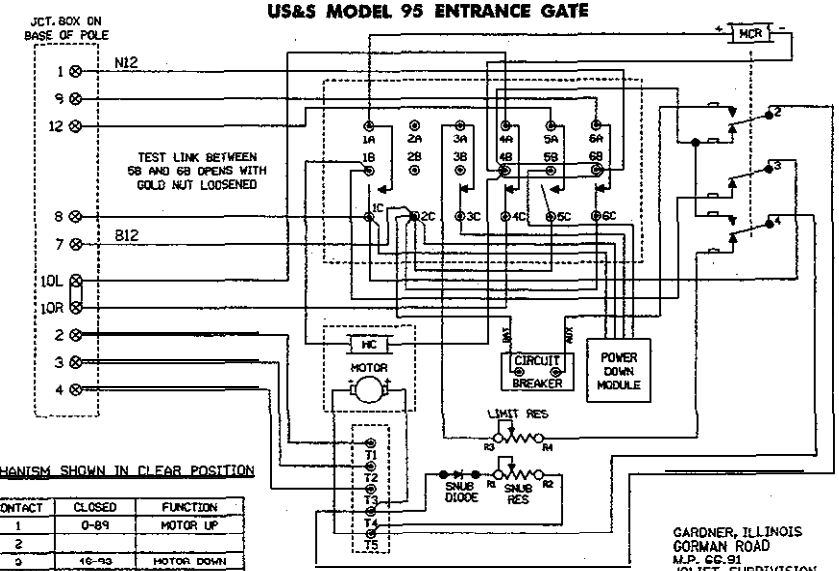

MECHANISM SHOWN IN CLEAR POSITION

CONTACT	CLOSED	FUNCTION
1	0-89	MOTOR UP
2		
3	16-93	MOTOR DOWN
4	5-93	BELL
5	0-5	GATE DOWN IND
6	83-90	FLASHING LIGHT

FOR WIRING GATES "A" AND "B"

GARDNER, ILLINOIS
GORMAN ROAD
M.P. 66.91
JOLIET SUBDIVISION
D.O.T.#290 527E
PROJ.#

5-1-01
UPGRADE CROSSING PROTECTION FOR THE HIGH SPEED RAIL PROJ. FROM MAZONIA TO SPRINGFIELD.
AFE 004438N JJF
WITT/JNM

MODIFICATION LEVEL	
Q.A. LAST LEVEL CHK'D.	DA
LAST LEVEL MOD. THIS TYP.	CZ
LAST LEVEL BY DESIGNER.	DO
CHANGED FROM TYP.? Y/N	Y

UNION PACIFIC
QUALITY PRODUCTIVITY SAFETY
SIGNAL DESIGN

DES: WITT.IND.
DIG: WITT.IND.
CHK: J.J.F.
A.F.E. 004438N
ID: CSL6691.8X

UNION PACIFIC RAILROAD
JOLIET, ILLINOIS TO
BLOOMINGTON, ILLINOIS
C.T.C. CIRCUITS

OFFICE OF CHIEF ENG'R OMAHA NEBR.

DATE 5-1-01
SHEET 8
DWG 66.91
RTE-CSL

(REV 7-9-00) (GWIRING.DGN)

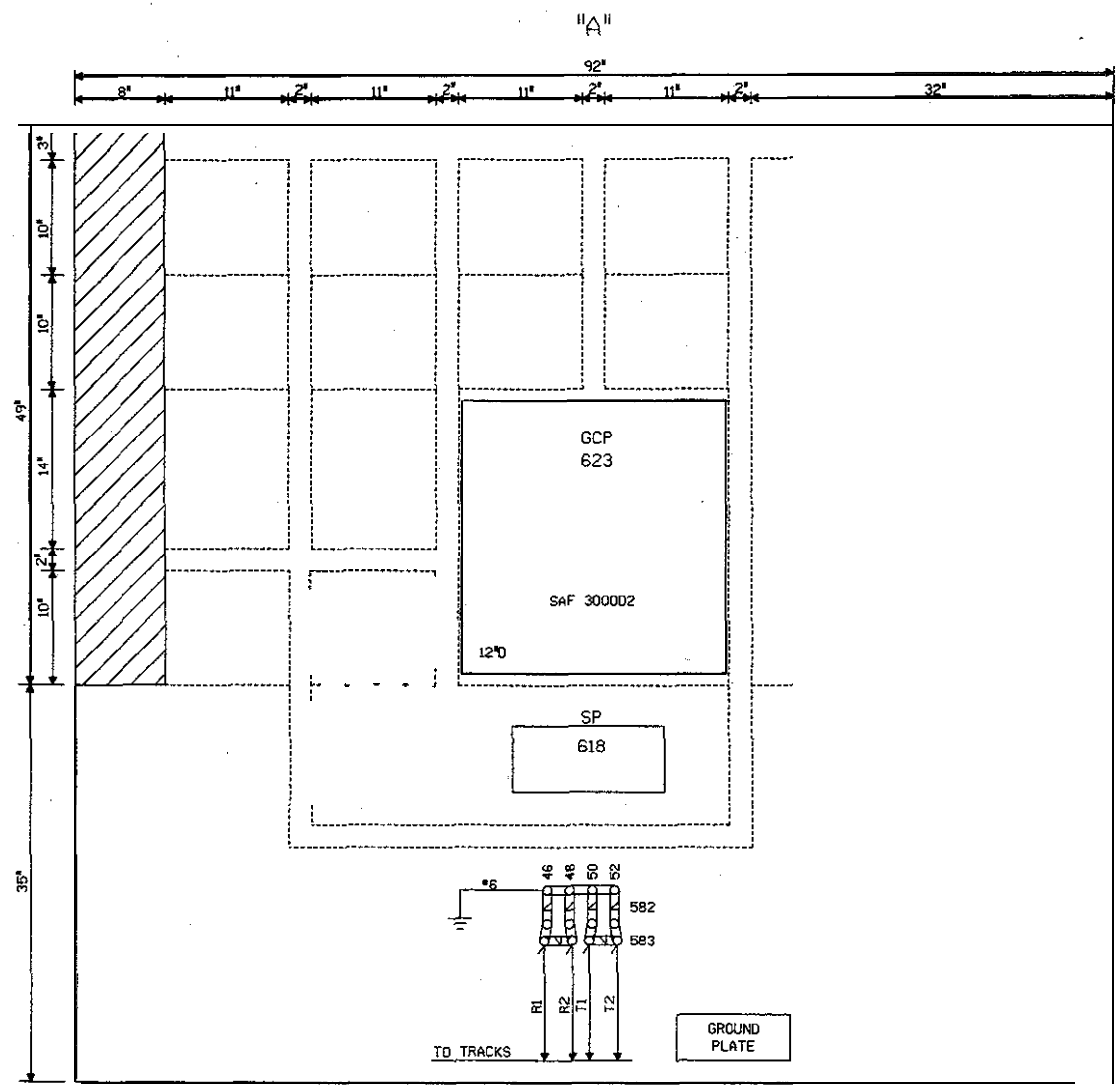

TWO CABLE ENTRANCES ON THIS WALL

NEW SHEET

0 1 2 3 4 FEET

SCALE: 1.5 INCHES = 1 FOOT

GARDNER, ILLINOIS
GORMAN ROAD
M.P.66.91
JOLIET SUBDIVISION
D.O.T.#290 572E
PROJ.#

5-1-01
UPGRADE CROSSING PROTECTION FOR THE HIGH SPEED RAIL PROJ. FROM MAZONIA TO SPRINGFIELD. AFE 00413BN JJF WITT/JNM

MODIFICATION LEVEL	
Q.A. LAST LEVEL CHK'D.	DA
LAST LEVEL MOD. THIS TYP.	CZ
LAST LEVEL BY DESIGNER.	DD
CHANGED FROM TYP.? Y/N	Y

UNION PACIFIC
SAFETY PRODUCTIVITY
SIGNAL DESIGN

DES: WITT.JND.
DIG: WITT.JND.
CHK: J.J.F.
A.F.E. 00413BN
ID= CSL6691.9X

UNION PACIFIC RAILROAD
JOLIET, ILLINOIS TO
BLOOMINGTON, ILLINOIS
C.T.C. CIRCUITS
OFFICE OF CHIEF ENG'R OMAHA NEBR.

DATE 5-1-01
SHEET 9
DWG 66.91
RTE-CSL

(REV. 7-9-00) (HOUSE.TYP)

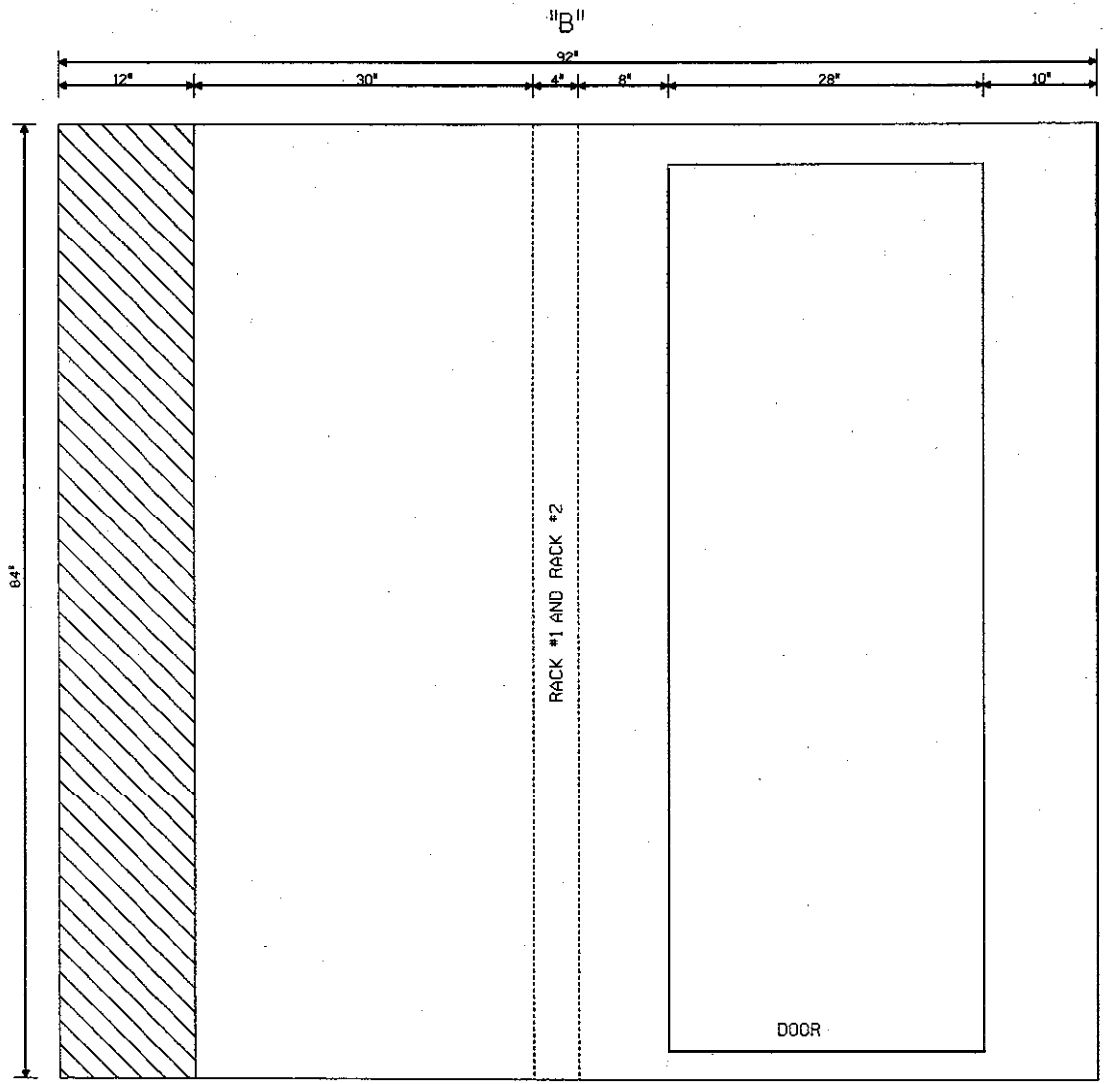

PLAN VIEW
8'x8' HOUSE
—NO SCALE—

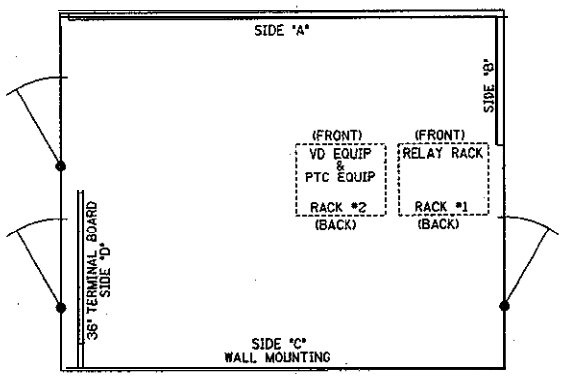

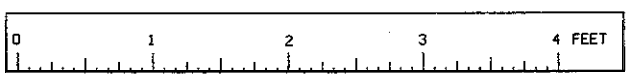

SCALE: 1.5 INCHES = 1 FOOT

N E W

S H E E T

GARDNER, ILLINOIS
GORMAN ROAD
M.P.66.91
JOLIET SUBDIVISION
D.O.T.#290 572E
PROJ.#

5-1-01 UPGRADE CROSSING PROTECTION FOR THE HIGH SPEED RAIL PROJ. FROM MAZONIA TO SPRINGFIELD. AFE 00443BN JJF WITT/JNM	MODIFICATION LEVEL		UNION PACIFIC SIGNAL DESIGN	DES: WITT.JNO.	UNION PACIFIC RAILROAD JOLIET, ILLINOIS TO BLOOMINGTON, ILLINOIS C.T.C. CIRCUITS OFFICE OF CHIEF ENG'R OMAHA NEBR.	DATE 5-1-01
	Q.A. LAST LEVEL CHK'D.	DA		DIG: WITT.JNO.		SHEET 10
	LAST LEVEL MOD. THIS TYP.	CZ		CHK: J.J.F.		DWG 66.91
	LAST LEVEL BY DESIGNER.	DD		A.F.E. 00443BN		RTE-CSL
	CHANGED FROM TYP.? Y/N	Y		ID= CSL6691.10X		

(REV 7-9-00) (HOUSE.TYP)

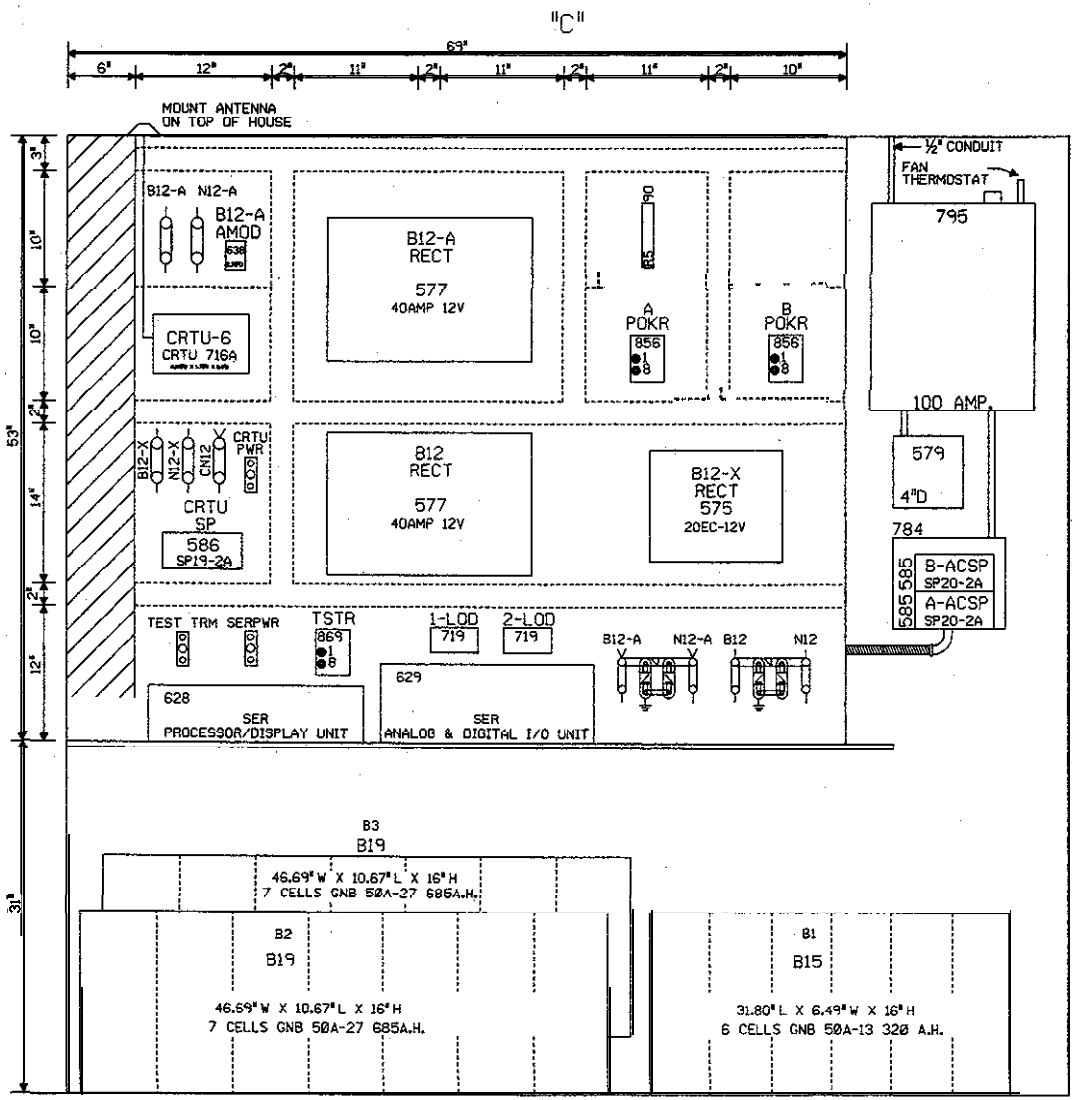

SCALE: 1.5 INCHES = 1 FOOT

N E W

S H E E T

GARDNER, ILLINOIS
GORMAN ROAD
M.P.66.91
JOLIET SUBDIVISION
D.O.T.#290 572E
PROJ.#

5-1-01 UPGRADE CROSSING PROTECTION FOR THE HIGH SPEED RAIL PROJ. FROM MAZONIA TO SPRINGFIELD. AFE 004438N. JJF WITT/JNM	MODIFICATION LEVEL		UNION PACIFIC SAFETY SIGNAL DESIGN	DES: WITT,JND.	UNION PACIFIC RAILROAD JOLIET, ILLINOIS TO BLOOMINGTON, ILLINOIS C.T.C. CIRCUITS	DATE 5-1-01	
	Q.A. LAST LEVEL CHK'D.	DA		DIG: WITT,JND.		SHEET 11	
	LAST LEVEL MOD. THIS TYP.	CZ		CHK: J.J.F.		DWG 66.91	
	LAST LEVEL BY DESIGNER.	DD		A.F.E. 004438N		RTE-CSL	
	CHANGED FROM TYP.? Y/N	Y		ID: CSL6691.11X	OFFICE OF CHIEF ENG'R OMAHA NEBR.		

(REV. 7-9-00) (HOUSE.TYP)

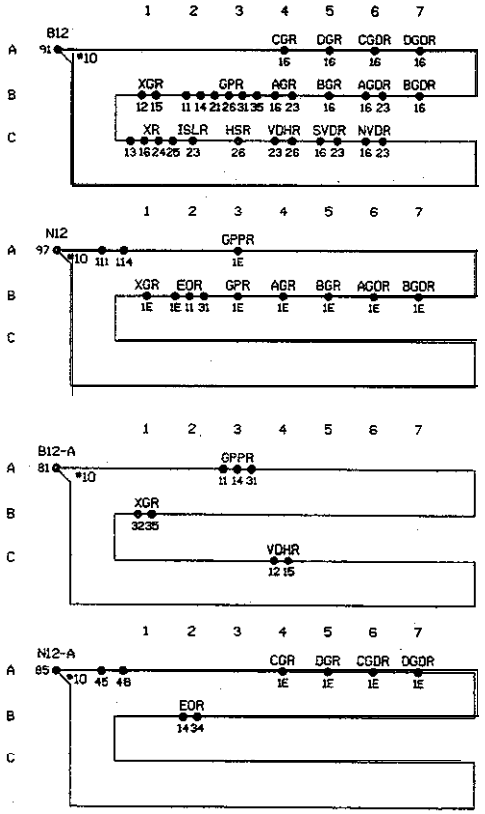

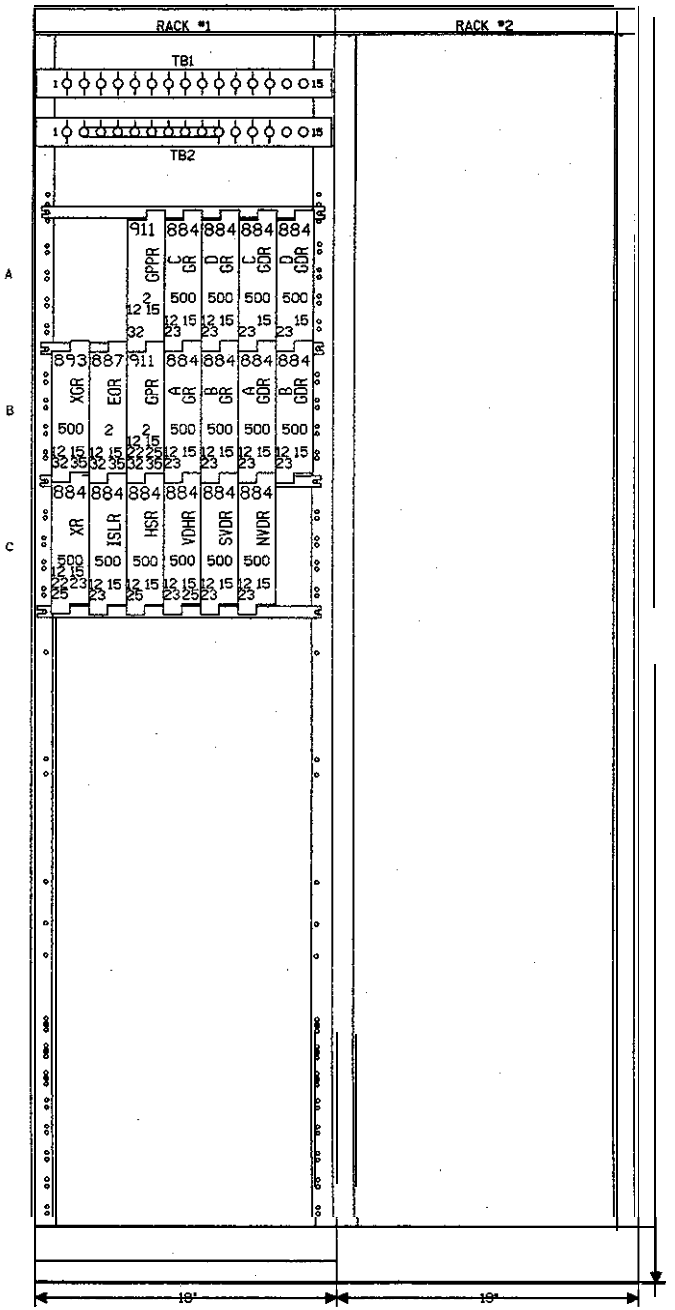

NEW SHEET

GARDNER, ILLINOIS
GORMAN ROAD
M.P.66.91
JOLIET SUBDIVISION
D.O.T.#290 527E
PROJ.#

5-1-01 UPGRADE CROSSING PROTECTION FOR THE HIGH SPEED RAIL PROJ. FROM MAZONIA TO SPRINGFIELD. AFE 004438N JJF WITT/JNM	MODIFICATION LEVEL		UNION PACIFIC QUALITY PRODUCTIVITY SAFETY SIGNAL DESIGN	DES: WITT.IND. DIG: WITT.IND. CHK: J.J.F. A.F.E. 004438N ID= CSL6691.12X	UNION PACIFIC RAILROAD JOLIET, ILLINOIS TO BLOOMINGTON, ILLINOIS C.T.C. CIRCUITS OFFICE OF CHIEF ENG'R OMAHA NEBR.	DATE 5-1-01 SHEET 12 DWG 66.91 RTE-CSL
	Q.A. LAST LEVEL CHK'D.	DA				
	LAST LEVEL MOD. THIS TYP.	CZ				
	LAST LEVEL BY DESIGNER.	DD				
	CHANGED FROM TYP.? Y/N	Y				

(REV. 7-9-00) (HOUSE.TYP)

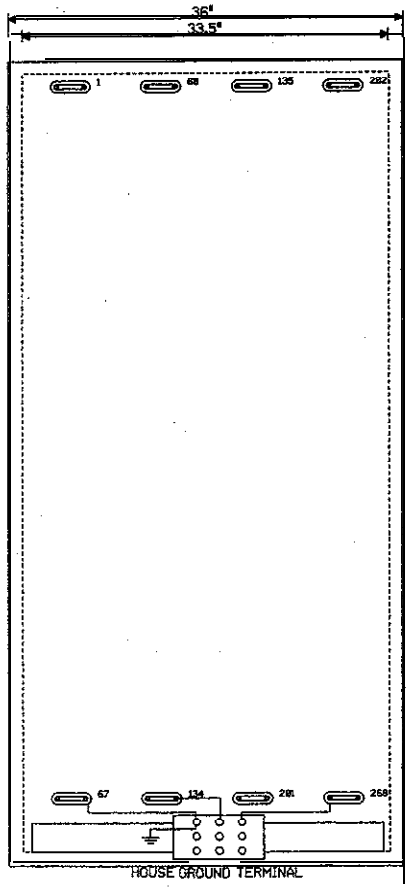

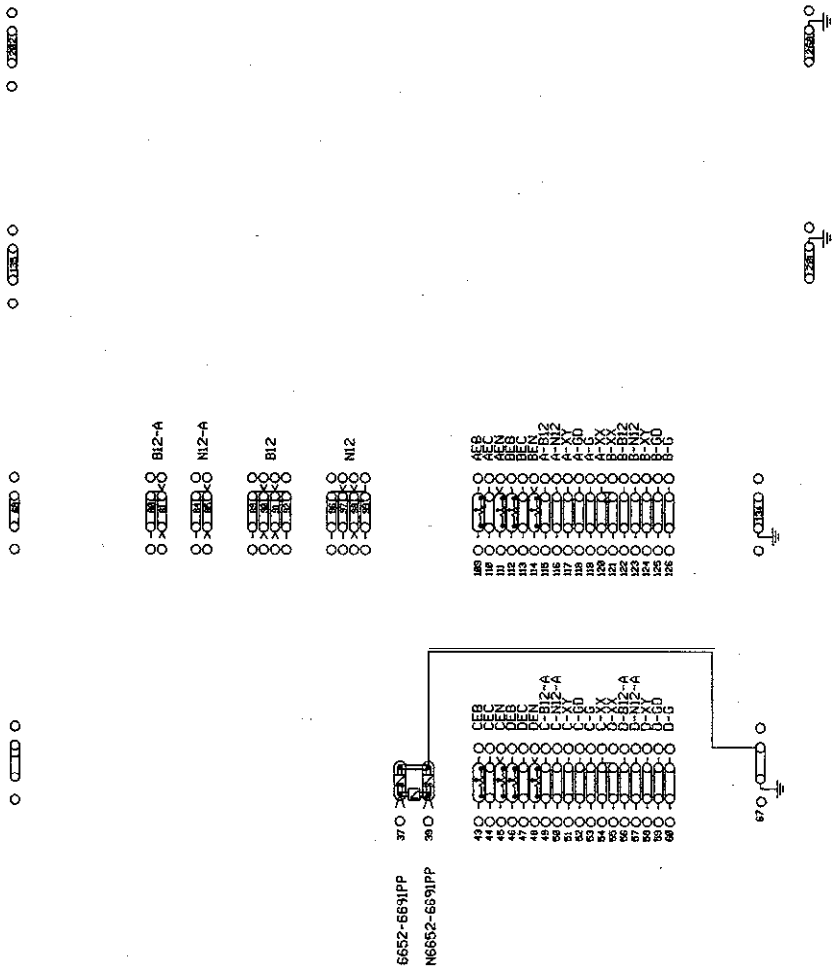

NEW SHEET

0 1 2 3 4 FEET

SCALE: 1.5 INCHES = 1 FOOT

GARDNER, ILLINOIS
GORMAN ROAD
M.P.66.91
JOLIET SUBDIVISION
D.O.T.#290 527E
PROJ.#

5-1-01
UPGRADE CROSSING PROTECTION FOR THE HIGH SPEED RAIL PROJ. FROM MAZONIA TO SPRINGFIELD.
AFE D04438N
JJF
WITT/JNM

MODIFICATION LEVEL	
Q.A. LAST LEVEL CHK'D.	DA
LAST LEVEL MOD. THIS TYP.	CZ
LAST LEVEL BY DESIGNER.	DD
CHANGED FROM TYP.? Y/N	Y

UNION PACIFIC
QUALITY PRODUCTIVITY SAFETY
SIGNAL DESIGN

DES:	WITT,JNO.
DIG:	WITT,JNO.
CHK:	J.J.F.
A.F.E.	D04438N
ID=	CSL6691J3X

UNION PACIFIC RAILROAD
JOLIET, ILLINOIS TO BLOOMINGTON, ILLINOIS
C.T.C. CIRCUITS
OFFICE OF CHIEF ENG'R OMAHA NEBR.

DATE	5-1-01
SHEET	13
DWG	66.91
	RTE-CSL

(REV. 7-9-00) (HOUSE.TYP)

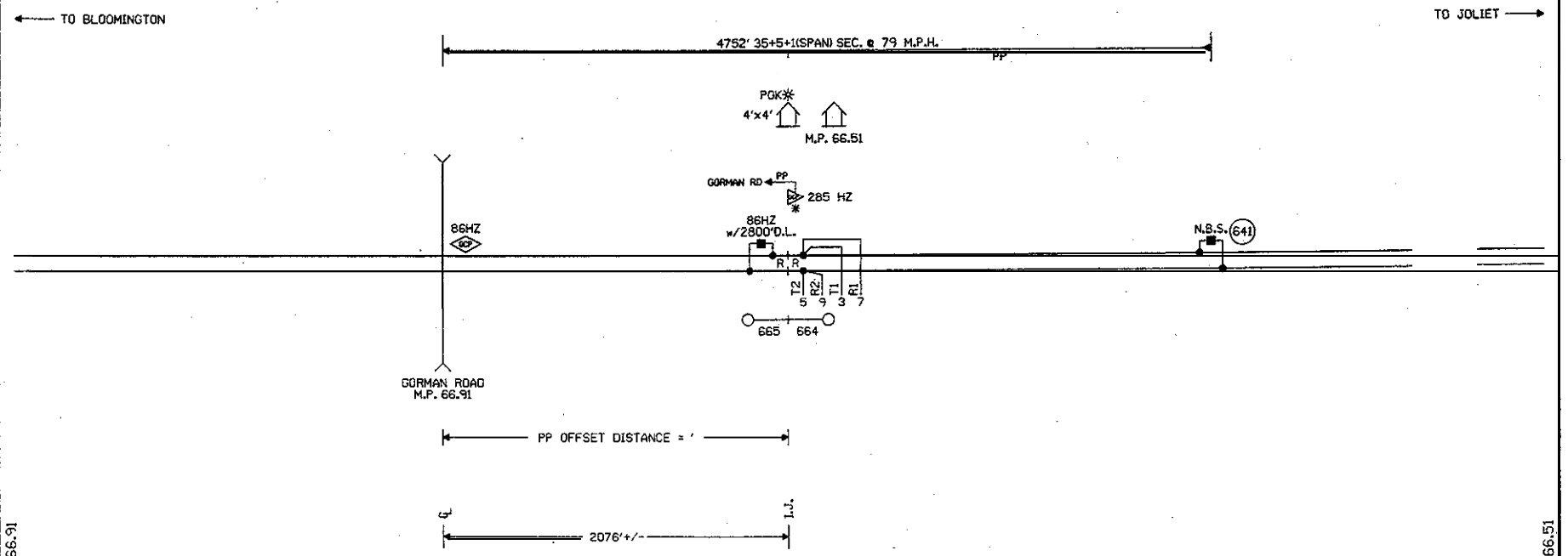

CONNECTS TO DRAWING 66.91

CONNECTS TO DRAWING 66.51

NOTES:

⊗ = TWISTED WIRES
ALL TRACK WIRES 2C. #6
INSULATED 1 TWIST PER FT.

TRANSMITTER AND RECEIVER LEADS TO BE SEPARATED BY AT LEAST 12" IN TRENCH. LENGTHS SHOULD NOT EXCEED MANUFACTURES RECOMMENDATION.

ALL BUNGALOW WIRING TO BE #16 AWG FLEX UNLESS OTHERWISE SPECIFIED EXCEPT ALL GROUND WIRE TO BE #6 AWG FLEX OR LARGER.

REFER TO UP STANDARD DWG. FOR BUNGALOW GROUNDING.

✱ = GCP IS WIRED AS A SEMI-BIDIRECTIONAL UNIT

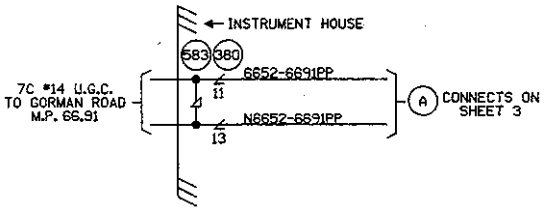

N E W

S H E E T

GARDNER, ILLINOIS
REMOTE GCP LOCATION
M.P. 66.52
JOLIET SUBDIVISION
PROJ.#

S ⟷ N

					5-1-01 UPGRADE CROSSING PROTECTION FOR THE HIGH SPEED RAIL PROJ. FROM MAZONIA TO SPRINGFIELD. AFE 00443BN JJF WITT/JNM	MODIFICATION LEVEL		UNION PACIFIC SAFETY QUALITY PRODUCTIVITY SIGNAL DESIGN	DES: WITT.IND.	UNION PACIFIC RAILROAD JOLIET, ILLINOIS TO BLOOMINGTON, ILLINOIS C.T.C. CIRCUITS	DATE 5-1-01
						Q.A. LAST LEVEL CHK'D.	DA		DIG: WITT.IND.		SHEET 1
						LAST LEVEL MOD. THIS TYP.	CZ		CHK: J.J.F.		DWG 66.52
						LAST LEVEL BY DESIGNER.	DD		A.F.E. 00443BN		RTE-CS
						CHANGED FROM TYP.? Y/N	Y		ID= CSL6652.1X	OFFICE OF CHIEF ENG'R OMAHA NEBR.	

(REV. 7-9-00) (REMOTE.1)

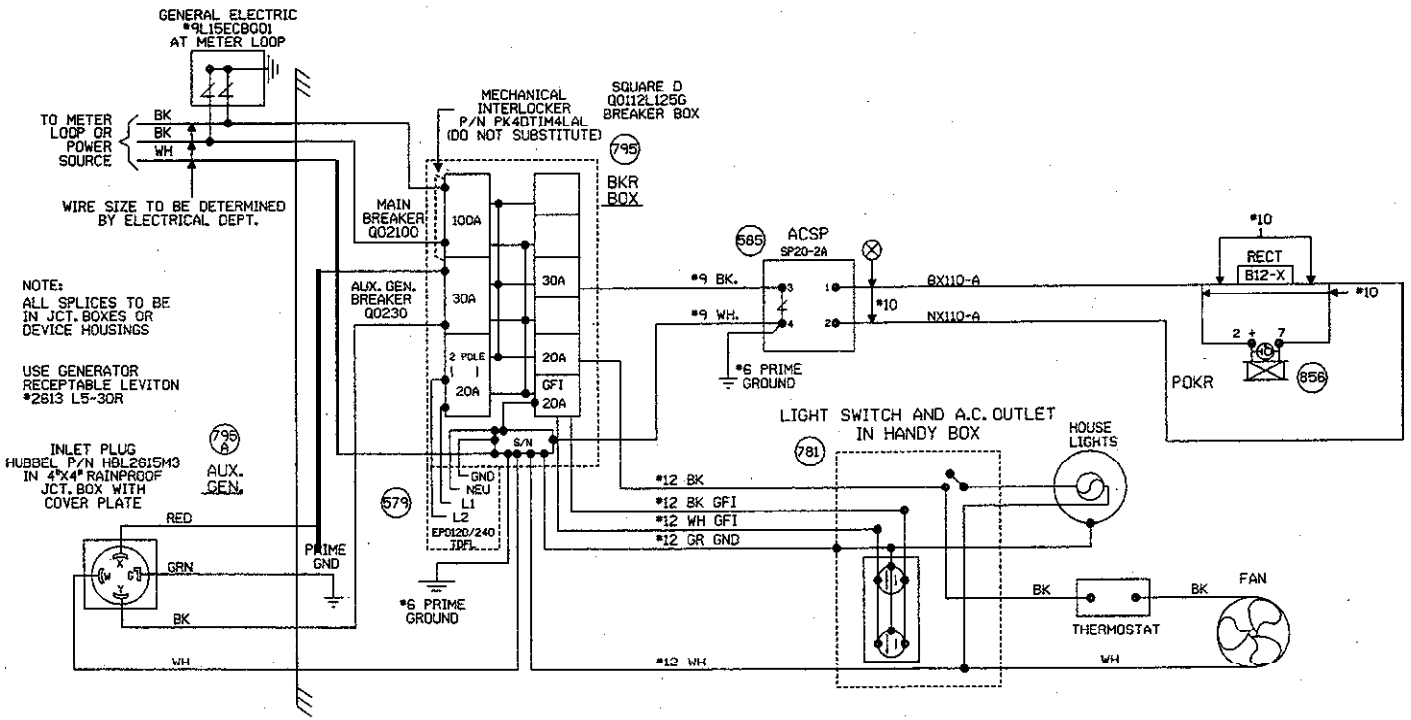

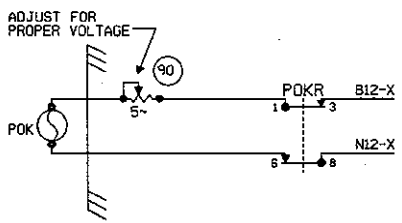

N E W

S H E E T

GARDNER, ILLINOIS
REMOTE GCP LOCATION
M.P. 66.52
JOLIET SUBDIVISION
PROJ.#

					5-1-01 UPGRADE CROSSING PROTECTION FOR THE HIGH SPEED RAIL PROJ. FROM MAZOMA TO SPRINGFIELD. AFE 004438N JJF WITT/JNM	MODIFICATION LEVEL	
						Q.A. LAST LEVEL CHK'D.	DD
						LAST LEVEL MOD. THIS TYP.	OB
						LAST LEVEL BY DESIGNER.	DD
						CHANGED FROM TYP.? Y/N	N

UNION PACIFIC — QUALITY PRODUCTIVITY SAFETY — SIGNAL DESIGN

DES: WITT.IND.	
DIG: WITT.IND.	
CHK: J.J.F.	
A.F.E. 004438N	
ID= CSL6652.2X	

UNION PACIFIC RAILROAD
JOLIET, ILLINOIS TO BLOOMINGTON, ILLINOIS
C.T.C. CIRCUITS
OFFICE OF CHIEF ENG'R OMAHA NEBR.

DATE	5-1-01
SHEET	2
DWG	66.52
	RTE-CSL

0

NOTE:
THIS DRAWING WAS DESIGNED FOR A SPECIFIC APPLICATION. IF A MODIFICATION OR REDESIGN OF THIS DRAWING CAUSES ANY MODULES TO CHANGE, THE UNIT'S PART NUMBER MUST BE CHANGED TO CORRESPOND ACCORDINGLY.

0

NOTE:
EACH TRANSMITTER TO RAIL WIRE FROM TB1-1 AND TB1-2 MUST NOT EXCEED THE MAXIMUM LENGTH SPECIFIED IN THE TABLE SHOWN BELOW. THE RECEIVER WIRE LENGTH IS NOT CRITICAL. DOES NOT APPLY TO 6 TRACK WIRE APPLICATION.

"Mf" FREQUENCY (HZ)	MAXIMUM TRANSMIT WIRE LENGTH (FEET)
86	100
114	125
156	150
211	200
285-970	250

NEW SHEET

GARDNER, ILLINOIS
GCP REMOTE LOCATION
M.P. 66.52
JOLIET SUBDIVISION
PROJ.*

5-1-01
UPGRADE CROSSING PROTECTION FOR THE HIGH SPEED RAIL PROJ. FROM MAZONIA TO SPRINGFIELD. AFE 004438N JJF WITT/JNM

MODIFICATION LEVEL	
G.A. LAST LEVEL CHK'D.	DA
LAST LEVEL MOD. THIS TYP.	CZ
LAST LEVEL BY DESIGNER.	DD
CHANGED FROM TYP.? Y/N	Y

UNION PACIFIC SIGNAL DESIGN
DES: WITT.JNB.
DIG: WITT.JNB.
CHK: J.J.F.
A.F.E. 004438N
ID: GGL6652.GK

UNION PACIFIC RAILROAD
JOLIET, ILLINOIS TO BLOOMINGTON, ILLINOIS
C.T.C. CIRCUITS
OFFICE OF CHIEF ENG'R OMAHA NEBR.

DATE 5-1-01
SHEET 3
DWG 66.52
RTE-CSL

(REV 7-9-00) (3K1TKBG.DGN)

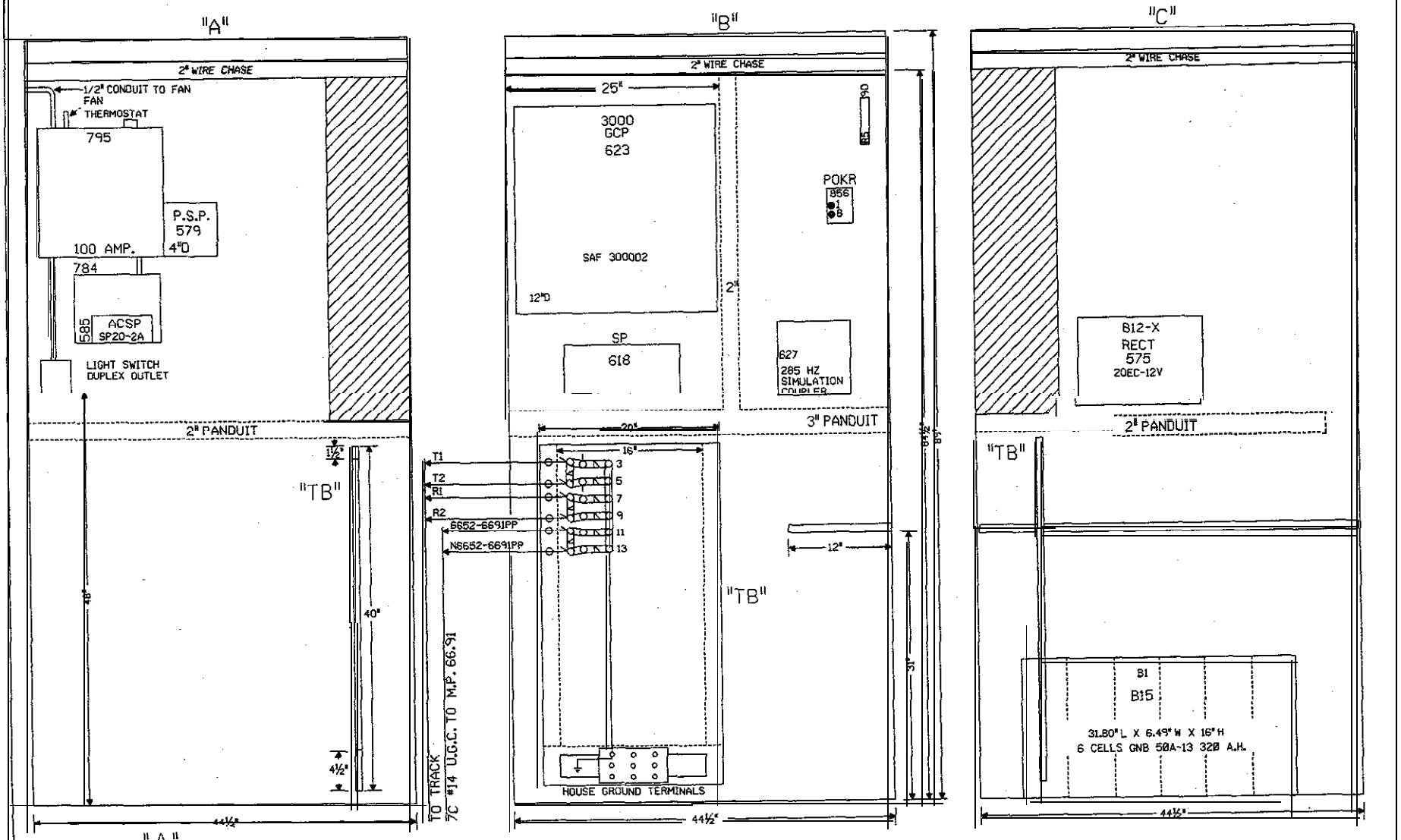

NOTE: ALL DIMENSIONS SHOWN ARE APPROXIMATE.

0 1 2 3 4 FEET

SCALE: 1.5 INCHES = 1 FOOT

NEW SHEET

GARDNER, ILLINOIS
REMOTE CCP LOCATION
M.P.66.52
JOLIET SUBDIVISION
PROJ#

5-1-01
UPGRADE CROSSING PROTECTION FOR THE HIGH SPEED RAIL PROJ. FROM MAZONIA TO SPRINGFIELD.
AFE 004438R JJF
WITT/JNM

MODIFICATION LEVEL	
Q.A. LAST LEVEL CHK'D.	00
LAST LEVEL MOD. THIS TYP.	08
LAST LEVEL BY DESIGNER.	00
CHANGED FROM TYP.? Y/N	Y

UNION PACIFIC
SIGNAL DESIGN

DES:	WITT/JNO.
DTG:	WITT/JNO.
CHK:	J.J.F.
A.F.E.	004438R
ID=	CSL6652.4X

UNION PACIFIC RAILROAD
JOLIET, ILLINOIS TO
BLOOMINGTON, ILLINOIS
C.T.C. CIRCUITS
OFFICE OF CHIEF ENG'R OMAHA NEBR.

DATE 5-1-01
SHEET 4
DWG 66.52
RTE-CSL