COPY
RECEIVED
JUN 11 2001
Illinois Commerce Commission
RAIL SAFETY SECTION

Form 3

STATE OF ILLINOIS

ILLINOIS COMMERCE COMMISSION

Petition for permission to make a major change in crossing Protection, or to install new protection under 92 Illinois Administrative Code 1535.400(d)

Date: June 7, 2001

X-11651

T01-0038

To the Illinois Commerce Commission:

The petitioner, Union Pacific Railroad Company shows

(1) That it is a railroad company operating a line of railroad in the State of Illinois.

(2) That petitioner proposes and hereby makes application for authority to make a major change in crossing protection, or to install new protection, under 92 Illinois Administrative Code 1535.400(d) adopted by this Commission.

(3) That the location of the crossing, the nature of protection now established and proposed to be established, and other pertinent facts in connection therewith, are set forth in the statement attached to and forming part of this petition.

(4) That petitioner's reasons and purpose, with reference to its said proposal are to install 4-quad Flashing Light Signals, Gates, and Constant Warning Time Circuitry.

(5) That the facts set forth in this petition and in the statement and plans or plats attached thereto, are, all of them, true and correct to the best of petitioner's knowledge and belief.

WHEREFORE, the petitioner prays that the Commission will, if deemed desirable by the Commission, set the aforesaid matter for hearing, and that the Commission enter an order or adopt a resolution consenting to and granting authority for the making of the said proposed changes in or additions to crossing protection.

UNION PACIFIC RAILROAD COMPANY

By Andrew Murphy

Andrew Murphy
UPRR Industry & Public Projects

DOCKETED

Statement, attached to and part of an application for permission to make a major change in crossing protection or to install new protection, under 92 Ill. Adm. Code 1535.400(d).

1. Name of railroad company: **Union Pacific Railroad Company**

2. Crossing Number: **290 522V**

3. Village or City: **Gardner**

4. Name of Street or Highway: **Main Street**

5. Public Agency Maintaining Highway: **City of Gardner**

6. Protection now established: **Gates**

7. Protection desired: **4-quad gates & constant warning circuits**

8. Number of main tracks: **1** Other tracks:

9. Number of passenger train movements: 6 am to 6 pm: **3**
6 pm to 6 am: **3**

10. Number of freight train movements: 6 am to 6 pm: **1**
6 pm to 6 am: **0**

11. Approximate Number of switch moves: 6 am to 6 pm: **0**
6 pm to 6 am: **0**

12. Maximum speed of trains at crossing on each track in each direction: **79 MPH**

13. Passenger platforms served by tracks within the limits of track circuits: **NONE**

14. Where automatic signals or gates are proposed, approximate number of train or engine movements daily which would cause false indications or operations: **NONE**

15. In addition to the information listed herein before in Form 3, attach a track plan or the plat of the proposed crossing. This plan should show:

(a) Width of surface or highway.
(b) Highway intersections (including private driveways to be so indicated) and location of established highway signs or signals within 100 feet of crossing.
(c) Location of tracks, switches, and other railroad facilities such as block signals, etc. within limits of track circuits, present and/or proposed.
(d) Where automatic protection is proposed, show proposed location of signals (side lights, cantilevers, etc., if any).
(e) Show the length of each operating track section within the control limits of the crossing protection and its function.

ADDITIONAL INFORMATION

VERIFICATION

I, Andrew T. Murphy, first being duly sworn upon oath depose and say that I am **Engineering Inspector-Industry & Public Projects of Union Pacific Railroad Company**, a Delaware Corporation; that I have read the above and foregoing petition by me subscribed and know the contents thereof; that said comments are true in substance and in fact, except as to those matters stated upon information and belief, and as to those, I believe same to be true.

Union Pacific Railroad Company

By Andrew Murphy

Andrew T. Murphy
UPRR Industry & Public Projects

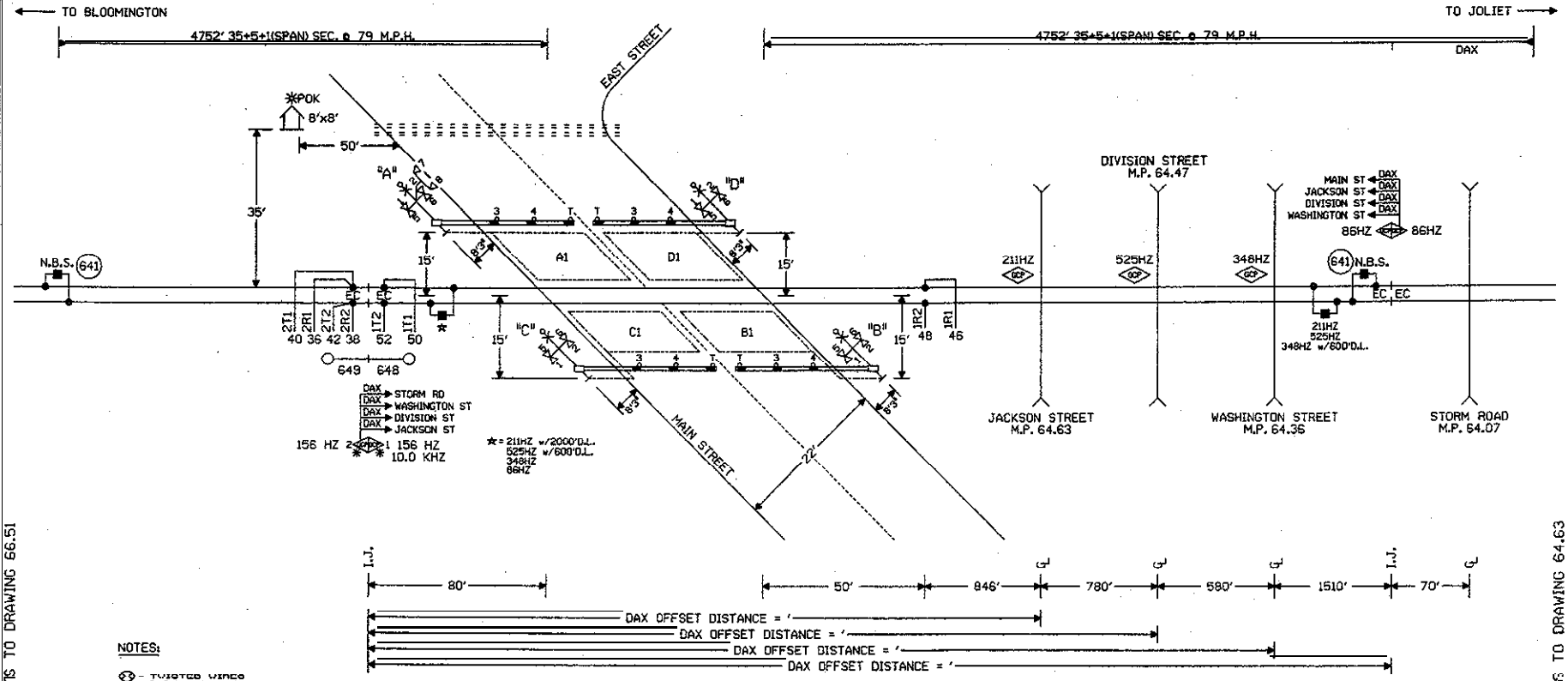

NOTES:

⊗ - TWISTED WIRES
INSULATED 1 TWIST PER FT.
ALL TRACK WIRES 2C. #6

TRANSMITTER AND RECEIVER LEADS TO BE SEPARATED BY AT LEAST 12" IN TRENCH, LENGTHS SHOULD NOT EXCEED MANUFACTURES RECOMMENDATION.

TOP OF FOUNDATION TO BE AT SAME ELEVATION AS THE SURFACE OF THE TRAVELED WAY & NO MORE THAN 4" ABOVE THE SURFACE OF THE GROUND.

ALL BUNGALOW WIRING TO BE #16 AWG FLEX UNLESS OTHERWISE SPECIFIED EXCEPT ALL GROUND WIRE TO BE #6 AWG FLEX OR LARGER.

ALL WIRING IN GATE MECHANISM TO BE #10 AWG FLEX.

REFER TO UP STANDARD DWG FOR BUNGALOW GROUNDING.

DO NOT USE 7 CELLS OF B12 BATTERY UNLESS REQUIRED TO MAINTAIN MINIMUM LAMP VOLTAGE.

ALL LIGHTS TO BE 12" ROUNDELS.

= = = = = = 4" X 90' CONDUIT

LIGHTS: LED LIGHTS

GATE A,C: 26'
GATE B,D: 26'

CATU MICROBURST

✱ = WIRE GCP AS A SEMI-BIDIRECTIONAL UNIT

EXIT GATE MANAGEMENT SYSTEM (EGMS) LOOP LOCATION:

1.) 12" FROM CONCRETE CROSSING PANEL. MAY VARY FROM 6" TO 12" DEPENDING ON PAVEMENT QUALITY.
2.) 2' FROM CROSSING CENTERLINE.
3.) 3.5' FROM GATE ARM.
4.) 2' FROM THE EDGE OF THE TRAVELED WAY. MAY BE INCREASED UP TO A MAXIMUM OF 5' WHERE AN IMPROVED SHOULDER OR OTHER EXISTS.
5.) MAXIMUM LOOP WIDTH NOT TO EXCEED 12' AND MINIMUM WIDTH NOT TO BE LESS THAN 3'.

——— = EGMS LOOP

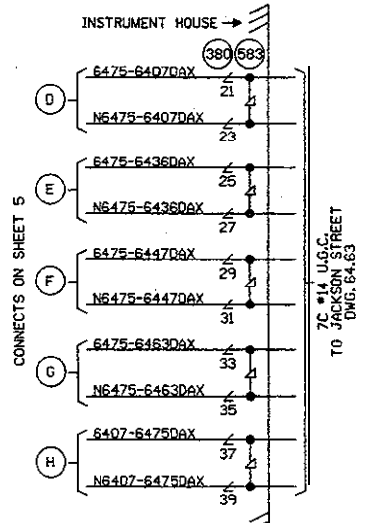

S ←—○—→ N

NEW SHEET

GARDNER, ILLINOIS
MAIN STREET
M.P. 64.75
JOLIET SUBDIVISION
D.O.T.#290 522V
PROJ.#

5-1-01 UPGRADE CROSSING PROTECTION FOR THE HIGH SPEED RAIL PROJ. FROM MAZONIA TO SPRINGFIELD. AFE 004438P JJF WITT./JNM	MODIFICATION LEVEL		UNION PACIFIC	DES: WITT.JND.	UNION PACIFIC RAILROAD JOLIET, ILLINOIS TO BLOOMINGTON, ILLINOIS C.T.C. CIRCUITS	DATE 5-1-01	
	D.A. LAST LEVEL CHK'D.	DA		DWG: WITT.JND.		SHEET 1	
	LAST LEVEL MOD. THIS TYP.	CZ		CHK: J.J.F.		DWG 64.75	
	LAST LEVEL BY DESIGNER.	DD		A.F.E. 004438P		RTE-CSL	
	CHANGED FROM TYP.? Y/N	Y	SIGNAL DESIGN	ID: CSL6475.IX	OFFICE OF CHIEF ENGR. OMAHA NEBR.		

(REV. 7-9-00) (1TKBG.1)

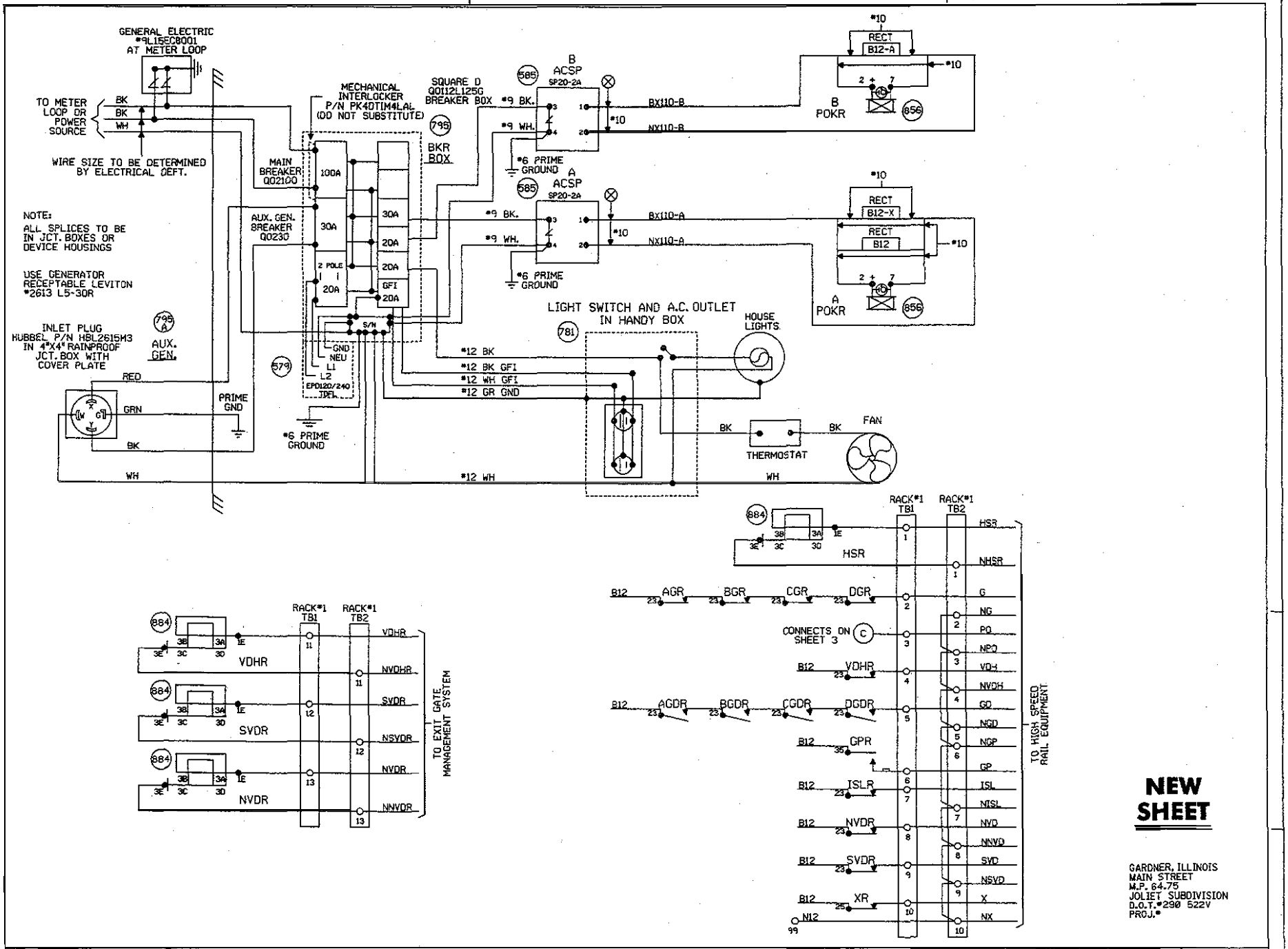

NEW SHEET

GARDNER, ILLINOIS
MAIN STREET
M.P. 64.75
JOLIET SUBDIVISION
D.O.T.#290 522V
PROJ.#

				5-1-01 UPGRADE CROSSING PROTECTION FOR THE HIGH SPEED RAIL PROJ. FROM MAZONIA TO SPRINGFIELD. AFE 004438P JJF WITT/JNM	MODIFICATION LEVEL		UNION PACIFIC SIGNAL DESIGN	DES: WITT.JNO. DIG: WITT.JNO. CHK: J.J.F. A.F.E. 004438P ID= CSL6475.2X	UNION PACIFIC RAILROAD JOLIET, ILLINOIS TO BLOOMINGTON, ILLINOIS C.T.C. CIRCUITS OFFICE OF CHIEF ENG'R OMAHA NEBR.
					Q.A. LAST LEVEL CHK'D.	DA			
					LAST LEVEL MOD. THIS TYP.	CZ			
					LAST LEVEL BY DESIGNER.	DO			
					CHANGED FROM TYP.2 Y/N	Y			

DATE 5-1-01
SHEET 2
DWG 64.75
RTE-CSL

(REV. 7-9-00) (HCA4G.2)

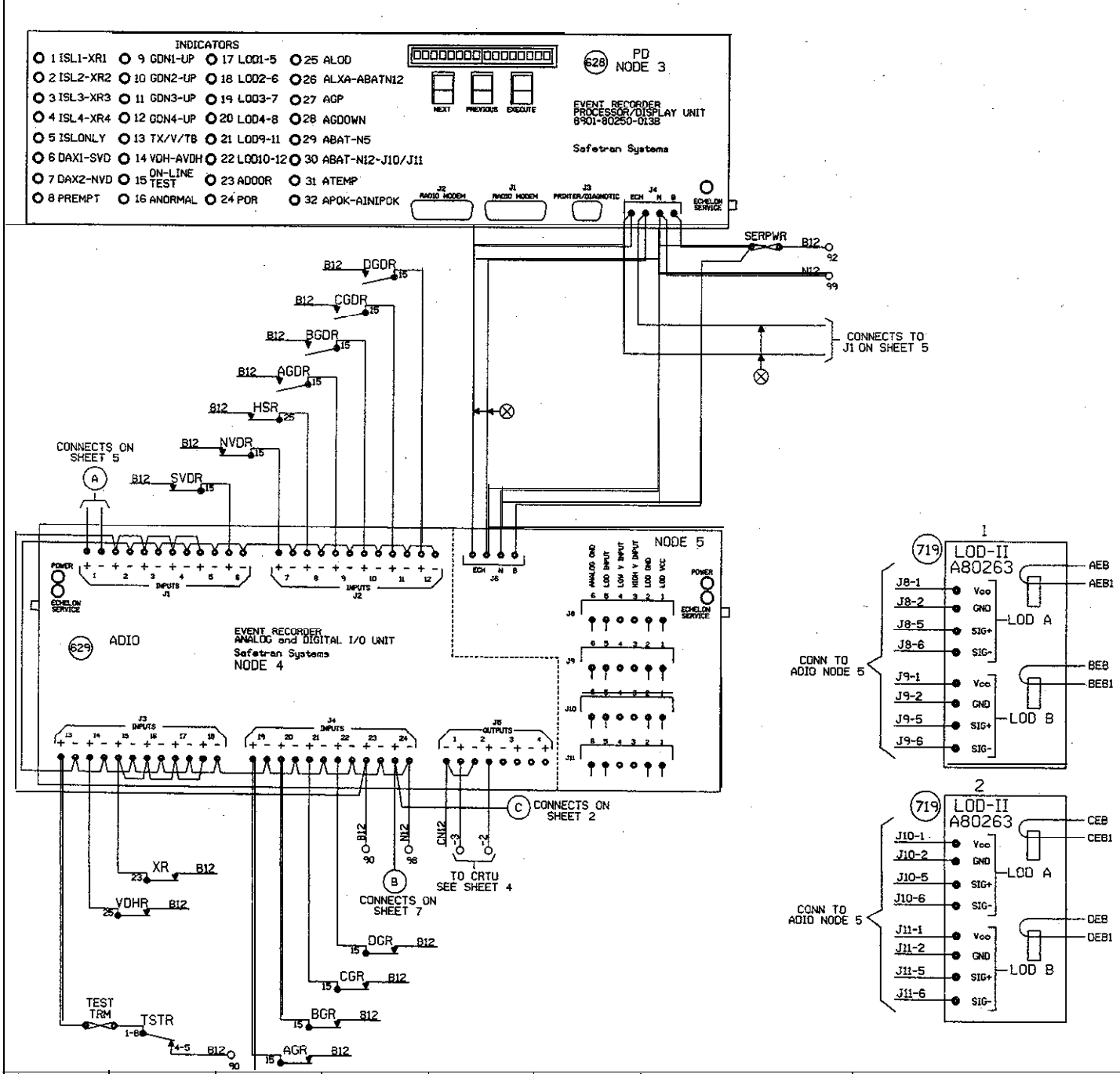

NODE #4
DIGITAL INPUTS:
1.ISL1
2.ISL2
3.ISL3
4.ISL4
5.ISONLY
6.DAX1-SVD
7.DAX2-NVD
8.PREMPT
9.GDWN1
10.GDWN2
11.GDWN3
12.GDWN4
13.TX/V/TB
14.VDH
15.XR1
16.XR2
17.XR3
18.XR4
19.GP1
20.GP2
21.GP3
22.GP4
23.POK/DO
24.POR

NODE #4
DIGITAL OUTPUTS:
J5-1 ALRM1
J5-2 ALRM2
J5-3 HEALTH
J5-4 DOORBUZ

NODE #5
ANALOG INPUTS:
J8-LOD1
J9-LOD2
J10-LOD3
J11-LOD4
N8-BATT5

GCP NODES:
6 GCP NORMAL
16 GCP STANDBY

SER NOTES:
1. JUMPER ALL UNUSED DIGITAL "+" INPUTS TO THE B TERMINAL
2. JUMPER ALL UNUSED DIGITAL "-" INPUTS TO THE N TERMINAL.
3. DO NOT JUMPER INPUTS WITH DIFFERENT VOLTAGE REFERENCES TOGETHER.
4. WHEN L.E.D. #15 IS LIT THE SER IS IN TEST MODE.

⊗ = TWISTED WIRES.

NEW SHEET

GARDNER, ILLINOIS
MAIN STREET
M.P. 64.75
JOLIET SUBDIVISION
D.O.T.#290 522V
PROJ.#

5-1-01 UPGRADE CROSSING PROTECTION FOR THE HIGH SPEED RAIL PROJ. FROM MAZONIA TO SPRINGFIELD. AFE 004438P JJF WITT/JNM	MODIFICATION LEVEL		UNION PACIFIC	DES: WITT.IND.	UNION PACIFIC RAILROAD JOLIET, ILLINOIS TO BLOOMINGTON, ILLINOIS C.T.C. CIRCUITS	DATE 5-1-01	
	Q.A. LAST LEVEL CHK'D.	DA		DIG: WITT.IND.		SHEET 3	
	LAST LEVEL MOD. THIS TYP.	CZ		CHK: J.J.F.		DWG 64.75	
	LAST LEVEL BY DESIGNER.	DD		AFE: 004438P		RTE-CSL	
	CHANGED FROM TYP.? Y/N	Y	SIGNAL DESIGN	ID= CSL8475.3X	OFFICE OF CHIEF ENG'R	OMAHA NEBR.	

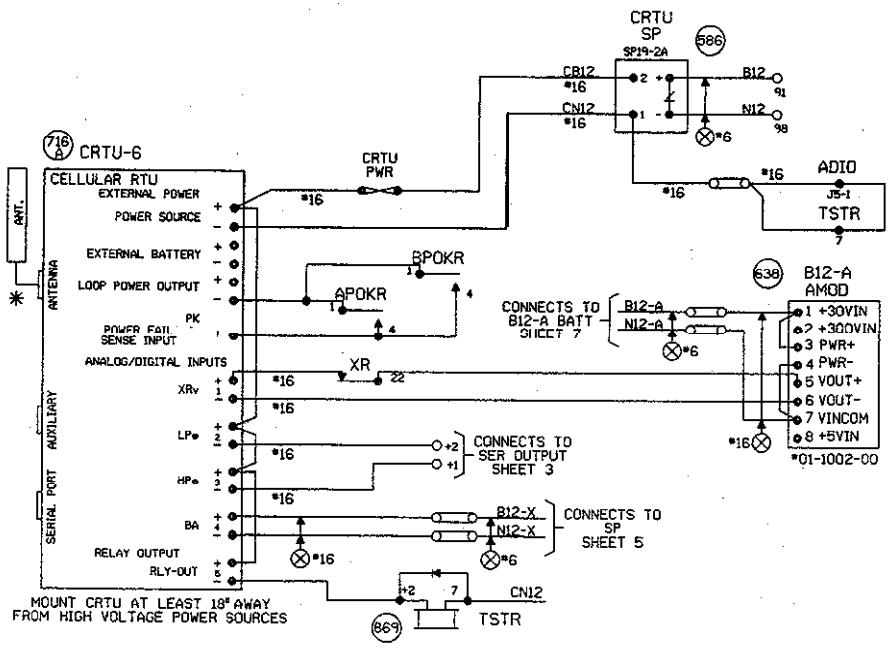

NOTES:

ALL DIODES 1N5060 OR 1N4004 UNLESS OTHERWISE NOTED.
✱MOUNT ANTENNA ON TOP OF HOUSE.
ALL WIRES #18 UNLESS OTHERWISE NOTED.
ALL UNUSED 'NC' INPUTS MUST BE TIED HIGH TO BATTERY
ALL UNUSED ANALOG INPUTS MUST BE TIED HIGH TO BATTERY
ALL UNUSED 'NO' INPUTS MUST BE DISCONNECTED
CRTU FRONT PANEL DISPLAYCHART INDICATES NORMAL STATE

■ DIGITAL INPUT HIGH, OR POWER FAIL INPUT CLOSED
□ DIGITAL INPUT LOW, OR POWER FAIL INPUT OPEN

NORMAL STATE FOR ANALOG CHANNELS IS EQUAL TO THE STORED NOMINAL VOLTAGE +120% OR -81%

■ L ← LATCH IS SET BECAUSE CRTU DETECTED AN ALARM CONDITION
12.06V L ←

'sRUN MODE' 'sRUN MODE-SILENT'
CRTU RADIO IS DISABLED. REPROGRAM CRTU WITH LAPTOP.

MEASURE NOMINAL VOLTAGE ON ANALOG INPUT MODULE BETWEEN 1 +30VIN AND 7 VINCOM

ANALOG AND AC INPUT MODULES MUST BE MOUNTED LESS THAN 12" FROM THE CRTU

ANALOG MODULES CONVERT DC VOLTAGE TO A SQUARE WAVE. A WORKING ANALOG MODULE WILL HAVE 4.5VDC TO 8.0VDC BETWEEN 5VOUT+ AND 6VOUT-. WHERE, 0VOLTS = 0HZ OUT, 3OVOLTS = 10KHZ OUT, AND 15VOLTS = 5KHZ OUT MAKE SURE CRTU IS PROGRAMMED WITH CALIBRATION SETTINGS

UNIT INSTALLATION AND SETUP

R.R. SITE ID WHERE; SSSS = 4 CHARACTER SUBDIVISION ID. FILL WITH PRECEDING ZEROS AS REQUIRED. THE MAIN TRACK SUBDIVISION ID* IS IN THE CURRENT TIMETABLE. INDUSTRIAL LEADS, LEASED, AND LEAD TRACKS LISTED WITHIN THE SUBDIVISION MAY HAVE THEIR OWN UNIQUE SUBDIVISION ID*. DO NOT AUTOMATICALLY USE THE MAIN TRACK SUBDIVISION ID* FOR THESE OTHER TRACKS. ALWAYS DOUBLE CHECK WITH THE MOST CURRENT PRINTED COPY OF THE TIMETABLE.
LLLLLLLL = 8 CHARACTERS USE DOT* AT CROSSINGS, AND USE MP* AT WAYSIDE AND HBD SITES. FILL WITH PRECEDING DASHES AS REQUIRED.
THE MP* MUST USE A DECIMAL POINT TO SEPARATE NUMBERS.
AA = 2 CHARACTER STATE NAME FOR CROSSINGS.
AA = 'WD' FOR WAYSIDE LOCATIONS, AA = 'HB' FOR HBD SITES.
MUST BE 14 CHARACTERS LONG, NO SPACES ALLOWED.

SITE IDENTIFIER: SSSSLLLLLLLLAA	0025-290522VIL
SIGNAL STRENGTH dBm	
CARRIER ID	
FIRMWARE VERSION	2.3.06
SERIAL NUMBER	
CONFIGURATION NET	MICROBURST
SIGNAL STATUS	
SCADANET STATUS	
SILENCE INTERVAL	60 MINUTES
HEALTHCHECK INTERVAL	EVERY 2 DAYS
ALARM DEFER DELAY	240 MINUTES (4 HOURS)
OPERATION TO RESUME:	RUN
CALIBRATION CONSTANT	
CH1	
CH4	
POWER SOURCE	

FIELD PROVIDES: SAMPLED NOMINAL VOLTAGES, SCADANET STATUS CALIBRATION CONSTANTS, SERIAL NUMBER, AND SIGNAL STATUS.

CHANNEL SETUP - STANDARD CONFIGURATION 3:XRv,LPe,HPe,BA

CHANNEL NORMAL STATE	SENSE (NO/NC)	NAME FUNCTION	RECOGNITION DELAY SECONDS ACTIVE	NORMAL	RETURN TO NORMAL	REPORTING MODE	ALARM LINKED CHANNEL	ALARM LINKED CRITERIA	EVENT LOGGING ENABLED OPTIONS
POWER FAIL (CH5) ■	POWER FAIL DETECT NO	PFin-PK AC POWER FAIL	7,200 ALARM	300 NORMAL	ENABLED	ALERT	DISABLED	N/A	
CH1 STORED NOMINAL VOLTAGE	ANALOG INPUT N/A	CH1-XR/V XR DOWN TO LONG BATTERY LOW	1800 ALARM	300 NORMAL	ENABLED	ALERT W/UPDATE	DISABLED	N/A	ANALOG VALUE SENT
CH2 ■	DIGITAL INPUT NO	CH2-LPe LIGHT OUT GATE NOT UP/DOWN	120 ALARM	10 NORMAL	ENABLED	ALERT	DISABLED	N/A	
CH3 ■	DIGITAL INPUT NO	CH3-HPe VEHICLE DETECTOR HEALTH FAILURE	120 ALARM	10 NORMAL	ENABLED	ALERT	DISABLED	N/A	
CH4 STORED NOMINAL VOLTAGE	ANALOG INPUT N/A	CH4-BA/V BATTERY MONITOR BATTERY LOW	300 ALARM	300 NORMAL	DISABLED	ALERT W/UPDATE	DISABLED	N/A	DIGITAL EVENTS
POWER SOURCE (CH5)	ANALOG INPUT N/A	PS-BA/V BATTERY MONITOR BATTERY LOW	300 ALARM	300 NORMAL	DISABLED	ALERT W/UPDATE	DISABLED	N/A	PFin-PK CH2-LPe CH3-HPe

ANALOG CHANNEL	USEFUL RANGE VOLTS LOW	HIGH	DISPLAYED RANGE VOLTS LOW	HIGH	RELATIVE ALARM POINT LOW	HIGH	ABSOLUTE ALARM POINT LOW	HIGH	AUTOMATIC UPDATE INTERVAL	STORED NOMINAL VOLTAGE	SAMPLED NOMINAL VOLTAGE
CH1	0.0	30.00	0.0	30.00	81%	120%	10.0	28.0	10 DAYS	12.69	
CH2											
CH3											
CH4	0.0	30.00	0.0	30.00	81%	120%	10.0	28.0	10 DAYS	12.69	
POWER SOURCE	0.0	30.00	0.0	30.00	81%	120%	10.0	28.0	10 DAYS	12.69	

RELAY OUTPUT	NAME	ACTIVE	NORMAL	PULSE DURATION	15 SECONDS	CHARTS REV'D 3-2-01
	RLY-OUT	SET-UP-OPEN	CLR-DN-CLOSE			

MAINTENANCE OPERATIONS

TO START OR ABORT ANY PROCEDURE
1. PRESS THE 'CANCEL' BUTTON FIRST

WHEN RESPONDING TO A CALL, PUT THE CRTU IN THE 'SILENCE ALARMS' MODE

1. PRESS 'SELECT' AND THEN '+ ARROW' BUTTON UNTIL
   DISPLAY: ACTION?
   SILENCE ALARMS
2. PRESS THE 'SELECT' BUTTON TWICE
3. CORRECT PROBLEM AND SIMULATE NORMAL TRAIN MOVEMENT THROUGH THE LOCATION
4. EXAMINE EACH CHANNEL ON THE CRTU
5. PRESS THE '+/- ARROW' BUTTON. VERIFY ALL CHANNELS INDICATE A NORMAL STATE NORMAL STATES ARE ON THE CHANNEL SETUP CHART

CLEAR TIMERS, LATCHES AND SEND ALL NORMAL

1. DO STEPS #1 - #5 ABOVE, AND PRESS 'CANCEL'.
2. PRESS 'SELECT' AND THEN '- ARROW' BUTTON UNTIL
   DISPLAY: ACTION?
   SERVICE MODE
3. PRESS 'SELECT' AGAIN TO RESET TIMERS, AND IF
   DISPLAY: SERVICE MODE
   ALL NORMAL
4. PRESS 'SELECT' AGAIN TO CLEAR LATCHES, AND SEND ALL NORMAL. SKIP STEPS #5-#6.
5. HOWEVER, IF ALARMS ARE NOT CLEARED;
   DISPLAY: SERVICE MODE
   ALARMS PENDING/PRESENT
6. PRESS 'CANCEL', CORRECT PROBLEM AND REPEAT STEPS #2 THRU #5 UNTIL ALL NORMAL SENT.

TO CANCEL THE 'SILENCE ALARMS' MODE

1. PRESS 'SELECT' AND THEN '+ ARROW' BUTTON UNTIL
   DISPLAY: ACTION?
   CANCEL SILENCE
2. PRESS THE 'SELECT' BUTTON AGAIN

EXAMINE & SET BATTERY VOLTAGE NOMINAL VALUE

1. PRESS THE '+ ARROW' OR '- ARROW' BUTTON UNTIL THE DESIRED CHANNEL IS DISPLAYED.
   DISPLAY: PS-BA:
   13.83V NORMAL
2. VERIFY THE DISPLAYED READING WITH A DIGITAL VOLTMETER
3. PRESS THE 'SELECT' BUTTON, AND THE CRTU DISPLAY WILL SWITCH BETWEEN CURRENT/SAVED NOMINAL VOLTAGE VALUES.
   DISPLAY: NOMINAL ON #67 (CURRENT)
   13.83
   DISPLAY: SAVED NOMINAL 6 (STORED)
   12.69
4. PRESS THE 'SELECT' BUTTON AND THE CURRENT OR 'NOMINAL ON' VALUE WILL BE SAMPLED AND STORED AS THE 'SAVED NOMINAL' VALUE
5. VERIFY THE 'NOMINAL ON' AND 'SAVED NOMINAL' VALUES ARE EQUIVALENT, REPEAT STEPS #1 THRU #3 & PRESS THE 'CANCEL' BUTTON.

NEW SHEET

GARDNER, ILLINOIS
MAIN STREET
M.P. 64.75
JOLIET SUBDIVISION
D.O.T.#290 522V
PROJ.#

5-1-01
UPGRADE CROSSING PROTECTION FOR THE HIGH SPEED RAIL PROJ. FROM MAZONIA TO SPRINGFIELD.
AFE 004438P JJF
WITT/JNM

MODIFICATION LEVEL	
Q.A. LAST LEVEL CHK'D.	DA
LAST LEVEL MOD. THIS TYP.	CZ
LAST LEVEL BY DESIGNER.	DO
CHANGED FROM TYP.? Y/N	Y

UNION PACIFIC
QUALITY SAFETY SIGNAL DESIGN

DES:	WITT.IND.
DIG:	WITT.IND.
CHK:	J.J.F.
A.F.E.	004438P
ID=	CSL6475.4X

UNION PACIFIC RAILROAD
JOLIET, ILLINOIS TO BLOOMINGTON, ILLINOIS
C.T.C. CIRCUITS
OFFICE OF CHIEF ENG'R OMAHA NEBR.

DATE	5-1-01
SHEET	4
DWG	64.75
	RTE-CSL

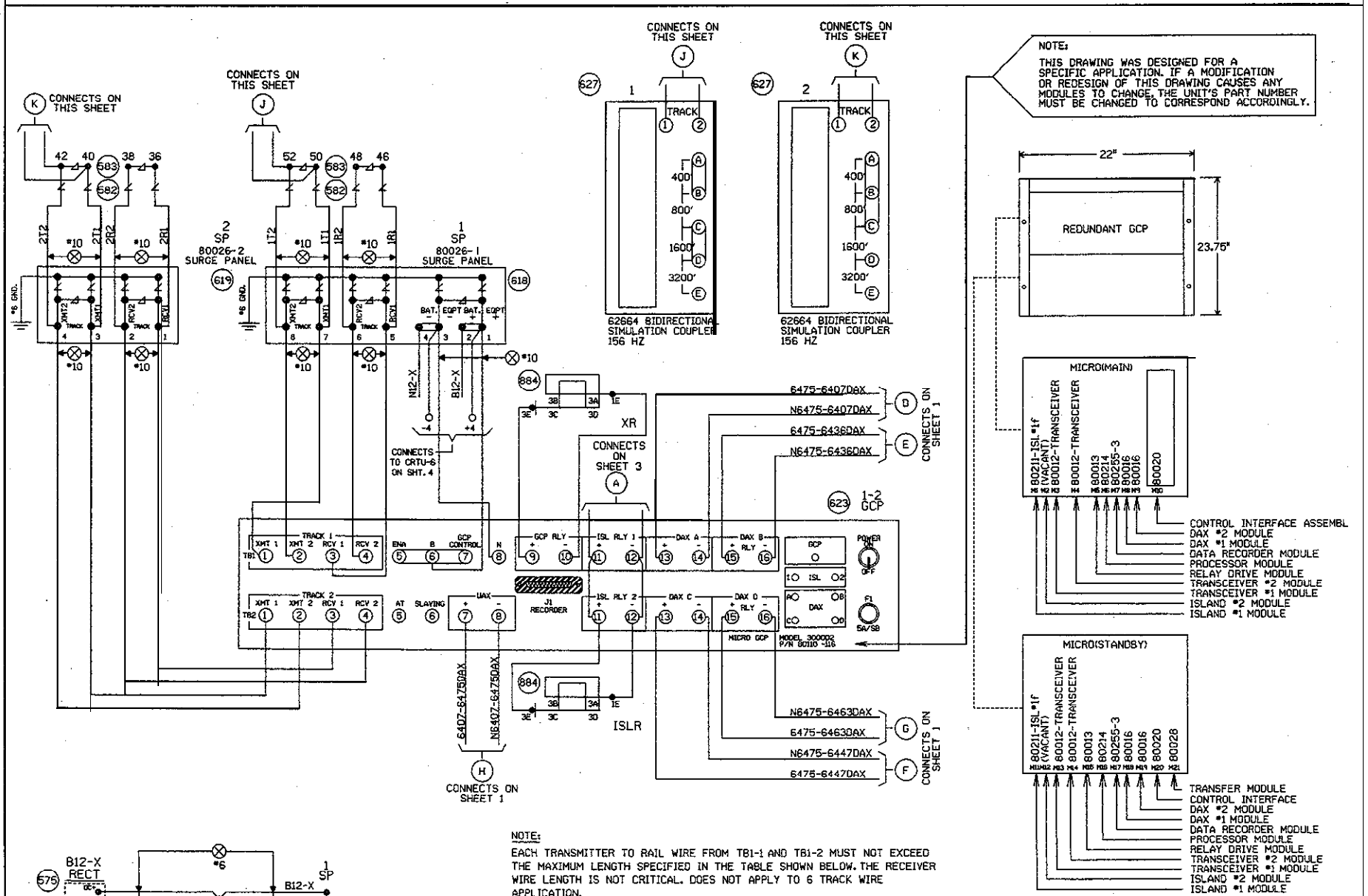

NOTE:
EACH TRANSMITTER TO RAIL WIRE FROM TB1-1 AND TB1-2 MUST NOT EXCEED THE MAXIMUM LENGTH SPECIFIED IN THE TABLE SHOWN BELOW. THE RECEIVER WIRE LENGTH IS NOT CRITICAL. DOES NOT APPLY TO 6 TRACK WIRE APPLICATION.

"Mf" FREQUENCY (HZ)	MAXIMUM TRANSMIT WIRE LENGTH (FEET)
86	100
114	125
156	150
211	200
285-970	250

NEW SHEET

GARDNER, ILLINOIS
MAIN STREET
M.P. 64.75
JOLIET SUBDIVISION
D.O.T.#290 522V
PROJ.#

5-1-01 UPGRADE CROSSING PROTECTION FOR THE HIGH SPEED RAIL PROJ. FROM MAZONIA TO SPRINGFIELD. APE 00443BP JJF WITT/JNM	MODIFICATION LEVEL		UNION PACIFIC SIGNAL DESIGN	DES: WITT.IND.	UNION PACIFIC RAILROAD JOLIET, ILLINOIS TO BLOOMINGTON, ILLINOIS C.T.C. CIRCUITS	DATE 5-1-01	
	Q.A. LAST LEVEL CHK'D.	DA		DIG: WITT.IND.		SHEET 5	
	LAST LEVEL MOD. THIS TYP.	CZ		CHK: J.J.F.		DWG 64.75	
	LAST LEVEL BY DESIGNER.	DD		A.F.E. 00443BP		RTE-CSL	
	CHANGED FROM TYP.? Y/N	Y		ID= CSL6475.5X	OFFICE OF CHIEF ENG'R OMAHA NEBR.		

(REV. 7-9-00) (3K2TKLIG.4)

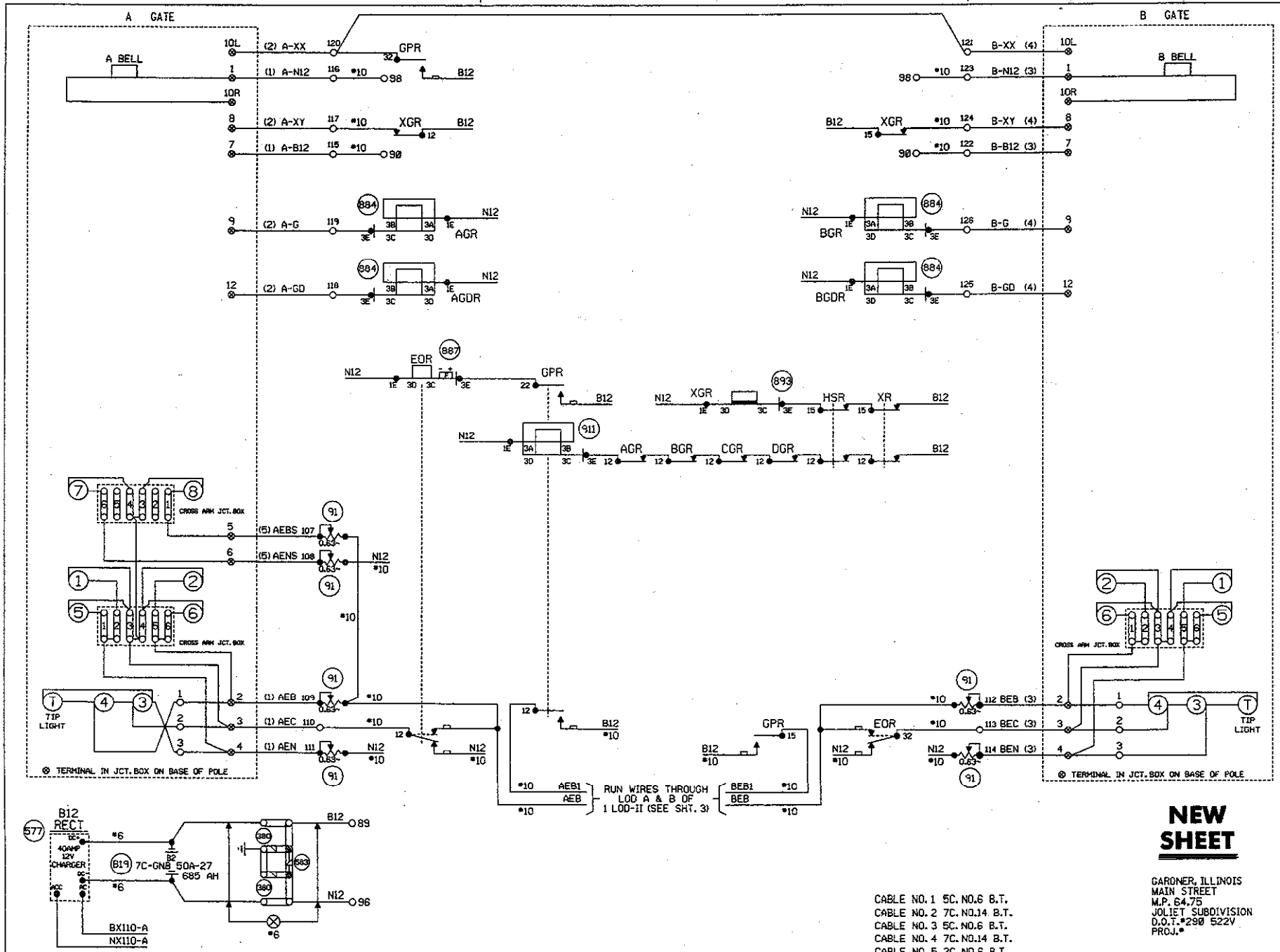

(REV 7-9-00) (4GTYP.5)

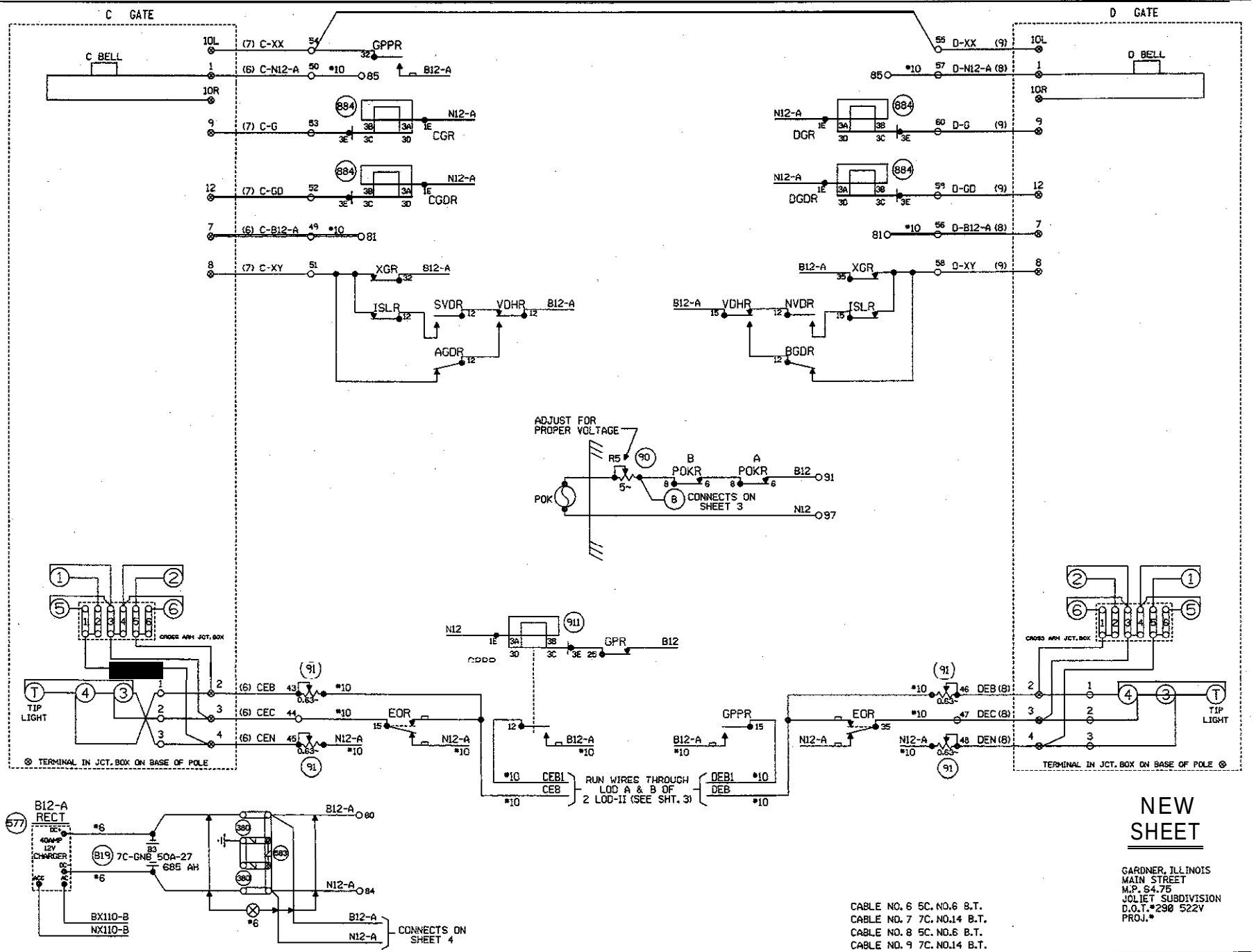

5-1-01 UPGRADE CROSSING PROTECTION FOR THE HIGH SPEED RAIL PROJ. FROM MAZONIA TO SPRINGFIELD. AFE 00443BP JJF WITT/JNM	
MODIFICATION LEVEL	
Q.A. LAST LEVEL CHK'D.	DA
LAST LEVEL MOD. THIS TYP.	CZ
LAST LEVEL BY DESIGNER.	DD
CHANGED FROM TYP.? Y/N	Y

UNION PACIFIC — SAFETY QUALITY PRODUCTIVITY — SIGNAL DESIGN

DES: WITT,IND.
DIG: WITT,IND.
CHK: J.J.F.
A.F.E. 00443BP
ID: CSL6475.7X

UNION PACIFIC RAILROAD
JOLIET, ILLINOIS TO BLOOMINGTON, ILLINOIS
C.T.C. CIRCUITS
OFFICE OF CHIEF ENG'R OMAHA NEBR.

DATE 5-1-01
SHEET 7
DWG 64.75
RTE-CSL

(REV. 7-9-00) (4GTYP.6)

WCH 3597 EXIT GATE

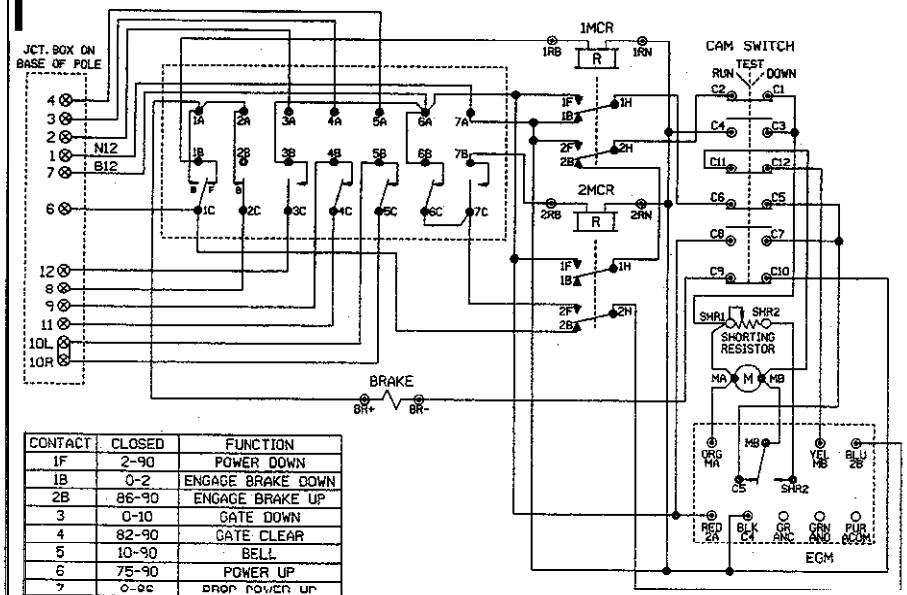

CONTACT	CLOSED	FUNCTION
1F	2-90	POWER DOWN
1B	0-2	ENGAGE BRAKE DOWN
2B	86-90	ENGAGE BRAKE UP
3	0-10	GATE DOWN
4	82-90	GATE CLEAR
5	10-90	BELL
6	75-90	POWER UP
7	0-86	PROP POWER UP

MECHANISM SHOWN IN CLEAR POSITION

FOR WIRING GATES "C" AND "D"

US&S MODEL 95 EXIT GATE

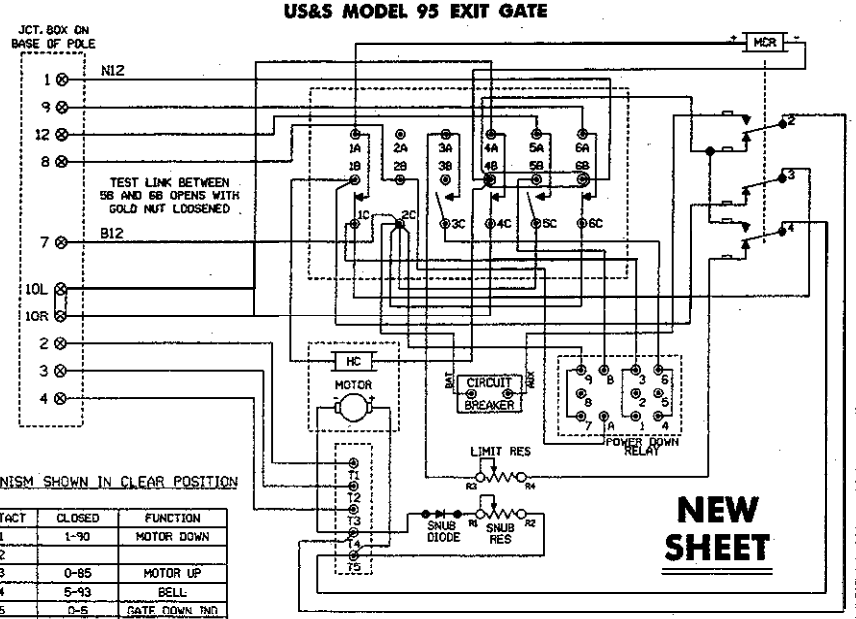

MECHANISM SHOWN IN CLEAR POSITION

CONTACT	CLOSED	FUNCTION
1	1-90	MOTOR DOWN
2		
3	0-85	MOTOR UP
4	5-93	BELL
5	0-5	GATE DOWN IND
6	83-90	FLASHING LIGHT

FOR WIRING GATES "C" AND "D"

WCH 3597 ENTRANCE GATE

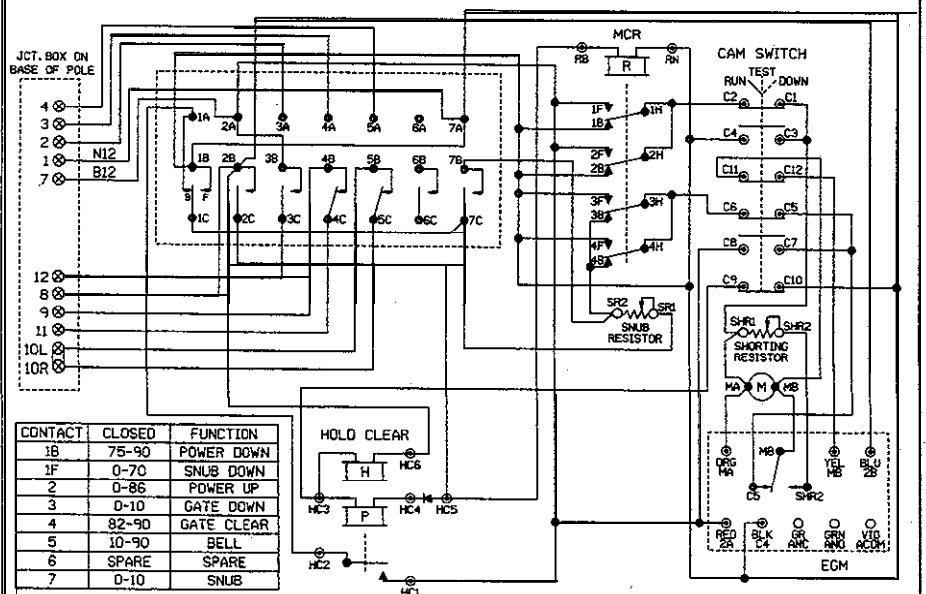

CONTACT	CLOSED	FUNCTION
1B	75-90	POWER DOWN
1F	0-70	SNUB DOWN
2	0-86	POWER UP
3	0-10	GATE DOWN
4	82-90	GATE CLEAR
5	10-90	BELL
6	SPARE	SPARE
7	0-10	SNUB

MECHANISM SHOWN IN CLEAR POSITION

FOR WIRING GATES "A" AND "B"

US&S MODEL 95 ENTRANCE GATE

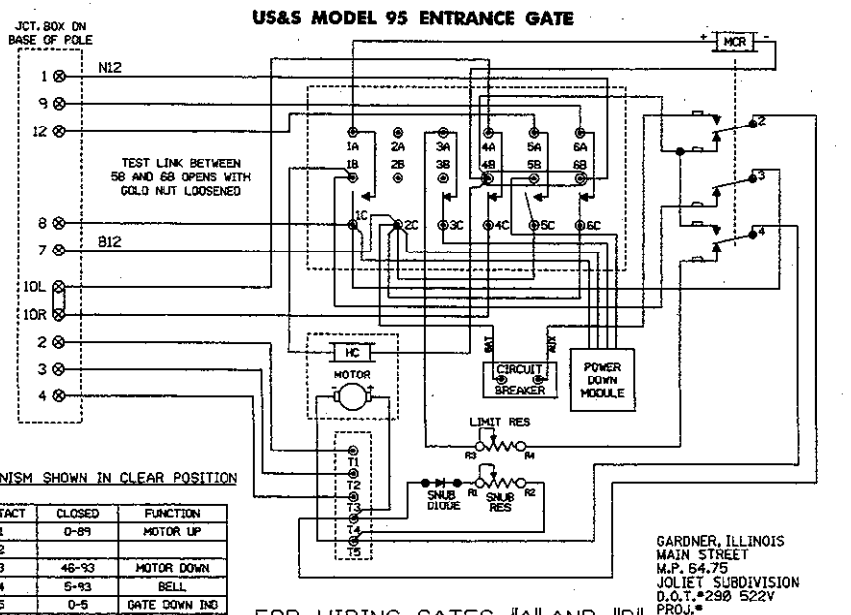

MECHANISM SHOWN IN CLEAR POSITION

CONTACT	CLOSED	FUNCTION
1	0-89	MOTOR UP
2		
3	46-93	MOTOR DOWN
4	5-93	BELL
5	0-5	GATE DOWN IND
6	83-90	FLASHING LIGHT

FOR WIRING GATES "A" AND "B"

GARDNER, ILLINOIS
MAIN STREET
M.P. 64.75
JOLIET SUBDIVISION
D.O.T.#290 522V
PROJ.#

5-1-01 UPGRADE CROSSING PROTECTION FOR THE HIGH SPEED RAIL PROJ. FROM MAZONIA TO SPRINGFIELD. AFE 004438P JJF WITT/JNM	MODIFICATION LEVEL		UNION PACIFIC SIGNAL DESIGN	DES: WITT.JNO.	UNION PACIFIC RAILROAD JOLIET, ILLINOIS TO BLOOMINGTON, ILLINOIS C.T.C. CIRCUITS	DATE 5-1-01
	Q.A. LAST LEVEL CHK'D.	DA		DIG: WITT.JNO.		SHEET 8
	LAST LEVEL MOD. THIS TYP.	CZ		CHK: J.J.F.		DWG 64.75
	LAST LEVEL BY DESIGNER.	DD		A.F.E. 004438P		RTE-CSL
	CHANGED FROM TYP.7 Y/N	Y		ID= CSL6475.8X	OFFICE OF CHIEF ENG'R OMAHA NEBR.	

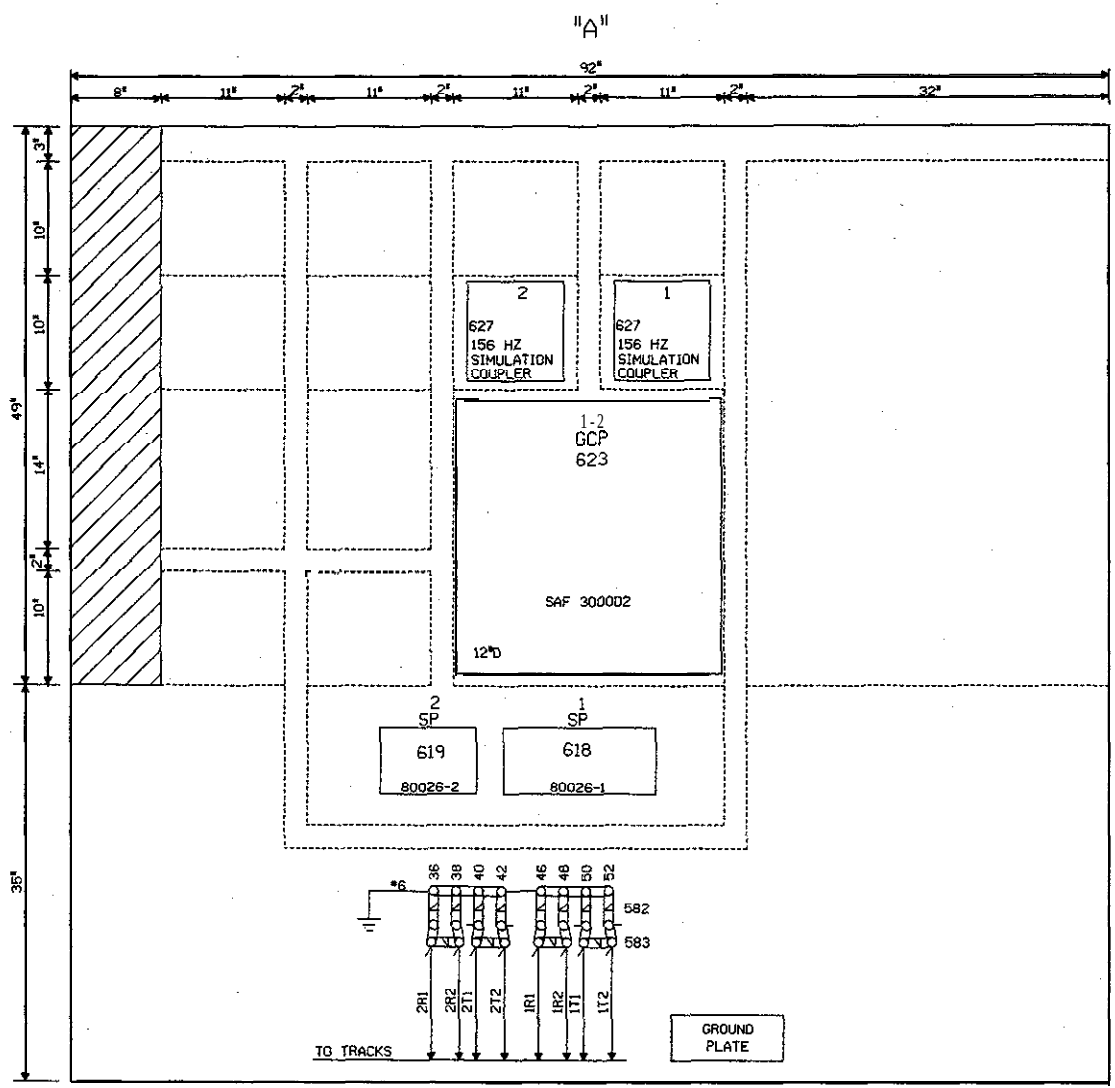

TWO CABLE ENTRANCES ON THIS WALL

NEW SHEET

0 1 2 3 4 FEET

SCALE: 1.5 INCHES = 1 FOOT

GARDNER, ILLINOIS
MAIN STREET
M.P.64.75
JOLIET SUBDIVISION
D.O.T.#290 522V
PROJ.#

5-1-01 UPGRADE CROSSING PROTECTION FOR THE HIGH SPEED RAIL PROJ. FROM MAZONIA TO SPRINGFIELD. APE 004438P JJF WITT/JNM	MODIFICATION LEVEL		UNION PACIFIC	DES: WITT.IND.	UNION PACIFIC RAILROAD JOLIET, ILLINOIS TO BLOOMINGTON, ILLINOIS C.T.C. CIRCUITS	DATE 5-1-01
	Q.A. LAST LEVEL CHK'D.	QA	SIGNAL DESIGN	DIG: WITT.IND.		SHEET 9
	LAST LEVEL MOD. THIS TYP.	CZ		CHK: J.J.F.		DWG 64.75
	LAST LEVEL BY DESIGNER.	DD		A.F.E. 004438P		RTE-CSL
	CHANGED FROM TYP.? Y/N	Y		ID= CSL6475.9X	OFFICE OF CHIEF ENG'R OMAHA NEBR.	

(REV. 7-9-00) (HOUSE.TYP)

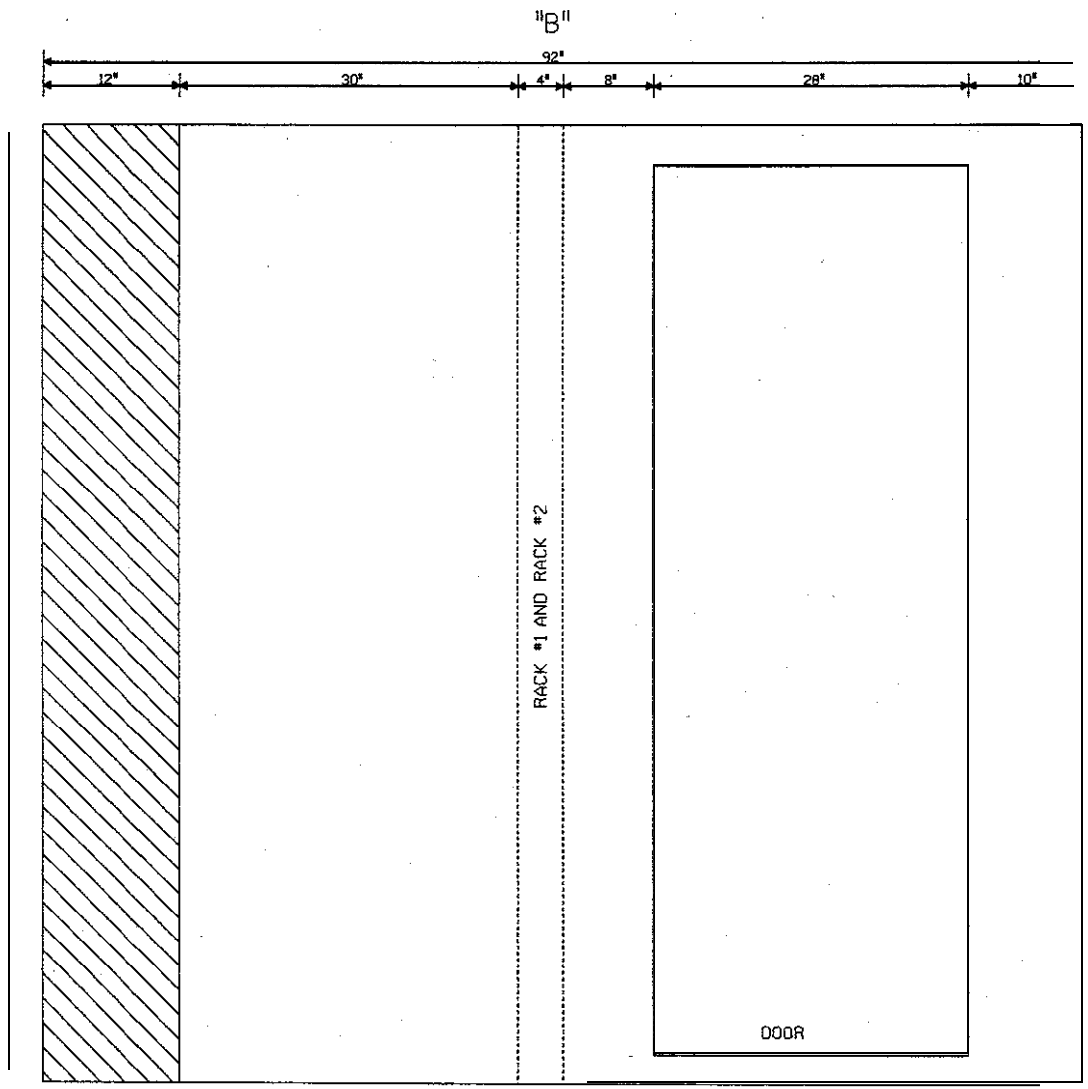

PLAN VIEW
8'x8' HOUSE
—NO SCALE—

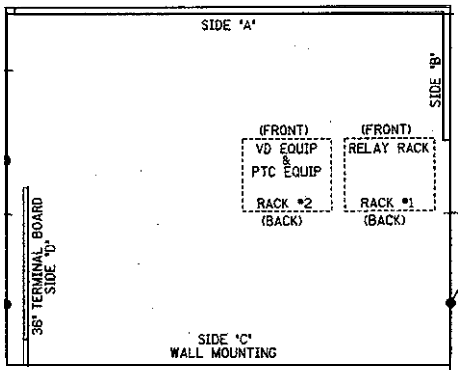

NEW
SHEET

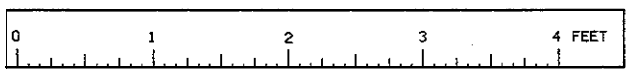

SCALE: 1.5 INCHES = 1 FOOT

GARDNER, ILLINOIS
MAIN STREET
M.P.64.75
JOLIET SUBDIVISION
D.O.T.#290 522V
PROJ.#

					5-1-01 UPGRADE CROSSING PROTECTION FOR THE HIGH SPEED RAIL PROJ. FROM MAZONIA TO SPRINGFIELD. AFE 004438P JJF WITT/JNM	MODIFICATION LEVEL		UNION PACIFIC SIGNAL DESIGN	DES: WITT.JND.	UNION PACIFIC RAILROAD JOLIET, ILLINOIS TO BLOOMINGTON, ILLINOIS C.T.C. CIRCUITS	DATE 5-1-01
						Q.A. LAST LEVEL CHK'D.	DA		DIG: WITT.JND.		SHEET 10
						LAST LEVEL MOD. THIS TYP.	CZ		CHK: J.J.F.		DWG 64.75
						LAST LEVEL BY DESIGNER.	DD		A.F.E. 004438P		RTE-CSL
						CHANGED FROM TYP.? Y/N	Y		ID= CSL6475.10X	OFFICE OF CHIEF ENG'R OMAHA NEBR.	

(REV. 7-9-00) (HOUSE.TYP)

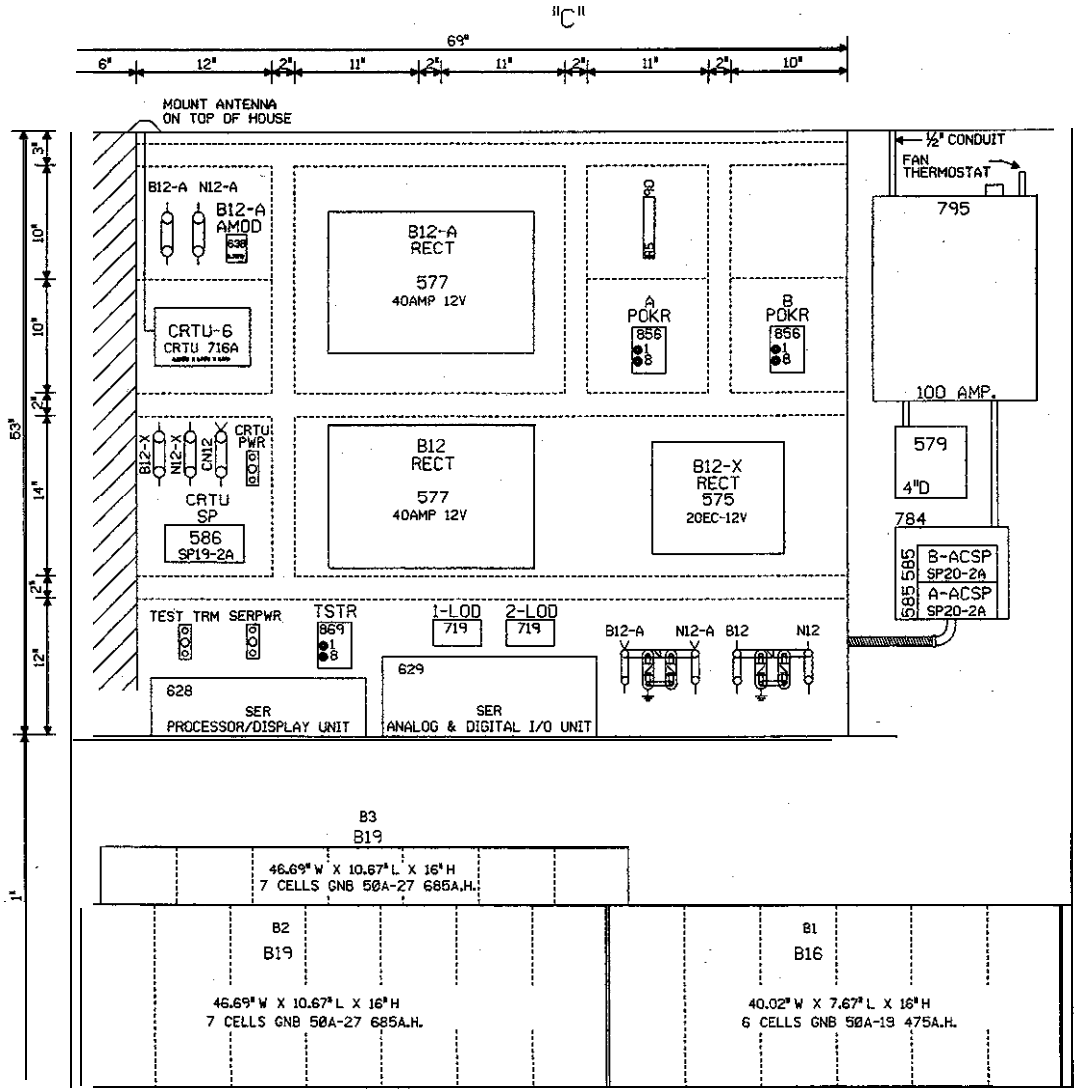

NEW SHEET

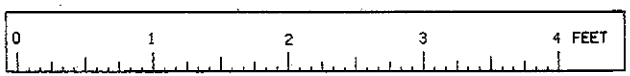

SCALE: 1.5 INCHES = 1 FOOT

GARDNER, ILLINOIS
MAIN STREET
M.P.64.75
JOLIET SUBDIVISION
D.O.T.#290 522V
PROJ.#

5-1-01	UPGRADE CROSSING PROTECTION FOR THE HIGH SPEED RAIL PROJ. FROM MAZONIA TO SPRINGFIELD. AFE 004438P JJF WITT/JNM	MODIFICATION LEVEL	
		Q.A. LAST LEVEL CHK'D.	DA
		LAST LEVEL MOD. THIS TYP.	CZ
		LAST LEVEL BY DESIGNER.	DD
		CHANGED FROM TYP.? Y/N	Y

UNION PACIFIC
SAFETY PROGRESS
SIGNAL DESIGN

DES: WITT.JNO.
DIG: WITT.JNO.
CHK: J.J.F.
A.F.E. 004438P
ID: CSL6475.11X

UNION PACIFIC RAILROAD
JOLIET, ILLINOIS TO
BLOOMINGTON, ILLINOIS
C.T.C. CIRCUITS
OFFICE OF CHIEF ENG'R OMAHA NEBR.

DATE 5-1-01
SHEET 11
DWG 64.75
RTE-CSL

(REV. 7-9-00) (HOUSE.TYP)

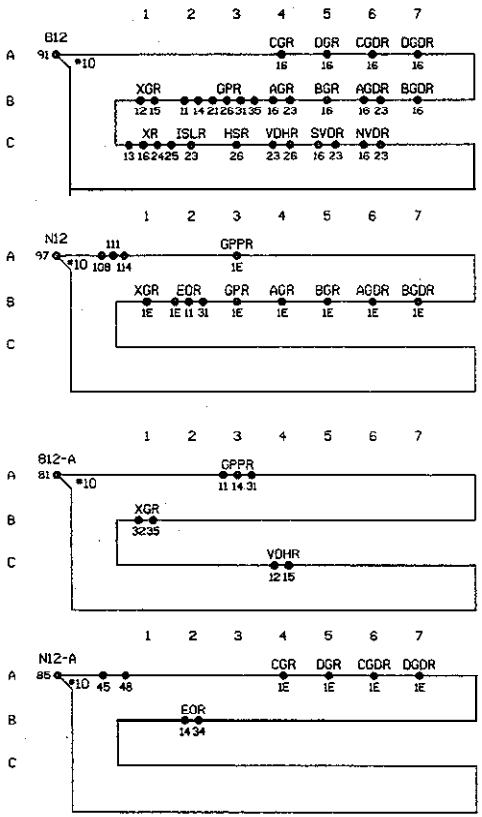

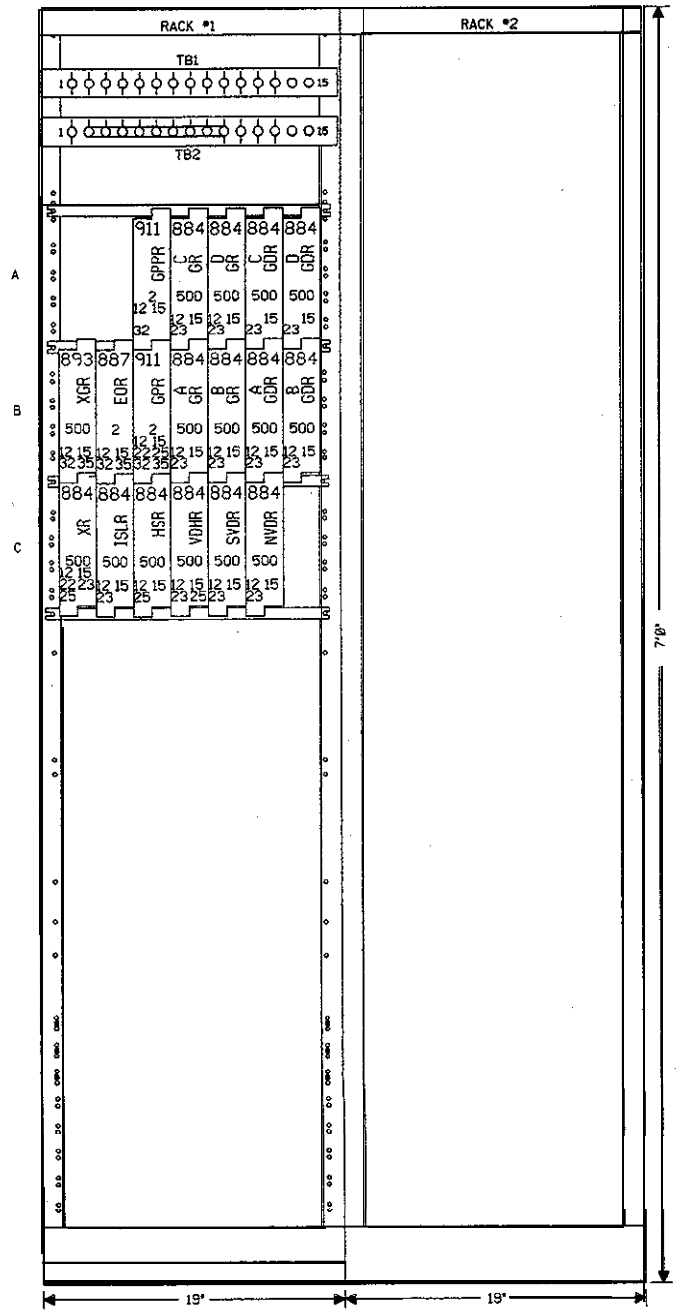

NEW
SHEET

GARDNER, ILLINOIS
MAIN STREET
M.P.64.75
JOLIET SUBDIVISION
D.O.T.#290 522V
PROJ.#

					5-1-01 UPGRADE CROSSING PROTECTION FOR THE HIGH SPEED RAIL PROJ. FROM MAZONIA TO SPRINGFIELD. AFE 004438P JJF WITT/JNM	MODIFICATION LEVEL		UNION PACIFIC	DES: WITT.IND.	UNION PACIFIC RAILROAD JOLIET, ILLINOIS TO BLOOMINGTON, ILLINOIS C.T.C. CIRCUITS	DATE 5-1-01
						Q.A. LAST LEVEL CHK'D.	DA	SIGNAL DESIGN	DIG: WITT.IND.		SHEET 12
						LAST LEVEL MOD. THIS TYP.	CZ		CHK: J.J.F.		DWG 64.75
						LAST LEVEL BY DESIGNER.	DD		A.F.E. 004438P		RTE-CSL
						CHANGED FROM TYP.? Y/N	Y		ID: CSL6475.12X	OFFICE OF CHIEF ENG'R OMAHA NEBR.	

(REV. 7-9-00) (HOUSE.TYP)

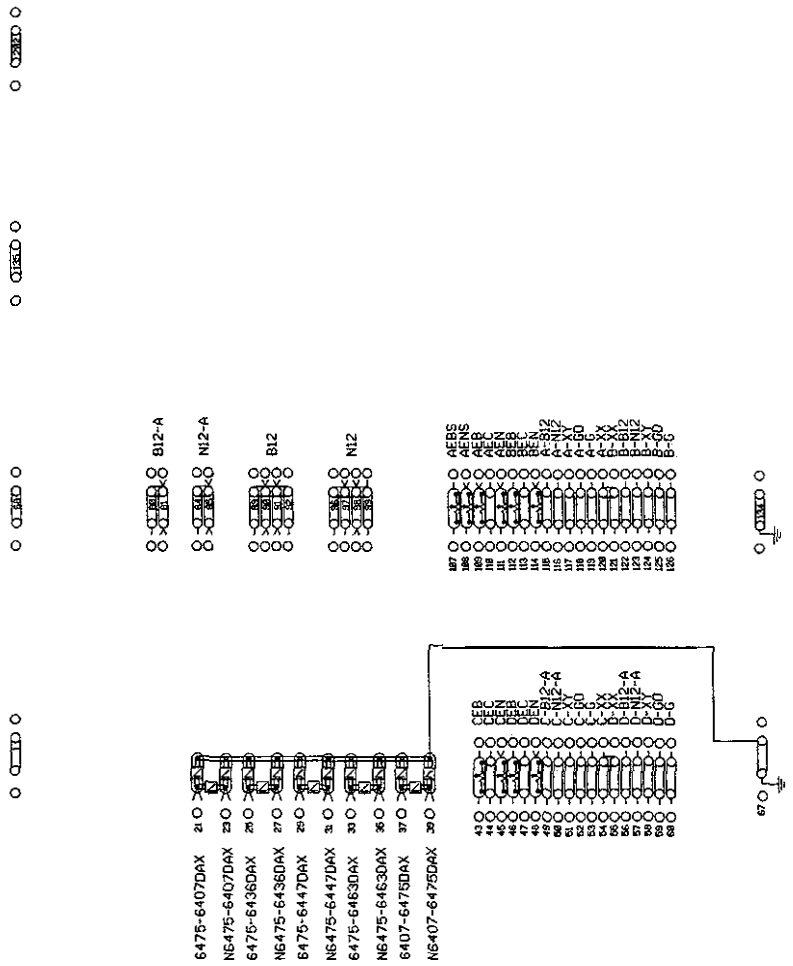

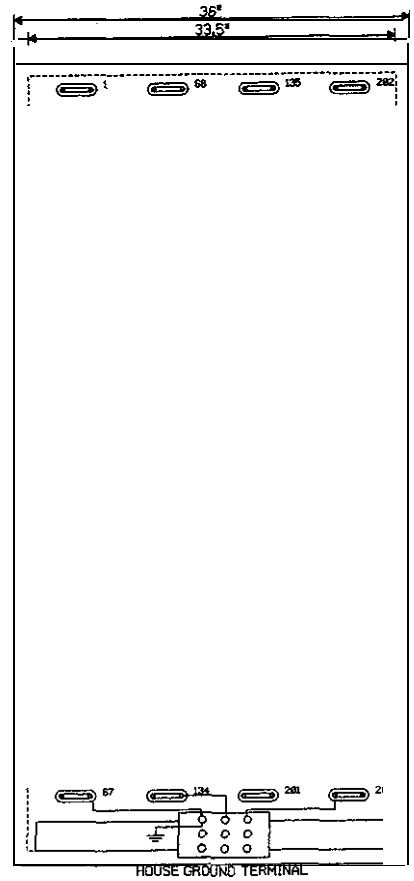

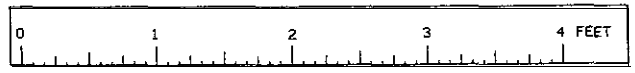

SCALE: 1.5 INCHES = 1 FOOT

NEW SHEET

GARDNER, ILLINOIS
MAIN STREET
M.P.64.75
JOLIET SUBDIVISION
D.O.T.#290 522V
PROJ.#

					5-1-01 UPGRADE CROSSING PROTECTION FOR THE HIGH SPEED RAIL PROJ. FROM MAZONIA TO SPRINGFIELD. AFE 004438P JJF WITT/JNM	MODIFICATION LEVEL		UNION PACIFIC QUALITY PRODUCTIVITY SAFETY SIGNAL DESIGN	DES: WITT.JND. DIG: WITT.JND. CHK: J.J.F. A.F.E. 004438P ID: CSL6475.13X	UNION PACIFIC RAILROAD JOLIET, ILLINOIS TO BLOOMINGTON, ILLINOIS C.T.C. CIRCUITS OFFICE OF CHIEF ENG'R OMAHA NEBR.	DATE 5-1-01 SHEET 13 DWG 64.75 RTE-CSL
						Q.A. LAST LEVEL CHK'D.	0A				
						LAST LEVEL MOD. THIS TYP.	CZ				
						LAST LEVEL BY DESIGNER.	DD				
						CHANGED FROM TYP.? Y/N	Y				

(REV. 7-9-00 LANGKSE TYP)