PDF COPY

lei-056.89-0.dgn
16-MAY-2012

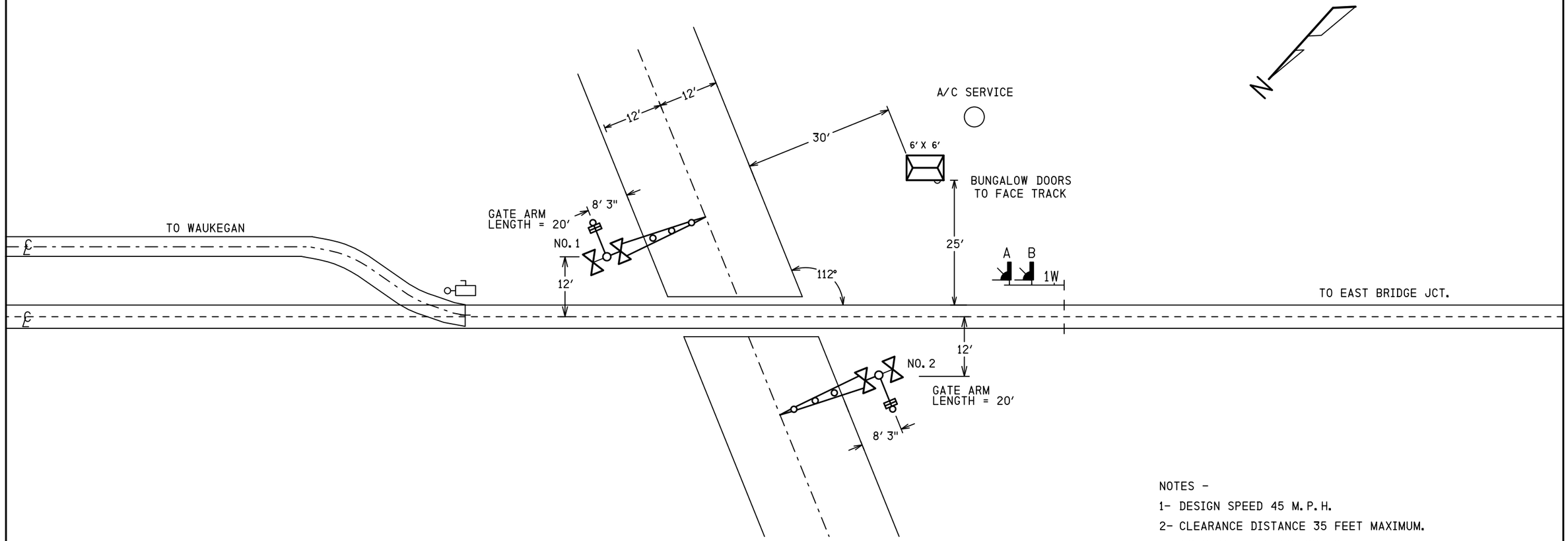

NOTES -

1- DESIGN SPEED 45 M.P.H.

2- CLEARANCE DISTANCE 35 FEET MAXIMUM.

3- CONSTANT WARNING CONTROL.

4- APPROACH CIRCUIT DISTANCE PROVIDES FOR:

TRAFFIC SIGNAL PRE-EMPTION	00 SEC. (00 SEC. ADVANCE)
MINIMUM WARNING TIME	20 SEC.
GATE DESCENT DELAY TIME	04 SEC.
BUFFER TIME	10 SEC.
EQUIPMENT REACTION TIME	05 SEC.

IRC 23 FEB 2012

PROPOSED
DESIGN NO. 12-0019
RED-IN YELLOW-OUT

AS INSTALLED
DATE _____
BY _____
(PRINT NAME)

PROPOSED D	M	Y	REVISIONS	D	C	COMPLETED D	M	Y	C

REGION SOUTHERN
SUB. LEITHTON 332

SIGNALS AND COMMUNICATIONS HOMEWOOD
23 FEBRUARY 2012

DES. PWW
CH. BJW

SITUATION SKETCH
SCALE 1" = 20'
LAKE ZURICH, IL
GILMER RD.

LEI-056.89-0

DOT# 260 500N

20

PDF COPY

REVISIONS				
NO.	DATE	BY	DESCRIPTION	APP. BY
1				
2				
3				
4				
5				

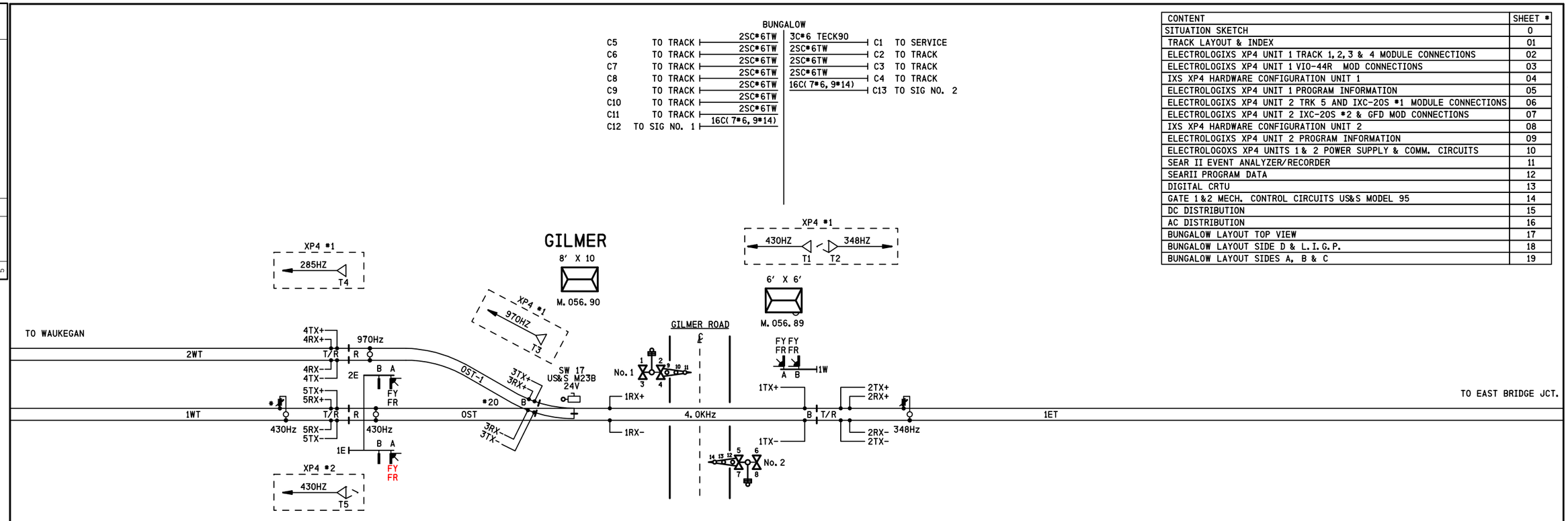

CONTENT	SHEET #
SITUATION SKETCH	0
TRACK LAYOUT & INDEX	01
ELECTROLOGIXS XP4 UNIT 1 TRACK 1,2,3 & 4 MODULE CONNECTIONS	02
ELECTROLOGIXS XP4 UNIT 1 VIO-44R MOD CONNECTIONS	03
IXS XP4 HARDWARE CONFIGURATION UNIT 1	04
ELECTROLOGIXS XP4 UNIT 1 PROGRAM INFORMATION	05
ELECTROLOGIXS XP4 UNIT 2 TRK 5 AND IXC-20S #1 MODULE CONNECTIONS	06
ELECTROLOGIXS XP4 UNIT 2 IXC-20S #2 & GFD MOD CONNECTIONS	07
IXS XP4 HARDWARE CONFIGURATION UNIT 2	08
ELECTROLOGIXS XP4 UNIT 2 PROGRAM INFORMATION	09
ELECTROLOGOXS XP4 UNITS 1 & 2 POWER SUPPLY & COMM. CIRCUITS	10
SEAR II EVENT ANALYZER/RECORDER	11
SEARII PROGRAM DATA	12
DIGITAL CRTU	13
GATE 1 &2 MECH. CONTROL CIRCUITS US&S MODEL 95	14
DC DISTRIBUTION	15
AC DISTRIBUTION	16
BUNGALOW LAYOUT TOP VIEW	17
BUNGALOW LAYOUT SIDE D & L.I.G.P.	18
BUNGALOW LAYOUT SIDES A, B & C	19

lei-056.89-01.dgn
16-MAY-2012

FLASHING LIGHT UNITS ALIGNMENT TABLE

PRIMARY FRONT LIGHTS FOR VEHICLES							
SIG #	LIGHT #	ROUNDEL		ROAD SPEED	MINIMUM DISTANCE	RECOMMENDED DISTANCE	ALIGNMENT DISTANCE
		SIZE	TYPE	MPH	FT	FT	FT
1	1,2			45	460	750	
2	7,8			45	460	750	
BACK LIGHTS FOR VEHICLES							
SIG #	LIGHT #	ROUNDEL		ROAD SPEED	MINIMUM DISTANCE	RECOMMENDED DISTANCE	ALIGNMENT DISTANCE
		SIZE	TYPE	MPH	FT	FT	FT
1	3,4			N/A	N/A	N/A	50
2	5,6			N/A	N/A	N/A	50

NOTE
FIELD IS TO PROVIDE THE ACTUAL ALIGNMENT DISTANCE AS DETERMINED BY
SCP-706: ROAD CROSSING DEVICE LIGHT UNIT ALIGNMENT PROCEDURES

NOTE: FIELD TO CONFIRM ROUNDEL SIZE AND TYPE

NOTES

1) DENOTES NARROW BAND SHUNT 62775-3497

2) DENOTES NARROW BAND SHUNT *62775-1543 WITH DUMMY TRACK LOAD *8V617-2400

3) * DENOTES NARROW BAND SHUNT *62775-1543 WITH DUMMY TRACK LOAD *8V617-1800

IRC 23 FEB 2012

PROPOSED
DESIGN NO. 12-0019
RED-IN YELLOW-OUT

AS INSTALLED
DATE _____
BY _____
(PRINT NAME)

PROPOSED D	M	Y	REVISIONS	D	C	COMPLETED D	M	Y	C
16	05	12	OUT OF SERVICE REVISED	NAD	BJW				

REGION SOUTHERN
SUB. LEITHTON 332

SIGNALS AND COMMUNICATIONS HOMEWOOD
23 FEBRUARY 2012
DES. PWW
CH. BJW

TRACK LAYOUT & INDEX

LAKE ZURICH, IL
GILMER RD.

LEI-056.89-01

DOT# 260 500N

INVENSYS RAIL CORPORATION

DES.: PWW	DATE: 23/02/12	JOB NO.: WCNA10164	
CKD.: BJW	ISSUE DATE: N/A	EST. NO.: JXXE03033	
DRN.: PWW	PLAN NO.: N/A	SHEET 1 OF 19	
P TIME: 12:49	P DATE: 16-MAY-2012	CAD ID.: LEI-056.89-01	

INVENSYS RAIL CORP.
LOUISVILLE DIVISION, LOUISVILLE, KY

PDF COPY

REVISIONS				
NO.	DATE	BY	DESCRIPTION	APP. BY
1				
2				
3				
4				
5				

XP4 UNIT 1

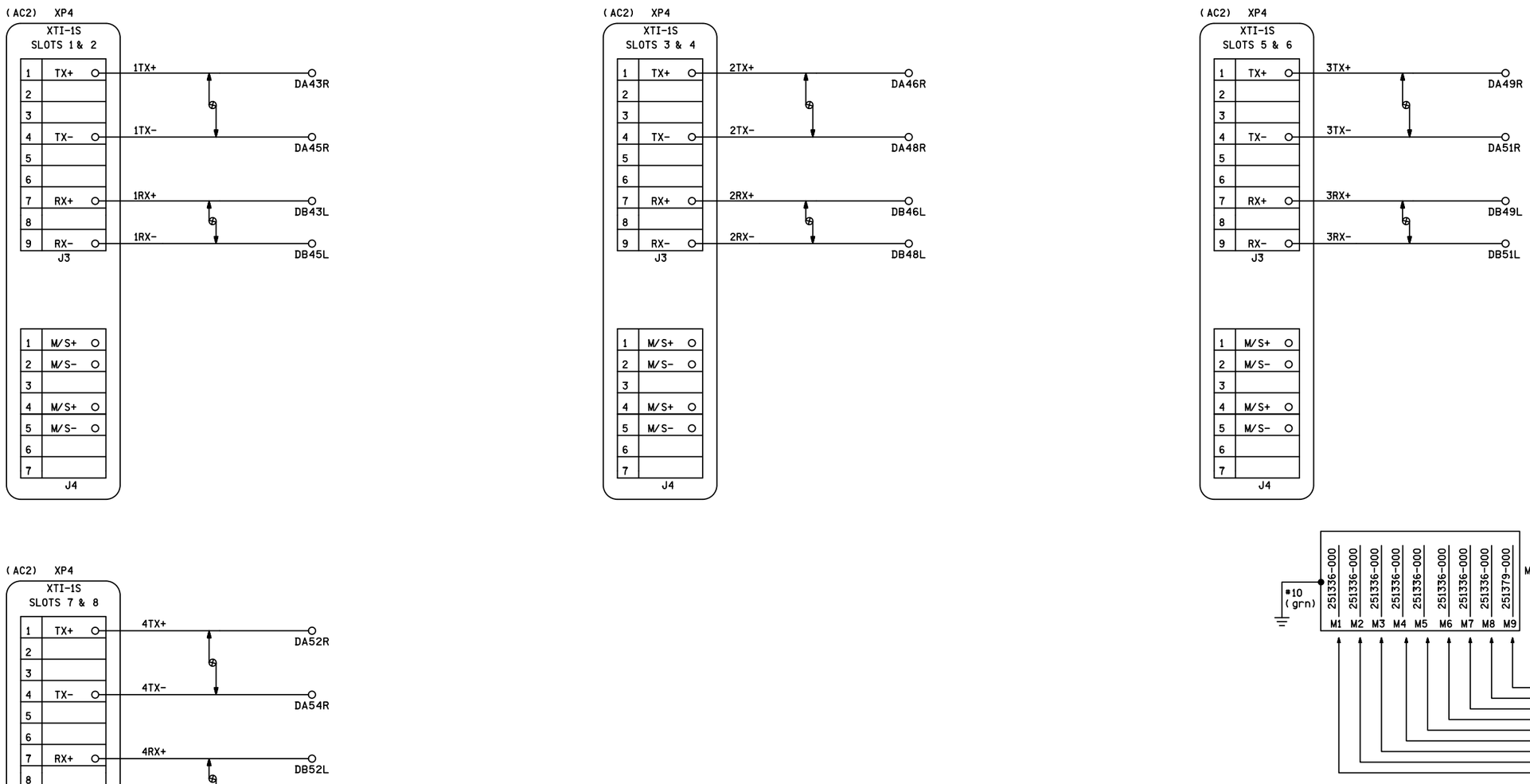

NOTES

1) ALL WIRING TO BE *10 AWG UNLESS OTHERWISE NOTED

DENOTES TWISTED PAIR

IRC 23 FEB 2012

PROPOSED
DESIGN NO. 12-0019
RED-IN YELLOW-OUT

AS INSTALLED
DATE _____
BY _____
(PRINT NAME)

PROPOSED D	M	Y	REVISIONS	D	C	COMPLETED D	M	Y	C

REGION SOUTHERN
SUB. LEITHTON 332

SIGNALS AND COMMUNICATIONS HOMEWOOD
23 FEBRUARY 2012
DES. PWW
CH. BJW

ELECTROLOGIXS XP4 UNIT 1
TRACK 1, 2, 3 & 4 MODULE CONNECTIONS
LAKE ZURICH, IL
GILMER RD.

LEI-056.89-02

DOT# 260 500N

lei-056.89-02.dgn
16-MAY-2012

INVENSYS RAIL CORPORATION

DES.: PWW	DATE: 23/02/12	JOB NO.: WCNA10164	
CKD.: BJW	ISSUE DATE: N/A	EST. NO.: UXXE03033	
DRN.: PWW	PLAN NO.: N/A	SHEET 2 OF 19	
P TIME: 12:49	P DATE: 16-MAY-2012	CAD ID.: LEI-056.89-02	

INVENSYS RAIL CORP.
LOUISVILLE DIVISION, LOUISVILLE, KY

PDF COPY

XP4 UNIT 1

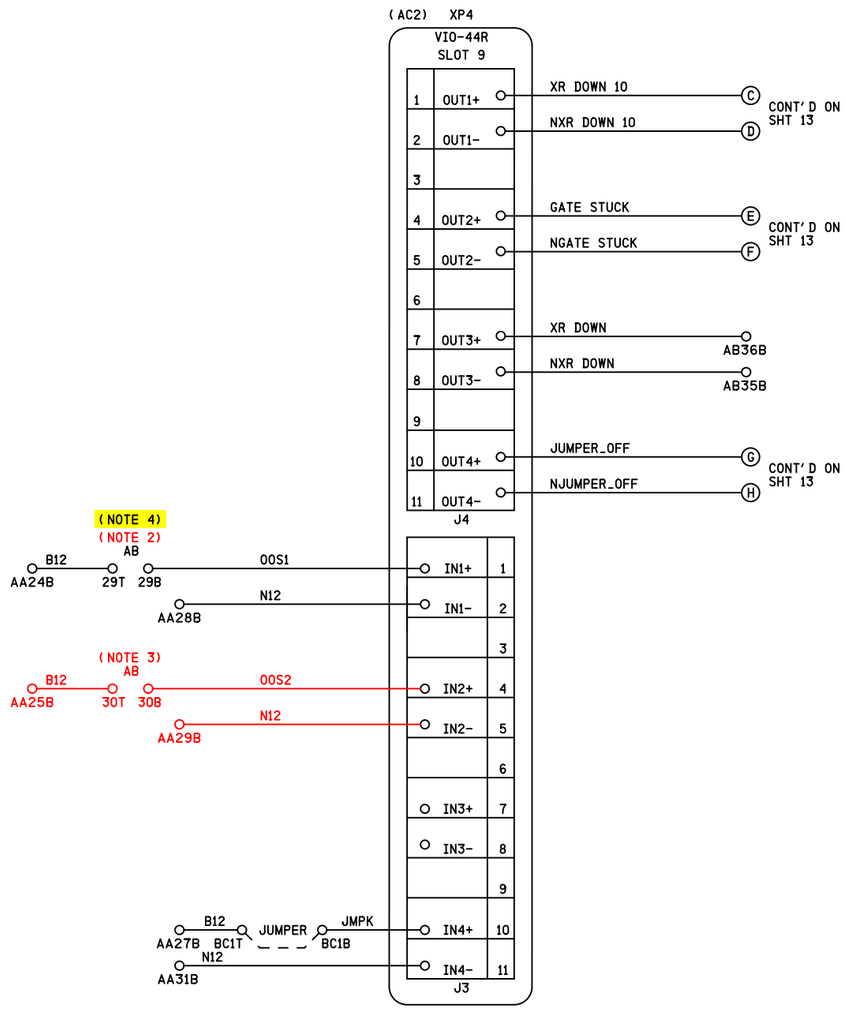

NOTES

1) ALL WIRING TO BE #16 AWG UNLESS OTHERWISE NOTED

2) TO TAKE OS TRACK 1 (T1, T2 &T3 & T5) OUT OF SERVICE, JUMPER AB29T TO AB29B

3) TO TAKE OS TRACK 2 (T4) OUT OF SERVICE, JUMPER AB30T TO AB30B

DENOTES TWISTED PAIR

IRC 23 FEB 2012

PROPOSED
DESIGN NO. 12-0019
RED-IN YELLOW-OUT

AS INSTALLED
DATE _____
BY _____
(PRINT NAME)

PROPOSED D	M	Y	REVISIONS	D	C	COMPLETED D	M	Y	C
16	05	12	OUT OF SERVICE REVISED	NAD	BJW				

REGION SOUTHERN
SUB. LEITHTON 332

SIGNALS AND COMMUNICATIONS HOMEWOOD
23 FEBRUARY 2012
DES. PWW
CH. BJW

ELECTROLOGIXS XP4 UNIT 1
VIO-44R MODULE CONNECTIONS
LAKE ZURICH, IL
GILMER RD.

LEI-056.89-03

DOT# 260 500N

REVISIONS				
NO.	DATE	BY	DESCRIPTION	APP. BY
1				
2				
3				
4				
5				

lei-056.89-03.dgn
16-MAY-2012

INVENSYS RAIL CORPORATION

DES.: PWW	DATE: 23/02/12	JOB NO.: WCNAI0164	
CKD.: BJW	ISSUE DATE: N/A	EST. NO.: JXXE03033	
DRN.: PWW	PLAN NO.: N/A	SHEET 3 OF 19	
P TIME: 12:49	P DATE: 16-MAY-2012	CAD ID.: LEI-056.89-03	

INVENSYS RAIL CORP.
LOUISVILLE DIVISION, LOUISVILLE, KY

PDF COPY

lei-056.89-04.dgn
16-MAY-2012

REVISIONS				
NO.	DATE	BY	DESCRIPTION	APP. BY
1				
2				
3				
4				
5				

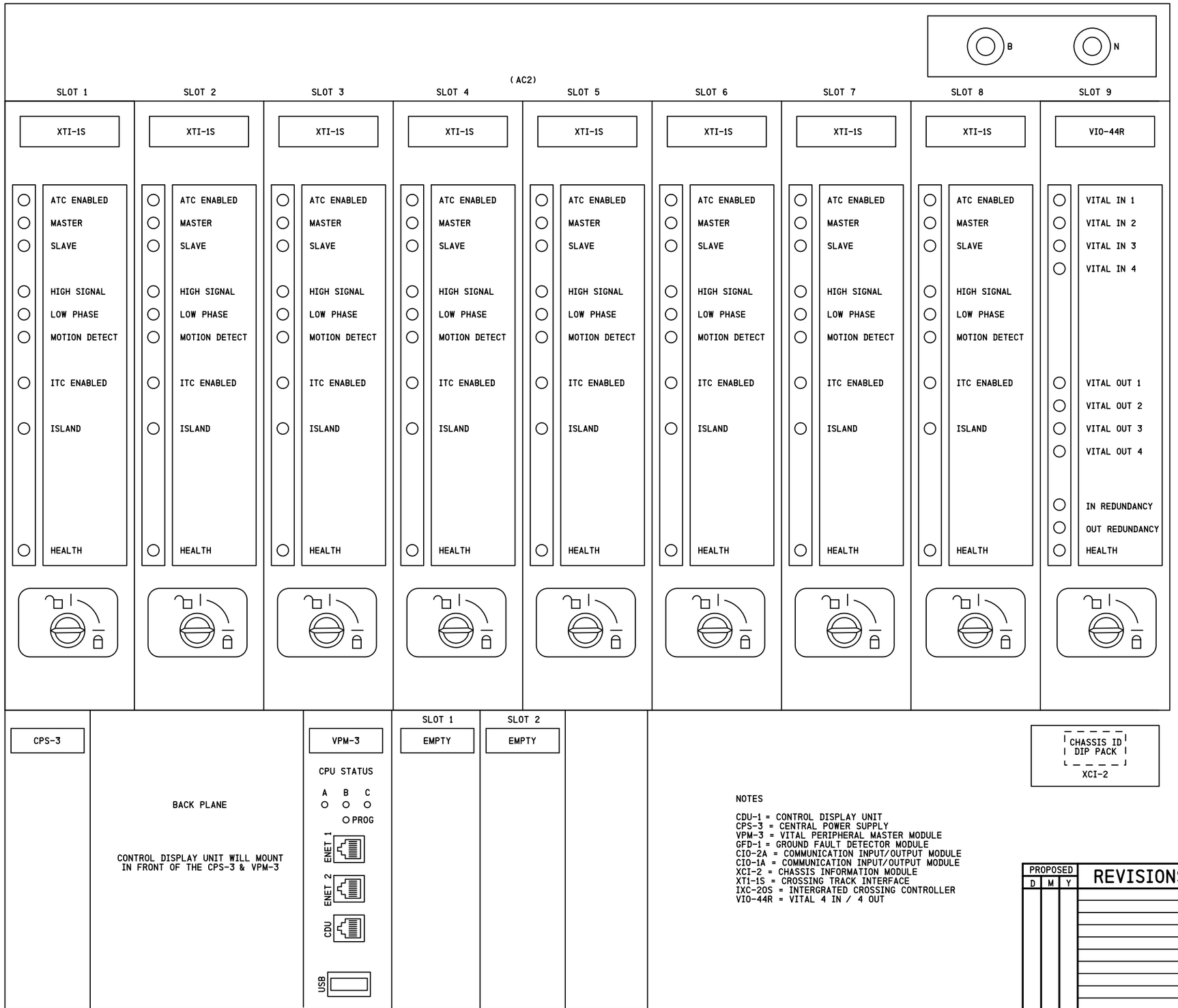

ELECTROLOGIXS COMMUNICATION NOTES:

SERIAL PORT 1 (VPM-2+ & VPM-3)
- -GENISYS
- -SCS-128
- -LCP (MUST USE EXTERNAL CURRENT LOOP ADAPTER P/N 203051-000 FOR GENERIC/CUSTOM LCP UNITS OR CIO-2A TO SOFTWARE PANEL)
- -UCE

SERIAL PORT 2 & 3 (VPM-2+ & VPM-3)
- -ATCS (MUST USE CIO-MDA TO RADIO)
- -LCP (MUST USE EXTERNAL CURRENT LOOP ADAPTER P/N 203051-000 FOR GENERIC/CUSTOM LCP UNITS OR CIO-2A TO SOFTWARE PANEL)
- -HAWK
- -REMOTE (RP2000)

ETHERNET (IP-BASED PROTOCOLS VPM-3 ONLY)
GENISYS
REMOTE (RP2000)

NOTES

CDU-1 = CONTROL DISPLAY UNIT
CPS-3 = CENTRAL POWER SUPPLY
VPM-3 = VITAL PERIPHERAL MASTER MODULE
GFD-1 = GROUND FAULT DETECTOR MODULE
CIO-2A = COMMUNICATION INPUT/OUTPUT MODULE
CIO-1A = COMMUNICATION INPUT/OUTPUT MODULE
XCI-2 = CHASSIS INFORMATION MODULE
XTI-1S = CROSSING TRACK INTERFACE
IXC-20S = INTERGRATED CROSSING CONTROLLER
VIO-44R = VITAL 4 IN / 4 OUT

IRC 23 FEB 2012

PROPOSED
DESIGN NO. 12-0019
RED-IN YELLOW-OUT

AS INSTALLED
DATE _____
BY _____
(PRINT NAME)

PROPOSED			REVISIONS	D	C	COMPLETED			C
D	M	Y				D	M	Y	

REGION SOUTHERN
SUB. LEITHTON 332

SIGNALS AND COMMUNICATIONS HOMEWOOD
23 FEBRUARY 2012
DES. PWW
CH. BJW

IXS XP4 HARDWARE CONFIGURATION
UNIT 1
LAKE ZURICH, IL
GILMER RD.

LEI-056.89-04

DOT# 260 500N

INVENSYS RAIL CORPORATION			
DES.: PWW	DATE: 23/02/12	JOB NO.: WCNAI0164	
CKD.: BJW	ISSUE DATE: N/A	EST. NO.: JXXE03033	
DRN.: PWW	PLAN NO.: N/A	SHEET 4 OF 19	
P TIME: 12:49	P DATE: 16-MAY-2012	CAD ID.: LEI-056.89-04	

PDF COPY

XP4 SETUP UNIT #1

PROGRAM NAME	GILMER ROAD	CABINET ID	0000	CHECKSUM		CRC	

MDR SETUP																	
MDR *		MDR1				MDR2				MDR3				MDR4			
WARNING TIME		30				30				30				30			
CW/ MD		CW				CW				CW				CW			
CWE-WT		80				NA				80				N/A			
AUX RECVR DLY		5				NA				5				N/A			
TRACK *		TK1	TK2	TK3	TK4	TK1	TK2	TK3	TK4	TK1	TK2	TK3	TK4	TK1	TK2	TK3	TK4
TRACK ASSIGNED		ASSIGNED	N/A	N/A	N/A	N/A	ASSIGNED	N/A	N/A	N/A	N/A	ASSIGNED	N/A	N/A	ASSIGNED	N/A	N/A
OFFSET DISTANCE		0	N/A	N/A	N/A	N/A	0	N/A	N/A	N/A	N/A	233	N/A	N/A	671	N/A	N/A
MD RESTART		5	N/A	N/A	N/A	N/A	5	N/A	N/A	N/A	N/A	5	N/A	N/A	5	N/A	N/A
SUDDEN SHUNT ZONE		DISABLED	N/A	N/A	N/A	N/A	DISABLED	N/A	N/A	N/A	N/A	DISABLED	N/A	N/A	ENABLED	N/A	N/A
POSITIVE START	PSEN	DISABLED	N/A	N/A	N/A	N/A	DISABLED	N/A	N/A	N/A	N/A	DISABLED	N/A	N/A	DISABLED	N/A	N/A
	PSRX	0	N/A	N/A	N/A	N/A	0	N/A	N/A	N/A	N/A	0	N/A	N/A	0	N/A	N/A
	PST	0	N/A	N/A	N/A	N/A	0	N/A	N/A	N/A	N/A	0	N/A	N/A	0	N/A	N/A
POST JOINT DETECT	PJEN	ENABLE	N/A	N/A	N/A	N/A	DISABLED	N/A	N/A	N/A	N/A	ENABLE	N/A	N/A	ENABLED	N/A	N/A
	PJRX	15	N/A	N/A	N/A	N/A	0	N/A	N/A	N/A	N/A	15	N/A	N/A	*	N/A	N/A
	PJDET	15	N/A	N/A	N/A	N/A	0	N/A	N/A	N/A	N/A	15	N/A	N/A	15	N/A	N/A

* FIELD ADJUSTMENT

TRACK SETUP					
BASIC SETUP		TRACK 1	TRACK 2	TRACK 3	TRACK 4
FREQUENCY		430 HZ	348 HZ	970 HZ	285 HZ
MASTER/ SLAVE		MASTER	MASTER	MASTER	MASTER
TCA (TRANSMITTER CHECK)		*	*	*	*
DIRECTION MODE		U	B	U	U
LIA (LUMPED IMPEDANCE)		*	*	*	*
NBS COMP RX		*	*	*	*
AUTO RX		*	*	*	*
APPROACH LENGTH		665 FT	2320 FT	448 FT	1655 FT
ADVANCED SETUP		TRACK 1	TRACK 2	TRACK 3	TRACK 2
MOTION DET TIMER	MDEN	DISABLED	DISABLED	DISABLED	DISABLED
	MDTT	NA	NA	NA	NA
FALSE SHUNT TIMER	FSEN	DISABLED	DISABLED	DISABLED	DISABLED
	FSRX	NA	NA	NA	NA
	FST	NA	NA	NA	NA
APPROACH RELEASE TIMER	AREN	DISABLED	DISABLED	DISABLED	DISABLED
	ARRX	NA	NA	NA	NA
	ART	NA	NA	NA	NA
LOSS OF SHUNT TIMER		30	30	30	30
IJ-LOS TIMER		5	5	5	5
MAINTENANCE MENU		TRACK 1	TRACK 2	TRACK 3	TRACK 1
ENABLE/ DISABLE		ENABLED	ENABLED	ENABLED	ENABLED
DISABLE TIMEOUT		NA	NA	NA	NA
BALLAST COMP		*	*	*	*
PHASE COMP		*	*	*	*

ISLAND SETUP INFORMATION				
TRACK *	TRACK 1	TRACK 2	TRACK 3	TRACK 4
ENABLE/ DISABLE	ENABLED	DISABLED	DISABLED	DISABLED
FREQUENCY	4.0	N/A	N/A	N/A
LOSSOF SHUNT	4	N/A	N/A	N/A
FAULT DELAY	1	N/A	N/A	N/A

* FIELD ADJUSTMENT

EXECUTIVE SOFTWARE INFORMATION	
NAME	
REV	
PART *	
CHECKSUM	CRC
FAULT DELAY	

APPLICATION SOFTWARE INFORMATION	
NAME	1xs_05689 d1
REV	
CHECKSUM	CRC
CHASSIS ID* 2	ID STRAPPING

IXC SETUP INFORMATION				
	IXC 1	IXC 2	IXC 3	IXC 4
LAMP 1 BANK				
LAMP 2 BANK				
GATE 1 DELAY				
GATE 2 DELAY				
FLASH RATE				

IRC 23 FEB 2012

PROPOSED
DESIGN NO. 12-0019
RED-IN YELLOW-OUT

AS INSTALLED
DATE _____
BY _____
(PRINT NAME)

PROPOSED D	M	Y	REVISIONS	D	C	COMPLETED D	M	Y	C

REGION SOUTHERN
SUB. LEITHTON 332

SIGNALS AND COMMUNICATIONS HOMEWOOD
23 FEBRUARY 2012
DES. PWW
CH. BJW

ELECTROLOGIXS XP4 UNIT 1
PROGRAM INFORMATION
LAKE ZURICH, IL
GILMER RD.

LEI-056.89-05

DOT# 260 500N

REVISIONS			
NO.	DATE	BY	DESCRIPTION	APP. BY
1				
2				
3				
4				
5				

lei-056.89-05.dgn
16-MAY-2012

INVENSYS RAIL CORPORATION
DES.: PWW DATE: 23/02/12 JOB NO.: WCNA10164
CKD.: BJW ISSUE DATE: N/A EST. NO.: JXXE03033
DRN.: PWW PLAN NO.: N/A SHEET 5 OF 19
P TIME: 12:49 P DATE: 16-MAY-2012 CAD ID.: LEI-056.89-05

INVENSYS RAIL CORP.
LOUISVILLE DIVISION, LOUISVILLE, KY

PDF COPY

XP4 UNIT 2

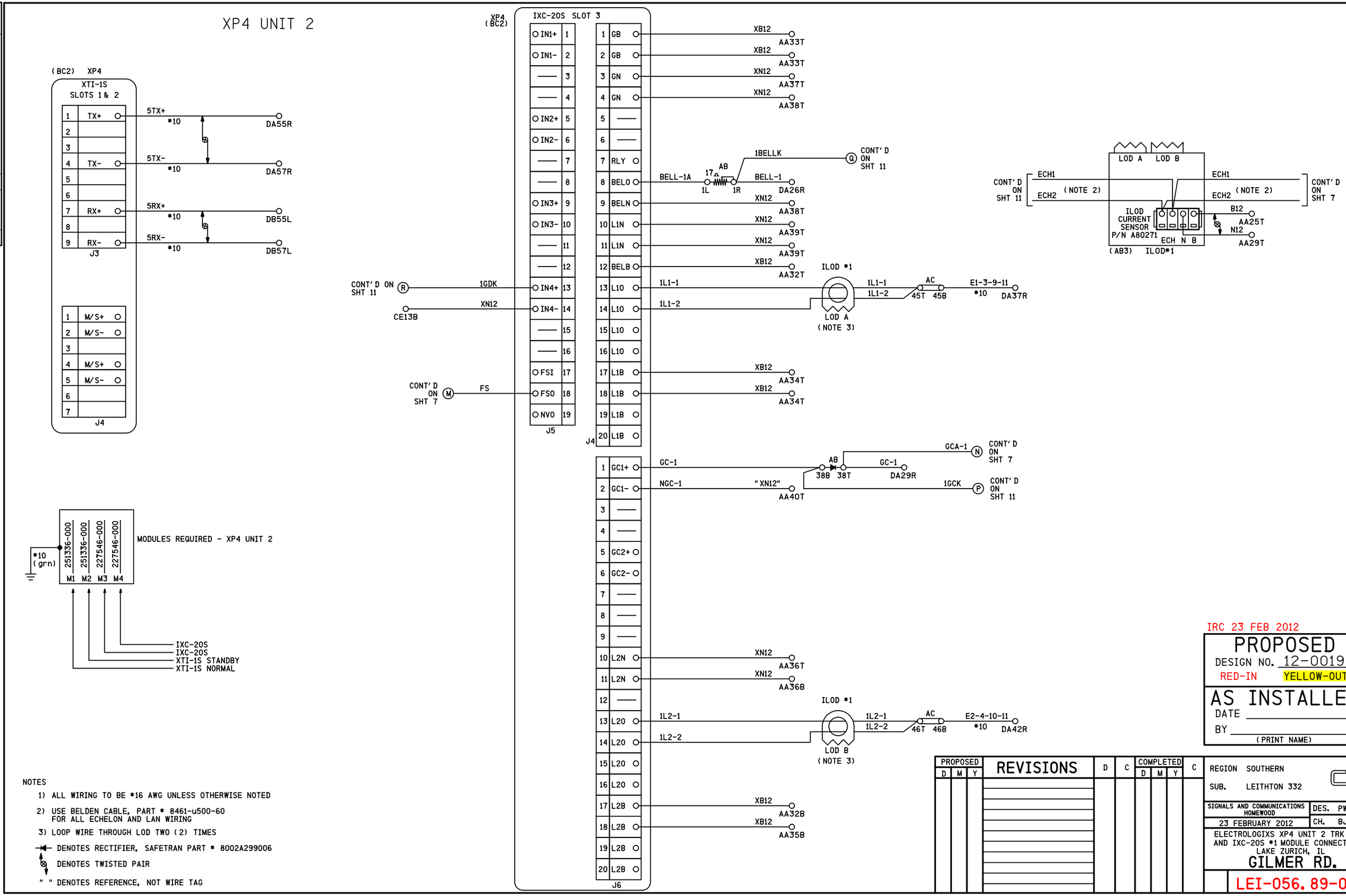

NOTES

1) ALL WIRING TO BE #16 AWG UNLESS OTHERWISE NOTED
2) USE BELDEN CABLE, PART # 8461-u500-60 FOR ALL ECHELON AND LAN WIRING
3) LOOP WIRE THROUGH LOD TWO (2) TIMES

DENOTES RECTIFIER, SAFETRAN PART # 8002A299006

DENOTES TWISTED PAIR

" " DENOTES REFERENCE, NOT WIRE TAG

REVISIONS				
NO.	DATE	BY	DESCRIPTION	APP. BY
1				
2				
3				
4				
5				

INVENSYS RAIL CORPORATION

DES.: PWW	DATE: 23/02/12	JOB NO.: WCNA10164	
CKD.: BJW	ISSUE DATE: N/A	EST. NO.: JXXE03033	
DRN.: PWW	PLAN NO.: N/A	SHEET 6 OF 19	
P TIME: 12:49	P DATE: 16-MAY-2012	CAD ID.: LEI-056.89-06	

INVENSYS RAIL CORP.
LOUISVILLE DIVISION, LOUISVILLE, KY

lei-056.89-06.dgn
16-MAY-2012

IRC 23 FEB 2012

PROPOSED
DESIGN NO. 12-0019
RED-IN YELLOW-OUT

AS INSTALLED
DATE
BY
(PRINT NAME)

PROPOSED			REVISIONS	D	C	COMPLETED			C
D	M	Y				D	M	Y	

REGION SOUTHERN
SUB. LEITHTON 332

SIGNALS AND COMMUNICATIONS HOMEWOOD
23 FEBRUARY 2012
DES. PWW
CH. BJW

ELECTROLOGIXS XP4 UNIT 2 TRK 5 AND IXC-20S #1 MODULE CONNECTIONS
LAKE ZURICH, IL
GILMER RD.

LEI-056.89-06

DOT# 260 500N

PDF COPY

REVISIONS				
NO.	DATE	BY	DESCRIPTION	APP. BY
1				
2				
3				
4				
5				

lei-056, 89-07, dgn
16-MAY-2012

XP4 UNIT 2

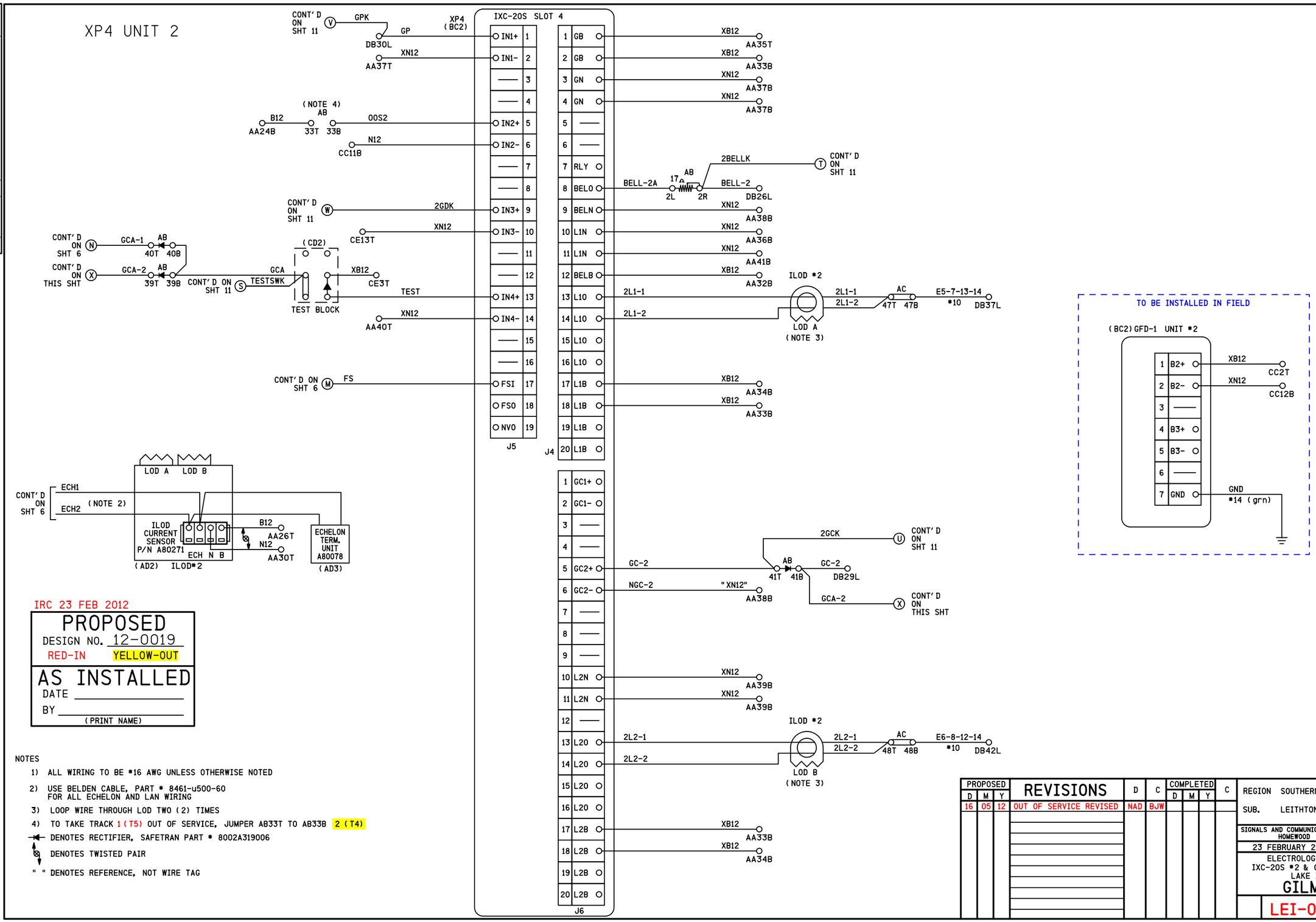

IRC 23 FEB 2012

PROPOSED
DESIGN NO. 12-0019
RED-IN YELLOW-OUT

AS INSTALLED
DATE _____
BY _____
(PRINT NAME)

NOTES

1) ALL WIRING TO BE #16 AWG UNLESS OTHERWISE NOTED
2) USE BELDEN CABLE, PART # 8461-u500-60 FOR ALL ECHELON AND LAN WIRING
3) LOOP WIRE THROUGH LOD TWO (2) TIMES
4) TO TAKE TRACK 1 (T5) OUT OF SERVICE, JUMPER AB33T TO AB33B 2 (T4)

DENOTES RECTIFIER, SAFETRAN PART # 8002A319006

DENOTES TWISTED PAIR

" " DENOTES REFERENCE, NOT WIRE TAG

INVENSYS RAIL CORPORATION			
DES.: PWW	DATE: 23/02/12	JOB NO.: WCNAI0164	
CKD.: BJW	ISSUE DATE: N/A	EST. NO.: JXXE03033	
DRN.: PWW	PLAN NO.: N/A	SHEET 7 OF 19	
P TIME: 12:49	P DATE: 16-MAY-2012	CAD ID.: LEI-056.89-07	

PROPOSED			REVISIONS	D	C	COMPLETED			C
D	M	Y				D	M	Y	
16	05	12	OUT OF SERVICE REVISED	NAD	BJW				

REGION SOUTHERN
SUB. LEITHTON 332

SIGNALS AND COMMUNICATIONS HOMEWOOD
23 FEBRUARY 2012
DES. PWW
CH. BJW

ELECTROLOGIXS XP4 UNIT 2
IXC-20S #2 & GFD MOD CONNECTIONS
LAKE ZURICH, IL
GILMER RD.

LEI-056.89-07

DOT# 260 500N

INVENSYS RAIL CORP.
LOUISVILLE DIVISION, LOUISVILLE, KY

PDF COPY

lei-056, 89-08, dgn
16-MAY-2012

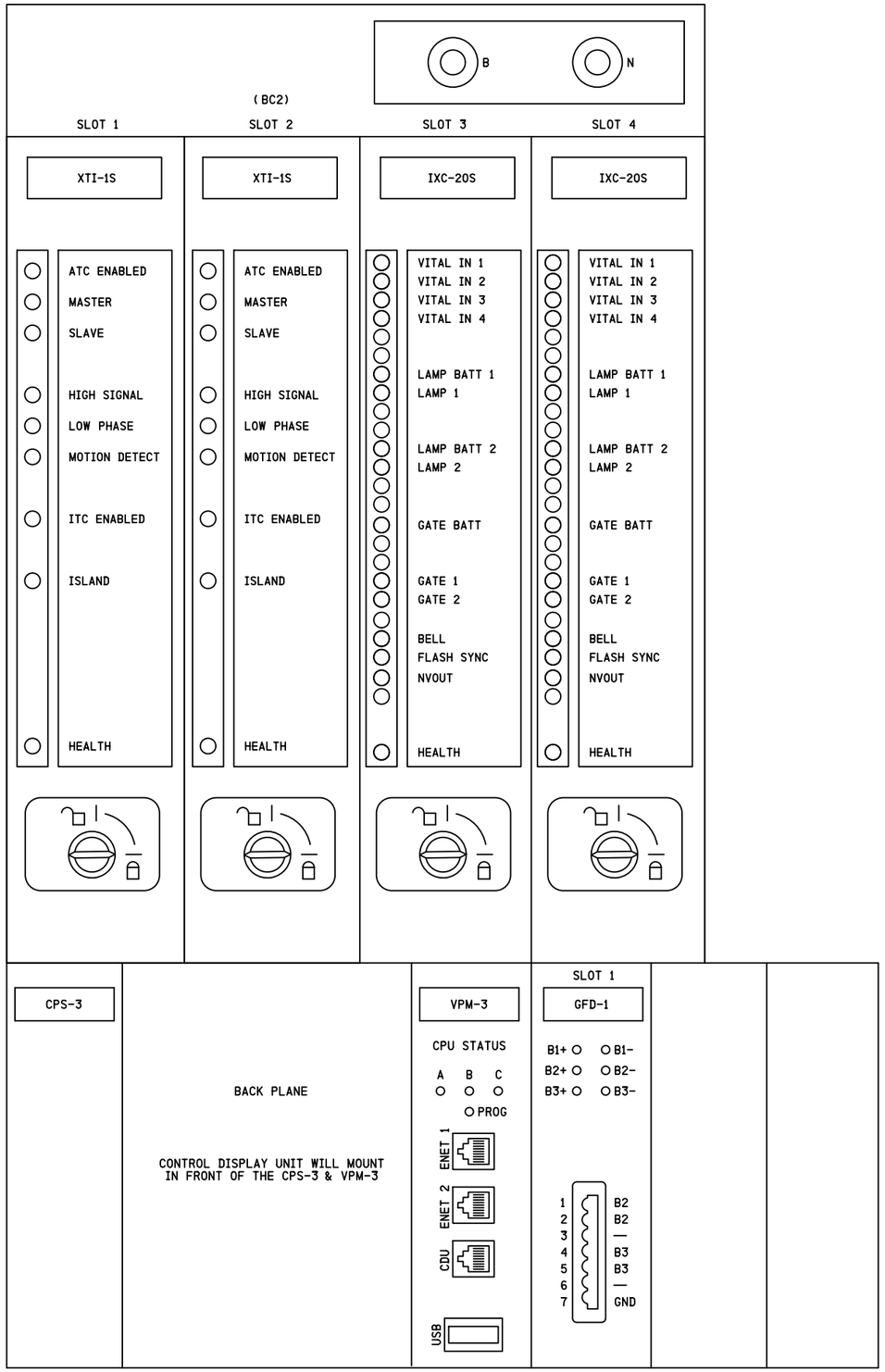

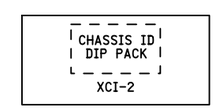

ELECTROLOGIXS COMMUNICATION NOTES:

SERIAL PORT 1 (VPM-2+ & VPM-3)
- -GENISYS
- -SCS-128
- -LCP (MUST USE EXTERNAL CURRENT LOOP ADAPTER P/N 203051-000 FOR GENERIC/CUSTOM LCP UNITS OR CIO-2A TO SOFTWARE PANEL)
- -UCE

SERIAL PORT 2 & 3 (VPM-2+ & VPM-3)
- -ATCS (MUST USE CIO-MDA TO RADIO)
- -LCP (MUST USE EXTERNAL CURRENT LOOP ADAPTER P/N 203051-000 FOR GENERIC/CUSTOM LCP UNITS OR CIO-2A TO SOFTWARE PANEL)
- -HAWK
- -REMOTE (RP2000)

ETHERNET (IP-BASED PROTOCOLS VPM-3 ONLY)
GENISYS
REMOTE (RP2000)

NOTES

CDU-1 = CONTROL DISPLAY UNIT
CPS-3 = CENTRAL POWER SUPPLY
VPM-3 = VITAL PERIPHERAL MASTER MODULE
GFD-1 = GROUND FAULT DETECTOR MODULE
CIO-2A = COMMUNICATION INPUT/OUTPUT MODULE
CIO-1A = COMMUNICATION INPUT/OUTPUT MODULE
XCI-2 = CHASSIS INFORMATION MODULE
XT1-1S = CROSSING TRACK INTERFACE
IXC-20S = INTERGRATED CROSSING CONTROLLER
VIO-44R = VITAL 4 IN / 4 OUT

IRC 23 FEB 2012

PROPOSED
DESIGN NO. 12-0019
RED-IN YELLOW-OUT

AS INSTALLED
DATE _____
BY _____
(PRINT NAME)

REVISIONS											
NO.	DATE	BY	DESCRIPTION	APP.	BY	PROPOSED D	M	Y	D	C	COMPLETED D M Y C
1											
2											
3											
4											
5											

REGION SOUTHERN
SUB. LEITHTON 332

SIGNALS AND COMMUNICATIONS HOMEWOOD
23 FEBRUARY 2012
DES. PWW
CH. BJW

IXS XP4 HARDWARE CONFIGURATION
UNIT 2
LAKE ZURICH, IL
GILMER RD.

LEI-056.89-08

DOT# 260 500N

INVENSYS RAIL CORPORATION

DES.: PWW	DATE: 23/02/12	JOB NO.: WCNA10164	
CKD.: BJW	ISSUE DATE: N/A	EST. NO.: JXXE03033	
DRN.: PWW	PLAN NO.: N/A	SHEET 8 OF 19	
P TIME: 12:49	P DATE: 16-MAY-2012	CAD ID.: LEI-056.89-08	

PDF COPY

XP4 SETUP UNIT #2

PROGRAM NAME	GILMER ROAD	CABINET ID	0000	CHECKSUM		CRC	

MDR SETUP

MDR *		MDR1				MDR2				MDR3				MDR4			
WARNING TIME		30															
CW/ MD		CW															
CWE-WT		N/A															
AUX RECVR DLY		N/A															
TRACK *		TK1	TK2	TK3	TK4	TK1	TK2	TK3	TK4	TK1	TK2	TK3	TK4	TK1	TK2	TK3	TK4
TRACK ASSIGNED		ASSIGNED	N/A	N/A	N/A												
OFFSET DISTANCE		665	N/A	N/A	N/A												
MD RESTART		5	N/A	N/A	N/A												
SUDDEN SHUNT ZONE		DISABLED	N/A	N/A	N/A												
POSITIVE START	PSEN	ENABLED	N/A	N/A	N/A												
	PSRX	*	N/A	N/A	N/A												
	PST	0	N/A	N/A	N/A												
POST JOINT DETECT	PJEN	ENABLED	N/A	N/A	N/A												
	PJRX	*	N/A	N/A	N/A												
	PJDET	15	N/A	N/A	N/A												

* FIELD ADJUSTMENT

TRACK SETUP

BASIC SETUP		TRACK 1	TRACK 2	TRACK 3	TRACK 4
FREQUENCY		430 HZ			
MASTER/ SLAVE		MASTER			
TCA (TRANSMITTER CHECK)		*			
DIRECTION MODE		B			
LIA (LUMPED IMPEDANCE)		*			
NBS COMP RX		*			
AUTO RX		*			
APPROACH LENGTH		1655 FT			
ADVANCED SETUP		TRACK 1			
MOTION DET TIMER	MDEN	DISABLED			
	MDTT	NA			
FALSE SHUNT TIMER	FSEN	DISABLED			
	FSRX	NA			
	FST	NA			
APPROACH RELEASE TIMER	AREN	DISABLED			
	ARRX	NA			
	ART	NA			
LOSS OF SHUNT TIMER		30			
IJ-LOS TIMER		5			
MAINTENANCE MENU		TRACK 1			
ENABLE/ DISABLE		ENABLED			
DISABLE TIMEOUT		NA			
BALLAST COMP		*			
PHASE COMP		*			

ISLAND SETUP INFORMATION

TRACK *	TRACK 1	TRACK 2	TRACK 3	TRACK 4
ENABLE/ DISABLE	DISABLED	N/A	N/A	N/A
FREQUENCY	N/A	N/A	N/A	N/A
LOSSOF SHUNT	N/A	N/A	N/A	N/A
FAULT DELAY	N/A	N/A	N/A	N/A

* FIELD ADJUSTMENT

EXECUTIVE SOFTWARE INFORMATION

NAME	
REV	
PART *	
CHECKSUM	CRC
FAULT DELAY	

APPLICATION SOFTWARE INFORMATION

NAME	!xs_05690 d1
REV	
CHECKSUM	CRC
CHASSIS ID* 3	ID STRAPPING

IXC SETUP INFORMATION

	IXC 1	IXC 2	IXC 3	IXC 4
LAMP 1 BANK				
LAMP 2 BANK				
GATE 1 DELAY				
GATE 2 DELAY				
FLASH RATE				

IRC 23 FEB 2012

PROPOSED
DESIGN NO. 12-0019
RED-IN YELLOW-OUT

AS INSTALLED
DATE _____
BY _____
(PRINT NAME)

PROPOSED D	M	Y	REVISIONS	D	C	COMPLETED D	M	Y	C

REGION SOUTHERN
SUB. LEITHTON 332

SIGNALS AND COMMUNICATIONS HOMEWOOD
23 FEBRUARY 2012
DES. PWW
CH. BJW

ELECTROLOGIXS XP4 UNIT 2
PROGRAM INFORMATION
LAKE ZURICH, IL
GILMER RD.

LEI-056.89-09

DOT# 260 500N

lei-056.89-09.dgn
16-MAY-2012

REVISIONS			
NO.	DATE	BY	DESCRIPTION	APP. BY
1				
2				
3				
4				
5				

INVENSYS RAIL CORPORATION

DES.: PWW	DATE: 23/02/12	JOB NO.: WCNA10164	
CKD.: BJW	ISSUE DATE: N/A	EST. NO.: JXXE03033	
DRN.: PWW	PLAN NO.: N/A	SHEET 9 OF 19	
P TIME: 12:49	P DATE: 16-MAY-2012	CAD ID.: LEI-056.89-09	

INVENSYS RAIL CORP.
LOUISVILLE DIVISION, LOUISVILLE, KY

PDF COPY

REVISIONS				
NO.	DATE	BY	DESCRIPTION	APP. BY
1				
2				
3				
4				
5				

NOTES

(1) ALL CABLE IS 6 CONDUCTOR (MINIMUM) #22 STRANDED WITH A SINGLE SHIELD SURROUNDING ALL INTERNAL CONDUCTORS

(2) ALL MALE/FEMALE DESIGNATIONS REFER TO THE CABLE TERMINATIONS NOT THE EQUIPMENT. ALL CONNECTOR HOODS ARE METAL WITH AN ELECTRICAL CONNECTION TO THE SHIELD AND LABELLED APPROPRIATELY.

(3) ALL EQUIPMENT TO BE BONDED TO PRIME GROUND

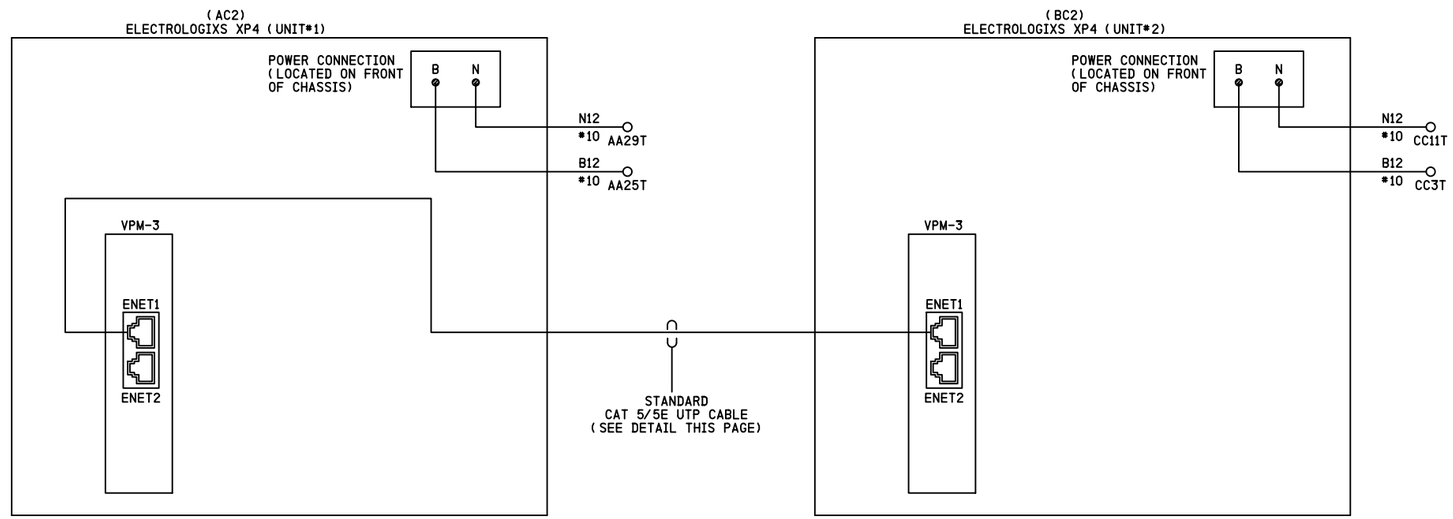

EIA/TIA 568B WIRING STANDARD
(STANDARD CABLE)

PIN#	COLOR	DESCRIPTION
1	WHITE/ORANGE	TXDATA +
2	ORANGE	TXDATA -
3	WHITE/GREEN	RCDATA +
4	BLUE	UNUSED
5	WHITE/BLUE	UNUSED
6	GREEN	RCDATA -
7	WHITE/BROWN	UNUSED
8	BROWN	UNUSED

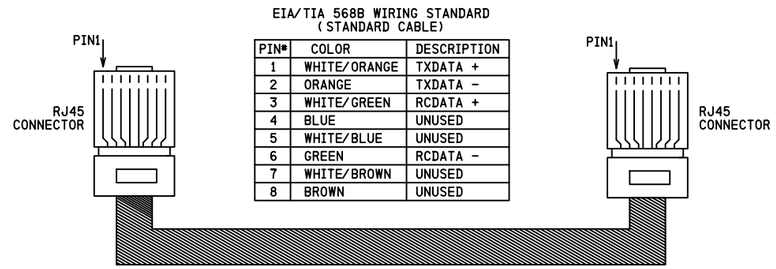

CAT 5/5E UTP CABLE DETAIL

IRC 23 FEB 2012

PROPOSED
DESIGN NO. 12-0019
RED-IN YELLOW-OUT

AS INSTALLED
DATE _____
BY _____
(PRINT NAME)

PROPOSED			REVISIONS	D	C	COMPLETED			C
D	M	Y				D	M	Y	

REGION SOUTHERN
SUB. LEITHTON 332

SIGNALS AND COMMUNICATIONS HOMEWOOD
23 FEBRUARY 2012
DES. PWW
CH. BJW

ELECTROLOGIXS XP4 UNITS 1 & 2
POWER SUPPLY & COMM. CIRCUITS
LAKE ZURICH, IL
GILMER RD.

LEI-056.89-10

DOT# 260 500N

lei-056.89-10.dgn
16-MAY-2012

INVENSYS RAIL CORPORATION			
DES.: PWW	DATE: 23/02/12	JOB NO.: WCNA10164	
CKD.: BJW	ISSUE DATE: N/A	EST. NO.: JXXE03033	
DRN.: PWW	PLAN NO.: N/A	SHEET 10 OF 19	
P TIME: 12:49	P DATE: 16-MAY-2012	CAD ID.: LEI-056.89-10	

INVENSYS RAIL CORP.
LOUISVILLE DIVISION, LOUISVILLE, KY

PDF COPY

REVISIONS				
NO.	DATE	BY	DESCRIPTION	APP. BY
1				
2				
3				
4				
5				

lei-056, 89-11. dgn
16-MAY-2012

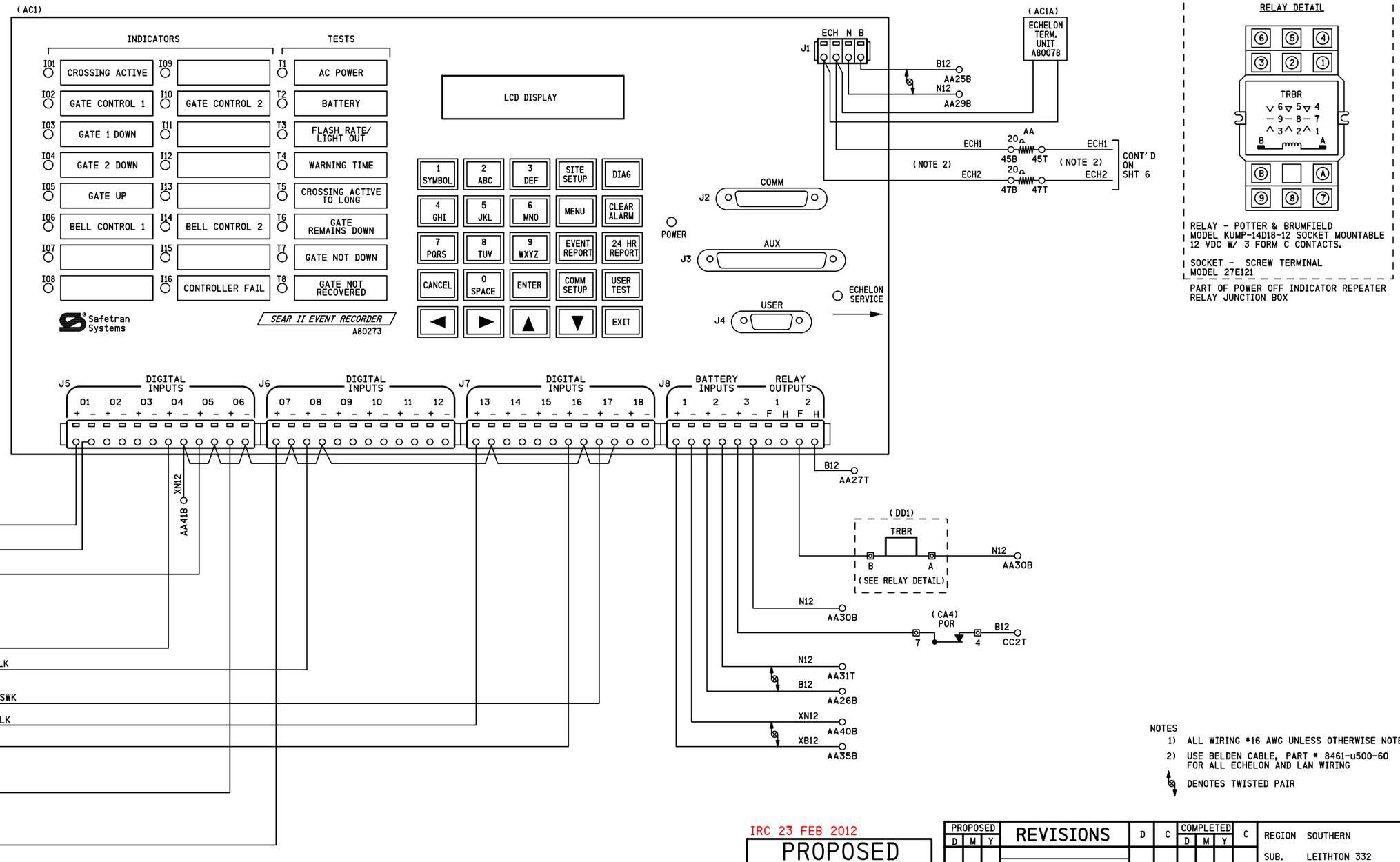

NOTES

1) ALL WIRING #16 AWG UNLESS OTHERWISE NOTED
2) USE BELDEN CABLE, PART # 8461-u500-60 FOR ALL ECHELON AND LAN WIRING

DENOTES TWISTED PAIR

IRC 23 FEB 2012

PROPOSED
DESIGN NO. 12-0019
RED-IN YELLOW-OUT

AS INSTALLED
DATE
BY
(PRINT NAME)

PROPOSED D	M	Y	REVISIONS	D	C	COMPLETED D	M	Y	C

REGION SOUTHERN
SUB. LEITHTON 332

SIGNALS AND COMMUNICATIONS HOMEWOOD
23 FEBRUARY 2012
DES. PWW
CH. BJW

SEAR II
EVENT ANALYZER/RECORDER
LAKE ZURICH, IL
GILMER RD.

LEI-056. 89-11

DOT# 260 500N

INVENSYS RAIL CORPORATION		
DES. : PWW	DATE: 23/02/12	JOB NO. : WCNA10164
CKD. : BJW	ISSUE DATE: N/A	EST. NO. :JXXE03033
DRN. : PWW	PLAN NO. :N/A	SHEET 11 OF 19
P TIME:12:49	P DATE: 16-MAY-2012	CAD ID. :LEI-056. 89-11

INVENSYS RAIL CORP.
LOUISVILLE DIVISION, LOUISVILLE, KY

PDF COPY

REVISIONS				
NO.	DATE	BY	DESCRIPTION	APP. BY
1				
2				
3				
4				
5				

MENU ITEMS

RESET NAMES/MODULES	NO	
AC OFF ALARM TIME (minutes)	60	MIN.
MINIMUM NORMAL WARNING TIME (seconds)	20	SEC.
DESIRED WARNING TIME (seconds)	30	SEC.
IGNORE WARNING TIMES BELOW (seconds)	3	SEC.
PRERING/STNSTOP TIME (minutes)	10	MIN.
SWITCH MOVE TIMER (minutes)	30	MIN.
HOW MANY GATES?	2	
GATE 1 DOWN	☐ NOT ENERGIZED	☑ ENERGIZED
GATE 2 DOWN	☐ NOT ENERGIZED	☑ ENERGIZED
GATE 3 DOWN	☑ NOT ENERGIZED	☐ ENERGIZED
GATE 4 DOWN	☑ NOT ENERGIZED	☐ ENERGIZED
HOW MANY SETS OF GCPS?	0	
(IF 1 SET IS SELECTED) DOES GCP HAVE STANDBY?	N/A	
(IF 2 SETS ARE SELECTED) DOES 2ND GCP HAVE STANDBY?	N/A	
HOW MANY ILODS?	2	
(IF 1 OR MORE IS SELECTED) MINIMUM FLASH RATE	55	
HOW MANY SSCCIII UNITS?	0	
1SSCC TESTSWINPUT?	NA	SEC.
GATE NOT DOWN ALARM TIME	15	SEC.
CROSSING ACTIVE ALARM AFTER (minutes)	20	MIN.
FLASHING TROUBLE LIGHT OUTPUT? (NOTE 5)	NO	
DIGITAL INPUTS NAMES	DEFAULT	
(XB14) XB12 LOW VOLTAGE ALARMS (IN TENTHS)	111	
(MB12) B12 LOW VOLTAGE ALARMS (IN TENTHS)	111	
(IF DIGITAL INPUT NAMES IS "USER DEFINED") (SB12) B14 LOW VOLTAGE ALARMS (IN TENTHS)	111	
ALLOW DTMF CONTROL (NOTE 8)	NO	
(IF DTMF CONTROL IS SELECTED) DIGIT #1	N/A	
DIGIT #2	N/A	
DIGIT #3	N/A	
DIGIT #4	N/A	
DIGIT #5	N/A	
VHFC CHANNEL (1 to 8)	N/A	
DTMF TIME-OUT (30 TO 240 SEC.)	180	SEC.
DTMF OUTPUT 2 DELAY (NOTE 6)	N/A	

CURRENT SOFTWARE REVISION:
EXECUTIVE: 9V645-A01Y.bin APPLICATION: CN028B5.CDL

BATTERY INPUT CONFIGURATION

INPUT	USAGE	LABEL	NORMAL RANGE	
1	LIGHT BATTERY	XB12/XN12	MINIMUM LEVEL - 18 VDC	
2	STANDBY BATTERY	B12/N12	MINIMUM LEVEL - 18 VDC	
3	POR	AC/POR	POWER ON > 0.5 VDC	(WHEN REQUIRED)

RELAY OUTPUT CONFIGURATION

OUTPUT	USAGE	LABEL	CONTACT CLOSED	CONTACT OPEN	TOGGLE	
1	TROUBLE LIGHT	TRBLE LITE	OFF	ON	FLASH	(NOTE 5)
2	DTMF OUTPUT 1	DTMFOUT1	ACTIVE	INACTIVE	N/U	
3	DTMF OUTPUT 2	DTMFOUT2	ACTIVE	INACTIVE	N/U	(NOTE 6)

DIGITAL INPUT CONFIGURATION

DIGITAL INPUT	USAGE	LABEL	NORMAL LOGIC STATE
1	MD/GCP 1	MD/GCP1K /NMD/GCP1K (NOTE 2)	1
2	ISLAND 1	ISL1K/NISL1K (NOTE 2)	1
3	GOD	GODK (NOTE 2)	1
4	GATE CONTROL 1	1GCK (NOTE 2)	1
5	GATE UP	GPK (NOTE 2)	1
6	GATE DOWN 1	1GDK (NOTE 3)	0 OR 1 (NOTE 1)
7	GATE DOWN 2	2GDK (NOTE 3)	0 OR 1 (NOTE 1)
8	BELL/LIGHTS 1	1BELLK (NOTE 2)	0
9	MD/GCP 2	MD/GCP2K /NMD/GCP2K (NOTE 2)	1
10	ISLAND 2	ISL2K/NISL2K (NOTE 2)	1
11	WRAP 1 (FR)	1WAK (NOTE 2) (FK)	1
12	WRAP 2 (XAPER)	2WAK (NOTE 2) (XAPEK)	1
13	BELL/LIGHTS 2	2BELLK (NOTE 2)	0
14	GATE DOWN 3	3GDK (NOTE 3)	0 OR 1 (NOTE 1)
15	GATE DOWN 4	4GDK (NOTE 3)	0 OR 1 (NOTE 1)
16	GATE CONTROL 2	2GCK (NOTE 2)	1
17	TEST SWITCH	TESTSWK (NOTE 2)	0
18	DAX1	DAX1 (NOTE 2)	1

LED CONFIGURATION (NOTE 4)

LED	LABEL	OFF=	ON=
01	CROSSING ACTIVE	MD/GCP1K & MD/GCP2K & XK & ISL1K & ISL2K ALL UP	MD/GCP1K OR MD/GCP2K OR XK OR ISL1K OR ISL2K DOWN
02	GATE CONTROL 1	1GCK UP	1GCK DOWN
03	GATE 1 DOWN	1GDK OFF (GATE 1 NOT DOWN)	1GDK ON (GATE 1 DOWN)
04	GATE 2 DOWN	2GDK OFF (GATE 2 NOT DOWN)	2GDK ON (GATE 2 DOWN)
05	GATE(S) UP	GPK ON (GATES UP)	GPK OFF (GATES NOT UP)
06	BELL CONTROL 1	1BELLK OFF	1BELLK ON
07	WRAP 1 (FR)	1WAK UP (FK UP)	1WAK DOWN (FK DOWN)
08	DAX	DAX1-4 ALL UP	DAX1, 2, 3 OR 4 DOWN
09	ISLAND OCCUPIED	ISLAND 1 OR 2 NOT OCCUPIED	ISLAND 1 & ISLAND 2 OCCUPIED
10	GATE CONTROL 2	2GCK UP	2GCK DOWN
11	GATE 3 DOWN	3GDK OFF (GATE 3 NOT DOWN)	3GDK ON (GATE 3 DOWN)
12	GATE 4 DOWN	4GDK OFF (GATE 4 NOT DOWN)	4GDK ON (GATE 4 DOWN)
13	GATE OFF	GOD ON	GOD OFF
14	BELL CONTROL 2	2BELLK OFF	2BELLK ON
15	WRAP 2 (XAPER)	2WAK UP (XAPEK UP)	2WAK DOWN (XAPEK DOWN)
16	CONTROLLER FAIL	CONTROLLER OK	CONTROLLER FAIL

ALARM CONDITIONS (NOTE 7)

ALARM (TEST) LEDS (GREEN LED = NO ALARM)

AC POWER (T1) (WHEN BATTERY INPUT #3 USED)
- RED FLASHING - AC CURRENTLY OFF, MORE THAN THE USER SELECTED TIME.
- RED STEADY - AC WAS OFF MORE THAN USER TIME SELECTED, BUT HAS SINCE BEEN RESTORED.
- YELLOW FLASHING - AC CURRENTLY OFF, FOR LESS THAN THE USER SELECTED TIME.
- YELLOW STEADY - AC WAS OFF LESS THAN USER TIME SELECTED, BUT HAS SINCE BEEN RESTORED.

BATTERY (T2)
- RED FLASHING - ONE OF THE BATTERY BANKS IS IN ALARM FOR MORE THAN 5 SECONDS.
- RED STEADY - ONE OF THE BATTERY BANKS IS IN ALARM FOR MORE THAN 5 SECONDS BUT HAS SINCE BEEN RESTORED.
- YELLOW FLASHING - ONE OF THE BATTERY BANKS IS IN ALARM FOR LESS THAN 5 SECONDS.
- YELLOW STEADY - ONE OF THE BATTERY BANKS IS IN ALARM FOR LESS THAN 5 SECONDS BUT HAS SINCE BEEN RESTORED.

LOD (T3)
- RED FLASHING - ONE OR MORE BULBS WAS OUT DURING A TRAIN MOVE, OR ONE OR MORE ILOD's ARE OFFLINE.
- RED STEADY - ONE OF THE ABOVE CONDITIONS HAD OCCURRED, BUT HAS SINCE RECOVERED.
- YELLOW STEADY - THE FLASH RATE WAS IN ALARM, BUT HAS SINCE CLEARED.
- YELLOW FLASHING - THE FLASH RATE WAS NOT NORMAL FOR LAST TRAIN MOVE.

WARN TIME (T4)
- RED FLASHING - LAST TRAIN MOVE HAD A WARNING TIME LESS THAN MIN WARN TIME ENTERED DURING SITE SETUP, DEFAULT IS 20 SECONDS.
- RED STEADY - WARNING TIME ALARM HAD BEEN SET, BUT LAST TRAIN MOVE HAD A NORMAL WARNING TIME.
- YELLOW FLASHING - LAST TRAIN HAD A WARNING TIME LESS THAN DESIRED WARN TIME BUT MORE THAN MIN WARN TIME.
- YELLOW STEADY - WARNING TIME MONITOR HAD BEEN SET, BUT LAST TRAIN MOVE HAD A NORMAL WARNING TIME.

CROSSING ACTIVE TOO LONG (T5)
- RED FLASHING - CROSSING IS ACTIVE AND HAS BEEN FOR MORE THAN THE USER SETTING, DEFAULT IS 20 MINUTES.
- RED STEADY - CROSSING WAS ACTIVE FOR MORE THAN THE USER SETTING, DEFAULT IS 20 MINUTES, AND HAS SINCE RECOVERED.

GATE REMAINS DOWN (T6)
- RED FLASHING - GCK IS UP, BUT ONE OF THE GATES HAS BEEN DOWN FOR 20+ MINUTES.
- RED STEADY - ALARM WAS TRIGGERED, BUT THE GATE(S) HAVE SINCE RECOVERED.

GATE NOT DOWN (T7)
- RED FLASHING - ONE OR MORE GATES, TOOK LONGER THAN THE USER DEFINED SETTING TO LOWER AFTER GCK WENT DOWN.
- RED STEADY - ALARM WAS TRIGGERED, BUT THE LAST GATE MOVE WAS OK.

GATE NOT RECOVERD (T8)
- RED FLASHING - GATE OFF HAS BEEN DETECTED.
- YELLOW FLASHING - ONE OR MORE GATES, TOOK LONGER THAN 20 SECONDS TO RAISE AFTER GCK WENT UP.
- YELLOW STEADY - ALARM WAS TRIGGERED, BUT GATES HAS SINCE RECOVERED TO PICK GPK.

SSCC FAIL (I16)
- RED STEADY - MAINTK INPUT IS LOW.
- OFF - SSCC OK.

(NOTES CONT'D)

7) ALL LED'S GREEN UPON START OF THE APPLICATION PROGRAM. ALL ALARM LED's CAN BE RESET TO THEIR CURRENT STATE BY PRESSING THE "CLEAR ALARM" KEY. IF AN ALARM CONDITION IS STILL VALID, THE LED WIL CONTINUE TO FLASH. ALL STEADY-COLORED LED's WILL BE RESET TO GREEN STEADY. ANY LED's NOT LIT ARE DEFECTIVE OR A PROBLEM EXISTS WITH THE APPLICATION PROGRAM.

8) ASSIGNED DTMF CODES:

ACTIVATE CROSSING (TRACK 1)	XXXXX11#
DE-ACTIVATE CROSSING (TRACK 1)	XXXXX10#
ACTIVATE CROSSING (TRACK 2)	XXXXX21#
DE-ACTIVATE CROSSING (TRACK 2)	XXXXX20#
ACTIVATE CROSSING (MAINTENANCE)	XXXXX31#
DE-ACTIVATE CROSSING (MAINTENANCE)	XXXXX30#

NOTES:
1) DEPENDING ON DESIGN OF THE CIRCUIT.
2) THESE INPUTS ARE AUTOMATICALLY DETECTED.
3) GDK1, 2, 3 & 4 INPUT TAGS WILL BE ASSIGNED BY EXISTING MENU QUESTIONS. IF NOT ASSIGNED, THESE INPUTS WILL BE OPEN FOR USE BY OTHER TAGS, WHICH CAN BE ASSIGNED FROM THE DIGITAL CONFIGURATION MENU ON THE SEARII.
4) LED's 01-16 ALL OFF IN NORMAL LOGIC STATE (NO TRAIN). ALL LED'S WILL BE OFF, UNLESS THE CIRCUIT REPRESENTED IS IN THE ACTIVE STATE. (I.e. IF 1GCK IS LOW, GATES WILL DROP, LED2 WILL BE ON, THEN WHEN 1GDK, 2GDK ARE IN THE DOWN STATE, LED's 3 &4 WILL BE LIT.)
5) IF THE ANSWER IS NO, THE TROUBLE LIGHT OUTPUT IS EITHER ON (NORMAL STATE) OR OFF (ALARM STATE). IF THE ANSWER IS YES, THE TROUBLE LIGHT OUTPUT IS EITHER ON (NORMAL STATE) OR FLASHING (ALARM STATE).
6) DTMF2 OUTPUT CAN BE ASSIGNED TO A RELAY OUTPUT ON AN EXTERNAL I/O MODULE, CONNECTED VIA ECHELON TO THE SEARII.

IRC 23 FEB 2012

PROPOSED
DESIGN NO. 12-0019
RED-IN YELLOW-OUT

AS INSTALLED
DATE _____
BY _____
(PRINT NAME)

PROPOSED D	M	Y	REVISIONS	D	C	COMPLETED D	M	Y	C

REGION SOUTHERN
SUB. LEITHTON 332
CN

SIGNALS AND COMMUNICATIONS HOMEWOOD
23 FEBRUARY 2012
DES. PWW
CH. BJW

SEARII
PROGRAM DATA
LAKE ZURICH, IL
GILMER RD.

LEI-056.89-12

DOT# 260 500N

INVENSYS RAIL CORPORATION
LOUISVILLE DIVISION, LOUISVILLE, KY

INVENSYS RAIL CORPORATION

DES.: PWW	DATE: 23/02/12	JOB NO.: WCNA10164	
CKD.: BJW	ISSUE DATE: N/A	EST. NO.: JXXE03033	
DRN.: PWW	PLAN NO.: N/A	SHEET 12 OF 19	
P TIME: 12:49	P DATE: 16-MAY-2012	CAD ID.: LEI-056.89-12	

lei-056.89-12.dgn
16-MAY-2012

PDF COPY

REVISIONS				
NO.	DATE	BY	DESCRIPTION	APP. BY
1				
2				
3				
4				
5				

lei-056, 89-13, dgn
16-MAY-2012

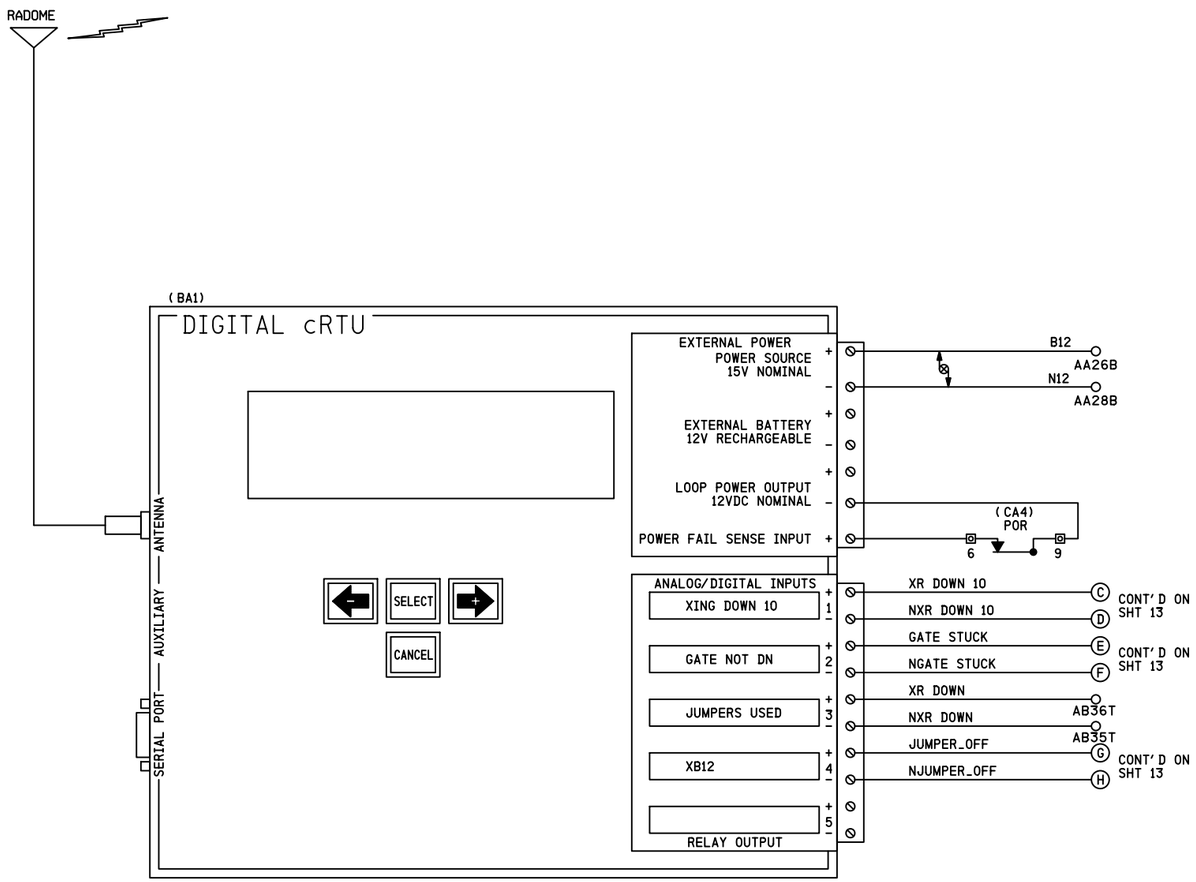

CONFIGKEY:	30
MODEL:	C06C/2ANA V2.3
SERIAL #:	
SITE IDENTIFIER:	DOT# 260 500N

* FIELD TO PROVIDE SERIAL *

	LOW ALARM	RETURN	HIGH ALARM	RETURN
B12	11.6	12.6	15.6	14.6
XB12	13.8	14.8	17.8	16.8

NOTES
1) ALL WIRING #16 AWG UNLESS OTHERWISE NOTED

⊗ DENOTES TWISTED PAIR

IRC 23 FEB 2012

PROPOSED
DESIGN NO. 12-0019
RED-IN YELLOW-OUT

AS INSTALLED
DATE
BY
(PRINT NAME)

PROPOSED			REVISIONS	D	C	COMPLETED			C
D	M	Y				D	M	Y	

REGION SOUTHERN
SUB. LEITHTON 332

SIGNALS AND COMMUNICATIONS HOMEWOOD
23 FEBRUARY 2012
DES. PWW
CH. BJW

DIGITAL CRTU
LAKE ZURICH, IL
GILMER RD.
LEI-056. 89-13

DOT# 260 500N

INVENSYS RAIL CORPORATION

DES.: PWW	DATE: 23/02/12	JOB NO.: WCNA10164	
CKD.: BJW	ISSUE DATE: N/A	EST. NO.: JXXE03033	
DRN.: PWW	PLAN NO.: N/A	SHEET 13 OF 19	
P TIME: 12:49	P DATE: 16-MAY-2012	CAD ID.: LEI-056. 89-13	

INVENSYS RAIL CORP.
LOUISVILLE DIVISION, LOUISVILLE, KY

PDF COPY

REVISIONS				
NO.	DATE	BY	DESCRIPTION	APP. BY
1				
2				
3				
4				
5				

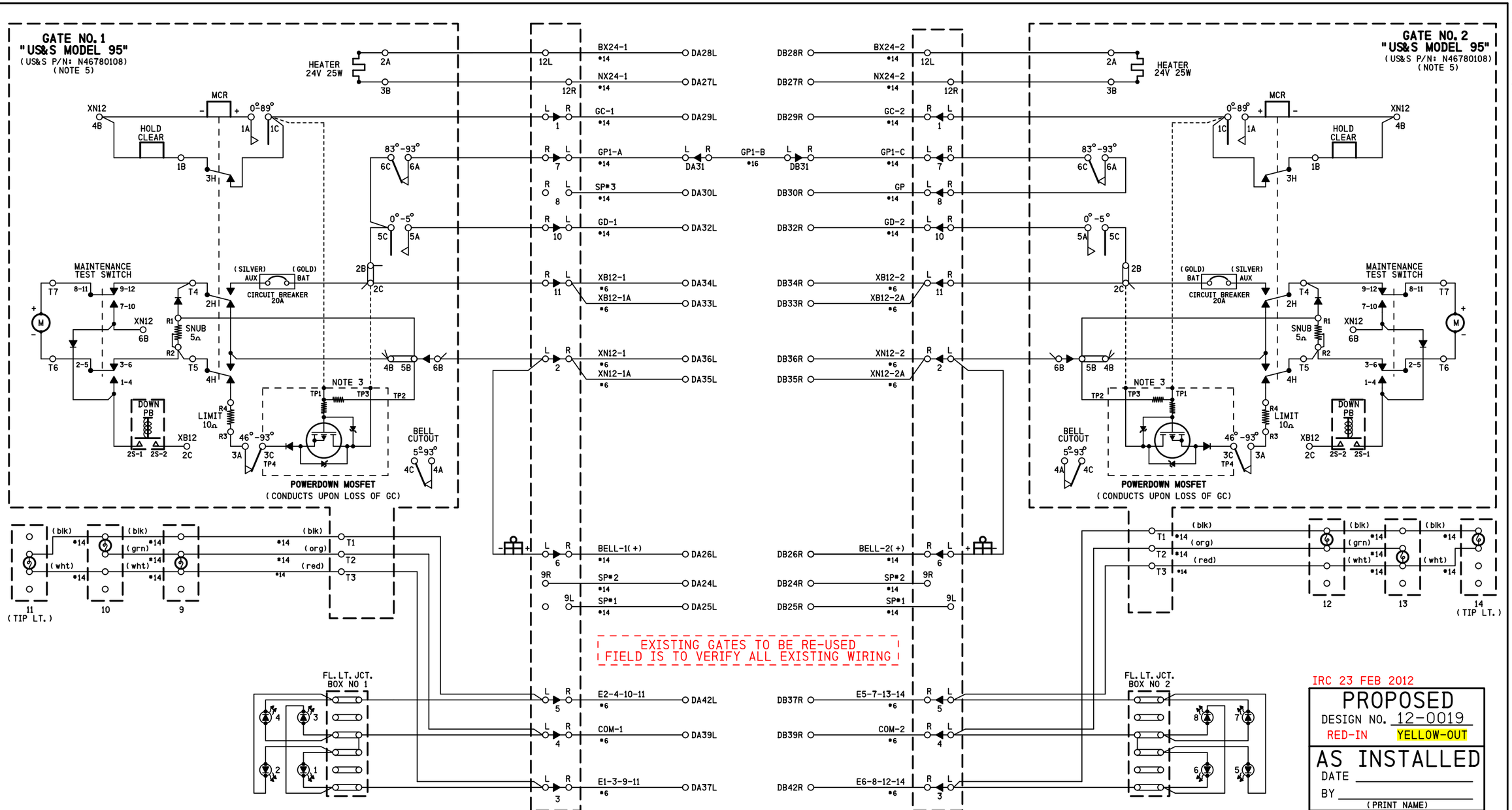

lei-056, 89-14, dgn
16-MAY-2012

IRC 23 FEB 2012

PROPOSED
DESIGN NO. 12-0019
RED-IN YELLOW-OUT

AS INSTALLED
DATE
BY
(PRINT NAME)

NOTES:

1) ON GATE No. 1 ADD STRAP BETWEEN TERMINAL 2B & 2C ADD JUMPER BETWEEN TERMINAL 2B & 5C AND BETWEEN TERMINAL 5C & 6C
2) ON GATE No. 2 ADD STRAP BETWEEN TERMINAL 2B & 2C ADD JUMPER BETWEEN TERMINAL 2B & 5C AND CONNECT GP AS SHOWN
3) POWERDOWN PCB TERMINALS TP1, TP3 & TP4 FIT OVER TERMINALS 1C, 2C & 3C RESPECTIVELY
4) ALL WIRING #10 AWG MINIMUM UNLESS OTHERWISE NOTED. WIRE SIZES SHOWN ARE MINIMUM GAUGE.
5) GATE DESCENT TIME (RELEASE FROM VERTICAL TO FULLY HORIZONTAL) TO BE WITHIN 11 SECONDS.
6) ENSURE ALL TERMINALS HAVE TWO SHOULDER NUTS.

PROPOSED			REVISIONS	D	C	COMPLETED			C
D	M	Y				D	M	Y	

REGION SOUTHERN
SUB. LEITHTON 332

SIGNALS AND COMMUNICATIONS HOMEWOOD
23 FEBRUARY 2012
DES. PWW
CH. BJW

GATE 1 & 2 MECH. CONTROL CIRCUITS
US&S MODEL 95
LAKE ZURICH, IL
GILMER RD.

LEI-056. 89-14

DOT# 260 500N

INVENSYS RAIL CORPORATION

DES. : PWW	DATE: 23/02/12	JOB NO. : WCNA10164	
CKD. : BJW	ISSUE DATE: N/A	EST. NO. : JXXE03033	
DRN. : PWW	PLAN NO. : N/A	SHEET 14 OF 19	
P TIME: 12:49	P DATE: 16-MAY-2012	CAD ID. : LEI-056. 89-14	

INVENSYS RAIL CORP.
LOUISVILLE DIVISION, LOUISVILLE, KY

PDF COPY

REVISIONS				
NO.	DATE	BY	DESCRIPTION	APP. BY
1				
2				
3				
4				
5				

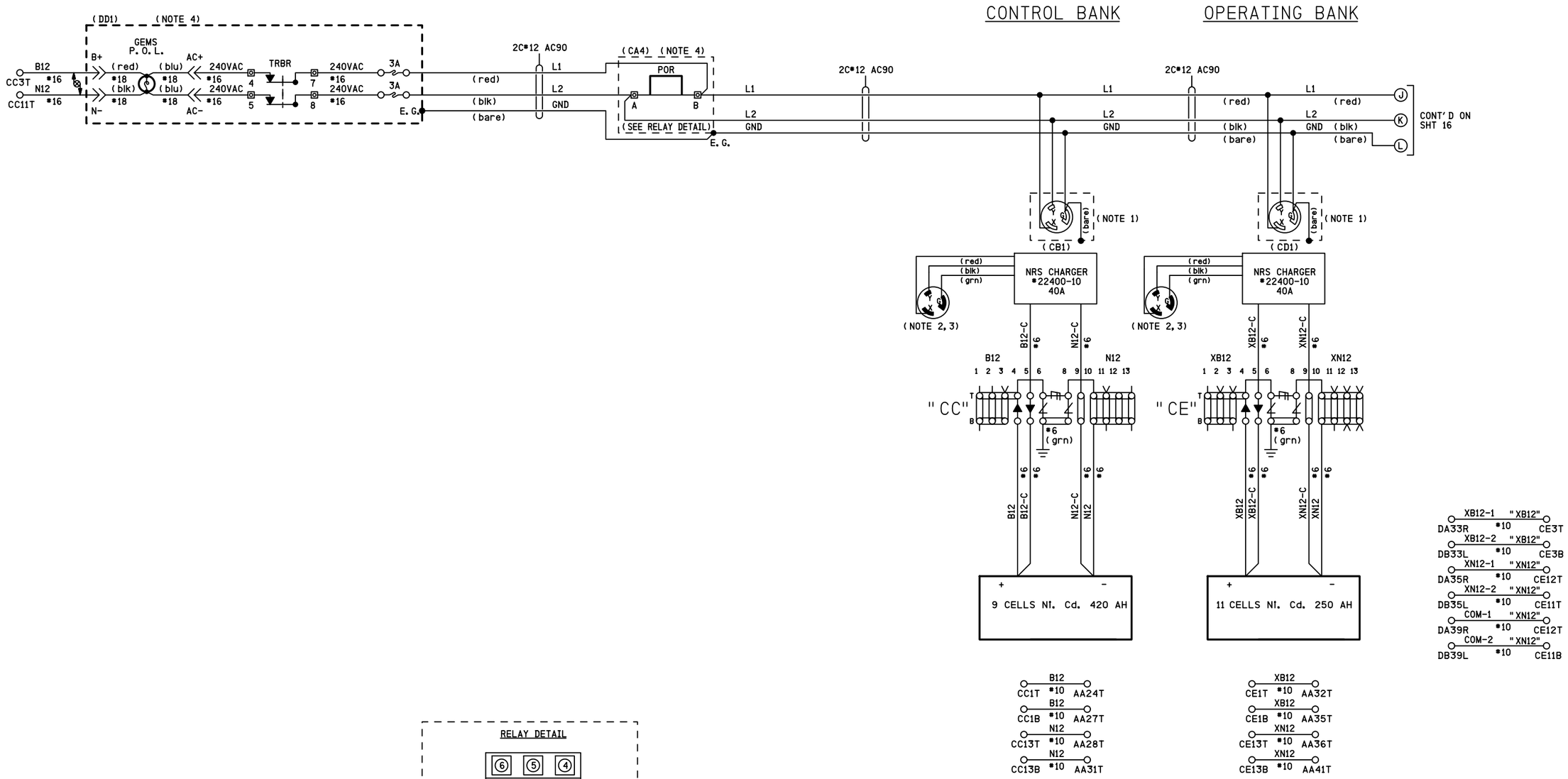

lei-056, 89-15.dgn
16-MAY-2012

NOTES

1) 20A 250V TEST LOCK RECEPTACLE HUBBELL HBL 2320
2) PLUG HUBBELL HBL 2321 REFER TO PS-902 PAGE 6
3) GROUND LUG LOCATED ON CHARGER HOUSING
4) PART OF POWER OFF INDICATOR LIGHT REPEATER RELAY JUNCTION BOX (REFER TO PS-907 SHT 2A)

<< DENOTES WAGO TERMINAL

DENOTES TWISTED PAIR

RELAY DETAIL

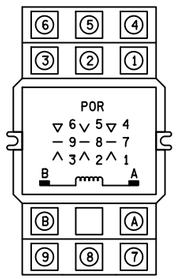

RELAY - POTTER & BRUMFIELD
MODEL KUP-14A15-240 SOCKET MOUNTABLE
240 VAC W/ 3 FORM C CONTACTS

SOCKET - SCREW TERMINAL
MODEL 27E121

IRC 23 FEB 2012

PROPOSED
DESIGN NO. 12-0019
RED-IN YELLOW-OUT

AS INSTALLED
DATE _____
BY _____
(PRINT NAME)

PROPOSED D	M	Y	REVISIONS	D	C	COMPLETED D	M	Y	C

REGION SOUTHERN
SUB. LEITHTON 332

SIGNALS AND COMMUNICATIONS HOMEWOOD
DES. PWW
23 FEBRUARY 2012
CH. BJW

DC DISTRIBUTION
LAKE ZURICH, IL
GILMER RD.

LEI-056. 89-15

DOT# 260 500N

INVENSYS RAIL CORPORATION

DES.: PWW	DATE: 23/02/12	JOB NO.: WCNA10164	
CKD.: BJW	ISSUE DATE: N/A	EST. NO.: JXXE03033	
DRN.: PWW	PLAN NO.: N/A	SHEET 15 OF 19	
P. TIME: 12:49	P. DATE: 16-MAY-2012	CAD ID.: LEI-056. 89-15	

INVENSYS RAIL CORP.
LOUISVILLE DIVISION, LOUISVILLE, KY

PDF COPY

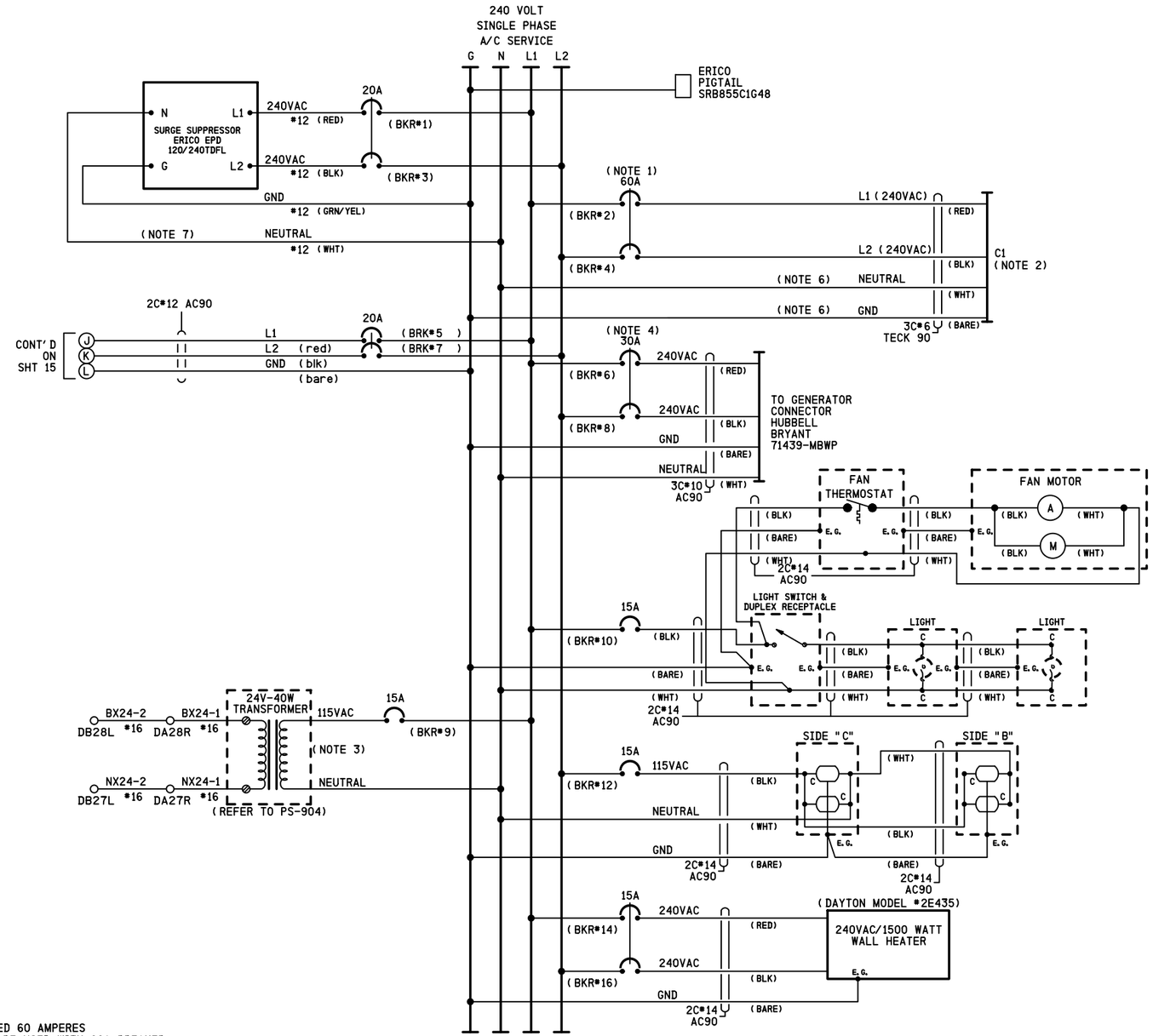

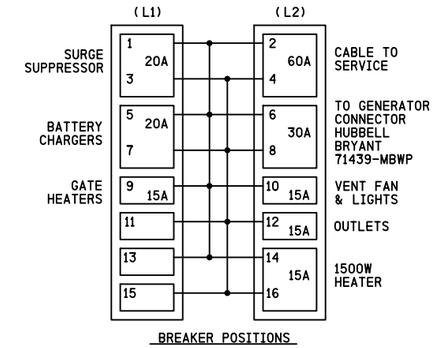

NOTES

1) CIRCUIT BREAKER NOT TO EXCEED 60 AMPERES
   RETAINING KIT PK4MB2LA MUST BE USED WITH 60A BREAKER
2) FEEDER CIRCUIT BREAKER, AT STUB POLE SERVICE
   PANEL, NOT TO EXCEED 60 AMPERES
3) 24 VOLT - 40 WATT TRANSFORMER (CN STOCK #02-45-367)
4) A SWITCH TRANSFER KIT MUST BE INSTALLED BETWEEN
   THE SERVICE DISCONNECT BREAKER AND THE GENERATOR HOOK UP
5) WHERE SEPARATE GROUND WIRE EXISTS BETWEEN THE SERVICE AND THE
   LOAD CENTER, REMOVE THE BRASS COLORED BONDING SCREW
   (REFER TO SCHEMATIC ON BOX COVER FOR EXACT LOCATION)
6) S.C.#6 STRANDED, CSA TYPE R90 (X-LINK)
7) KEEP LEADS AS SHORT AS POSSIBLE

IRC 23 FEB 2012

PROPOSED
DESIGN NO. 12-0019
RED-IN YELLOW-OUT

AS INSTALLED
DATE _____
BY _____
(PRINT NAME)

REVISIONS	PROPOSED D	PROPOSED M	PROPOSED Y	D	C	COMPLETED D	COMPLETED M	COMPLETED Y	C

REGION SOUTHERN
SUB. LEITHTON 332

SIGNALS AND COMMUNICATIONS HOMEWOOD — DES. PWW
23 FEBRUARY 2012 — CH. BJW

AC DISTRIBUTION
LAKE ZURICH, IL
GILMER RD.

LEI-056.89-16

DOT# 260 500N

REVISIONS				
NO.	DATE	BY	DESCRIPTION	APP. BY
1				
2				
3				
4				
5				

INVENSYS RAIL CORPORATION

DES.: PWW	DATE: 23/02/12	JOB NO.: WCNA10164	
CKD.: BJW	ISSUE DATE: N/A	EST. NO.: JXXE03033	
DRN.: PWW	PLAN NO.: N/A	SHEET 16 OF 19	
P. TIME: 12:49	P. DATE: 16-MAY-2012	CAD ID.: LEI-056.89-16	

lei-056.89-16.dgn
16-MAY-2012

INVENSYS RAIL CORP.
LOUISVILLE DIVISION, LOUISVILLE, KY

PDF COPY

lei-056.89-17.dgn
16-MAY-2012

REVISIONS				
NO.	DATE	BY	DESCRIPTION	APP. BY
1				
2				
3				
4				
5				

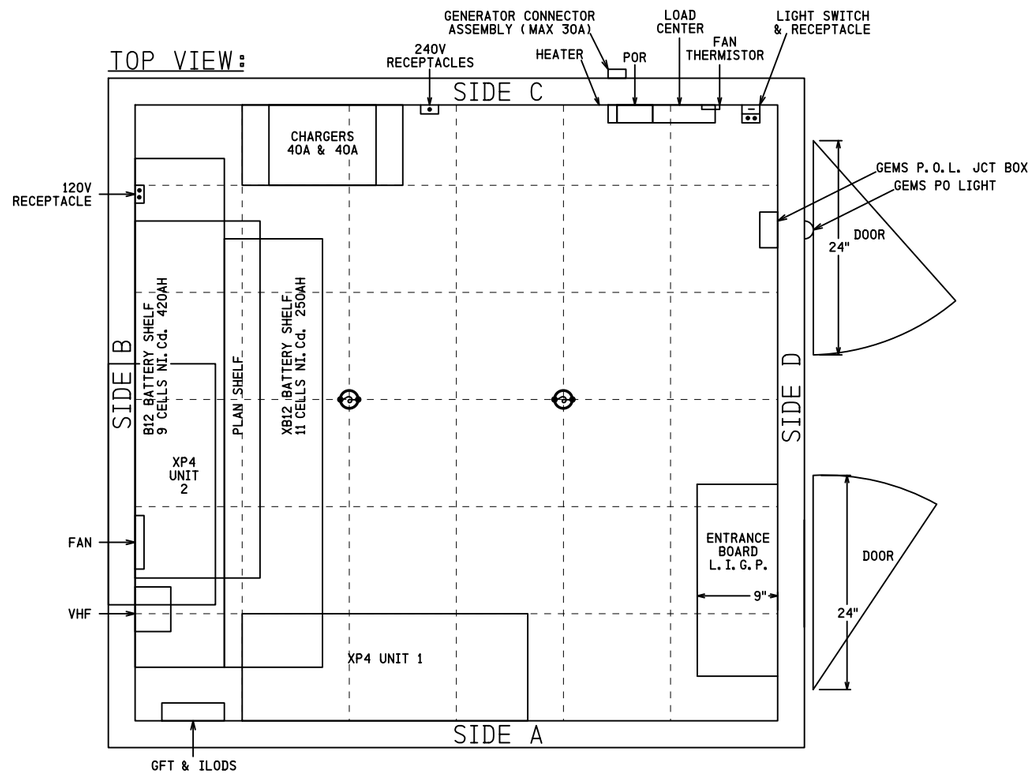

IRC 23 FEB 2012

PROPOSED
DESIGN NO. 12-0019
RED-IN YELLOW-OUT

AS INSTALLED
DATE _____
BY _____
(PRINT NAME)

PROPOSED D	M	Y	REVISIONS	D	C	COMPLETED D	M	Y	C

REGION SOUTHERN
SUB. LEITHTON 332

SIGNALS AND COMMUNICATIONS HOMEWOOD
DES. PWW
23 FEBRUARY 2012
CH. BJW
BUNGALOW LAYOUT TOP VIEW
LAKE ZURICH, IL
GILMER RD.
LEI-056.89-17

DOT# 260 500N

INVENSYS RAIL CORPORATION

DES.: PWW	DATE: 23/02/12	JOB NO.: WCNA10164	
CKD.: BJW	ISSUE DATE: N/A	EST. NO.: JXXE03033	
DRN.: PWW	PLAN NO.: N/A	SHEET 17 OF 19	
P. TIME: 12:49	P. DATE: 16-MAY-2012	CAD ID.: LEI-056.89-17	

INVENSYS RAIL CORP.
LOUISVILLE DIVISION, LOUISVILLE, KY

PDF COPY

REVISIONS				
NO.	DATE	BY	DESCRIPTION	APP. BY
1				
2				
3				
4				
5				

(DD1)

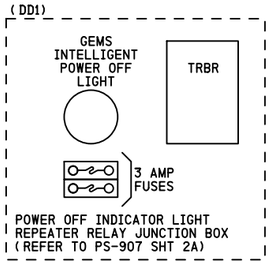

SIDE VIEW: SIDE D

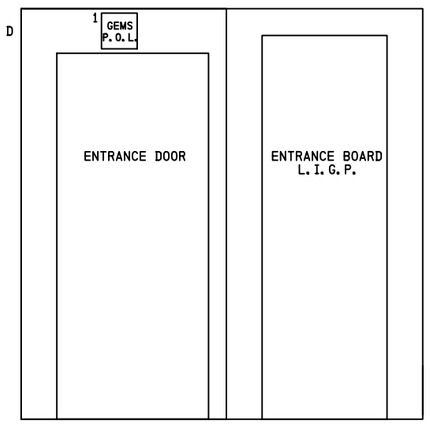

ENTRANCE BOARD L.I.G.P.

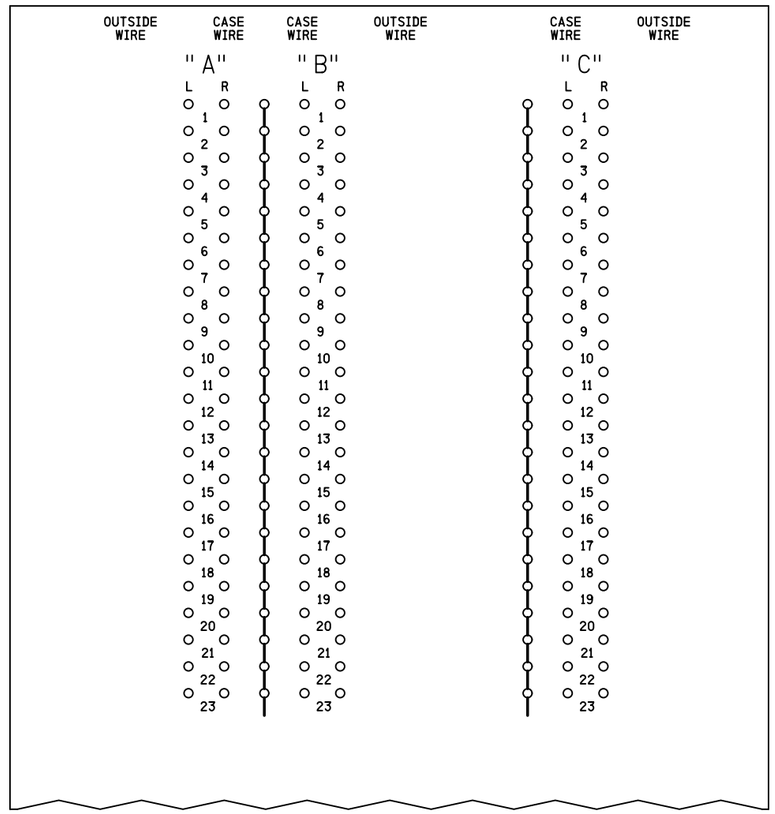

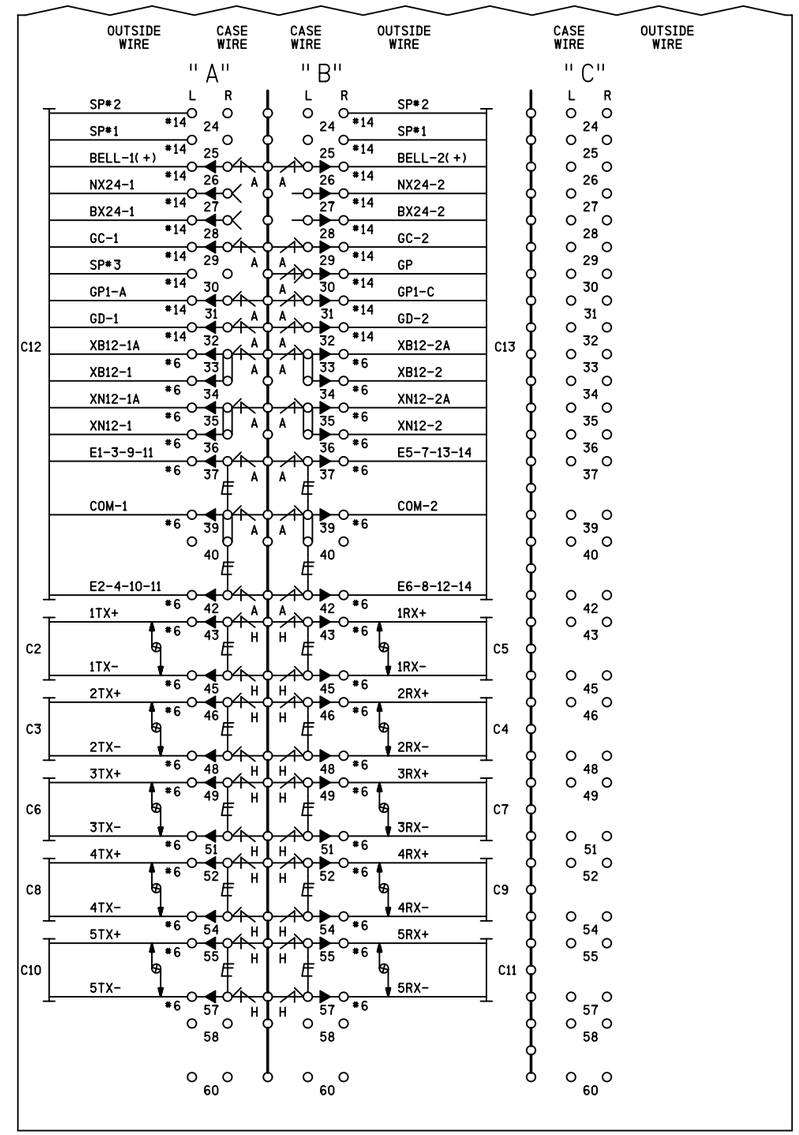

NOTES

- DENOTES HD EQUALIZER CN# 02-32-391 SAFETRAN # 022700-1X
- "A" DENOTES AIR GAP ARRESTOR CN# 02-25-168 SAFETRAN # 022485-28X
- "H" DENOTES HD AIR GAP ARRESTOR CN# 02-25-006 SAFETRAN # 022585-1X
- DENOTES GROUND PLANE
- DENOTES TWISTED PAIR

IRC 23 FEB 2012

PROPOSED
DESIGN NO. 12-0019
RED-IN YELLOW-OUT

AS INSTALLED
DATE _____
BY _____
(PRINT NAME)

PROPOSED D	M	Y	REVISIONS	D	C	COMPLETED D	M	Y	C

REGION SOUTHERN
SUB. LEITHTON 332

SIGNALS AND COMMUNICATIONS HOMEWOOD
23 FEBRUARY 2012
DES. PWW
CH. BJW

BUNGALOW LAYOUT SIDE D
& L.I.G.P.
LAKE ZURICH, IL
GILMER RD.

LEI-056.89-18

DOT# 260 500N

lei-056.89-18.dgn
16-MAY-2012

INVENSYS RAIL CORPORATION		
DES.: PWW	DATE: 23/02/12	JOB NO.: WCNA10164
CKD.: BJW	ISSUE DATE: N/A	EST. NO.: JXXE03033
DRN.: PWW	PLAN NO.: N/A	SHEET 18 OF 19
P TIME: 12:49	P DATE: 16-MAY-2012	CAD ID.: LEI-056.89-18

INVENSYS RAIL CORP.
LOUISVILLE DIVISION, LOUISVILLE, KY

PDF COPY

lei-056, 89-19, dgn
16-MAY-2012

REVISIONS				
NO.	DATE	BY	DESCRIPTION	APP. BY
1				
2				
3				
4				
5				

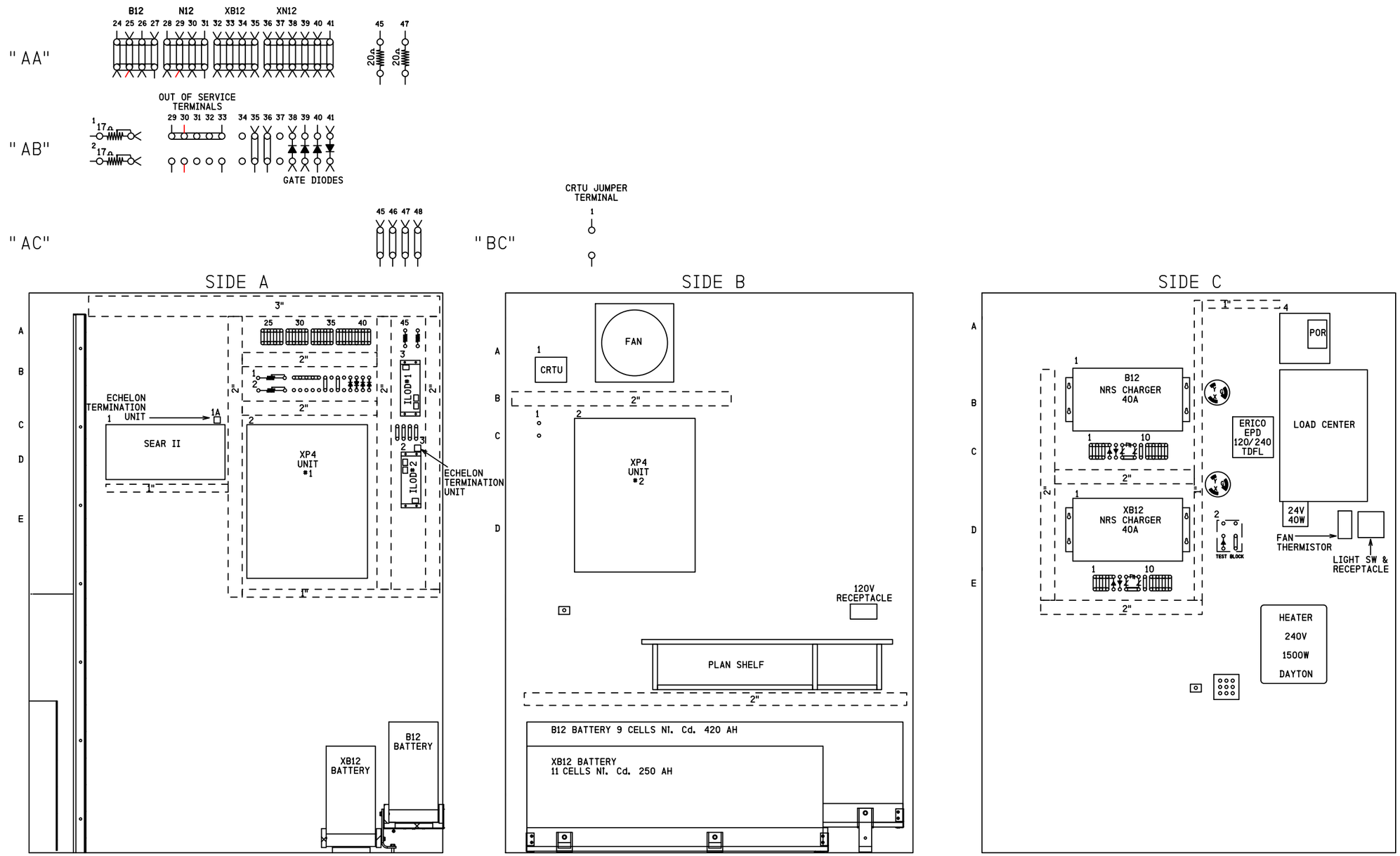

NOTES

1) SURGE PROTECTION SHOULD BE BONDED TO BUNGALOW

[ ] REPRESENTS PANDUIT

DENOTES RECTIFIER (SAFETRAN #8008A299006)

DENOTES HD EQUALIZER CN# 02-32-391
SAFETRAN # 022700-1X

"A" DENOTES AIR GAP ARRESTOR CN# 02-25-168
SAFETRAN # 022485-28X

IRC 23 FEB 2012

PROPOSED
DESIGN NO. 12-0019
RED-IN YELLOW-OUT

AS INSTALLED
DATE _____
BY _____
(PRINT NAME)

PROPOSED D	M	Y	REVISIONS	D	C	COMPLETED D	M	Y	C
16	05	12	OUT OF SERVICE REVISED	NAD	BJW				

REGION SOUTHERN
SUB. LEITHTON 332

SIGNALS AND COMMUNICATIONS HOMEWOOD
23 FEBRUARY 2012
DES. PWW
CH. BJW

BUNGALOW LAYOUT SIDES A, B & C

LAKE ZURICH, IL
GILMER RD.

LEI-056, 89-19

DOT# 260 500N

20

INVENSYS RAIL CORPORATION

DES.: PWW	DATE: 23/02/12	JOB NO.: WCNA10164	
CKD.: BJW	ISSUE DATE: N/A	EST. NO.: JXXE03033	
DRN.: PWW	PLAN NO.: N/A	SHEET 19 OF 19	
P TIME: 12:49	P DATE: 16-MAY-2012	CAD ID.: LEI-056, 89-19	

INVENSYS RAIL CORP.
LOUISVILLE DIVISION, LOUISVILLE, KY