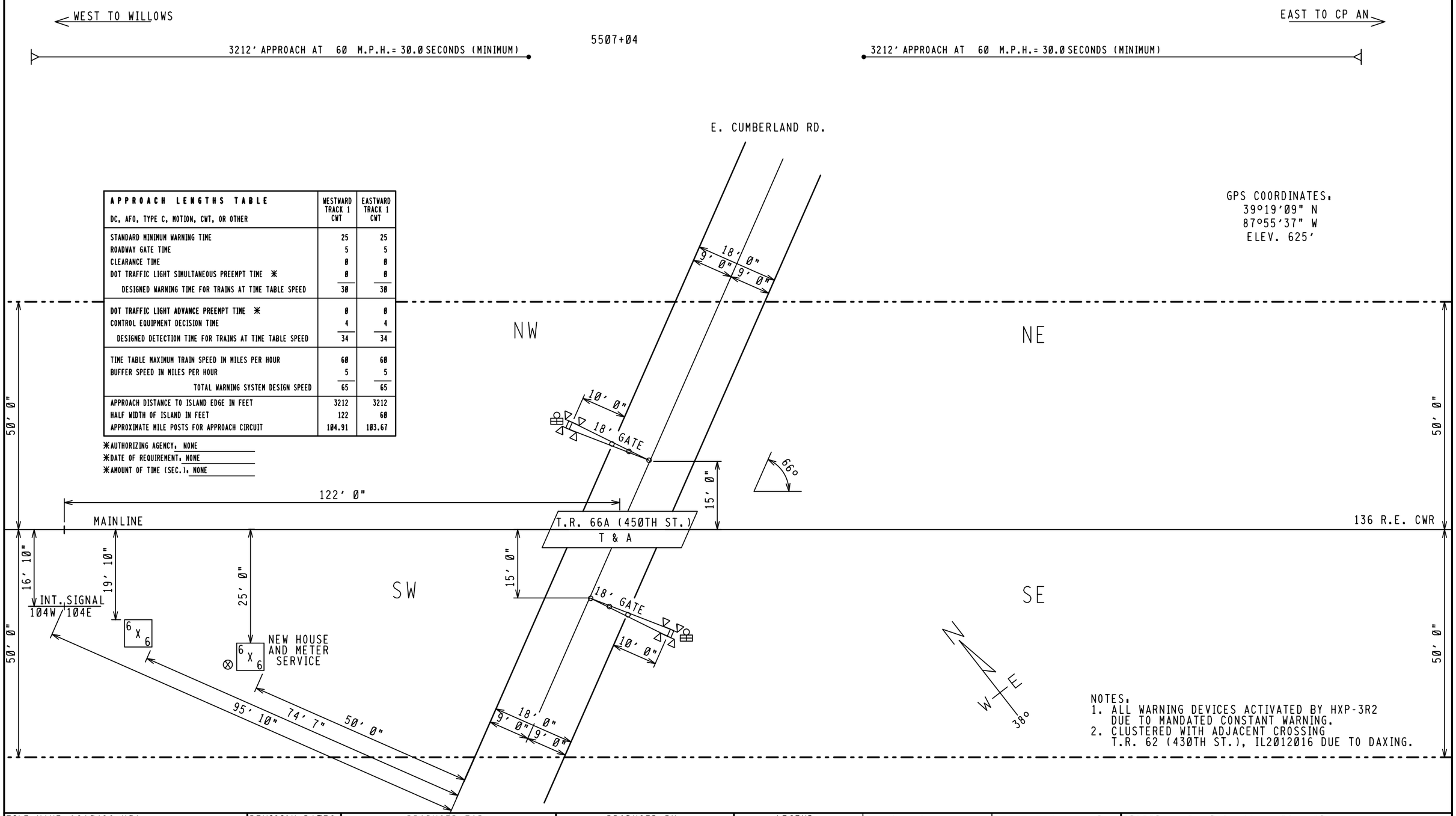

APPROACH LENGTHS TABLE DC, AFO, TYPE C, MOTION, CWT, OR OTHER	WESTWARD TRACK 1 CWT	EASTWARD TRACK 1 CWT
STANDARD MINIMUM WARNING TIME	25	25
ROADWAY GATE TIME	5	5
CLEARANCE TIME	0	0
DOT TRAFFIC LIGHT SIMULTANEOUS PREEMPT TIME ✳	0	0
DESIGNED WARNING TIME FOR TRAINS AT TIME TABLE SPEED	30	30
DOT TRAFFIC LIGHT ADVANCE PREEMPT TIME ✳	0	0
CONTROL EQUIPMENT DECISION TIME	4	4
DESIGNED DETECTION TIME FOR TRAINS AT TIME TABLE SPEED	34	34
TIME TABLE MAXIMUM TRAIN SPEED IN MILES PER HOUR	60	60
BUFFER SPEED IN MILES PER HOUR	5	5
TOTAL WARNING SYSTEM DESIGN SPEED	65	65
APPROACH DISTANCE TO ISLAND EDGE IN FEET	3212	3212
HALF WIDTH OF ISLAND IN FEET	122	60
APPROXIMATE MILE POSTS FOR APPROACH CIRCUIT	104.91	103.67

✳AUTHORIZING AGENCY: NONE
✳DATE OF REQUIREMENT: NONE
✳AMOUNT OF TIME (SEC.): NONE

FILE NAME: QS10429.H01	REVISION DATES	PRODUCED FOR:	PRODUCED BY:	LEGEND	GUARD RAIL	METER SERVICE Ⓢ	STREET NAME: T.R. 66A (450th ST.)
DATE DRAWN: 04/17/2012	05-03-12 SWS	CSX TRANSPORTATION	invensys Rail	CSX ROW	O.H. POWER	POLE Ⓟ	CITY & STATE: CASEY, IL
DRAWN BY: LEWIS, CLINT	- -	RAIL TRANSPORT GROUP ENGINEERING	7775 BAYMEADOWS WAY	R/R POLELINE	FENCE	FIRE PLUG Ⓕ	PROJECT #: IL2012015
CHECKED BY: PROSPERO, ERNESTO	- -	COMMUNICATIONS AND SIGNALS	SUITE 250	GAS	WATER	SEWER CAP Ⓢ	OP #: IL0364
SSC #: JXXD02809	- -		JACKSONVILLE, FL 32256	FIBER OPTIC	SEWER	GAS VENT Ⓥ	DOT #: 546356T

PROPOSED CROSSING LAYOUT
1"=20'

INDEX

CONTENTS

SH. NO.	CONTENTS	REVISION NO. 1	2	3	4	5	6	7	8	9
I01	INDEX AND REVISIONS	⧄								
S01	TRACK AND SIGNAL PLAN	⧄								
E01	POWER DISTRIBUTION	⧄								
E02	POWER DISTRIBUTION	⧄								
C01	SIGNAL AND TRACK CIRCUITS	⧄								
C02	CROSSING DETECTION CIRCUITRY	⧄								
C03	DETECTION DEVICE PROGRAM	⧄								
C04	CROSSING WARNING DEVICE GATE CIRCUITRY	⧄								
C05	CROSSING WARNING DEVICE LIGHT CIRCUITRY	⧄								
C06	RECORDER AND DTMF CONTROLLER CIRCUITS	⧄								
C07	RECORDER PROGRAM	⧄								
C08	RELAY RACK DETAIL HOUSE ARRANGEMENT	⧄								
C09	SHELF ARRANGEMENT	⧄								
C10	TERMINAL BOARD ARRANGEMENT	⧄								

⧄ = DESIGN COMPLETED

☒ = REVISION COMPLETED

REVISIONS

REV. NO.	PROJECT NO.	DESIGN DATE	IN SERVICE DATE	REVISION DATE
1	IL2012016	05-02-12		

TO BE COMPLETED ON A.I.S.

NEW WORK

invensys Rail

PROJ #: IL2012015
PROJ #: IL2012016
DES BY: S. SPENCE
CHK BY: D. ALBRIGHT
DATE: 05-02-12

= NOTE

PMD3RCPML.I01
REV. 09-30-10

CSX TRANSPORTATION
RAIL TRANSPORT GROUP ENGINEERING
COMMUNICATIONS AND SIGNALS

SIGNALS 104W & 104E

T.R. 66A (45OTH ST.) 546356T
INDEX AND REVISIONS
CASEY, IL M.P. QS-104.29

DESIGNED	DIGITIZED	CHECKED	DATE
IRC/SWS	IRC/SWS	IRC/DBA	05-02-12

DESIGN DATE	REV. NO.	DRAWING	SHEET NO	FILE	SHEET
05-02-12	1	-----	-----	QS10429	I01

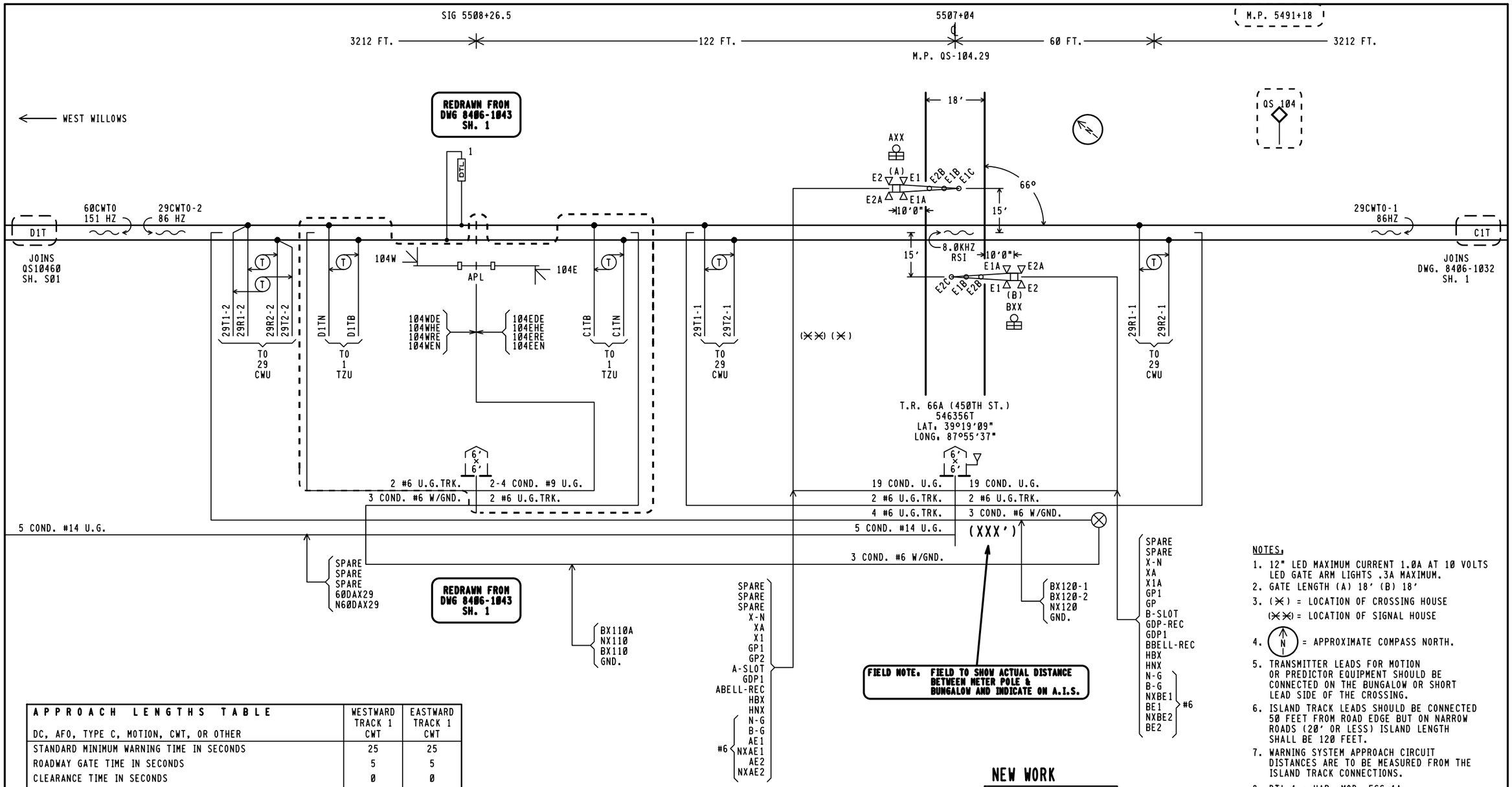

APPROACH LENGTHS TABLE DC, AFO, TYPE C, MOTION, CWT, OR OTHER	WESTWARD TRACK 1 CWT	EASTWARD TRACK 1 CWT
STANDARD MINIMUM WARNING TIME IN SECONDS	25	25
ROADWAY GATE TIME IN SECONDS	5	5
CLEARANCE TIME IN SECONDS	0	0
DOT TRAFFIC LIGHT SIMULTANEOUS PREEMPT TIME IN SECONDS✳	0	0
DESIGNED WARNING TIME FOR TRAINS AT TIME TABLE SPEED	30 SEC.	30 SEC.
DOT TRAFFIC LIGHT ADVANCE PREEMPT TIME IN SECONDS ✳	0	0
CONTROL EQUIPMENT DECISION TIME IN SECONDS	4	4
DESIGNED DETECTION TIME FOR TRAINS AT TIME TABLE SPEED	34 SEC.	34 SEC.
TIME TABLE MAXIMUM TRAIN SPEED IN MILES PER HOUR	60	60
BUFFER SPEED IN MILES PER HOUR	5	5
TOTAL WARNING SYSTEM DESIGN SPEED IN MILES PER HOUR	65	65
APPROACH DISTANCE TO ISLAND EDGE IN FEET	3212	3212
HALF WIDTH OF ISLAND IN FEET	122	60
APPROXIMATE MILE POSTS FOR APPROACH CIRCUIT	104.91	103.67

✳AUTHORIZING AGENCY. NONE
✳DATE OF REQUIREMENT. NONE
✳AMOUNT OF TIME (SEC.). NONE

NOTES:

1. 12" LED MAXIMUM CURRENT 1.0A AT 10 VOLTS LED GATE ARM LIGHTS .3A MAXIMUM.
2. GATE LENGTH (A) 18' (B) 18'
3. (✳) = LOCATION OF CROSSING HOUSE
   (✳✳) = LOCATION OF SIGNAL HOUSE
4. (N) = APPROXIMATE COMPASS NORTH.
5. TRANSMITTER LEADS FOR MOTION OR PREDICTOR EQUIPMENT SHOULD BE CONNECTED ON THE BUNGALOW OR SHORT LEAD SIDE OF THE CROSSING.
6. ISLAND TRACK LEADS SHOULD BE CONNECTED 50 FEET FROM ROAD EDGE BUT ON NARROW ROADS (20' OR LESS) ISLAND LENGTH SHALL BE 120 FEET.
7. WARNING SYSTEM APPROACH CIRCUIT DISTANCES ARE TO BE MEASURED FROM THE ISLAND TRACK CONNECTIONS.
8. DTL-1 = HAR. MOD. FSS-1A PN250849-000 W/ 8V617-2000'

NEW WORK

invensys Rail

PROJ #. IL2012015
PROJ #. IL2012016
DES BY. S. SPENCE
CHK BY. D. ALBRIGHT
DATE.05-02-12

= NOTE
= EXISTING

PMD3RCPML.S01
REV. 09-30-10

CSX TRANSPORTATION
RAIL TRANSPORT GROUP ENGINEERING
COMMUNICATIONS AND SIGNALS

SIGNALS 104W & 1404E

T.R. 66A (45TH ST.) 546356T
TRACK AND SIGNAL PLAN
CASEY, IL M.P. QS-104.29

DESIGNED	DIGITIZED	CHECKED	DATE
IRC/SWS	IRC/SWS	IRC/DBA	05-02-12

DESIGN DATE	REV. NO.	DRAWING	SHEET NO	FILE	SHEET
05-02-12	1	-----	-----	QS10429	S01

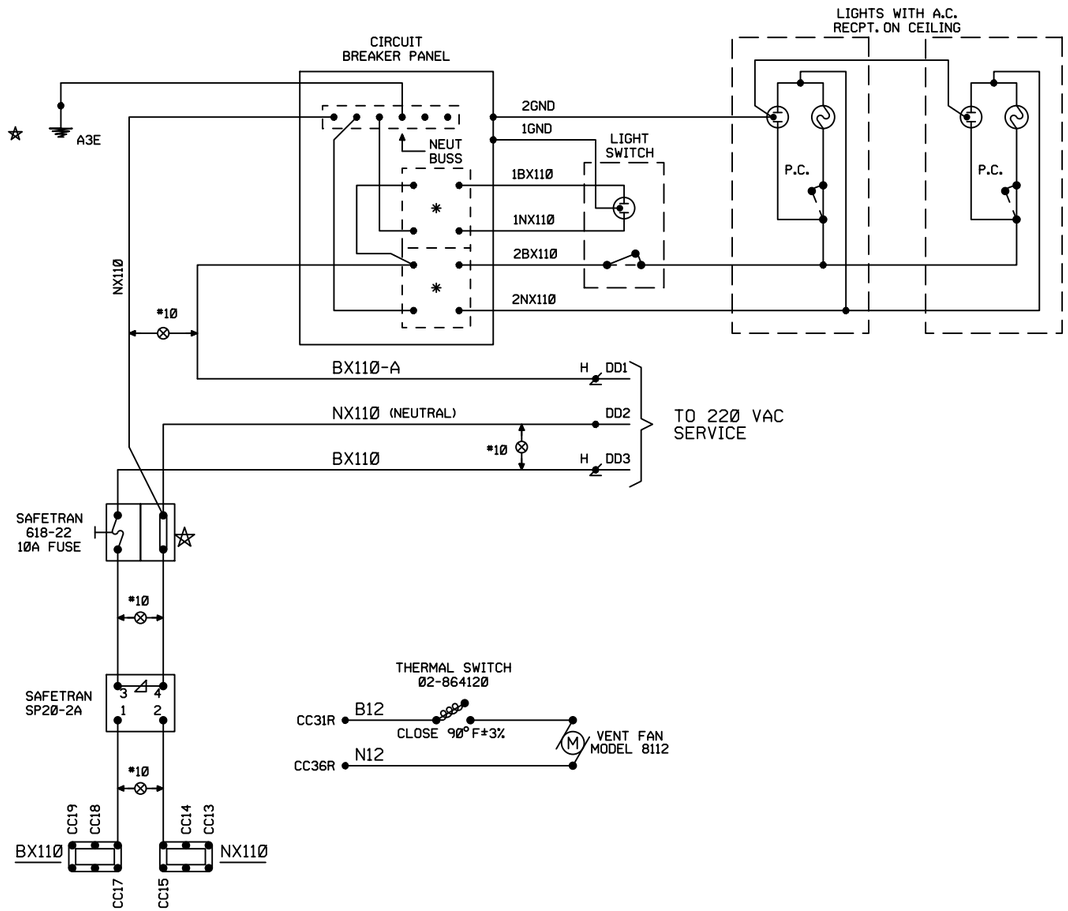

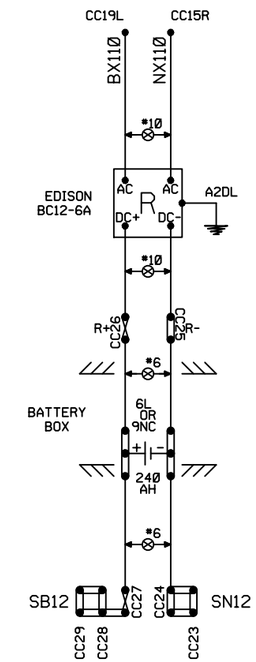

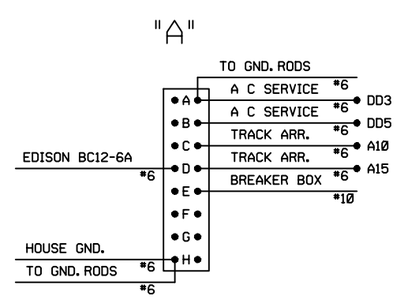

PRIME GND. GRID

NOTES.

ALL CASE WIRING #16 EXCEPT AS SHOWN.

⊗ = TWISTED PAIR.

✪ = WHEN UNGROUNDED POWER IS USED REPLACE LINKS WITH FUSE OR ARRESTER EQUIVALENT TO BX110 SIDE OF CIRCUIT.

✱ -20A GROUND FAULT CIRCUIT BREAKER

REDRAWN FROM DWG. 8406-1043 SH. 3

NEW SHEET

invensys Rail

PROJ #. IL2012015
PROJ #. IL2012016
DES BY. K. PAXTON
CHK BY. D. ALBRIGHT
DATE. 05-02-12

= NOTE

( ) = EXISTING

BLANK(14X22).SC
REV. 01-31-05

6' X 6' SIGNAL RELAY HOUSE

CSX TRANSPORTATION

RAIL TRANSPORT GROUP ENGINEERING
COMMUNICATIONS AND SIGNALS

SIGNALS 104W & 104E

POWER DISTRIBUTION
CASEY, IL M.P. QS-104.29

DESIGNED	DIGITIZED	CHECKED	DATE
IRC/KSP	IRC/KSP	IRC/DBA	05-02-12

DESIGN DATE	REV. NO.	DRAWING	SHEET NO	FILE	SHEET
05-02-12	1	-----	-----	QS10429	E01

TOP ROW

XR			XPR			GPR			EOR			POR		
12	FB	B8	22	F	B36	12	B	B82	12	FB	B81	12	FB	B62
15	FB	C30	25	F	C30	15	B	C30	15	FB	C30	15	FB	C30
22						22			32	FB		22	FB	
23						25			35	FB		25	FB	
25	F					32	F					32	F	
32						35	B					35		
35														

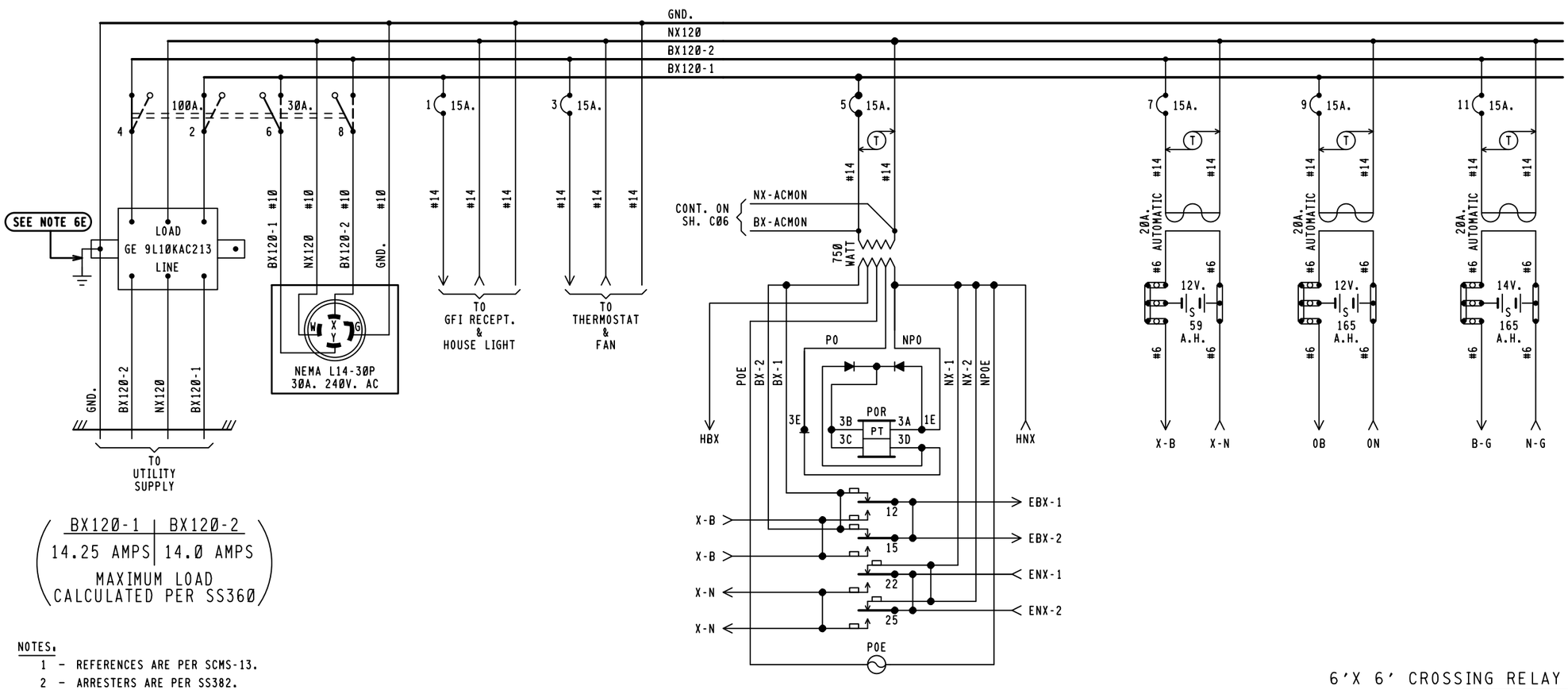

BX120-1	BX120-2
14.25 AMPS	14.0 AMPS

MAXIMUM LOAD
CALCULATED PER SS360

NOTES:

1 - REFERENCES ARE PER SCMS-13.
2 - ARRESTERS ARE PER SS382.
3 - SHELF RELAY PLACEMENT ON CONSIST CHART HAS NO SIGNIFICANCE.
4 - PLUG-IN RELAYS ARE VIEWED FROM THE FRONT OF RACK.
5 - BATTERY A.H. CAPACITY SHOWN IS THE MINIMUM REQUIREMENT.
6 - WIRING
  A - FEED TO ALL BUSSES, LIGHT CIRCUITS,MOTOR CIRCUITS TO BE #10 FLEX.
  B - 120-VOLT FEED FROM ENTRANCE TO POWER BUSS TO BE #10 FLEX.
  C - ALL TRACK WIRES TO BE #10 FLEX.
  D - ALL OTHERS TO BE #16 FLEX UNLESS NOTED.
  E - GROUND WIRE NOT NECESSARY WHEN GE ARRESTER IS MOUNTED ON GROUND PLANE OR METAL ENCLOSURE AFFIXED DIRECTLY TO BUNGALOW METALLIC STRUCTURAL MEMBER.
7 - CIRCUIT INTERRUPTERS 2 & 4 ARE MECHANICALLY INTERLOCKED WITH CIRCUIT INTERRUPTERS 6 & 8.

WILMORE DC-DC CONVERTER
MODEL 1675-12-12-15

INPUT + → OB
INPUT - → ON
OUTPUT + → B
OUTPUT - → N

NEW WORK

invensys Rail

PROJ #: IL2012015
PROJ #: IL2012016
DES BY: S. SPENCE
CHK BY: D. ALBRIGHT
DATE: 05-02-12

= NOTE

6'X 6' CROSSING RELAY HOUSE W/FARADAY SHIELD

CSX TRANSPORTATION
RAIL TRANSPORT GROUP ENGINEERING
COMMUNICATIONS AND SIGNALS

SIGNALS 104W & 104E

T.R. 66A (45TH ST.) 546356T
POWER DISTRIBUTION
CASEY, IL M.P. QS-104.29

PMD3RCPML.E01H
REV. 09-30-10

DESIGNED	DIGITIZED	CHECKED	DATE
IRC/SWS	IRC/SWS	IRC/DBA	05-02-12

DESIGN DATE	REV. NO.	DRAWING	SHEET NO	FILE	SHEET
05-02-12	1	-----	-----	QS10429	E02

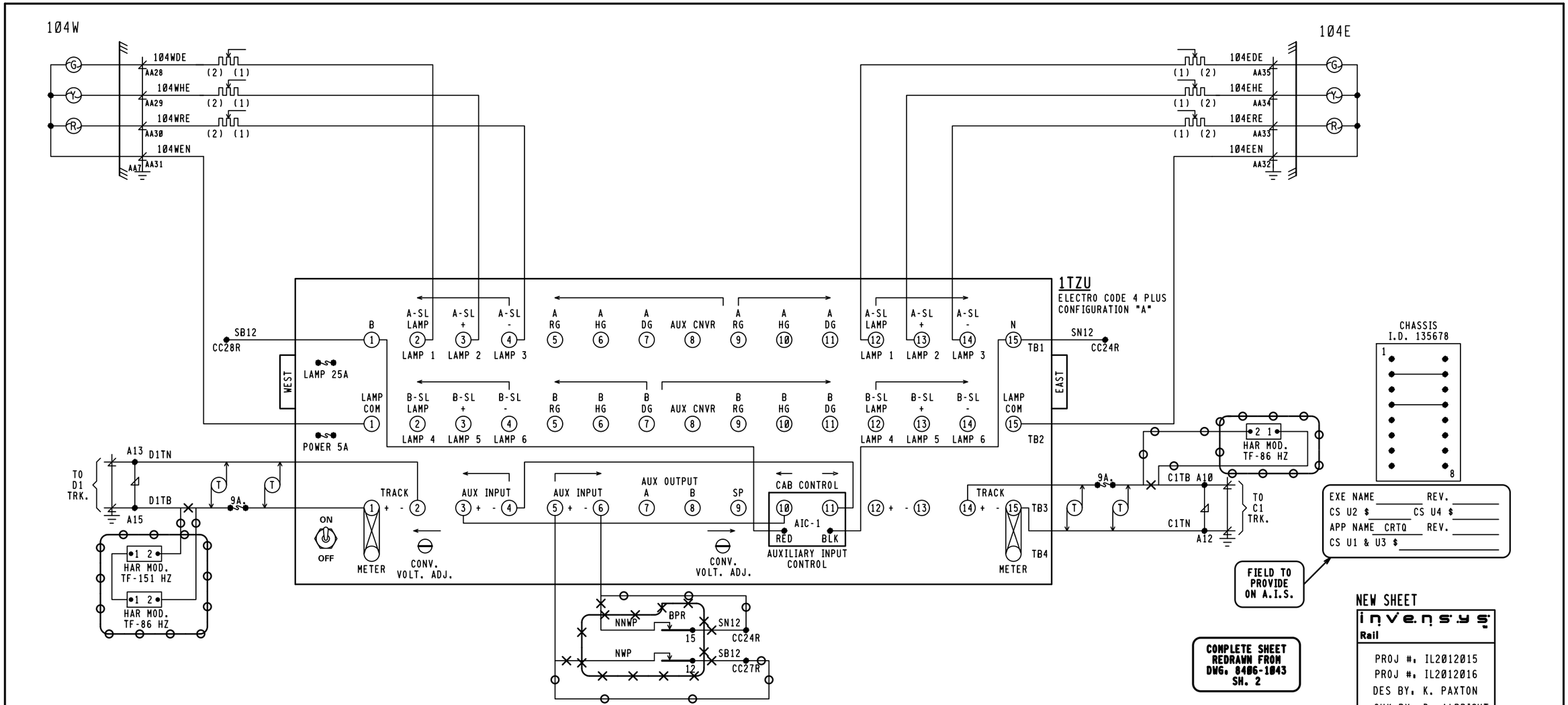

NOTE:

SIGNAL LIGHT RESISTORS ARE 3 OHM VARIABLE.

CSX TRANSPORTATION

RAIL TRANSPORT GROUP ENGINEERING
COMMUNICATIONS AND SIGNALS

SIGNALS 104W & 104E

SIGNAL AND TRACK CIRCUITS
CASEY, IL M.P. QS-104.29

BLANK(14X22).SC
REV. 01-31-05

DESIGNED	DIGITIZED	CHECKED	DATE
IRC/KSP	IRC/KSP	IRC/DBA	05-02-12

DESIGN DATE	REV. NO.	DRAWING	SHEET NO	FILE	SHEET
05-02-12	1	-----	-----	QS10429	C01

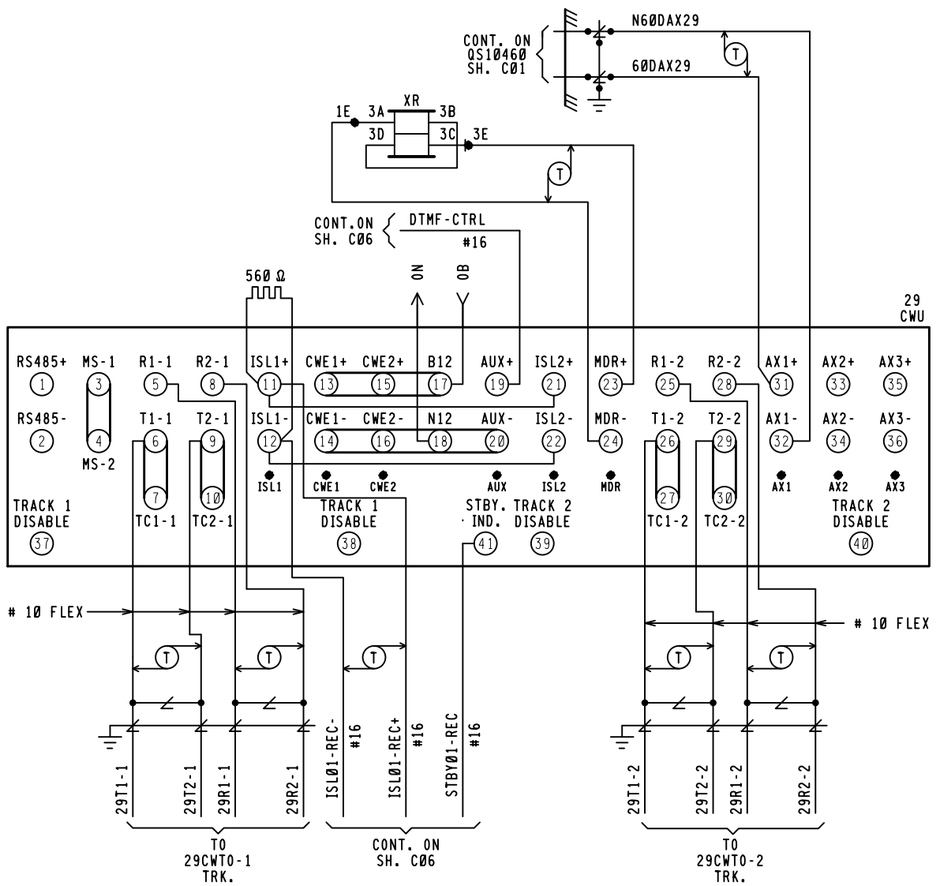

29CWU
HXP-3R2 MODULES REQUIRED

	TLM (TRANSFER LOGIC)
	TRM TRK.1 (TRANSCEIVER)
	RSI TRK.1 (ISLAND)
	RYD (RELAY DRIVE)
	TRM TRK.2 (TRANSCEIVER)
	RSI TRK.2 (ISLAND) (NOT USED)
	CPU (CENTRAL PROCESSOR UNIT)
	AXD (AUXILIARY DRIVE)
RMM (RECORDER MEMORY) (NOT USED)	
SIM (SERIAL INTERFACE)	
SIM (SERIAL INTERFACE)	
TRM TRK.1 (TRANSCEIVER)	
RSI TRK.1 (ISLAND)	
RYD (RELAY DRIVE)	
TRM TRK.2 (TRANSCEIVER)	
RSI TRK.2 (ISLAND) (NOT USED)	
CPU (CENTRAL PROCESSOR UNIT)	
AXD (AUXILIARY DRIVE)	

FRONT VIEW

STANDBY SYSTEM

CABINET SWITCHES

MASTER/SLAVE SWITCHES ARE LOCATED IN THE UPPER BAY OF CABINET

MASTER/SLAVE

MASTER SLAVE — S1 — TRACK 1

MASTER SLAVE — S2 — TRACK 2

THESE SWITCHES ARE LOCATED ON MOTHERBOARD

SYSTEM CONFIGURATION				
S5 & S6 DIP SWITCH POSITIONS				
SWITCH #	1	2	3	4
SWITCH POSITION	ON	OFF	OFF	OFF
APPROACH.	NORMAL		(NOT USED)	

	FREQUENCY SELECT					
TRACK 1	S3 & S4 DIP SWITCH POSITIONS					86HZ
	SWITCH #	1	2	3	4	5
	SWITCH POSITION	ON	OFF	OFF	OFF	OFF
TRACK 2	S7 & S8 DIP SWITCH POSITIONS					86HZ
	SWITCH #	1	2	3	4	5
	SWITCH POSITION	ON	OFF	OFF	OFF	OFF

NORMAL SYSTEM

CABINET SWITCHES

MASTER/SLAVE SWITCHES ARE LOCATED IN THE UPPER BAY OF CABINET

THESE SWITCHES ARE LOCATED ON MOTHERBOARD

SYSTEM CONFIGURATION				
S13 & S14 DIP SWITCH POSITIONS				
SWITCH #	1	2	3	4
SWITCH POSITION	ON	OFF	OFF	OFF
APPROACH.	NORMAL		(NOT USED)	

	FREQUENCY SELECT					
TRACK 1	S11 & S12 DIP SWITCH POSITIONS					86HZ
	SWITCH #	1	2	3	4	5
	SWITCH POSITION	ON	OFF	OFF	OFF	OFF
TRACK 2	S15 & S16 DIP SWITCH POSITIONS					86HZ
	SWITCH #	1	2	3	4	5
	SWITCH POSITION	ON	OFF	OFF	OFF	OFF

RSI MODULE

226736-000 8.0KHZ

ISLAND FREQ.
8.0KHZ

NORMAL RSI JUMPERS — STANDBY RSI JUMPERS

LOS 0
LOS 1
LOS 2
FAULT 0
FAULT 1

TLM MODULE JUMPERS AND SWITCHES

STANDBY ONLY — (TOGGLE MODE) — W1 — 3 2 1 (✱)

ISL 1 DISABLE — (ENABLE MODE) — W2 — 3 2 1 (✱)

ISL 2 DISABLE — (DISABLE MODE) — W3 — 3 2 1 (✱)

MINUTE TIMEOUT SWITCH

SETTING	(☆) 9 MINUTES

S2 — STANDBY / AUTO / NORMAL

NOTE.
PIN 1 IS IDENTIFIED BY ASTERICK BELOW IT.
(☆) = MAY BE SET PER FIELD CONDITIONS.

NEW WORK

invensys Rail

PROJ #. IL2012015
PROJ #. IL2012016
DES BY. S. SPENCE
CHK BY. D. ALBRIGHT
DATE. 05-02-12

CSX TRANSPORTATION

RAIL TRANSPORT GROUP ENGINEERING
COMMUNICATIONS AND SIGNALS

SIGNALS 104W & 104E

T.R. 66A (450TH ST.) 546356T
CROSSING DETECTION CIRCUITRY
CASEY, IL M.P. QS-104.29

DESIGNED	DIGITIZED	CHECKED	DATE
IRC/SWS	IRC/SWS	IRC/DBA	05-02-12

DESIGN DATE	REV. NO.	DRAWING	SHEET NO	FILE	SHEET
05-02-12	1	-----	-----	QS10429	C02

29CWU

HXP-3R2 APPLICATION DESIGN CARD

OPTION 90 (CABINET #)	CABINET #

PASSWORD(_ _✳_ _)(SEE MANUAL 100052-001 AA0 1-27	TRACK 1	TRACK 2	DEFAULT
APPROACH LENGTH ADJUSTMENT	3212'	3212'	9,999 FT.
WARNING TIME ADJUSTMENT	30 SEC.	30 SEC.	99 SEC.
LUMPED IMPEDANCE ADJUSTMENT (LIA)	✳	✳	0
TRANSMITTER CHECK ADJUSTMENT (TC)	✳	✳	0
MOTION DETECT RESTART (MD RESTART)	0 ☆	0 ☆	99%
OPTION 1 TRACK ENABLE (TK-ENA)	UP	UP	UP (ALWAYS ENABLED)
OPTION 2 TRACK FREQUENCY (TK F0)	STRAP ◇	STRAP ◇	0 HZ
OPTION 3 CONSTANT WARNING/MOTION (CW/MD)	C	C	d (Motion)
OPTION 4 UNI/BIDIRECTIONAL (UNI-BI)	U	U	b (bi)
OPTION 5 NARROW BAND COMPENSATION (NBS-C)	⊗	⊗	9,999 FT.
OPTION 6 CWE WARNING TIME (CWEWT)	80 SEC.	80 SEC.	80 SEC.
OPTION 7 LOSS OF SHUNT TIME (LOS)	16 SEC.	16 SEC.	16 SEC.
OPTION 8 LOS W/JOINTS NEAR ISLAND (IJ-LOS)	5 SEC. ✳✳	5 SEC. ✳✳	5 SEC.
OPTION 9 BALLAST COMPENSATION (BC)	✳	✳	FREQUENCY DEPENDANT ◎
OPTION 10 PHASE COMPENSATION ADJUSTMENT (P-COMP)	~~✳✳✳~~	~~✳✳✳~~	0°

	AX OPTIONS △	OPTION 11 AX DRIVE #1	OPTION 12 AX DRIVE #2	OPTION 13 AX DRIVE #3	DEFAULT
ITEM 1	TRACK ASSIGNMENT (TK-ASN)	1	N/A	N/A	1
ITEM 2	OFFSET DISTANCE TRACK 1 (OF-TK1)	1252'	0000'	0000'	0 FT.
ITEM 3	OFFSET DISTANCE TRACK 2 (OF-TK2)	N/A	N/A	N/A	N/A
ITEM 4	WARNING TIME (WT)	30 SEC.	99 SEC.	99 SEC.	99 SEC.
ITEM 5	MOTION DETECT RESTART (MD-RST)	99 %	99 %	99 %	99 %
ITEM 6	CONSTANT WARNING/MOTION (CW/MD)	C	d	d	d (Motion)
ITEM 7	CLEAR JOINTS LOS (CJ-LOS)	00 SEC.	00 SEC.	00 SEC.	0 SEC.
ITEM 8	POST JOINT DETECTION (PJ-DET)	15 SEC.	15 SEC.	15 SEC.	15 SEC.
ITEM 9	POST JOINT RX (PJ-RX)	15	15	15	15
ITEM 10	POSITIVE START	dn	dn	dn	dn
OPTION 17 MDR DRIVE OR AX RELAY DRIVE SELECTION (MDR-AX)			◎	N/A	dn (STATUS ONLY) ◎

	OPTION 17 SUB-MENU	TRACK 1	TRACK 2	DEFAULT
ITEM 1	MDR-AX OFFSET DISTANCE TRK. 1(OF-TK1) & TRK. 2(OF-TK2)	0000'	0000'	0 FT.= CONFIGURED AS MDR
ITEM 2	MDR-AX CLEAR JOINT LOS TIME (CJ-LOS)	00 SEC.	00 SEC.	0 SEC.
ITEM 3	MDR-AX POST JOINT DETECTION TIME (PJ-DET)	15 SEC.	15 SEC.	15 SEC.
ITEM 4	POST JOINT RX (PJ-RX)	15	15	15 (0 = DISABLE)
OPTION 18 MOTION DETECTOR TIMER (MD-TMR)		10 MIN.	10 MIN.	10 MIN. (0 = DISABLE)
OPTION 19 MINIMUM WARNING TIME WITH ADVANCED PREEMPTION (MIN-WT)		00 SEC.	00 SEC.	00 SEC. (0 = DISABLE)
	OPTION 20 FALSE SHUNT TIMER ADJUSTMENT (FS-TMR)			
ITEM 1	FALSE SHUNT RX (FS-RX)	0	0	0, 0 = DISABLE
ITEM 2	FALSE SHUNT TIMER ADJUSTMENT (FS-TM)	10	10	10
	OPTION 21 POSITIVE START RX & TIMER ADJUSTMENT (POS-ST)			
ITEM 1	POSITIVE START RX (POS-RX)	0	0	0, 0 = DISABLE
ITEM 2	POSITIVE START TIMER (POS-TM)	10	10	10
	OPTION 22 APPROACH RELEASE RX (AR-TM)			
ITEM 1	APPROACH RELEASE RX (AR-RX)	0	0	0, 0 = DISABLE
ITEM 2	APPROACH RELEASE TIMER (AR-TM)	10	10	10
OPTION 47 AUTO RX ADJUSTMENT (ATO-RX)		dn	dn	dn = DISABLE
OPTION 48 PREDICTIVE FILTER ENABLE/DISABLE (PF-ENA)		UP	UP	UP = ENABLE
OPTION 49 RESET LOCAL PARAMETERS TO DEFAULT SETTINGS (RESET)				PAGE 3-14 & 3-41
OPTION 50 RECORDER PRINTER CONTROL (PRNTR)			⊕	PAGE 1-47 & 3-41
OPTION 51 CLOCK ADJUSTMENT (CLOCK)			⊕	PAGE 3-32
	OPTION 70 LOCAL SERIAL I/O PORT ADJUSTMENT (LSP)			
ITEM 1	BAUD RATE	38.4	⊕	PAGE 1-47 & 3-42
ITEM 2	DBITS (DATA BITS)	8	⊕	PAGE 1-47 & 3-42
ITEM 3	PA (PARITY)	NO(-=NO PARITY)	⊕	PAGE 1-47 & 3-42
OPTION 90 CABINET NUMBER DISPLAY (CAB)		✳		PAGE 1-47 & 3-41
OPTION 91 HXP-3 OPERATING PROGRAM VERSION NUMBER (VERS)		✳		VERSION 35.0
OPTION 99 RESET PASSWORD TIMER (TIMER)		⊕		PAGE 3-30

NOTE:

✳ = ENTRY TO BE DONE ON AS-IN-SERVICE.

☆ = NORMALLY SET AT "0" SEE MANUAL 100052-001 AA0 PG. 1-46 & 3-41.

◇ = THE WORD STRAP IS DISPLAYED WHEN FREQUENCY SELECT DIP SWITCHES USED TO SELECT A STANDARD FREQUENCY.

⊗ = ADJUSTMENT NECESSARY ONLY WHEN AX RELAY DRIVE MODULE USED.

✳✳ = ADJUSTMENT NECESSARY IF INSULATED JOINTS ARE LOCATED NEAR ISLAND CIRCUIT.

~~✳✳✳~~ = ADJUSTMENT NECESSARY ONLY IF VERY POOR BALLAST CONDITIONS NEED TO BE COMPENSATED.

◎ = OPTION 17 SUB-MENU USED ONLY WHEN AX RELAY DRIVE OPERATION IS SELECTED. ENTERING AN OFFSET DISTANCE VALUE OTHER THAN ZERO ASSIGNS A MDR AS AN AX DRIVE.

△ 1. WHEN AXD MODULES ARE NOT INSTALLED, THEIR ASSOCIATED OPTIONS AND ADJUSTMENTS ARE NOT DISPLAYED.
2. PROGRAM UNUSED AX OPTION(S) SAME AS OPTION 11. IF AX OPTION 12 OR 13 IS USED IN FUTURE THEN REPROGRAM AS APPLICABLE.

◎ = FREQUENCY DEPENDANT, RANGE BETWEEN 50-250 TO BE SUPPLIED ON AS-IN-SERVICE.

⊕ = OPTIONS 50-99 ARE NON-VITAL AND NOT REQUIRED FOR INITIAL SETUP. SEE MANUAL 100052-001 AA0. FOR OPTIONS 49 TO 99 SEE PAGES AS LISTED IN DEFAULT COLUMN.

⊕ = SET CORRECT LOCAL TIME AND DATE. TIME OF DAY SHOULD BE SYNCRONIZED WITH TIME SHOWN BY EXTERNAL EVENT RECORDER.

NEW WORK

invensys Rail

PROJ #: IL2012015
PROJ #: IL2012016
DES BY: S. SPENCE
CHK BY: D. ALBRIGHT
DATE: 05-02-12

CSX TRANSPORTATION
RAIL TRANSPORT GROUP ENGINEERING
COMMUNICATIONS AND SIGNALS

SIGNALS 104W & 104E

T.R. 66A (450TH ST.) 546356T
DETECTION DEVICE PROGRAM
CASEY, IL M.P. QS-104.29

DESIGNED	DIGITIZED	CHECKED	DATE
IRC/SWS	IRC/SWS	IRC/DBA	05-02-12

DESIGN DATE	REV. NO.	DRAWING	SHEET NO	FILE	SHEET
05-02-12	1	-----	-----	QS10429	C03

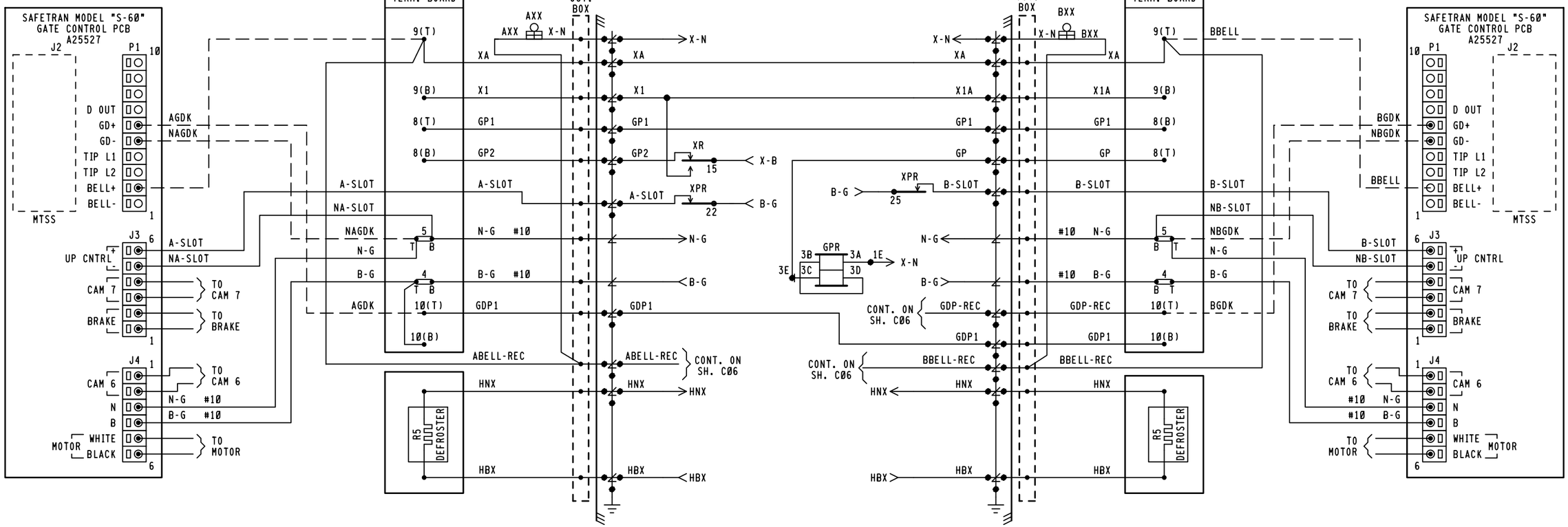

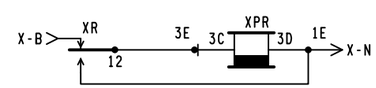

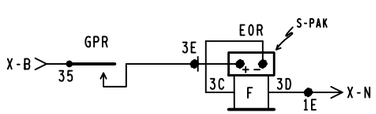

NOTES:

1. = TERMINAL IN JCT. BOX BASE
2. ALL WIRING #16 UNLESS NOTED OTHERWISE.
3. — — · = INTERNAL GATE WIRING NOT USED

NEW WORK

invensys Rail

PROJ #: IL2012015
PROJ #: IL2012016
DES BY: S. SPENCE
CHK BY: D. ALBRIGHT
DATE: 05-02-12

PMD3RCPML.C03
REV. 09-30-10

CSX TRANSPORTATION

RAIL TRANSPORT GROUP ENGINEERING
COMMUNICATIONS AND SIGNALS

SIGNALS 104W & 104E

T.R. 66A (450TH ST.) 546356T
CROSSING WARNING DEVICE GATE CIRCUITRY
CASEY, IL M.P. QS-104.29

DESIGNED	DIGITIZED	CHECKED	DATE
IRC/SWS	IRC/SWS	IRC/DBA	05-02-12

DESIGN DATE	REV. NO.	DRAWING	SHEET NO	FILE	SHEET
05-02-12	1	-----	-----	QS10429	C04

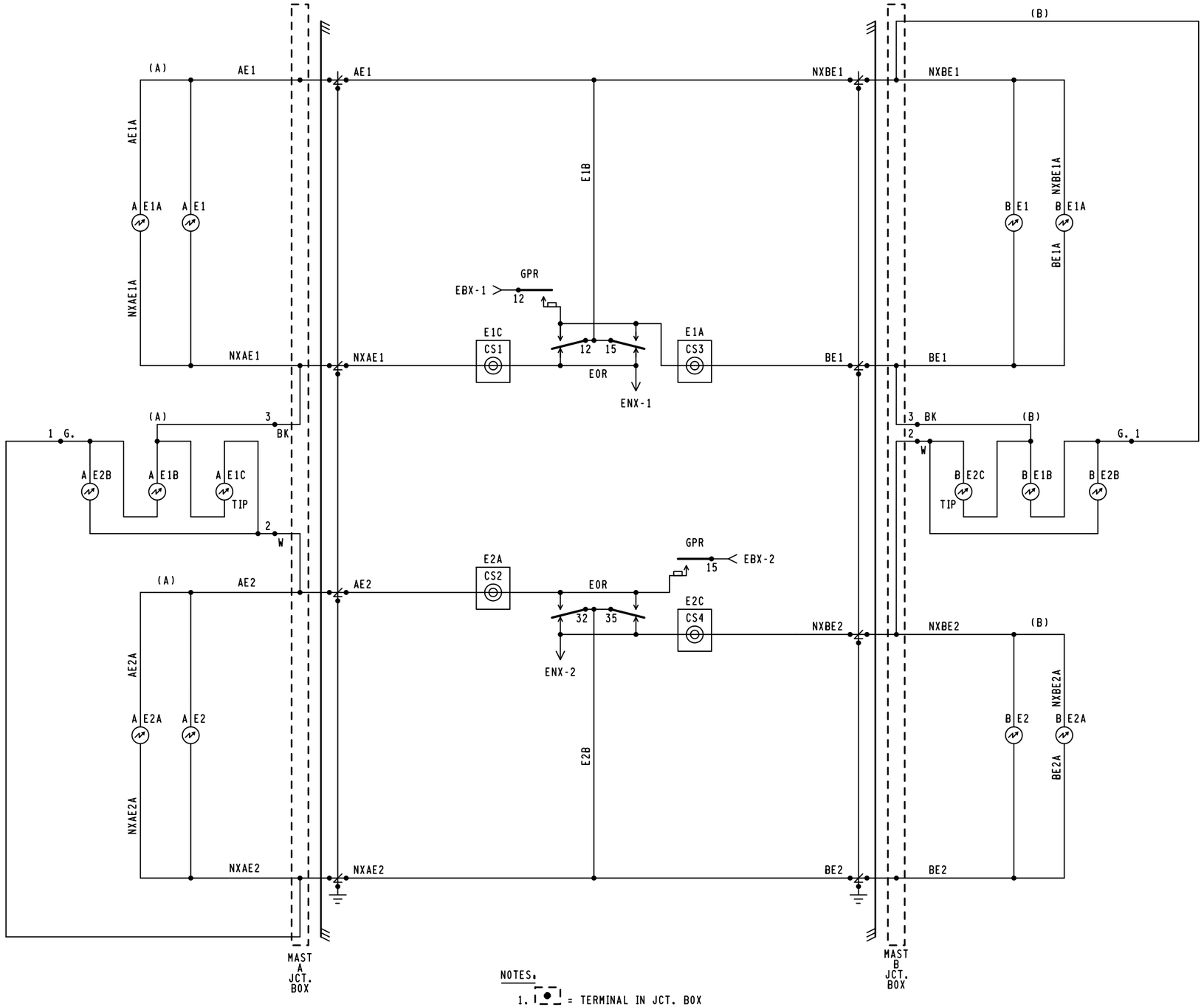

NOTES:

1. = TERMINAL IN JCT. BOX
2. WHEN 7 OR MORE LIGHTS ON A SINGLE STRUCTURE REFER TO SS-382 FOR REQUIRED ARRESTER RATING.

NEW WORK

invensys Rail

PROJ #: IL2012015
PROJ #: IL2012016
DES BY: S. SPENCE
CHK BY: D. ALBRIGHT
DATE: 05-02-12

CSX TRANSPORTATION

RAIL TRANSPORT GROUP ENGINEERING
COMMUNICATIONS AND SIGNALS

SIGNALS 104W & 104E

T.R. 66A (45TH ST.) 546356T

CROSSING WARNING DEVICE LIGHT CIRCUITRY

CASEY, IL M.P. QS-104.29

PMD3RCPML.C04
REV. 09-30-10

DESIGNED	DIGITIZED	CHECKED	DATE
IRC/SWS	IRC/SWS	IRC/DBA	05-02-12

DESIGN DATE	REV. NO.	DRAWING	SHEET NO	FILE	SHEET
05-02-12	1	-----	-----	QS10429	C05

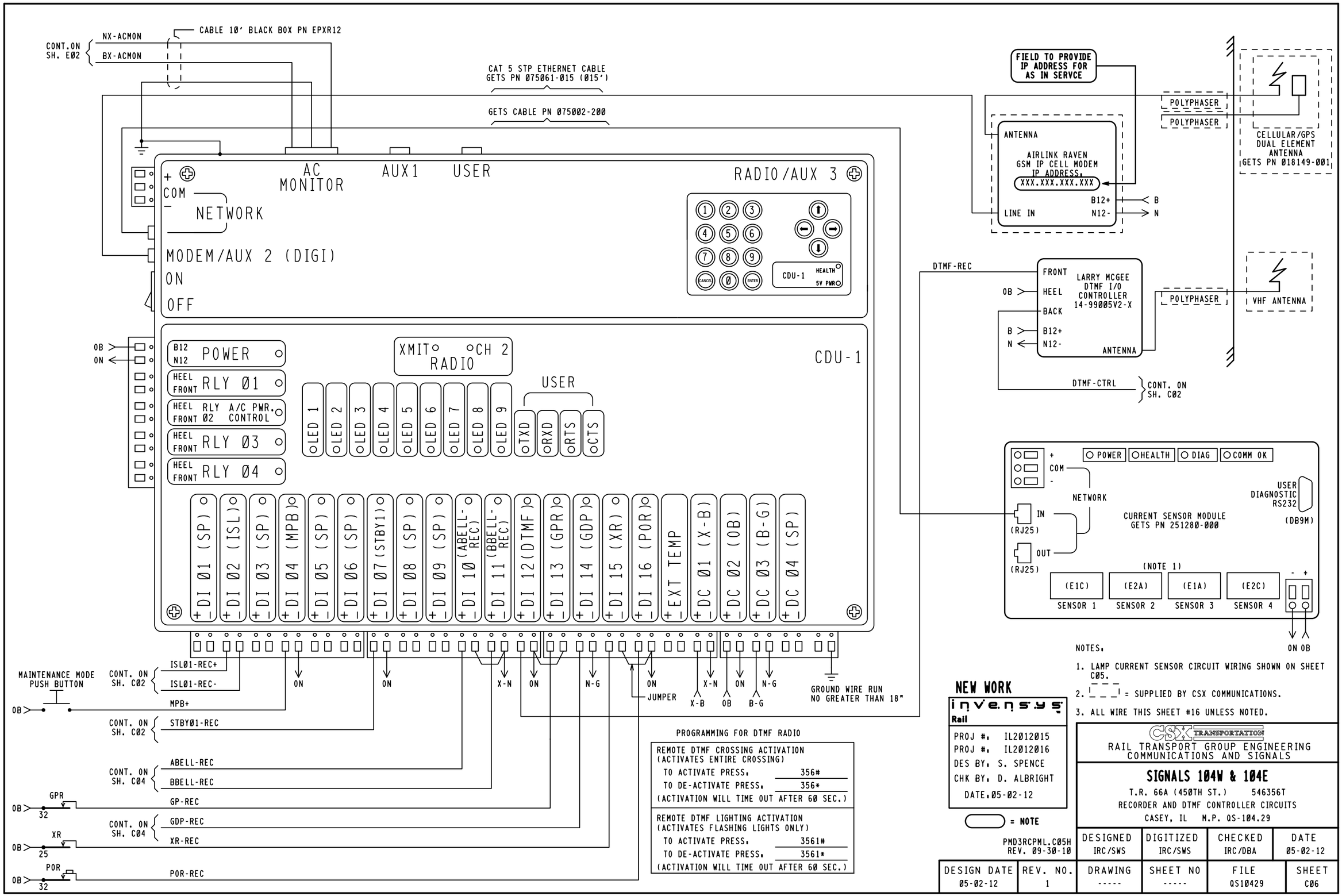

PROGRAMMING FOR DTMF RADIO

REMOTE DTMF CROSSING ACTIVATION (ACTIVATES ENTIRE CROSSING)	
TO ACTIVATE PRESS.	356#
TO DE-ACTIVATE PRESS.	356*
(ACTIVATION WILL TIME OUT AFTER 60 SEC.)	
REMOTE DTMF LIGHTING ACTIVATION (ACTIVATES FLASHING LIGHTS ONLY)	
TO ACTIVATE PRESS.	3561#
TO DE-ACTIVATE PRESS.	3561*
(ACTIVATION WILL TIME OUT AFTER 60 SEC.)	

NOTES.

1. LAMP CURRENT SENSOR CIRCUIT WIRING SHOWN ON SHEET C05.
2. _ _ _ | = SUPPLIED BY CSX COMMUNICATIONS.
3. ALL WIRE THIS SHEET #16 UNLESS NOTED.

NEW WORK

invensys Rail

PROJ #. IL2012015
PROJ #. IL2012016
DES BY. S. SPENCE
CHK BY. D. ALBRIGHT
DATE.05-02-12

= NOTE

PMD3RCPML.C05H
REV. 09-30-10

CSX TRANSPORTATION
RAIL TRANSPORT GROUP ENGINEERING
COMMUNICATIONS AND SIGNALS

SIGNALS 104W & 104E

T.R. 66A (450TH ST.) 546356T
RECORDER AND DTMF CONTROLLER CIRCUITS
CASEY, IL M.P. QS-104.29

DESIGNED	DIGITIZED	CHECKED	DATE
IRC/SWS	IRC/SWS	IRC/DBA	05-02-12

DESIGN DATE	REV. NO.	DRAWING	SHEET NO	FILE	SHEET
05-02-12	1	-----	-----	QS10429	C06

	DEFAULTS AND/OR STYLE	FIELD RECORD
EVENT ANALYZER EXECUTIVE PROGRAM	VERSION 2.7, COMPILED ON NOV. 11, 2003	VERSION ____, COMPILED ON _____ (FIELD TO ENTER)
CSXT USER PROGRAM (IF LOADED)	VERSION 1.01, COMPILED ON 12-01-03 (MM-DD-YY)	VERSION _____, COMPILED ON _____ (FIELD TO ENTER)
SYSTEM SETTINGS		
DATE & TIME (ENABLE DAYLIGHT SAVINGS TIME = Y (YES)	MM-DD-YY 23:01:59	n/a
MILE POST	XYZ-789.01	QS-104.29
SITE NAME	MAIN ST (SR-17,US-1)	T.R 66A (450TH ST.)
DOT NUMBER	123456A	546356T

NOTE TO INSPECTOR: AT IN SERVICE OF EVENT ANALYZER OR UPDATE OF ITS INTERNAL EXECUTIVE PROGRAM OR ITS CSXT USER PROGRAM, THE VERSION NUMBER AND COMPILE DATES OF EACH PROGRAM MUST BE INSERTED IN THE BLANK FIELDS.

EVENT ANALYZER ETHERNET PORT SETUP	
	IP ADDRESS
ETHERNET DIAGNOSTIC PORT (TOP)	192.168.13.2
ETHERNET REMOTE PORT (BOTTOM)	192.168.13.1

BATTERY INPUTS	DC 01	DC 02	DC 03	DC 04
CHANNEL	1	2	3	4
BATTERY CHANNEL NAMES	X-B BULB BATTERY	OB ELECTRONIC BATTERY	B-G GATE BATTERY	SPARE
BATTERY CHANNEL I.D.	X-B	OB	B-G	SP
SAMPLE PERIOD	500 ms	500 ms	500 ms	10,000 ms
RESOLUTION	00.2 V	00.2 V	01.0 V	02.0 V

MODULE-DIGITAL 4 QUAD CURRENT SENSOR SERIAL NUMBER: [_____] (BLANK UNTIL AIS RECEIVED)				
RESOLUTION (AMPS RMS) : [00.2] ARMS				
AUTOMATICALLY ALLOCATED DIGITAL INPUT	DI 17	DI 18	D1 19	D1 20
DIGITAL 4 QUAD CURRENT SENSOR	1	2	3	4
NAME	E1C	E2A	E1A	E2C
ID	E1C	E2A	E1A	E2C
LIT BULB COUNT ON EACH CIRCUIT	4	4	4	4
CURRENT READING IN AMPS AT APPROXIMATE 10.0 VOLTS BULB VOLTAGE	2.6	2.6	2.6	2.6

DIGITAL INPUTS	DI 01	DI 02	DI 03	DI 04	DI 05
CHANNEL	1	2	3	4	5
NAME		ISLAND TRACK 1		MAINTENANCE PB	
ID	SP	ISL	SP	MPB	SP
ON NAME		ISL 1 UP		MAINTENANCE PB HI	
OFF NAME		ISL 1 DN		MAINTENANCE PB LOW	
ON DEBOUNCE TIME	1000 ms	100 ms	1000 ms	100 ms	1000 ms
OFF DEBOUNCE TIME	1000 ms	100 ms	1000 ms	100 ms	1000 ms
TOGGLE PERIOD	500 ms	500 ms	500 ms	500 ms	500 ms

CHANNEL	1	2	3	4
NAME	RELAY OUTPUT 01	RELAY OUTPUT 02	RELAY OUTPUT 03	RELAY OUTPUT 04
I.D.	RLY01	RLY02	RLY03	RLY04
ON NAME	ON	ON	ON	ON
OFF NAME	OFF	OFF	OFF	OFF
PULSE DURATION	1000 ms	1000 ms	1000 ms	1000 ms

DIGITAL INPUTS	DI 06	DI 07	DI 08	DI 09	DI 10
CHANNEL	6	7	8	9	10
NAME		STANDBY 1			ABELL REC
ID	SP	STBY 1	SP	SP	ABELL-REC
ON NAME		STANDBY UNIT			ABELL RINGING
OFF NAME		PRIMARY UNIT			ABELL NOT RINGING
ON DEBOUNCE TIME	1000 ms	100 ms	1000 ms	1000 ms	100 ms
OFF DEBOUNCE TIME	1000 ms	100 ms	1000 ms	1000 ms	100 ms
TOGGLE PERIOD	500 ms	500 ms	500 ms	500 ms	500 ms

PORT	USER	AUX 1	MODEM/AUX 2
BAUD RATE	38400	9600	9600
PARITY	N	N	N
DATA BITS	8	8	8
STOP BITS	1	1	1
FLOW CONTROL	NONE	NONE	NONE

DIGITAL INPUTS	DI 11	DI 12	DI 13	DI 14	DI 15	DI 16
CHANNEL	11	12	13	14	15	16
NAME	BBELL REC	DTMF/TEST	GATE VERTICAL	GATE HORIZONTAL	XR	AC POWER OFF
ID	BBELL-REC	DTMF	GP	GDP	XR	POR
ON NAME	BBELL RINGING	DTMF TEST ON	GATE VERTICAL	GATE HORIZONTAL	XR UP	AC POWER ON
OFF NAME	BBELL NOT RINGING	DTMF TEST OFF	GATE NOT VERTICAL	GATE NOT HORIZONTAL	XR DN	AC POWER OFF
ON DEBOUNCE TIME	100 ms	100 ms	100 ms	100 ms	100 ms	100 ms
OFF DEBOUNCE TIME	100 ms	100 ms	100 ms	100 ms	100 ms	100 ms
TOGGLE PERIOD	500 ms	500 ms	500 ms	500 ms	500 ms	500 ms

NEW WORK

invensys Rail

PROJ #: IL2012015
PROJ #: IL2012016
DES BY: S. SPENCE
CHK BY: D. ALBRIGHT
DATE: 05-02-12

= NOTE

PMD3RCPML.C06
REV. 01-08-10

CSX TRANSPORTATION
RAIL TRANSPORT GROUP ENGINEERING
COMMUNICATIONS AND SIGNALS

SIGNALS 104W & 104E

T.R. 66A (450TH ST.) 546356T
RECORDER PROGRAM
CASEY, IL M.P. QS-104.29

DESIGNED	DIGITIZED	CHECKED	DATE
IRC/SWS	IRC/SWS	IRC/DBA	05-02-12

DESIGN DATE	REV. NO.	DRAWING	SHEET NO	FILE	SHEET
05-02-12	1	-----	-----	QS10429	C07

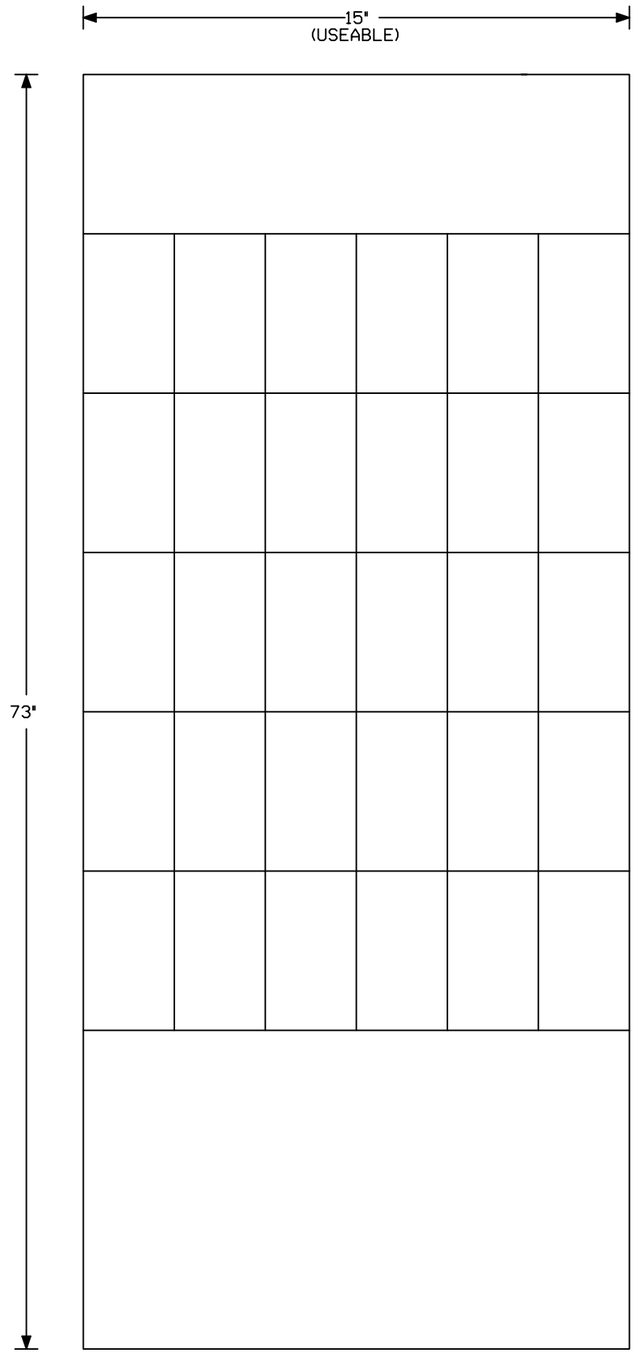

FRONT VIEW
NO SCALE

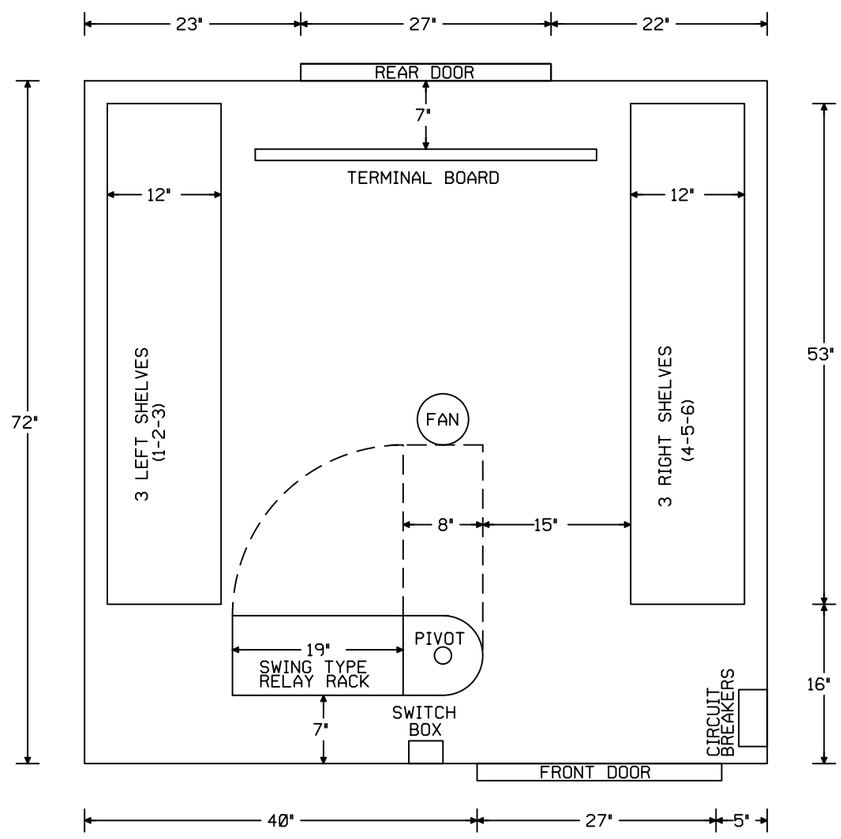

6' x 6' HOUSE
SERRMI PRODUCTS INC.

REDRAWN FROM
DWG. 8406-1043
SH. 8

NEW SHEET

invensys
Rail

PROJ #. IL2012015
PROJ #. IL2012016
DES BY. K. PAXTON
CHK BY. D. ALBRIGHT
DATE. 05-02-12

= NOTE

CSX TRANSPORTATION
RAIL TRANSPORT GROUP ENGINEERING
COMMUNICATIONS AND SIGNALS

SIGNALS 104W & 104E

RELAY RACK DETAIL HOUSE ARRANGEMENT
CASEY, IL M.P. QS-104.29

BLANK(14X22).SC
REV. 01-31-05

DESIGNED	DIGITIZED	CHECKED	DATE
IRC/KSP	IRC/KSP	IRC/DBA	05-02-12

DESIGN DATE	REV. NO.	DRAWING	SHEET NO	FILE	SHEET
05-02-12	1	-----	-----	QS10429	C08

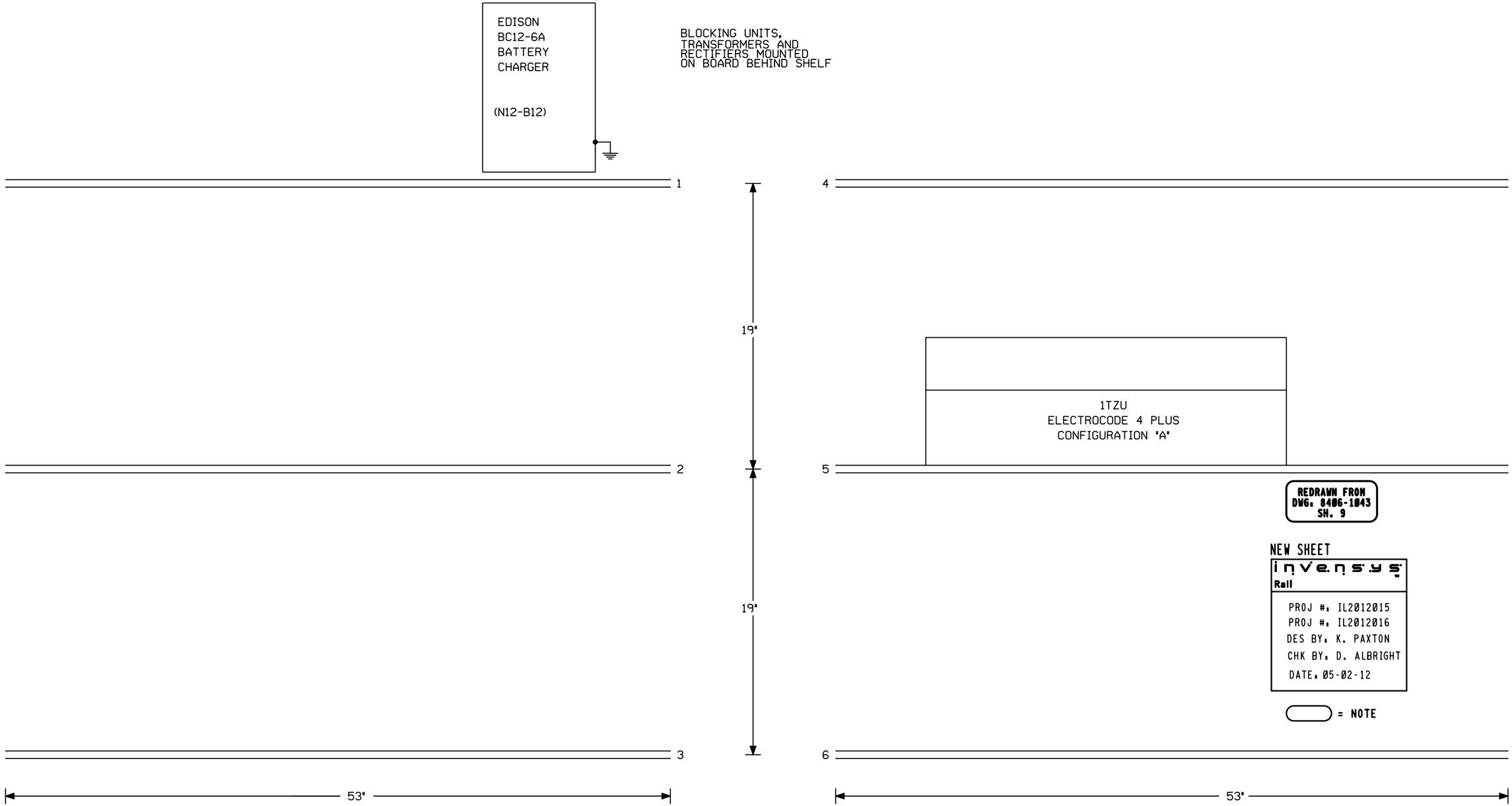

CSX TRANSPORTATION

RAIL TRANSPORT GROUP ENGINEERING
COMMUNICATIONS AND SIGNALS

SIGNALS 104W & 104E

SHELF ARRANGEMENT
CASEY, IL M.P. QS-104.29

BLANK(14X22).SC
REV. 01-31-05

DESIGNED	DIGITIZED	CHECKED	DATE
IRC/KSP	IRC/KSP	IRC/DBA	05-02-12

DESIGN DATE	REV. NO.	DRAWING	SHEET NO	FILE	SHEET
05-02-12	1	-----	-----	QS10429	C09

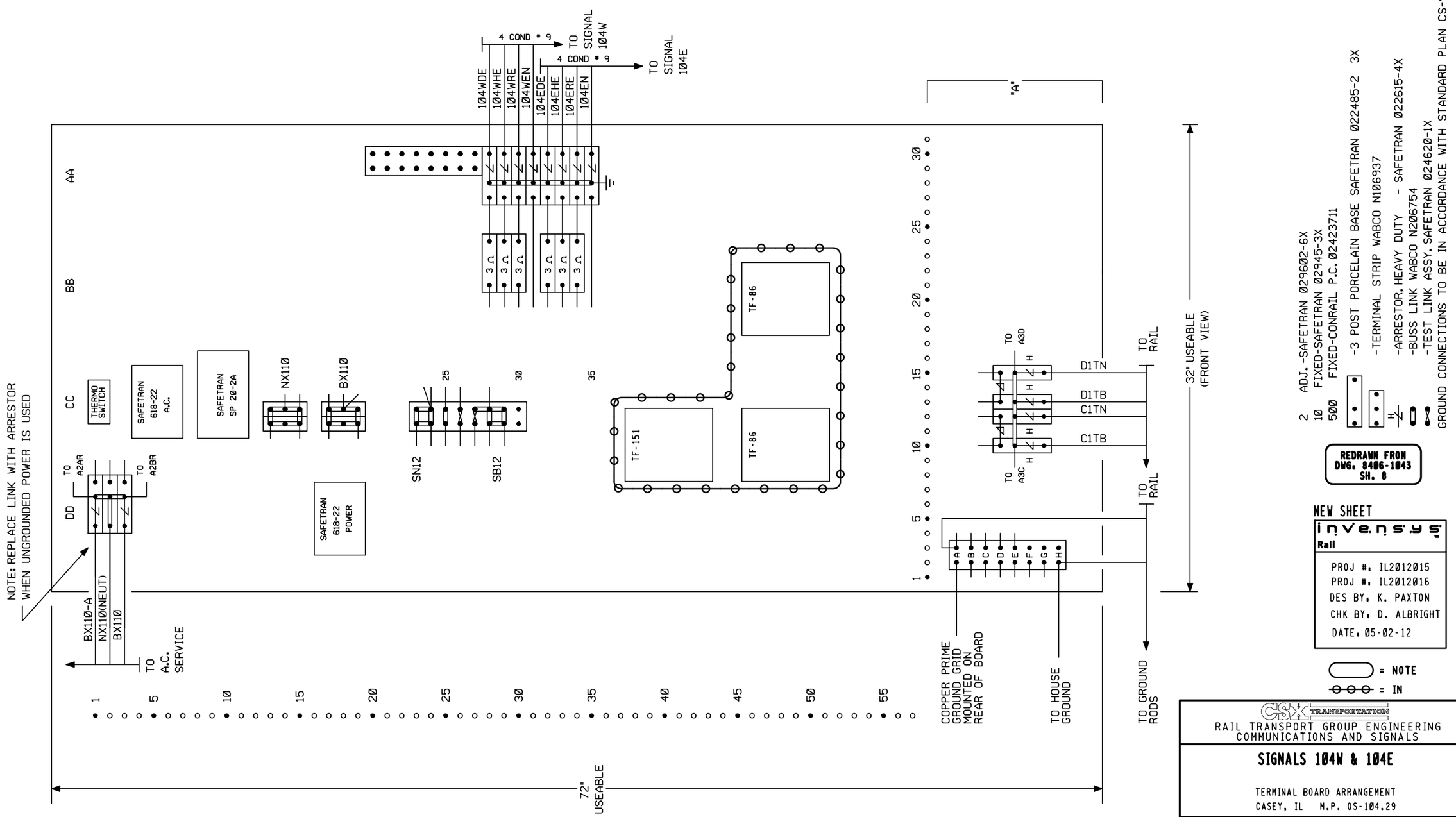
NOTE: REPLACE LINK WITH ARRESTOR WHEN UNGROUNDED POWER IS USED
AA
BB
CC
DD
THERMO SWITCH
SAFETRAN 618-22 A.C.
SAFETRAN SP 20-2A
SAFETRAN 618-22 POWER
NX110
BX110
SN12
SB12
TF-151
TF-86
TF-86
4 COND # 9
TO SIGNAL 104W
TO SIGNAL 104E
104WDE
104WHE
104WRE
104WEN
104EDE
104EHE
104ERE
104EN
3 Ω
TO A2AR
TO A2BR
BX110-A
NX110(NEUT)
BX110
TO A.C. SERVICE
72" USEABLE
"A"
TO A3D
TO A3C
D1TN
D1TB
C1TN
C1TB
TO RAIL
32" USEABLE (FRONT VIEW)
COPPER PRIME GROUND GRID MOUNTED ON REAR OF BOARD
TO HOUSE GROUND
TO GROUND RODS
2 ADJ.-SAFETRAN 029602-6X
10 FIXED-SAFETRAN 02945-3X
500 FIXED-CONRAIL P.C. 02423711
-3 POST PORCELAIN BASE SAFETRAN 022485-2 3X
-TERMINAL STRIP WABCO N106937
-ARRESTOR, HEAVY DUTY - SAFETRAN 022615-4X
-BUSS LINK WABCO N206754
-TEST LINK ASSY. SAFETRAN 024620-1X
GROUND CONNECTIONS TO BE IN ACCORDANCE WITH STANDARD PLAN CS-9001-A
REDRAWN FROM DWG. 8406-1043 SH. 8
NEW SHEET
invensys
Rail
PROJ #. IL2012015
PROJ #. IL2012016
DES BY. K. PAXTON
CHK BY. D. ALBRIGHT
DATE. 05-02-12
= NOTE
= IN
CSX TRANSPORTATION
RAIL TRANSPORT GROUP ENGINEERING
COMMUNICATIONS AND SIGNALS
SIGNALS 104W & 104E
TERMINAL BOARD ARRANGEMENT
CASEY, IL M.P. QS-104.29
BLANK(14X22).SC
REV. 01-31-05
DESIGNED IRC/KSP
DIGITIZED IRC/KSP
CHECKED IRC/DBA
DATE 05-02-12
DESIGN DATE 05-02-12
REV. NO. 1
DRAWING -----
SHEET NO -----
FILE QS10429
SHEET C10

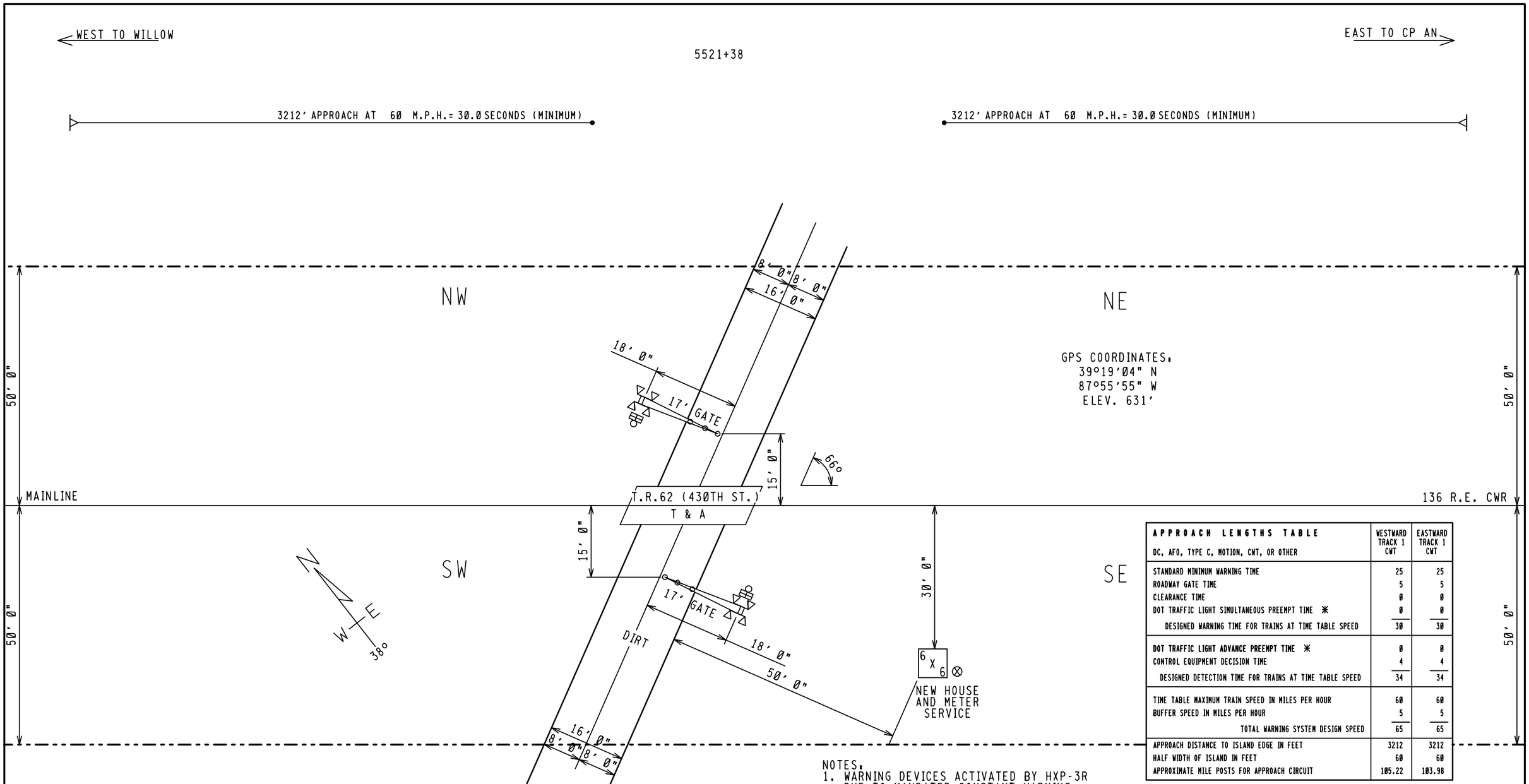

APPROACH LENGTHS TABLE DC, AFO, TYPE C, MOTION, CWT, OR OTHER	WESTWARD TRACK 1 CWT	EASTWARD TRACK 1 CWT
STANDARD MINIMUM WARNING TIME	25	25
ROADWAY GATE TIME	5	5
CLEARANCE TIME	0	0
DOT TRAFFIC LIGHT SIMULTANEOUS PREEMPT TIME ✳	0	0
DESIGNED WARNING TIME FOR TRAINS AT TIME TABLE SPEED	30	30
DOT TRAFFIC LIGHT ADVANCE PREEMPT TIME ✳	0	0
CONTROL EQUIPMENT DECISION TIME	4	4
DESIGNED DETECTION TIME FOR TRAINS AT TIME TABLE SPEED	34	34
TIME TABLE MAXIMUM TRAIN SPEED IN MILES PER HOUR	60	60
BUFFER SPEED IN MILES PER HOUR	5	5
TOTAL WARNING SYSTEM DESIGN SPEED	65	65
APPROACH DISTANCE TO ISLAND EDGE IN FEET	3212	3212
HALF WIDTH OF ISLAND IN FEET	60	60
APPROXIMATE MILE POSTS FOR APPROACH CIRCUIT	105.22	103.98

✳AUTHORIZING AGENCY: NONE
✳DATE OF REQUIREMENT: NONE
✳AMOUNT OF TIME (SEC.): NONE

NOTES:
1. WARNING DEVICES ACTIVATED BY HXP-3R DUE TO MANDATED CONSTANT WARNING.
2. TO BE CLUSTERED WITH ADJACENT CROSSING T.R. 66A DUE TO DAX CIRCUIT (IL2012015).

FILE NAME: QS10460.H01	REVISION DATES	PRODUCED FOR:	PRODUCED BY:	LEGEND	GUARD RAIL	METER SERVICE ⊗	STREET NAME: T.R. 62 (430TH ST.)
DATE DRAWN: 04/17/2012	05-02-12 SWS	CSX TRANSPORTATION	invensys Rail	CSX ROW	O.H. POWER	POLE Ⓟ	CITY & STATE: CASEY, IL
DRAWN BY: LEWIS, CLINT	- -	RAIL TRANSPORT GROUP ENGINEERING	7775 BAYMEADOWS WAY	R/R POLELINE	FENCE	FIRE PLUG Ⓕ	PROJECT #: IL2012016
CHECKED BY: PROSPERO, ERNESTO	- -	COMMUNICATIONS AND SIGNALS	SUITE 250	GAS	WATER	SEWER CAP Ⓢ	OP #: IL0367
SSC #: JXXD02810	- -		JACKSONVILLE, FL 32256	FIBER OPTIC	SEWER	GAS VENT Ⓥ	DOT #: 546357A

PROPOSED CROSSING LAYOUT
1"=20'

INDEX

CONTENTS

SH. NO.		REVISION NO. 1	2	3	4	5	6	7	8	9
I01	INDEX AND REVISIONS									
S01	TRACK AND SIGNAL PLAN									
E01	POWER DISTRIBUTION									
C01	CROSSING DETECTION CIRCUITRY									
C02	DETECTION DEVICE PROGRAM									
C03	CROSSING WARNING DEVICE GATE CIRCUITRY									
C04	CROSSING WARNING DEVICE LIGHT CIRCUITRY									
C05	RECORDER AND DTMF CONTROLLER CIRCUITS									
C06	RECORDER PROGRAM									

= DESIGN COMPLETED

= REVISION COMPLETED

REVISIONS

REV. NO.	PROJECT NO.	DESIGN DATE	IN SERVICE DATE	REVISION DATE
1	IL2012016	05-02-12		

TO BE COMPLETED ON A.I.S.

NEW WORK

invensys Rail

PROJ #: IL2012015
PROJ #: IL2012016
DES BY: S. SPENCE
CHK BY: D. ALBRIGHT
DATE: 05-02-12

= NOTE

PMD3RCPML.I01
REV. 09-30-10

CSX TRANSPORTATION
RAIL TRANSPORT GROUP ENGINEERING
COMMUNICATIONS AND SIGNALS

T.R. 62 (430TH ST.) 546357A

INDEX AND REVISIONS
CASEY, IL M.P. QS-104.60

DESIGNED	DIGITIZED	CHECKED	DATE
IRC/SWS	IRC/SWS	IRC/DBA	05-02-12

DESIGN DATE	REV. NO.	DRAWING	SHEET NO	FILE	SHEET
05-02-12	1	-----	-----	QS10460	I01

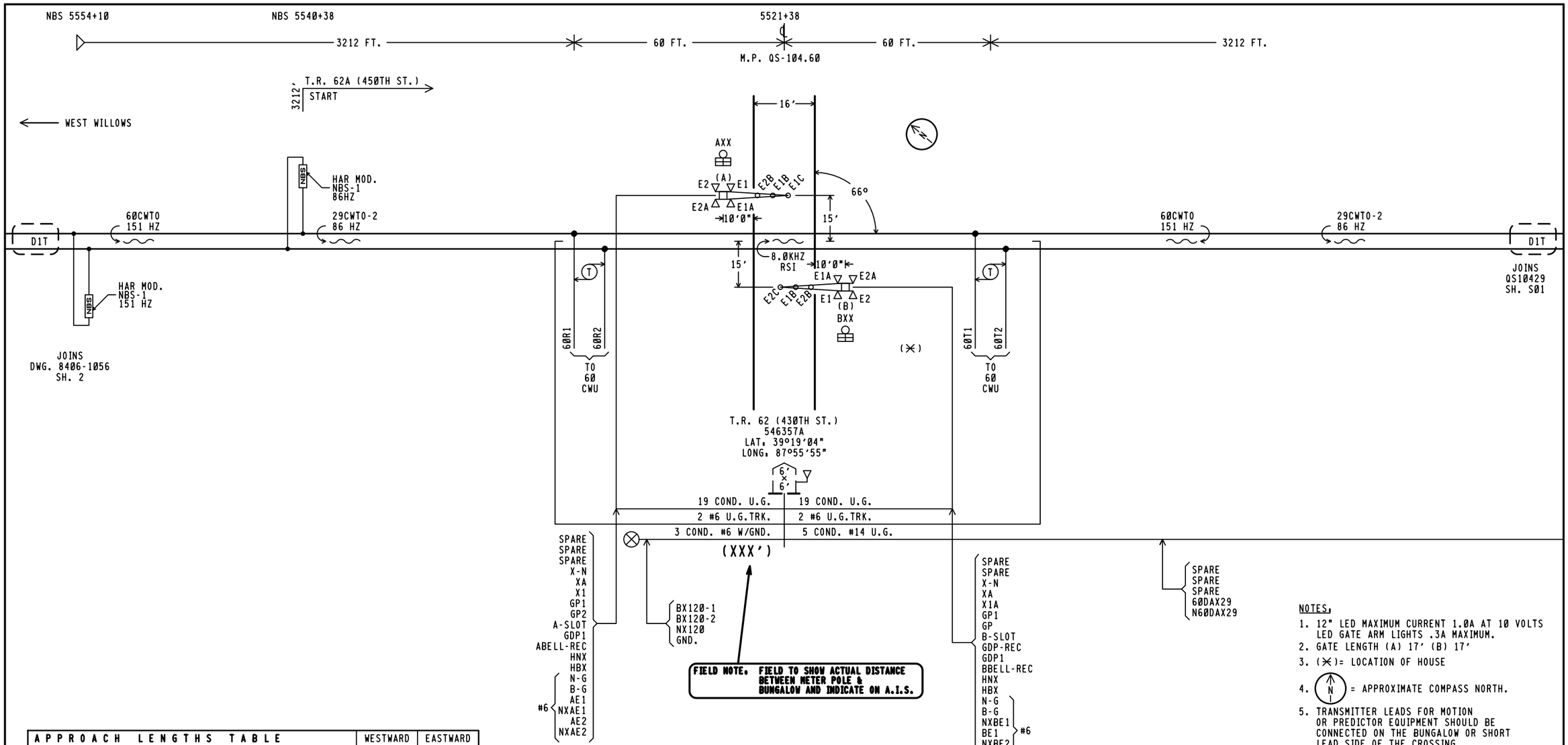

APPROACH LENGTHS TABLE DC, AFO, TYPE C, MOTION, CWT, OR OTHER	WESTWARD TRACK 1 CWT	EASTWARD TRACK 1 CWT
STANDARD MINIMUM WARNING TIME IN SECONDS	25	25
ROADWAY GATE TIME IN SECONDS	5	5
CLEARANCE TIME IN SECONDS	0	0
DOT TRAFFIC LIGHT SIMULTANEOUS PREEMPT TIME IN SECONDS✳	0	0
DESIGNED WARNING TIME FOR TRAINS AT TIME TABLE SPEED	30 SEC.	30 SEC.
DOT TRAFFIC LIGHT ADVANCE PREEMPT TIME IN SECONDS ✳	0	0
CONTROL EQUIPMENT DECISION TIME IN SECONDS	4	4
DESIGNED DETECTION TIME FOR TRAINS AT TIME TABLE SPEED	34 SEC.	34 SEC.
TIME TABLE MAXIMUM TRAIN SPEED IN MILES PER HOUR	60	60
BUFFER SPEED IN MILES PER HOUR	5	5
TOTAL WARNING SYSTEM DESIGN SPEED IN MILES PER HOUR	65	65
APPROACH DISTANCE TO ISLAND EDGE IN FEET	3212	3212
HALF WIDTH OF ISLAND IN FEET	60	60
APPROXIMATE MILE POSTS FOR APPROACH CIRCUIT	105.22	103.98

✳AUTHORIZING AGENCY. NONE
✳DATE OF REQUIREMENT. NONE
✳AMOUNT OF TIME (SEC.). NONE

NOTES.

1. 12" LED MAXIMUM CURRENT 1.0A AT 10 VOLTS LED GATE ARM LIGHTS .3A MAXIMUM.
2. GATE LENGTH (A) 17' (B) 17'
3. (✳)= LOCATION OF HOUSE
4. (N) = APPROXIMATE COMPASS NORTH.
5. TRANSMITTER LEADS FOR MOTION OR PREDICTOR EQUIPMENT SHOULD BE CONNECTED ON THE BUNGALOW OR SHORT LEAD SIDE OF THE CROSSING.
6. ISLAND TRACK LEADS SHOULD BE CONNECTED 50 FEET FROM ROAD EDGE BUT ON NARROW ROADS (20' OR LESS) ISLAND LENGTH SHALL BE 120 FEET.
7. WARNING SYSTEM APPROACH CIRCUIT DISTANCES ARE TO BE MEASURED FROM THE ISLAND TRACK CONNECTIONS.

NEW WORK

invensys Rail

PROJ #. IL2012015
PROJ #. IL2012016
DES BY. S. SPENCE
CHK BY. D. ALBRIGHT
DATE.05-02-12

= NOTE
= EXISTING

CSX TRANSPORTATION
RAIL TRANSPORT GROUP ENGINEERING
COMMUNICATIONS AND SIGNALS

T.R. 62 (430TH ST.) 546357A

TRACK AND SIGNAL PLAN
CASEY, IL M.P. QS-104.60

PMD3RCPML.S01
REV. 09-30-10

DESIGNED	DIGITIZED	CHECKED	DATE
IRC/SWS	IRC/SWS	IRC/DBA	05-02-12

DESIGN DATE	REV. NO.	DRAWING	SHEET NO	FILE	SHEET
05-02-12	1	-----	-----	QS10460	S01

TOP ROW

29DAXR			XR			XPR			GPR			EOR			POR		
12		B8	12	FB	B8	22	F	B36	12	B	B82	12	FB	B81	12	FB	B62
15		C30	15	FB	C30	25	F	C30	15	B	C30	15	FB	C30	15	FB	C30
22			22						22			32	FB		22	FB	
23	F		23						25			35	FB		25	FB	
25	F		25	F					32	F					32	F	
32	F		32						35	B					35		
35			35														

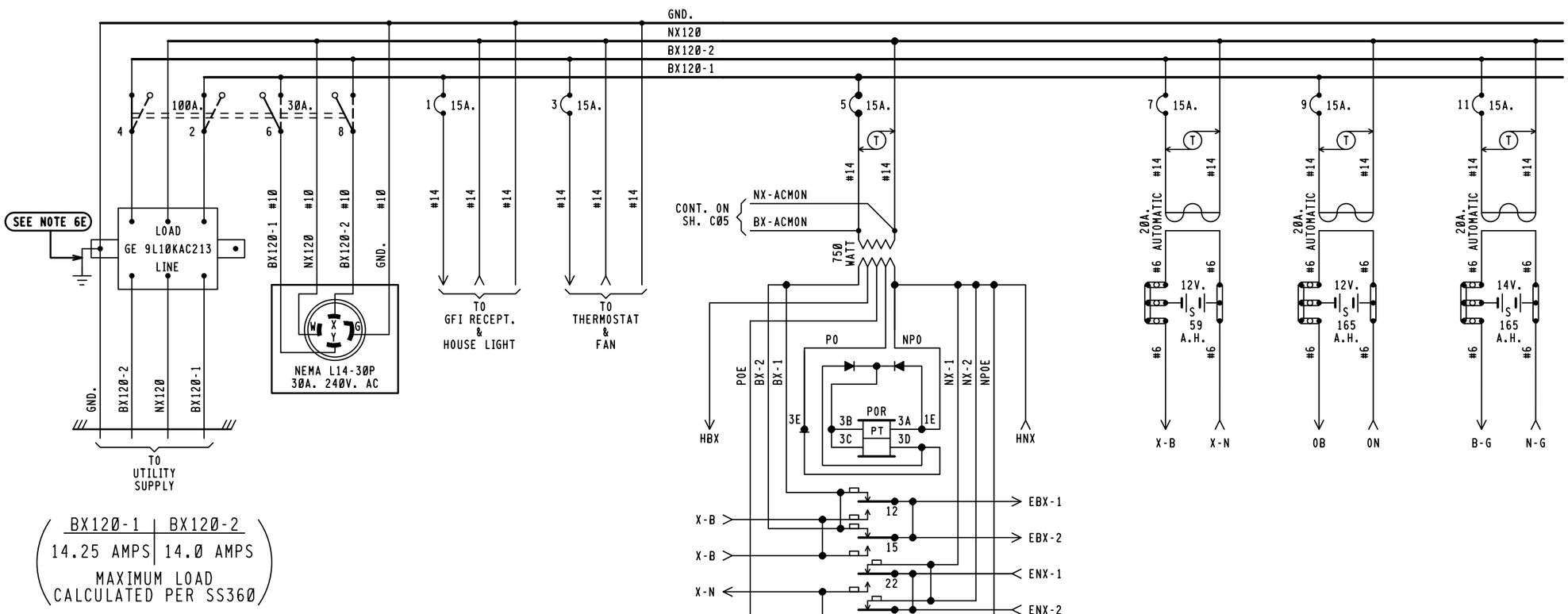

BX120-1	BX120-2
14.25 AMPS	14.0 AMPS

MAXIMUM LOAD
CALCULATED PER SS360

NOTES:

1 - REFERENCES ARE PER SCMS-13.
2 - ARRESTERS ARE PER SS382.
3 - SHELF RELAY PLACEMENT ON CONSIST CHART HAS NO SIGNIFICANCE.
4 - PLUG-IN RELAYS ARE VIEWED FROM THE FRONT OF RACK.
5 - BATTERY A.H. CAPACITY SHOWN IS THE MINIMUM REQUIREMENT.
6 - WIRING
  A - FEED TO ALL BUSSES, LIGHT CIRCUITS,MOTOR CIRCUITS TO BE #10 FLEX.
  B - 120-VOLT FEED FROM ENTRANCE TO POWER BUSS TO BE #10 FLEX.
  C - ALL TRACK WIRES TO BE #10 FLEX.
  D - ALL OTHERS TO BE #16 FLEX UNLESS NOTED.
  E - GROUND WIRE NOT NECESSARY WHEN GE ARRESTER IS MOUNTED ON GROUND PLANE OR METAL ENCLOSURE AFFIXED DIRECTLY TO BUNGALOW METALLIC STRUCTURAL MEMBER.
7 - CIRCUIT INTERRUPTERS 2 & 4 ARE MECHANICALLY INTERLOCKED WITH CIRCUIT INTERRUPTERS 6 & 8.

WILMORE DC-DC CONVERTER
MODEL 1675-12-12-15

INPUT + - 0B 0N
OUTPUT + - B N

NEW WORK

invensys Rail

PROJ #: IL2012015
PROJ #: IL2012016
DES BY: S. SPENCE
CHK BY: D. ALBRIGHT
DATE: 05-02-12

= NOTE

6'X 6' RELAY HOUSE W/FARADAY SHIELD

CSX TRANSPORTATION
RAIL TRANSPORT GROUP ENGINEERING
COMMUNICATIONS AND SIGNALS

T.R. 62 (430TH ST.) 546357A

POWER DISTRIBUTION
CASEY, IL M.P. QS-104.60

PMD3RCPML.E01H
REV. 09-30-10

DESIGNED	DIGITIZED	CHECKED	DATE
IRC/SWS	IRC/SWS	IRC/DBA	05-02-12

DESIGN DATE	REV. NO.	DRAWING	SHEET NO	FILE	SHEET
05-02-12	1	-----	-----	QS10460	E01

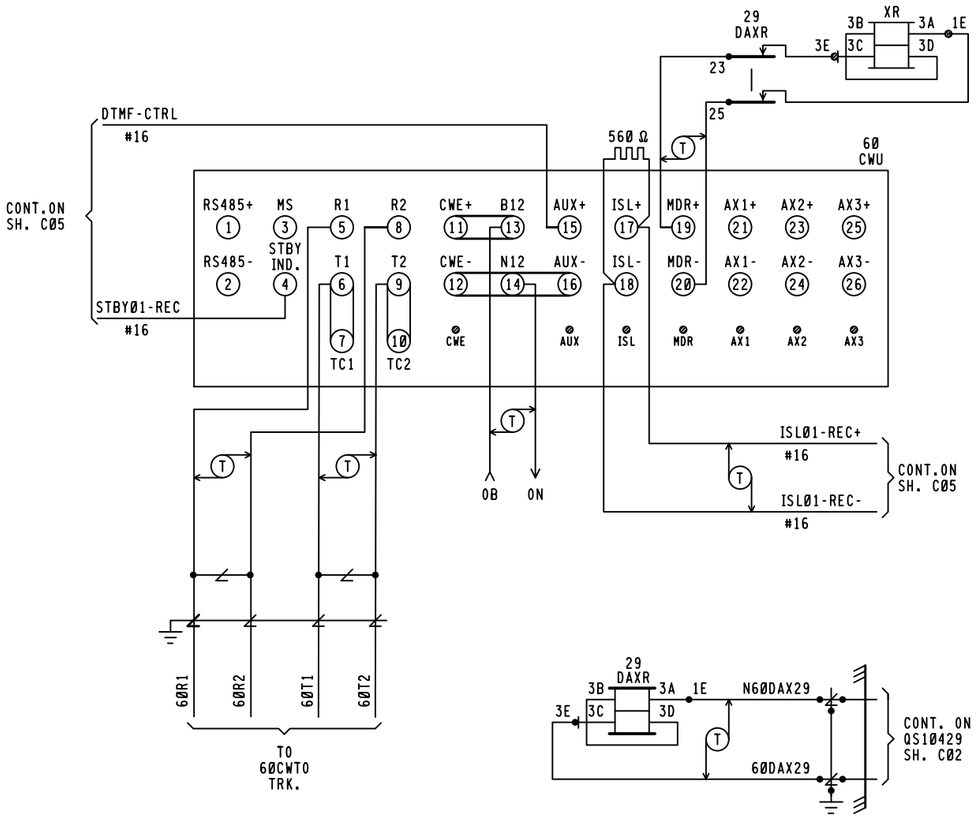

60CWU
HXP-3R MODULES REQUIRED

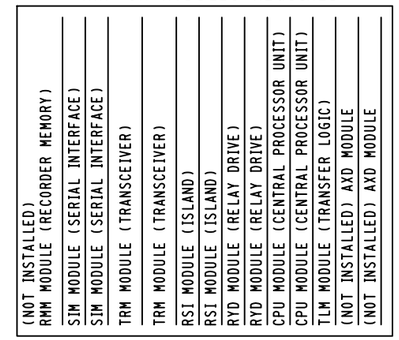

FRONT VIEW

RSI MODULE
226736-001 8.0KHZ

ISLAND FREQ.
8.0KHZ

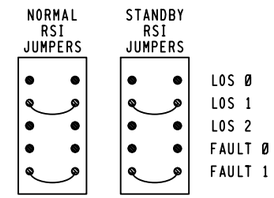

60
CWU

CABINET SWITCHES
THESE SWITCHES ARE LOCATED ON MOTHERBOARD

MASTER/SLAVE

MASTER — SLAVE

S1

SYSTEM CONFIGURATION				
S6 & S7 DIP SWITCH POSITIONS				
SWITCH	1	2	3	4
SWITCH POSITION	ON	OFF	OFF	OFF
APPROACH.	NORMAL		(NOT USED)	

FREQUENCY SELECT						
NORMAL	S2 & S3 DIP SWITCH POSITIONS 151HZ					
	SWITCH	1	2	3	4	5
	SWITCH POSITION	ON	ON	OFF	OFF	OFF
STANDBY	S4 & S5 DIP SWITCH POSITIONS 151HZ					
	SWITCH	1	2	3	4	5
	SWITCH POSITION	ON	ON	OFF	OFF	OFF

TLM MODULE
JUMPERS AND SWITCHES

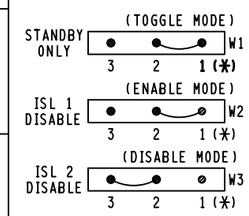

NOTE.
PIN 1 IS IDENTIFIED
BY ASTERICK BELOW IT.
(☆) = MAY BE SET PER
FIELD CONDITIONS.

MINUTE TIMEOUT SWITCH

SETTING	(☆) 9 MINUTES	S1

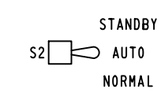

NEW WORK

invensys Rail

PROJ #. IL2012015
PROJ #. IL2012016
DES BY. S. SPENCE
CHK BY. D. ALBRIGHT
DATE. 05-02-12

CSX TRANSPORTATION
RAIL TRANSPORT GROUP ENGINEERING
COMMUNICATIONS AND SIGNALS

T.R. 62 (430TH ST.) 546357A

CROSSING DETECTION CIRCUITRY
CASEY, IL M.P. QS-104.60

DESIGNED	DIGITIZED	CHECKED	DATE
IRC/SWS	IRC/SWS	IRC/DBA	05-02-12

DESIGN DATE	REV. NO.	DRAWING	SHEET NO	FILE	SHEET
05-02-12	1	-----	-----	QS10460	C01

60CWU

HXP-3R APPLICATION DESIGN CARD

OPTION 90 (CABINET #)	CABINET #

PASSWORD(_ _✳_ _)(SEE MANUAL 100052-001 AA0 1-27	TRACK 1	TRACK 2	DEFAULT
APPROACH LENGTH ADJUSTMENT	3212'	N/A	9,999 FT.
WARNING TIME ADJUSTMENT	30 SEC.	N/A	99 SEC.
LUMPED IMPEDANCE ADJUSTMENT (LIA)	✳	N/A	0
TRANSMITTER CHECK ADJUSTMENT (TC)	✳	N/A	0
MOTION DETECT RESTART (MD RESTART)	0 ☆	N/A	99%
OPTION 1 TRACK ENABLE (TK-ENA)	UP	N/A	UP (ALWAYS ENABLED)
OPTION 2 TRACK FREQUENCY (TK F0)	STRAP ◇	N/A	0 HZ
OPTION 3 CONSTANT WARNING/MOTION (CW/MD)	c	N/A	d (Motion)
OPTION 4 UNI/BIDIRECTIONAL (UNI-BI)	b	N/A	b (bi)
OPTION 5 NARROW BAND COMPENSATION (NBS-C)	⊗	N/A	9,999 FT.
OPTION 6 CWE WARNING TIME (CWEWT)	80 SEC.	N/A	80 SEC.
OPTION 7 LOSS OF SHUNT TIME (LOS)	16 SEC.	N/A	16 SEC.
OPTION 8 LOS W/JOINTS NEAR ISLAND (IJ-LOS)	5 SEC. ✳✳	N/A	5 SEC.
OPTION 9 BALLAST COMPENSATION (BC)	✳	N/A	FREQUENCY DEPENDANT ◎
OPTION 10 PHASE COMPENSATION ADJUSTMENT (P-COMP)	~~✳✳✳~~	N/A	0°

AX OPTIONS △		OPTION 11 AX DRIVE #1	OPTION 12 AX DRIVE #2	OPTION 13 AX DRIVE #3	DEFAULT
ITEM 1	TRACK ASSIGNMENT (TK-ASN)	N/A	N/A	N/A	1
ITEM 2	OFFSET DISTANCE TRACK 1 (OF-TK1)	0000'	0000'	0000'	0 FT.
ITEM 3	OFFSET DISTANCE TRACK 2 (OF-TK2)	N/A	N/A	N/A	N/A
ITEM 4	WARNING TIME (WT)	99 SEC.	99 SEC.	99 SEC.	99 SEC.
ITEM 5	MOTION DETECT RESTART (MD-RST)	99 %	99 %	99 %	99 %
ITEM 6	CONSTANT WARNING/MOTION (CW/MD)	d	d	d	d (Motion)
ITEM 7	CLEAR JOINTS LOS (CJ-LOS)	00 SEC.	00 SEC.	00 SEC.	0 SEC.
ITEM 8	POST JOINT DETECTION (PJ-DET)	15 SEC.	15 SEC.	15 SEC.	15 SEC.
ITEM 9	POST JOINT RX (PJ-RX)	15	15	15	15
ITEM 10	POSITIVE START	dn	dn	dn	dn

OPTION 17 MDR DRIVE OR AX RELAY DRIVE SELECTION (MDR-AX)	◎	N/A	dn (STATUS ONLY) ◎

	OPTION 17 SUB-MENU	TRACK 1	TRACK 2	DEFAULT
ITEM 1	MDR-AX OFFSET DISTANCE TRK. 1(OF-TK1) & TRK. 2(OF-TK2)	0000'	N/A	0 FT.= CONFIGURED AS MDR
ITEM 2	MDR-AX CLEAR JOINT LOS TIME (CJ-LOS)	00 SEC.	N/A	0 SEC.
ITEM 3	MDR-AX POST JOINT DETECTION TIME (PJ-DET)	15 SEC.	N/A	15 SEC.
ITEM 4	POST JOINT RX (PJ-RX)	15	N/A	15 (0 = DISABLE)
OPTION 18	MOTION DETECTOR TIMER (MD-TMR)	10 MIN.	N/A	10 MIN. (0 = DISABLE)
OPTION 19	MINIMUM WARNING TIME WITH ADVANCED PREEMPTION (MIN-WT)	00 SEC.	N/A	00 SEC. (0 = DISABLE)
	OPTION 20 FALSE SHUNT TIMER ADJUSTMENT (FS-TMR)			
ITEM 1	FALSE SHUNT RX (FS-RX)	0	N/A	0, 0 = DISABLE
ITEM 2	FALSE SHUNT TIMER ADJUSTMENT (FS-TM)	10	N/A	10
	OPTION 21 POSITIVE START RX & TIMER ADJUSTMENT (POS-ST)			
ITEM 1	POSITIVE START RX (POS-RX)	0	N/A	0, 0 = DISABLE
ITEM 2	POSITIVE START TIMER (POS-TM)	10	N/A	10
	OPTION 22 APPROACH RELEASE RX (AR-TM)			
ITEM 1	APPROACH RELEASE RX (AR-RX)	0	N/A	0, 0 = DISABLE
ITEM 2	APPROACH RELEASE TIMER (AR-TM)	10	N/A	10
OPTION 47	AUTO RX ADJUSTMENT (ATO-RX)	UP	N/A	dn = DISABLE
OPTION 48	PREDICTIVE FILTER ENABLE/DISABLE (PF-ENA)	dn	N/A	dn = DISABLE
OPTION 49	RESET LOCAL PARAMETERS TO DEFAULT SETTINGS (RESET)			PAGE 3-14 & 3-41
OPTION 50	RECORDER PRINTER CONTROL (PRNTR)	⊕		PAGE 1-47 & 3-41
OPTION 51	CLOCK ADJUSTMENT (CLOCK)	⊕		PAGE 3-32
	OPTION 70 LOCAL SERIAL I/O PORT ADJUSTMENT (LSP)			
ITEM 1	BAUD RATE	38.4	⊕	PAGE 1-47 & 3-42
ITEM 2	DBITS (DATA BITS)	8	⊕	PAGE 1-47 & 3-42
ITEM 3	PA (PARITY)	NO(-=NO PARITY)	⊕	PAGE 1-47 & 3-42
OPTION 90	CABINET NUMBER DISPLAY (CAB)	✳		PAGE 1-47 & 3-41
OPTION 91	HXP-3 OPERATING PROGRAM VERSION NUMBER (VERS)	✳		VERSION 35.0
OPTION 99	RESET PASSWORD TIMER (TIMER)	⊕		PAGE 3-30

NOTE:

✳ = ENTRY TO BE DONE ON AS-IN-SERVICE.

☆ = NORMALLY SET AT "0" SEE MANUAL 100052-001 AA0 PG. 1-46 & 3-41.

◇ = THE WORD STRAP IS DISPLAYED WHEN FREQUENCY SELECT DIP SWITCHES USED TO SELECT A STANDARD FREQUENCY.

⊗ = ADJUSTMENT NECESSARY ONLY WHEN AX RELAY DRIVE MODULE USED.

✳✳ = ADJUSTMENT NECESSARY IF INSULATED JOINTS ARE LOCATED NEAR ISLAND CIRCUIT.

~~✳✳✳~~ = ADJUSTMENT NECESSARY ONLY IF VERY POOR BALLAST CONDITIONS NEED TO BE COMPENSATED.

◎ = OPTION 17 SUB-MENU USED ONLY WHEN AX RELAY DRIVE OPERATION IS SELECTED. ENTERING AN OFFSET DISTANCE VALUE OTHER THAN ZERO ASSIGNS A MDR AS AN AX DRIVE.

△ 1. WHEN AXD MODULES ARE NOT INSTALLED, THEIR ASSOCIATED OPTIONS AND ADJUSTMENTS ARE NOT DISPLAYED.
2. PROGRAM UNUSED AX OPTION(S) SAME AS OPTION 11. IF AX OPTION 12 OR 13 IS USED IN FUTURE THEN REPROGRAM AS APPLICABLE.

◎ = FREQUENCY DEPENDANT, RANGE BETWEEN 50-250 TO BE SUPPLIED ON AS-IN-SERVICE.

⊕ = OPTIONS 50-99 ARE NON-VITAL AND NOT REQUIRED FOR INITIAL SETUP. SEE MANUAL 100052-001 AA0. FOR OPTIONS 49 TO 99 SEE PAGES AS LISTED IN DEFAULT COLUMN.

⊕ = SET CORRECT LOCAL TIME AND DATE. TIME OF DAY SHOULD BE SYNCRONIZED WITH TIME SHOWN BY EXTERNAL EVENT RECORDER.

NEW WORK

invensys Rail

PROJ #: IL2012015
PROJ #: IL2012016
DES BY: S. SPENCE
CHK BY: D. ALBRIGHT
DATE: 05-02-12

CSX TRANSPORTATION
RAIL TRANSPORT GROUP ENGINEERING
COMMUNICATIONS AND SIGNALS

T.R. 62 (430TH ST.) 546357A

DETECTION DEVICE PROGRAM
CASEY, IL M.P. QS-104.60

DESIGNED	DIGITIZED	CHECKED	DATE
IRC/SWS	IRC/SWS	IRC/DBA	05-02-12

DESIGN DATE	REV. NO.	DRAWING	SHEET NO	FILE	SHEET
05-02-12	1	-----	-----	QS10460	C02

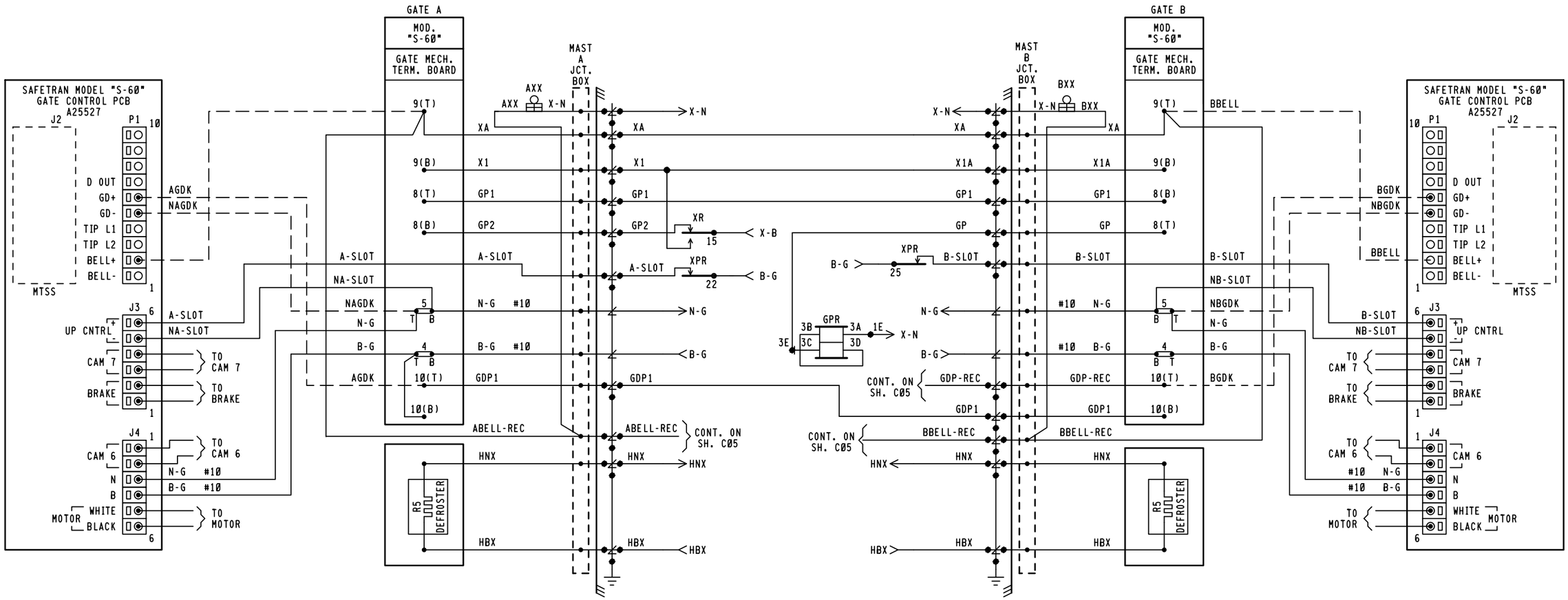

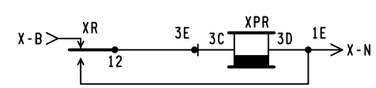

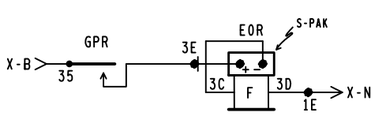

NOTES:

1. = TERMINAL IN JCT. BOX BASE
2. ALL WIRING #16 UNLESS NOTED OTHERWISE.
3. — — · = INTERNAL GATE WIRING NOT USED

NEW WORK

invensys Rail

PROJ #: IL2012015
PROJ #: IL2012016
DES BY: S. SPENCE
CHK BY: D. ALBRIGHT
DATE: 05-02-12

PMD3RCPML.C03
REV. 09-30-10

CSX TRANSPORTATION

RAIL TRANSPORT GROUP ENGINEERING
COMMUNICATIONS AND SIGNALS

T.R. 62 (430TH ST.) 546357A

CROSSING WARNING DEVICE GATE CIRCUITRY
CASEY, IL M.P. QS-104.60

DESIGNED	DIGITIZED	CHECKED	DATE
IRC/SWS	IRC/SWS	IRC/DBA	05-02-12

DESIGN DATE	REV. NO.	DRAWING	SHEET NO	FILE	SHEET
05-02-12	1	-----	-----	QS10460	C03

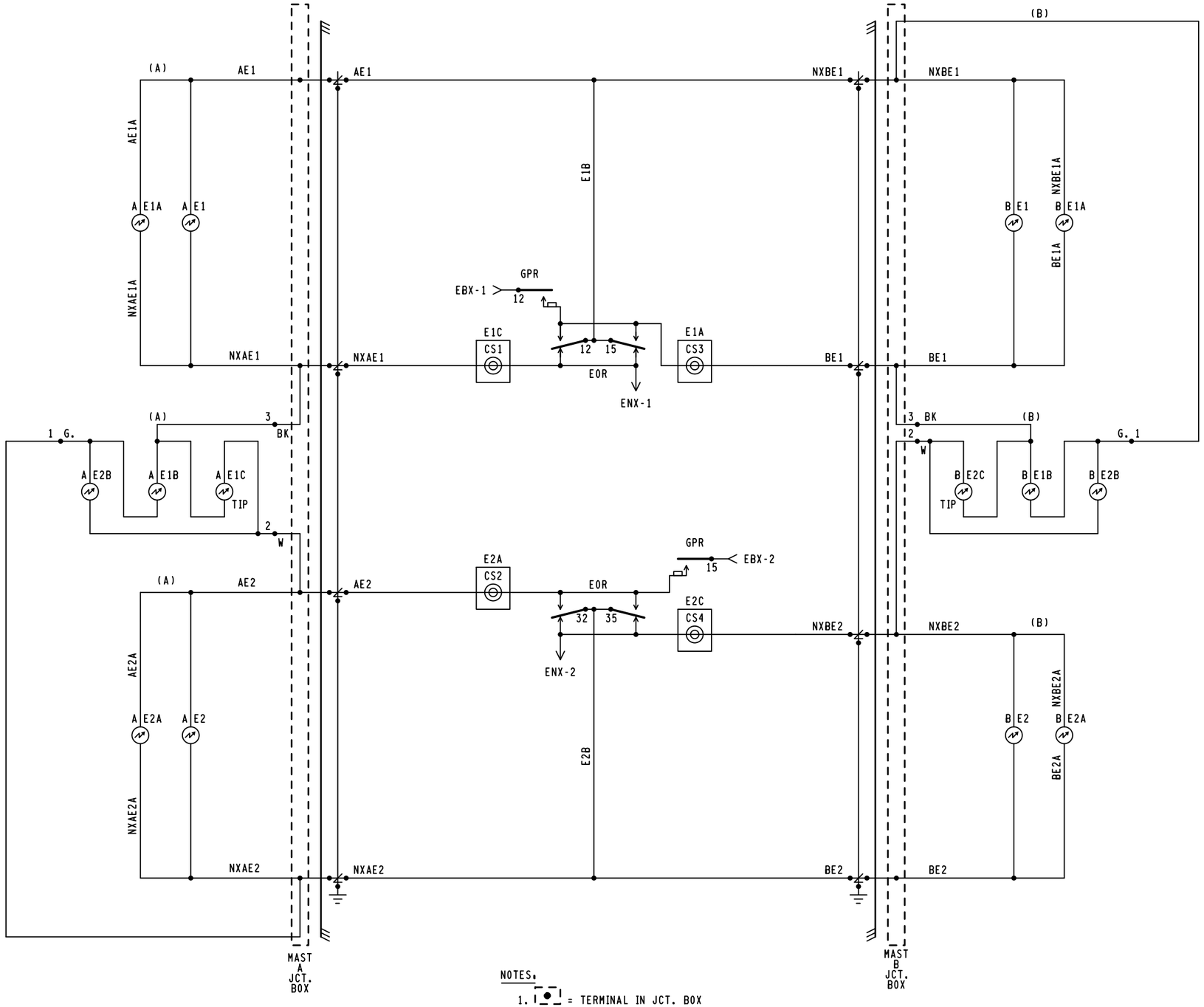

NOTES:

1. = TERMINAL IN JCT. BOX
2. WHEN 7 OR MORE LIGHTS ON A SINGLE STRUCTURE REFER TO SS-382 FOR REQUIRED ARRESTER RATING.

NEW WORK

invensys Rail

PROJ #: IL2012015
PROJ #: IL2012016
DES BY: S. SPENCE
CHK BY: D. ALBRIGHT
DATE: 05-02-12

CSX TRANSPORTATION

RAIL TRANSPORT GROUP ENGINEERING
COMMUNICATIONS AND SIGNALS

T.R. 62 (430TH ST.) 546357A

CROSSING WARNING DEVICE LIGHT CIRCUITRY
CASEY, IL M.P. QS-104.60

PMD3RCPML.C04
REV. 09-30-10

DESIGNED	DIGITIZED	CHECKED	DATE
IRC/SWS	IRC/SWS	IRC/DBA	05-02-12

DESIGN DATE	REV. NO.	DRAWING	SHEET NO	FILE	SHEET
05-02-12	1	-----	-----	QS10460	C04

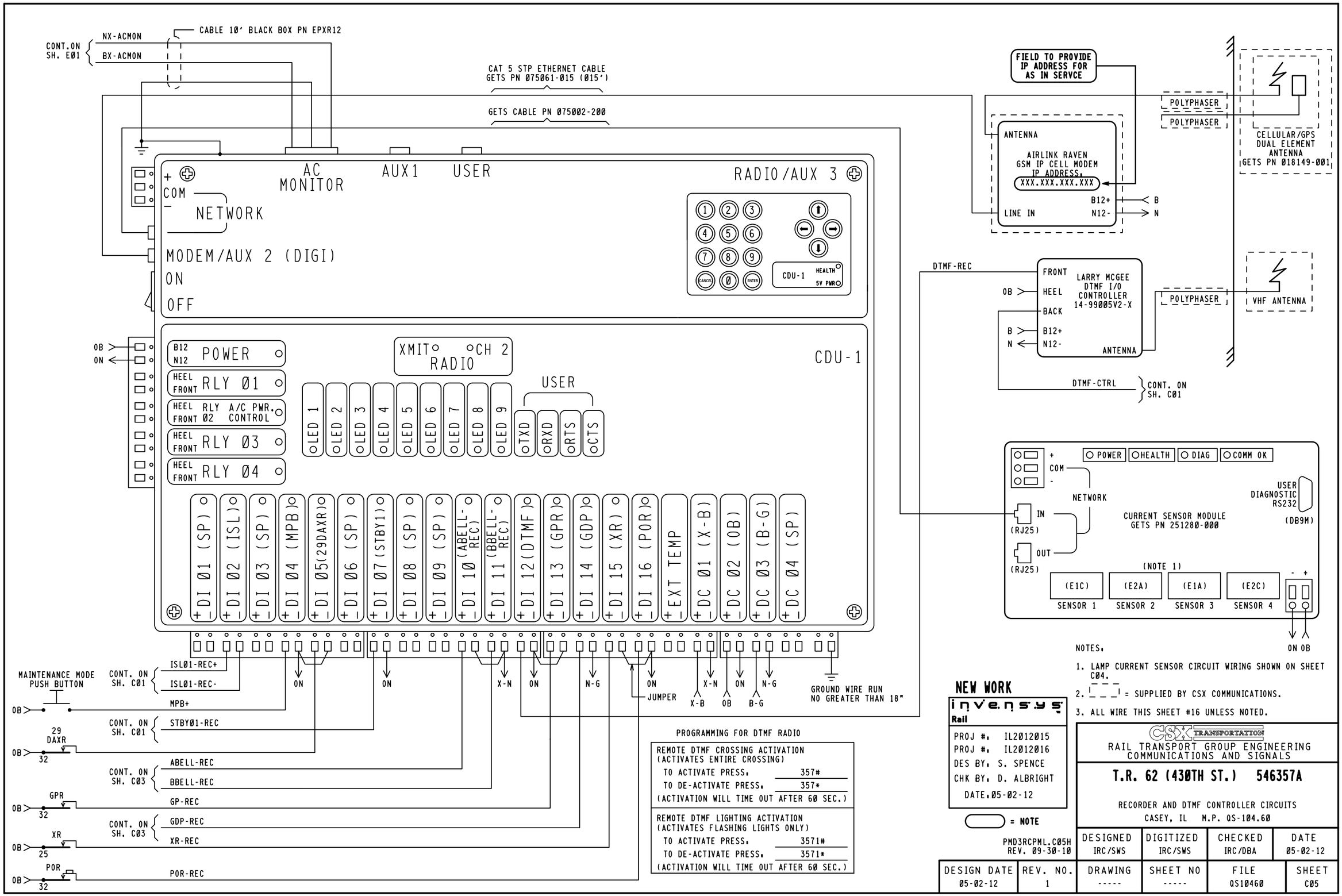

PROGRAMMING FOR DTMF RADIO

REMOTE DTMF CROSSING ACTIVATION (ACTIVATES ENTIRE CROSSING)	
TO ACTIVATE PRESS.	357#
TO DE-ACTIVATE PRESS.	357*
(ACTIVATION WILL TIME OUT AFTER 60 SEC.)	
REMOTE DTMF LIGHTING ACTIVATION (ACTIVATES FLASHING LIGHTS ONLY)	
TO ACTIVATE PRESS.	3571#
TO DE-ACTIVATE PRESS.	3571*
(ACTIVATION WILL TIME OUT AFTER 60 SEC.)	

NOTES.

1. LAMP CURRENT SENSOR CIRCUIT WIRING SHOWN ON SHEET C04.
2. _ _ _ _ = SUPPLIED BY CSX COMMUNICATIONS.
3. ALL WIRE THIS SHEET #16 UNLESS NOTED.

NEW WORK

invensys Rail

PROJ #. IL2012015
PROJ #. IL2012016
DES BY. S. SPENCE
CHK BY. D. ALBRIGHT
DATE.05-02-12

= NOTE

PMD3RCPML.C05H
REV. 09-30-10

CSX TRANSPORTATION
RAIL TRANSPORT GROUP ENGINEERING
COMMUNICATIONS AND SIGNALS

T.R. 62 (430TH ST.) 546357A

RECORDER AND DTMF CONTROLLER CIRCUITS
CASEY, IL M.P. QS-104.60

DESIGNED	DIGITIZED	CHECKED	DATE
IRC/SWS	IRC/SWS	IRC/DBA	05-02-12

DESIGN DATE	REV. NO.	DRAWING	SHEET NO	FILE	SHEET
05-02-12	1	-----	-----	QS10460	C05

	DEFAULTS AND/OR STYLE	FIELD RECORD
EVENT ANALYZER EXECUTIVE PROGRAM	VERSION 2.7, COMPILED ON NOV. 11, 2003	VERSION ____, COMPILED ON _____ (FIELD TO ENTER)
CSXT USER PROGRAM (IF LOADED)	VERSION 1.01, COMPILED ON 12-01-03 (MM-DD-YY)	VERSION _____, COMPILED ON _____ (FIELD TO ENTER)
SYSTEM SETTINGS		
DATE & TIME (ENABLE DAYLIGHT SAVINGS TIME = Y (YES)	MM-DD-YY 23:01:59	n/a
MILE POST	XYZ-789.01	QS-104.60
SITE NAME	MAIN ST (SR-17,US-1)	T.R. 62 (430TH ST.)
DOT NUMBER	123456A	546357A

NOTE TO INSPECTOR: AT IN SERVICE OF EVENT ANALYZER OR UPDATE OF ITS INTERNAL EXECUTIVE PROGRAM OR ITS CSXT USER PROGRAM, THE VERSION NUMBER AND COMPILE DATES OF EACH PROGRAM MUST BE INSERTED IN THE BLANK FIELDS.

EVENT ANALYZER ETHERNET PORT SETUP	
	IP ADDRESS
ETHERNET DIAGNOSTIC PORT (TOP)	192.168.13.2
ETHERNET REMOTE PORT (BOTTOM)	192.168.13.1

BATTERY INPUTS	DC 01	DC 02	DC 03	DC 04
CHANNEL	1	2	3	4
BATTERY CHANNEL NAMES	X-B BULB BATTERY	OB ELECTRONIC BATTERY	B-G GATE BATTERY	SPARE
BATTERY CHANNEL I.D.	X-B	OB	B-G	SP
SAMPLE PERIOD	500 ms	500 ms	500 ms	10,000 ms
RESOLUTION	00.2 V	00.2 V	01.0 V	02.0 V

MODULE-DIGITAL 4 QUAD CURRENT SENSOR SERIAL NUMBER: [_____] (BLANK UNTIL AIS RECEIVED)				
RESOLUTION (AMPS RMS) : [00.2] ARMS				
AUTOMATICALLY ALLOCATED DIGITAL INPUT	DI 17	DI 18	D1 19	D1 20
DIGITAL 4 QUAD CURRENT SENSOR	1	2	3	4
NAME	E1C	E2A	E1A	E2C
ID	E1C	E2A	E1A	E2C
LIT BULB COUNT ON EACH CIRCUIT	4	4	4	4
CURRENT READING IN AMPS AT APPROXIMATE 10.0 VOLTS BULB VOLTAGE	2.6	2.6	2.6	2.6

DIGITAL INPUTS	DI 01	DI 02	DI 03	DI 04	DI 05
CHANNEL	1	2	3	4	5
NAME		ISLAND TRACK 1		MAINTENANCE PB	60DAXR
ID	SP	ISL	SP	MPB	60DAXR
ON NAME		ISL 1 UP		MAINTENANCE PB HI	60DAXR UP
OFF NAME		ISL 1 DN		MAINTENANCE PB LOW	60DAXR DN
ON DEBOUNCE TIME	1000 ms	100 ms	1000 ms	100 ms	100 ms
OFF DEBOUNCE TIME	1000 ms	100 ms	1000 ms	100 ms	100 ms
TOGGLE PERIOD	500 ms	500 ms	500 ms	500 ms	500 ms

CHANNEL	1	2	3	4
NAME	RELAY OUTPUT 01	RELAY OUTPUT 02	RELAY OUTPUT 03	RELAY OUTPUT 04
I.D.	RLY01	RLY02	RLY03	RLY04
ON NAME	ON	ON	ON	ON
OFF NAME	OFF	OFF	OFF	OFF
PULSE DURATION	1000 ms	1000 ms	1000 ms	1000 ms

DIGITAL INPUTS	DI 06	DI 07	DI 08	DI 09	DI 10
CHANNEL	6	7	8	9	10
NAME		STANDBY 1			ABELL REC
ID	SP	STBY 1	SP	SP	ABELL-REC
ON NAME		STANDBY UNIT			ABELL RINGING
OFF NAME		PRIMARY UNIT			ABELL NOT RINGING
ON DEBOUNCE TIME	1000 ms	100 ms	1000 ms	1000 ms	100 ms
OFF DEBOUNCE TIME	1000 ms	100 ms	1000 ms	1000 ms	100 ms
TOGGLE PERIOD	500 ms	500 ms	500 ms	500 ms	500 ms

PORT	USER	AUX 1	MODEM/AUX 2
BAUD RATE	38400	9600	9600
PARITY	N	N	N
DATA BITS	8	8	8
STOP BITS	1	1	1
FLOW CONTROL	NONE	NONE	NONE

DIGITAL INPUTS	DI 11	DI 12	DI 13	DI 14	DI 15	DI 16
CHANNEL	11	12	13	14	15	16
NAME	BBELL REC	DTMF/TEST	GATE VERTICAL	GATE HORIZONTAL	XR	AC POWER OFF
ID	BBELL-REC	DTMF	GP	GDP	XR	POR
ON NAME	BBELL RINGING	DTMF TEST ON	GATE VERTICAL	GATE HORIZONTAL	XR UP	AC POWER ON
OFF NAME	BBELL NOT RINGING	DTMF TEST OFF	GATE NOT VERTICAL	GATE NOT HORIZONTAL	XR DN	AC POWER OFF
ON DEBOUNCE TIME	100 ms	100 ms	100 ms	100 ms	100 ms	100 ms
OFF DEBOUNCE TIME	100 ms	100 ms	100 ms	100 ms	100 ms	100 ms
TOGGLE PERIOD	500 ms	500 ms	500 ms	500 ms	500 ms	500 ms

NEW WORK

invensys Rail

PROJ #: IL2012015
PROJ #: IL2012016
DES BY: S. SPENCE
CHK BY: D. ALBRIGHT
DATE: 05-02-12

= NOTE

PMD3RCPML.C06
REV. 01-08-10

CSX TRANSPORTATION
RAIL TRANSPORT GROUP ENGINEERING
COMMUNICATIONS AND SIGNALS

T.R. 62 (430TH ST.) 546357A

RECORDER PROGRAM
CASEY, IL M.P. QS-104.60

DESIGNED	DIGITIZED	CHECKED	DATE
IRC/SWS	IRC/SWS	IRC/DBA	05-02-12

DESIGN DATE	REV. NO.	DRAWING	SHEET NO	FILE	SHEET
05-02-12	1	-----	-----	QS10460	C06