STATE OF ILLINOIS

ILLINOIS COMMERCE COMMISSION

Petition for permission to make a major change in crossing protection, or to install new protection under 92 Illinois Administrative Code 1535.400 (d).

Date: September 22, 2011

To the **ILLINOIS COMMERCE COMMISSION:**

The petitioner Norfolk Southern Railway Company shows

(1) That it is a railroad company operating a line of railroad in the State of Illinois.

(2) That petitioner proposes and hereby makes application for authority to make a major change in crossing protection, or to install new protection, under 92 Illinois Administrative Code 1535.400 (d) adopted by this Commission.

(3) That the location of the crossing, nature of protection now established and proposed to be established, and other pertinent facts in connection therewith, are set forth in the statement attached to and forming part of this petition.

(4) That petitioner's reasons and purpose, with reference to its said proposal are to:

Modification of Grade Crossing Warning Devices requested by Illinois Commerce Commission

at: Pelican Rd, in Bartelso, Clinton County, Illinois, DOT: 724669Y, MP. 50.38-W

File No. CX0124156 Project No. 04.0669

(5) That the facts set forth in this petition and in the statement and plans or plats attached thereto, are, all of them, true and correct to the best of petitioner's knowledge and belief.

WHEREFORE, the petitioner prays that the Commission will, if deemed desirable by the Commission, set the aforesaid matter for hearing, and that the Commission enter an order or adopt at resolution consenting to and granting authority for the making of the said proposed changes in or additions to crossing protection.

Norfolk Southern Railway Company

By

C.J. Wimberly, Administrator
Highway Grade Crossings

Thomas W. Ambler
(Attorney for Petitioner)

Norfolk Southern Corporation
Three Commercial Place
Norfolk, VA 23510-2191

(Attorney's Address)

Statement, attached to and part of an application for permission to make a major change in crossing protection or to install new protection, under 92 Illinois Administrative Code 1535.400(d).

1. Name of Railroad Company Norfolk Southern Railway Company
2. Crossing Number 724669Y
3. Village or City Bartelso
4. Name of Street or Highway Pelican Rd.
5. Public Agency Maintaining Highway City
6. Protection now established:

   Xbucks only.
7. Protection desired:

   Modify grade crossing warning devices, to include flashing lights with gates and bell controlled by constant warning time detection equipment.
8. Number of main tracks One Other tracks None
9. Number of passenger movements:

   6 a.m. to 6 p.m. None 6 p.m. to 6 a.m. None
10. Number of freight train movements:

    6 a.m. to 6 p.m. Eight 6 p.m. to 6 a.m. Seven
11. Approximate number of switch movements:

    6 a.m. to 6 p.m. None 6 p.m. to 6 a.m. None
12. Maximum speed of trains at crossing on each track in each direction:

    East/West 60 M.P.H Main
13. Passenger platforms served by tracks within the limits of track circuits, if any None

14. Where automatic signals or gates are proposed, approximate number of train or engine movements daily which would cause false indications or operation:

None

15. Nature and approximate amount of street or highway traffic over crossing:

75 AADT

16. In addition to the information listed hereinbefore in Form 3, attach a track plan or plat of the proposed crossing. This plan should show:

(a) Width and surface of highway.

(b) Highway intersections (including private driveways to be so indicated) and location of established highway signs or signals within 100 feet of crossing.

(c) Location of tracks, switches and other railroad facilities such as block signals, etc. within limits of track circuits, present and/or proposed.

(d) Where automatic protection is proposed, show proposed location of signals (side lights, cantilevers, etc., if any).

(e) Show the length of each operating track section within the control limits of the crossing protection and its function.

ADDITIONAL INFORMATION

Drawing attached for question no. 16

(File Original and Two Duplicates)

VERIFICATION

I, C.J. Wimberly, first being duly sworn upon oath depose and say that I am Administrator – Highway Grade Crossings, of Norfolk Southern Railway Company, a Virginia corporation; that I have read the above and foregoing petition by me subscribed and know the contents thereof; that said contents are true in substance and in fact, except as to those matters stated upon information and belief, and as to those, I believe same to be true.

Administrator - Highway Grade Crossings

Subscribed and sworn to before me this 22 nd.

day of September, 20 11.

Notary Public (Georgia) or Witness

My Commission Expires: _____

22-Sep-11

Detailed Estimate for Grade Crossing Warning Devices

City/State: BARTELSO , IL
MilePost: 50.38-W
State Proj. No.:
S&E Proj. No.: 04.0669
Man Days: 104

Road: PELICAN RD (TR 135)
DOT/AAR: 724669Y
County: CLINTON
File Number:

*****Purchases - Others*****		
Meals and Lodging:	$13,977.60	
Rental of Equipment:	$14,560.00	
(2 Trucks, 1 Backhoe w/ Trailer and 1 Pipe-Pusher for 26 Days)		
Construction Supervision Vehicle:	$2,601.81	
Purchases - Other Total:		$31,139.41
*****Material And Additives*****		
Material Cost:	$96,011.00	
Sales and Use Tax:	$4,801.00	
Material Handling Freight:	$4,800.54	
Material Total:		$105,612.54
*****Labor And Additives*****		
Labor Cost:	$29,120.00	
(4 man crew at $1,120.00 a day for: 26 days)		
Payroll Tax & Overheads:	$38,683.01	
Preliminary Engineering:	$11,011.51	
Construction Supervision:	$8,220.58	
Labor Total:		$87,035.10
	Project Cost:	$223,787.05
	Scrap / Salvage Credit:	$0.00
	Project Total:	**$223,787.00**

Estimated on: 22-Sep-11

Estimated by: ndr3j

Estimate valid for 1 year from date of estimate

Norfolk Southern Railway

Highway Crossing Signalization Program - Material List

Do not substitute items without permission from S & E Engineering

City:	BARTELSO
Road:	PELICAN RD (TR 135)
Mile Post:	50.38-W
Drawing Number:	SE9167P
State ProjectNumber:	
County:	CLINTON
A A R Number:	724669Y
Project Number:	04.0669
File Number:	
New File Number:	CX0124156
A F E Number:	F33332
Store Number:	09164
Supervisor:	C. PRATTS
Tax Code:	

Vendor to supply the following copies after pricing:

1 Set - Material Management with original Invoice
2 Sets - with plans shipped in car with material
1 Set - S&EGen. Supt. Construction w/copy of invoice

Location: BARTELSO IL S&E Proj. No.: 04.0669 AFE No.: F33332 Drawing No.: SE9167P

Store No.: 09164 P.O.Number: Date Required: Date Shipped: Vendor: Railroad Signal Design

Qty.	Class-Item-CD	UI	Price per Item	Total Price	Item Description	Quantity Shipped	Quantity Installed Date Quan.	Date Quan.	Date Quan.	Quantity Returned (Credit)	Special Instructions
3	670-360693-4	EA	$5.52	$16.56	AAR/DOT NUMBER PLATE/DECAL, ORDER 3 PER PROJECT. 60 DAY LEAD TIME. SUPPLIED BY S'TRAN.						
1	165-006505-4	EA	$1,075.23	$1,075.23	AC SERVICE, COMPLETE LESS METER BASE, ASSEMBLED ON 30' POLE						
13	105-288384-4	EA	$276.34	$3,592.42	BATTERY,GNB 368AH MODEL 50G15 SINGLE CELL 2.25 VOLTS, FOR USE WITH CROSSINGS DESIGNED AFTER 09/09						
1	001-000011-4	EA	$5,000.00	$5,000.00	BERM WALL						
2	670-980689-4	EA	$75.48	$150.96	BRACKET HIGH WIND, (RIGID 3'), WIG- 191036, WALRUS TUSK TYPE						
2	670-561375-4	EA	$1,208.79	$2,417.58	BRACKET, GATE SAVER, NEG385102GS, SPRING LOADED SWING AWAY ADAPTER FOR FIBERGLASS/ALUMINUM GATES, USE WITH GATE 38' AND LESS						
1	670-356949-4	EA	$90.00	$90.00	CABLE, 10' GENERATOR HOOK UP, SERRMI P/N 40524. FEMALE CONNECTOR						
350	465-939422-4	LF	$3.17	$1,109.50	CABLE, UG 12 CONDUCTOR NO 14 AWG SOLID EACH CONDUCTOR WITH 5/64 IN INSULATION 10 MIL						
350	465-292862-4	LF	$1.54	$539.00	CABLE, UG 2-6 TWISTED, S-23 OKONITE 113-12-3933 SOLID TINNED CONDUCTOR						
350	465-292929-4	LF	$4.64	$1,624.00	CABLE, UG 5 COND. NO. 6 AWG SOLID COPPER CABLE TO MEET NS CORP. SPEC. FOR SIGNAL						
350	465-791835-4	FT	$3.93	$1,375.50	CABLE, UG AC ENTRANCE 3C#6-7X OKONITE FMPF-L 094-078 TR W/G 1 X 8 7X W010 BRZ TAPE 600V PRODUCT CODE 206-11-6070						
100	165-544477-4	FT	$2.11	$211.00	CONDUIT, 4"x10' PVC, SCHEDULE 80 BELL CONNECTOR AT ONE END, 1/2 PT. GLUE IN KIT 670-123298-4						
2	670-664917-4	EA	$80.28	$160.56	CONNECTOR KIT, WELDED FAR RAIL, CONSISTING OF RUBBER HOSE PROPERLY DRILLED, BONDSTRAND, 1 SPLICING SLEEVE, 1 REDUCING SLEEVE, 3 CLAMPS, 1 TRACK CLIP, 1 WEB WELDED TRACK CONNECTOR, 1 WELD METAL, SAFETRAN 111359-2X						
2	670-632520-4	EA	$70.94	$141.88	CONNECTOR KIT, WELDED NEAR RAIL, CONSISTING OF, RUBBER HOSE PROPERLY DRILLED, BONDSTRAND, SPLICING SLEEVE, 1 REDUCING SLEEVE, 5 CLAMPS, 1 TRACK CLIP, 1 WEB WELDED TRACK CONNECTOR, 1 WELD METAL, SAFETRAN 111359-1X						

APPROVED BY STATE	APPROVED BY RAILROAD	CAR NUMBER	SEAL NUMBER

Location: BARTELSO IL S&E Proj. No.: 04.0669 AFE No.: F33332 Drawing No.: SE9167P

Store No.: 09164 P.O.Number: Date Required: Date Shipped: Vendor: Railroad Signal Design

Qty.	Class-Item-CD	UI	Price per Item	Total Price	Item Description	Quantity Shipped	Quantity Installed Date Quan.	Date Quan.	Date Quan.	Quantity Returned (Credit)	Special Instructions
2	670-793404-4	EA	$1,159.00	$2,318.00	COUNTERWEIGHT PKAGE, 17-24'GATE S'TRAN S- MECH ONLY, STAINLESS, TO INCLUDE HUB, SUPPORT ARMS						
4	670-760012-4	EA	$40.40	$161.60	COVER, FOR 1 WAY FLASHING LIGHT ASSY. 18 OZ. BLACK VINYL COATED NYLON. ====TO COVER 2 LAMPS====						
1	670-986650-4	EA	$341.80	$341.80	DISPOSAL, CONSTRUCTION DEBRIS AND CLEANING X'ING EQUIPMENT CONTAINER						
1	670-000004-4	EA	$700.00	$700.00	FCC LICENSE FOR MONITOR/RADIO						
15	670-000003-4	EA	$255.85	$3,837.75	FILL/STONE #57, QUANITY IS BASED ON TRUCK LOAD PLUS DELIVERY COST						
2	670-015231-4	EA	$594.49	$1,188.98	FOUNDATION, DIXIE,S-2 GATE 2'6"X2'6"X5'6" ASSEMBLED						
2	670-257031-4	EA	$421.88	$843.76	GATE ARM, FIBERGLASS-ALUMINUM, 17-24 FT, INCLUDES GATE GUARD FOR GATE LIGHT CABLE. HIGH INTENSITY VERTICAL STRIPES. NEG P/N 8003-244NFS/CG, SSC T18115						
1	670-675667-4	EA	$30,186.85	$30,186.85	GCP 4000 1 TRK, REDUNDANT, (2TRK CHASSIS), WIRED RACK EQUIPMENT FOR 6X8 FARADAY, 2 EA SSCCIIII, 2 EA 40 AMP CRAIG CHARGER, WITH SEAR III, SAFETRAN 003131-1X						
1	670-477991-4	EA	$410.00	$410.00	KIT, GROUNDING ASSY FOR AL I/S INCLUDES 8 GRD RDS,200'#4WIRE,12 4 WIRE ONE-SHOTS. ERICO SBK206						
1	670-123298-4	EA	$336.04	$336.04	KIT, HARDWARE SUPPLIES REQUIRED X'ING P'CKAGES. WEB CONNECTORS FOR SHUNT(8EA) TAPE, AMPS,P'GUM PAINT,SLEEVES,TAGS,GLUE, 100 EA WHITE TAGS,)NE CAN BLUE MARKING PAINT ETC...						
2	670-764166-4	EA	$1,240.19	$2,480.38	LAMP ASSY, 5" MAST MTG. 2W IND. 20" BKGRD, FLX-12 W/BULB S'TRAN #042003-487XNS						
6	165-643547-4	EA	$5.75	$34.50	LAMP, 18 WATT 10 VOLT S-11 SC BAY 18S11/1SC CLEAR RWY SIGNAL UJ-71463 GE						
4	255-590880-4	EA	$17.57	$70.28	LOCK, AMERICAN LOCK MODEL H-10KA KEYED ALIKE TO PRIVATE KEYWAY D456 AND STAMPED "NS SIG"						
2	670-637778-4	EA	$1,265.30	$2,530.60	MAST, 5" ALUMINUM 13'10" WITH DOUBLE JCT. BOX BASE. S'TRAN P# 070519-11AX.						
2	670-850933-4	EA	$3,925.06	$7,850.12	MECHANISM, GATE MODEL S-60, WITH DEFROSTER AND MINI TRACKSIDE SENSOR S'TRAN # 0740007-X002B3						
1	670-000001-4	EA	$726.23	$726.23	MISC. EXPENSE, MATERAIL/FILL						

APPROVED BY STATE	APPROVED BY RAILROAD	CAR NUMBER	SEAL NUMBER

Location: BARTELSO IL S&E Proj. No.: 04.0669 AFE No.: F33332 Drawing No.: SE9167P

Store No.: 09164 P.O.Number: Date Required: Date Shipped: Vendor: Railroad Signal Design

Qty.	Class-Item-CD	UI	Price per Item	Total Price	Item Description	Quantity Shipped	Quantity Installed Date Quan.	Date Quan.	Date Quan.	Quantity Returned (Credit)	Special Instructions
2	670-001347-4	EA	$57.10	$114.20	PACKAGE, HARDWARE SIGN 5 IN. MOUNTING, SERRMI A1250-5, HARMON @200965-000, OR						
1	255-646807-4	EA	$31.19	$31.19	PADLOCK, SAFETRAN PART NO. 030399-29X SCREW TYPE FOR CIR CONTROLLER AND BTY. BOX						
1	670-514605-4	EA	$11.11	$11.11	PINNACLE, W-C SECT 1-11, 4"& 5" REF K1 110-8 OR SAFETRAN NO. @035045-503X						
1	670-000013-4	EA	$10,234.00	$10,234.00	POLELINE CONSTRUCTION BY LOCAL POWER COMPANY FOR SERVICE						
1	165-902002-4	EA	$303.43	$303.43	PROTECTOR, SURGE 120/240VAC, ERICO P/N EPD120/240TDFL						
4	465-002899-4	EA	$39.71	$158.84	REEL, CABLE DISPOSABLE FOR CROSSING SIGNAL PACKAGES						
2	435-805560-4	EA	$2.83	$5.66	SAND, 25LB BAG FOR CABLE ENTRANCE INTO THE SHELTER						
1	670-027556-4	EA	$2,629.77	$2,629.77	SEARIIi, ACCESSORY PACKAGE, W/2-ILOD, 1-E-BELL, 2-GTS, 1-GFT, 1-VHFC, WITHOUT MTSS/SEAR UNIT						
1	670-749325-4	EA	$226.97	$226.97	SHELF, FOLDING, FOR LAPTOP USE IN FARADAY 6X8 SHELTER, SAFETRAN 052852-128X						
1	670-755523-4	EA	$9,383.92	$9,383.92	SHELTER, 6'X8' ALUMN FARADAY W/CABLE CHUTES BEHIND TERMINAL BOARD, W/1EA EQUIPMENT RACK, W/GEN RECEPTICAL, BREAKER BOX GFI OUTLET FOR LAPTOP SHELF SAFETRAN 058400-68-85						
2	670-586967-4	EA	$41.70	$83.40	SHUNT COVER W/LAG SCREWS, 19"X19", SERRMI #40271, ORDER 1 PER SHUNT						
2	670-652773-4	EA	$460.98	$921.96	SHUNT, MULTI-FREQ. #62775-1543 SAFETRAN NARROW BAND						
2	670-393331-4	EA	$37.43	$74.86	SIGN CROSSING MALFUNCTION ASSEMBLY FOR 4" AND 5" MAST, SAFETRAN #T17215						
2	670-016346-4	EA	$146.32	$292.64	SIGN, X-BUCK, HI-INTENSIVE REFLECTIVE FRT. & BACK FOR ALL STATES, SAFETRAN# 035200-91X						
1	670-330382-4	RL	$17.81	$17.81	TAPE, THOR 3" DURATEC, ORANGE 1000' LENGTHS. "WARNING STOP DIGGING"						

Total Material: $96,010.84

APPROVED BY STATE	APPROVED BY RAILROAD	CAR NUMBER	SEAL NUMBER

SH. NO.	CONTENTS
NX1	INDEX SHEET
1	LAYOUT
2	PROFILE
3	CABLE PLAN
4	LOAD CENTER
5	RECTIFIER & BATTERY
6	4000 GCP 2-TK CHASSIS & MODULE LAYOUT
7	4000 GCP PROGRAMMING SETUP
8	4000 GCP PROGRAMMING SETUP
9	CONNECTORS FOR TRACK MODULES
10	CPU MODULE,SEAR III, GFT & VHF HOOK-UPS
11	SEAR III PROGRAMMING SETUP
12	SSCC#1 MODULE, ILOD#1 HOOK-UP
13	SSCC#2 MODULE, ILOD#2 HOOK-UP
14	FLASHER AND GATE LIGHTS - A
15	FLASHER AND GATE LIGHTS - B
16	BACKBOARD 1A & 1B
17	REAR BACKBOARD 1A & 1B
18	FARADAY SHIELD 1A & 1B
19	FARADAY SHIELD 1C
20	HOUSE SIDE C LAYOUT
21	HOUSE SIDE A LAYOUT
22	HOUSE SIDE B & TOP VIEW LAYOUT

IN SERVICE _____ _____
SIGNED DATE

☐ S&E ENGINEERING COPY
☐ CONSTRUCTION OFFICE COPY
RETURN TO S&E ENG. AFTER COMPLETION
☐ FIELD COPY
RETURN TO CASE AFTER COMPLETION
☐ PROJECT ENGINEER COPY

INDEX SHEET 1

DESIGNED BY: TAH 09-01-11	NORFOLK SOUTHERN		
DRAWN BY: RSD 09-01-11	OFFICE OF ASS'T. VICE PRESIDENT COMM. & SIGNAL, ATLANTA, GA.	M.P.:	50.38W
CHECKED BY: SAH 09-01-11	BARTELSO, IL GATES/FLS AT CR1700E (PELICAN RD.)		
	PROFILE 7C	FILE No.	R-
IN SERVICE: - -	CADD or DWG. No. SE9167P.NX1	SHEET No.	1 of 1

REVISION INITIALS

PROPERTY
NORFOLK SOUTHERN RAILWAY CO.

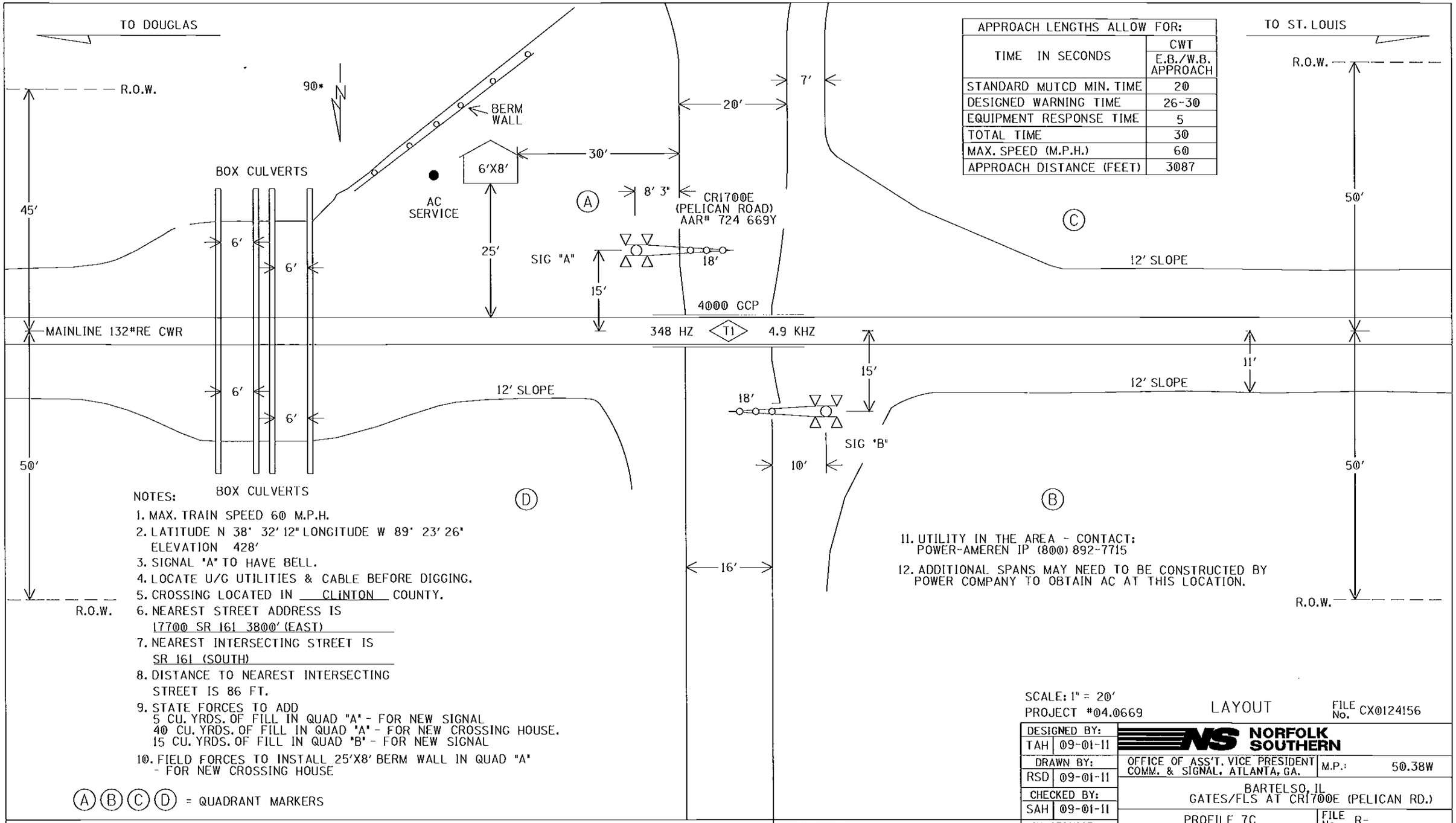

APPROACH LENGTHS ALLOW FOR:	
TIME IN SECONDS	CWT E.B./W.B. APPROACH
STANDARD MUTCD MIN. TIME	20
DESIGNED WARNING TIME	26-30
EQUIPMENT RESPONSE TIME	5
TOTAL TIME	30
MAX. SPEED (M.P.H.)	60
APPROACH DISTANCE (FEET)	3087

NOTES:

1. MAX. TRAIN SPEED 60 M.P.H.
2. LATITUDE N 38° 32' 12" LONGITUDE W 89° 23' 26"
   ELEVATION 428'
3. SIGNAL "A" TO HAVE BELL.
4. LOCATE U/G UTILITIES & CABLE BEFORE DIGGING.
5. CROSSING LOCATED IN CLINTON COUNTY.
6. NEAREST STREET ADDRESS IS
   17700 SR 161 3800' (EAST)
7. NEAREST INTERSECTING STREET IS
   SR 161 (SOUTH)
8. DISTANCE TO NEAREST INTERSECTING
   STREET IS 86 FT.
9. STATE FORCES TO ADD
   5 CU. YRDS. OF FILL IN QUAD "A" - FOR NEW SIGNAL
   40 CU. YRDS. OF FILL IN QUAD "A" - FOR NEW CROSSING HOUSE.
   15 CU. YRDS. OF FILL IN QUAD "B" - FOR NEW SIGNAL
10. FIELD FORCES TO INSTALL 25'X8' BERM WALL IN QUAD "A"
    - FOR NEW CROSSING HOUSE
11. UTILITY IN THE AREA - CONTACT:
    POWER-AMEREN IP (800) 892-7715
12. ADDITIONAL SPANS MAY NEED TO BE CONSTRUCTED BY
    POWER COMPANY TO OBTAIN AC AT THIS LOCATION.

(A) (B) (C) (D) = QUADRANT MARKERS

SCALE: 1" = 20'
PROJECT #04.0669

LAYOUT

FILE No. CX0124156

DESIGNED BY:	
TAH	09-01-11
DRAWN BY:	
RSD	09-01-11
CHECKED BY:	
SAH	09-01-11
IN SERVICE:	
	- -

NORFOLK SOUTHERN

OFFICE OF ASS'T. VICE PRESIDENT COMM. & SIGNAL, ATLANTA, GA.

M.P.: 50.38W

BARTELSO, IL
GATES/FLS AT CR1700E (PELICAN RD.)

PROFILE 7C

FILE No. R-

CADD or DWG. No. SE9167P.01

SHEET No. 1 of 22

REVISION INITIALS

PROPERTY
NORFOLK SOUTHERN RAILWAY CO.

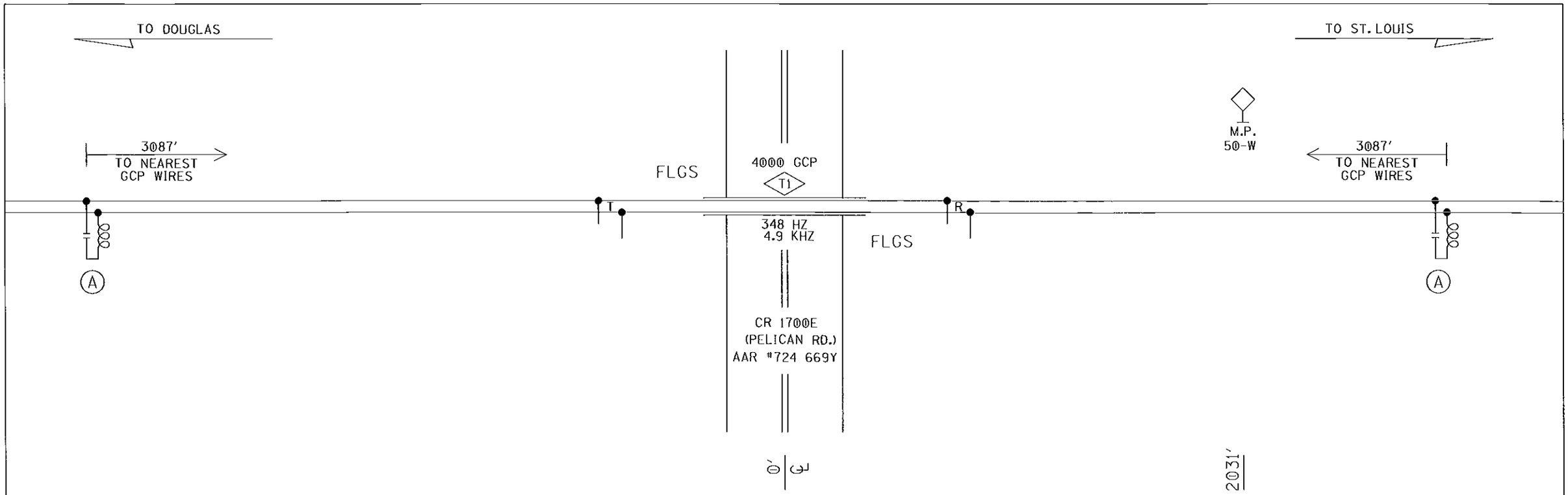

(A)- MF-NBS 62775-1543 (348HZ)

PROFILE

DESIGNED BY: TAH 09-01-11	NORFOLK SOUTHERN		
DRAWN BY: RSD 09-01-11	OFFICE OF ASS'T. VICE PRESIDENT COMM. & SIGNAL, ATLANTA, GA.	M.P.:	50.38W
CHECKED BY: SAH 09-01-11	BARTELSO, IL GATES/FLS AT CR1700E (PELICAN RD.)		
IN SERVICE: - -	PROFILE 7C	FILE No.	R-
	CADD or DWG. No. SE9167P.02	SHEET No.	2 of 22

REVISION INITIALS

PROPERTY
NORFOLK SOUTHERN RAILWAY CO.

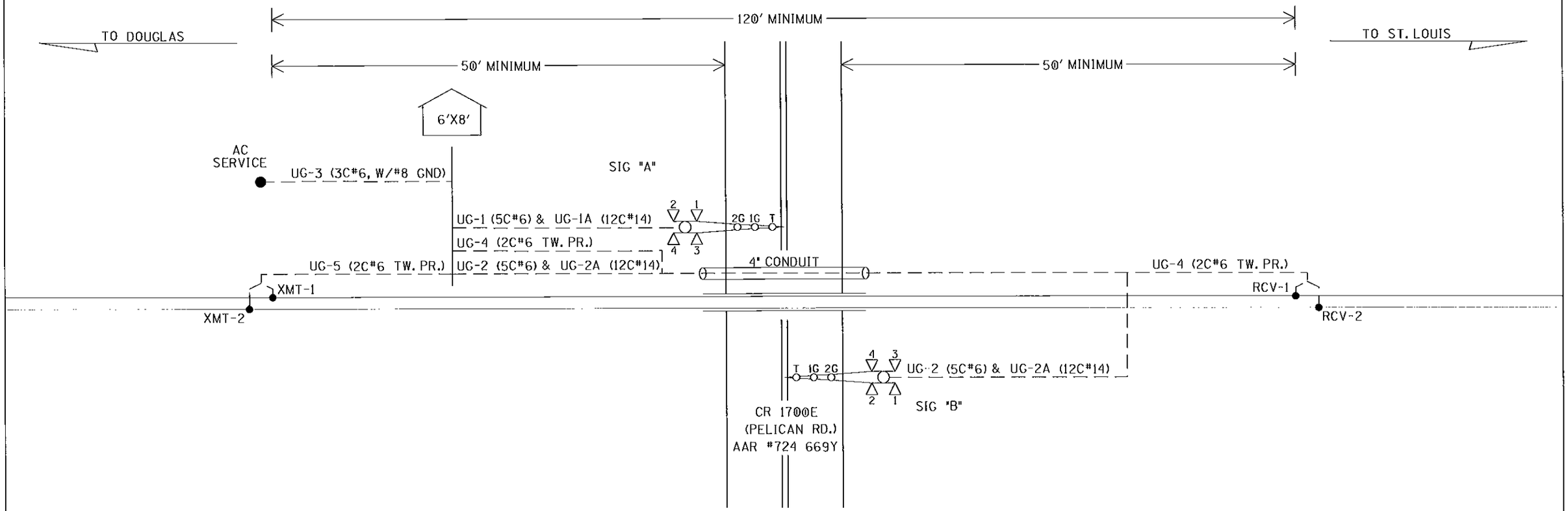

UG-1-5CUG #6
AEC
AEZ
AEB
B16-A
N16-A

UG-2-5CUG #6
BEC
BEZ
BEB
B16-B
N16-B

UG-1A-12CUG #14
AXG
NAXG
AXX
1AXX
XGP1
AMTSS
AGD
AGBX120
AGNX120
SPARE
SPARE
SPARE

UG-2A-12CUG #14
BXG
NBXG
BXX
1BXX
XGP1
XGP
BMTSS
BGD
BGBX120
BGNX120
SPARE
SPARE

UG-3-3CUG #6 W/#8 GND
BX120-A
BX120-B
NX120
GND

UG-4-TW. PR. #6
RCV-1
RCV-2

UG-5-TW. PR. #6
XMT-1
XMT-2

CABLE PLAN

DESIGNED BY: TAH 09-01-11	NORFOLK SOUTHERN		
DRAWN BY: RSD 09-01-11	OFFICE OF ASS'T. VICE PRESIDENT COMM. & SIGNAL, ATLANTA, GA.	M.P.:	50.38W
CHECKED BY: SAH 09-01-11	BARTELSO, IL GATES/FLS AT CR1700E (PELICAN RD.)		
	PROFILE 7C	FILE No.	R-
IN SERVICE: - -	CADD or DWG. No. SE9167P.03	SHEET No.	3 of 22

REVISION INITIALS										

PROPERTY
NORFOLK SOUTHERN RAILWAY CO.

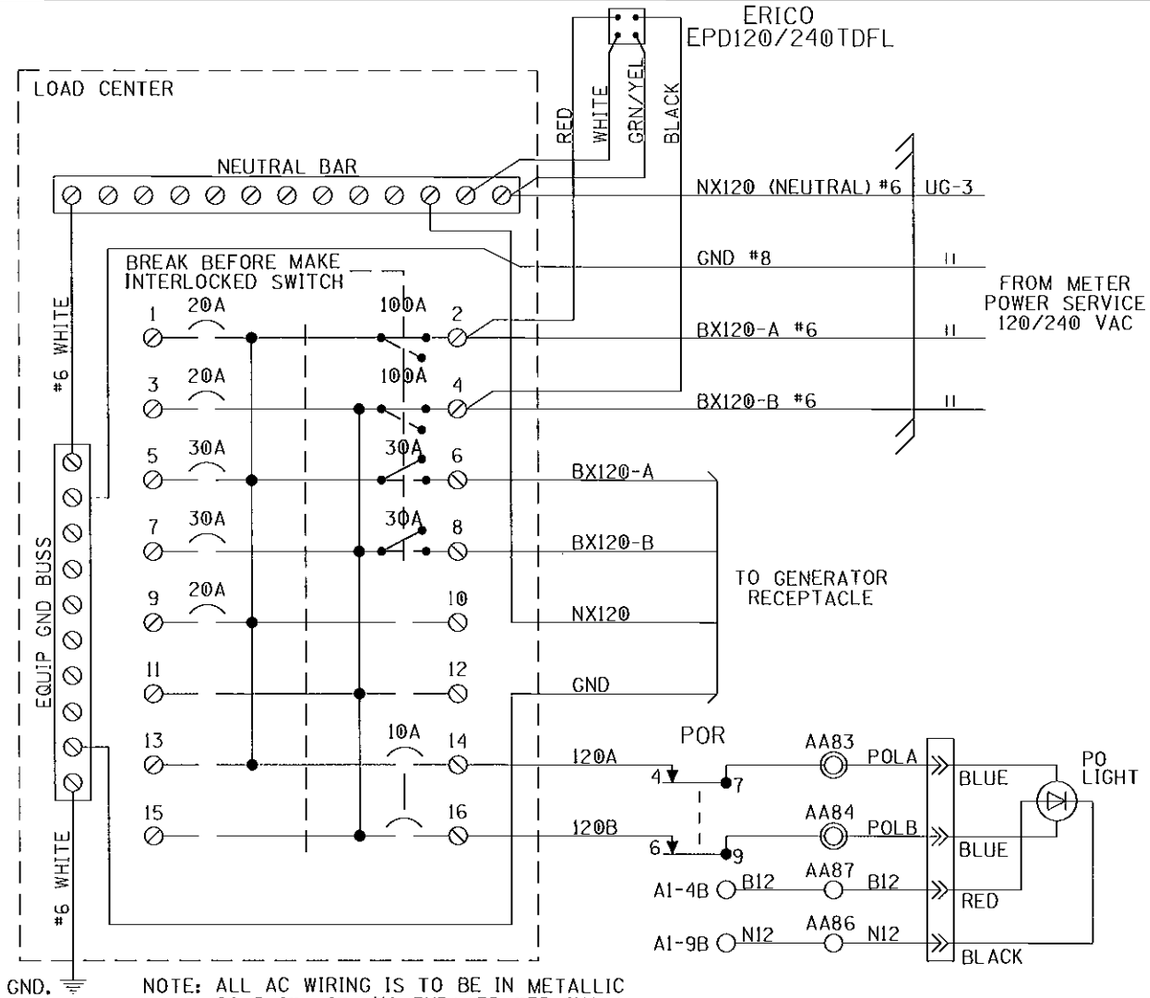

NOTE: ALL AC WIRING IS TO BE IN METALLIC CONDUIT WITH NO EXPOSED TERMINALS. ALL AC 120V AND 240V EQUIPMENT IS TO BE PROPERLY GROUNDED.

SQUARE "D" PART NUMBERS:

LOAD CENTER——Q0116L125G
10A 1P CIR BKR——Q0110
10A 2P CIR BKR——Q0210
20A 1P CIR BKR——Q0120
30A 1P CIR BKR——Q0130
30A 2P CIR BKR——Q0230
60A 2P CIR BKR——Q0260
100A 2P CIR BKR——Q02100
MECH INTERLOCK——PK4DTIM4LA

GENERATOR RECEPTACLE:
MALE CONNECTOR - NEMA L1430-FI

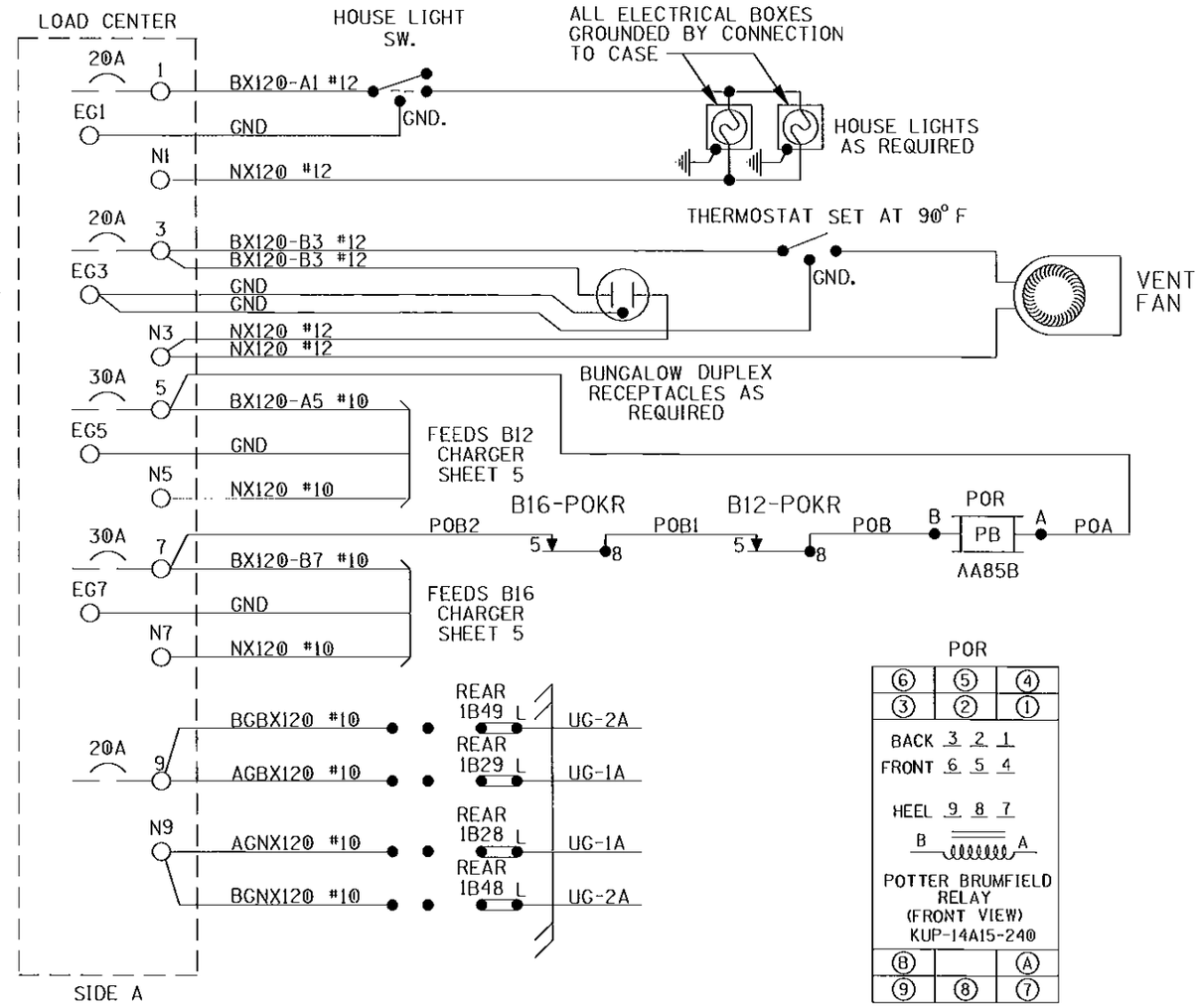

LOAD CENTER WIRING

DESIGNED BY: TAH 09-01-11	NORFOLK SOUTHERN	
DRAWN BY: RSD 09-01-11	OFFICE OF ASS'T. VICE PRESIDENT COMM. & SIGNAL, ATLANTA, GA.	M.P.: 50.38W
CHECKED BY: SAH 09-01-11	BARTELSO, IL GATES/FLS AT CR1700E (PELICAN RD.)	
	PROFILE 7C	FILE No. R-
IN SERVICE: - -	CADD or DWG. No. SE9167P.04	SHEET No. 4 of 22

REVISION INITIALS

PROPERTY
NORFOLK SOUTHERN RAILWAY CO.

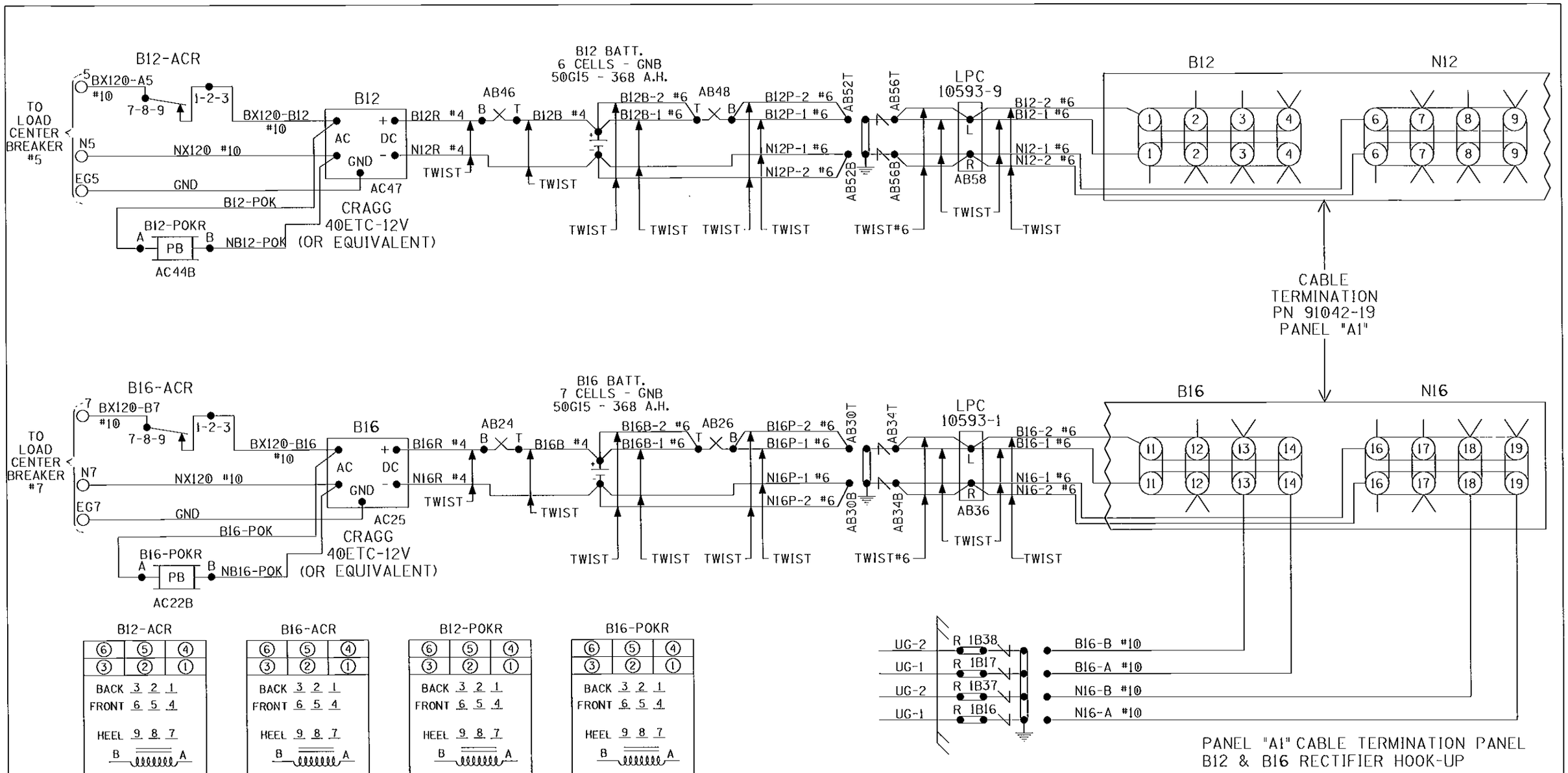

PANEL "A1" CABLE TERMINATION PANEL
B12 & B16 RECTIFIER HOOK-UP

NOTE:
ALL WIRING TO BE #16AWG
UNLESS NOTED OTHERWISE.

DESIGNED BY: TAH 09-01-11	NORFOLK SOUTHERN		
DRAWN BY: RSD 09-01-11	OFFICE OF ASS'T. VICE PRESIDENT COMM. & SIGNAL, ATLANTA, GA.	M.P.:	50.38W
CHECKED BY: SAH 09-01-11	BARTELSO, IL GATES/FLS AT CR1700E (PELICAN RD.)		
IN SERVICE: - -	PROFILE 7C	FILE No. R-	
	CADD or DWG. No. SE9167P.05	SHEET No. 5 of 22	

REVISION INITIALS										

PROPERTY
NORFOLK SOUTHERN RAILWAY CO.

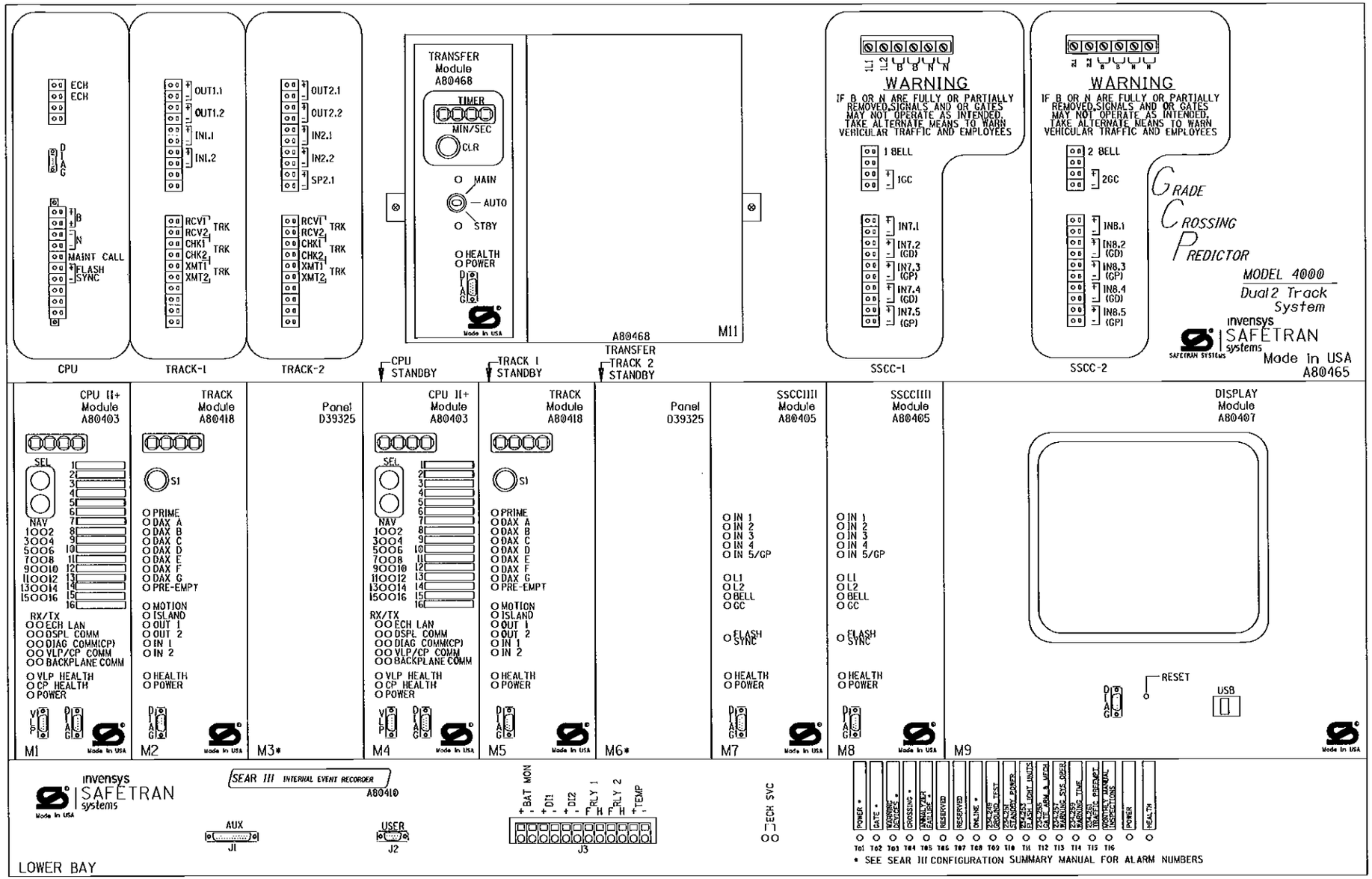

WARNING

REMOVAL OF THE SSCCIIII MODULE WILL CAUSE THE GATE(S) TO DROP BUT THE LIGHTS WILL NOT ACTIVATE

CAUTION

ASSURE CORRECT POLARITY OF THE SSCCIIII MODULE OR SEVERE DAMAGE WILL OCCUR.

ATTENTION!

ENSURE THE DISPLAY MODULE HEATER IS DISABLED. LEAVING THE DISPLAY HEATER ENABLED WILL REDUCE THE AMOUNT OF BATTERY STANDBY TIME IN THE EVENT OF AN AC POWER FAILURE.

HEATER FUNCTION IS JUMPER SELECTABLE ON THE DISPLAY MODULE BOARD.
THREE OPTIONS ARE AVAILABLE:
NORMAL LCD HTR (DEFAULT)
HI CURRENT
NO JUMPER (HEATER DISABLED)

*= MAIN AND STANDBY MAY USE RIO IN TRACK 2 SLOTS (M3 AND M6)

PANEL "A2" 4000 GCP REDUNDANT 2-TK CHASSIS AND MODULE LAYOUT

DESIGNED BY: TAH 09-01-11	NORFOLK SOUTHERN		
DRAWN BY: RSD 09-01-11	OFFICE OF ASS'T. VICE PRESIDENT COMM. & SIGNAL, ATLANTA, GA.	M.P.: 50.38W	
CHECKED BY: SAH 09-01-11	BARTELSO, IL GATES/FLS AT CR1700E (PELICAN RD.)		
IN SERVICE: - -	PROFILE 7C	FILE No. R-	
	CADD or DWG. No. SE9167P.06	SHEET No. 6 of 22	

REVISION INITIALS

PROPERTY
NORFOLK SOUTHERN RAILWAY CO.

Program Report

Location and SIN

DOT Number: 724669Y
Milepost Number: 50.38-W
Site Name: CR 1700E (PELICAN RD)

SIN: 755053305316

MCF and Template Selection

MCF Name: GCP-T6X-02-1.mcf
MCF Revision: 021
MCFCRC: 6076E435

Template = 1A:6 Trk Bi

Check Numbers

Office Check No. (DT 4.6.0): 6DBE3D72
Office Check Number: 6DBE3D72
Config. Check Number: 5328A05C
(Based on MCF Revision 021)

Program

BASIC: module configuration
Track 1 Slot = Track
Track 2/RIO 1 Slot = Not Used
Track 3 Slot = Not Used
Track 4 Slot = Not Used
Track 5/RIO 2 Slot = Not Used
Track 6/RIO 3 Slot = Not Used
SSCC-1 Slot = SSCC31
SSCC-2 Slot = SSCC31
SEAR Used = Yes

BASIC: MS/GCP operation
Track 1: MS/GCP Operation = Yes

BASIC: island operation
Track 1: Island Used = Internal

BASIC: preemption
Preempt Logic = No

BASIC: radio Dax links
Radio DAX link A Used = No
Radio DAX link B Used = No

BASIC: Vital Comms links
Vital Comms link 1 Used = No
Vital Comms link 2 Used = No

PREDICTORS: track 1
Track 1: Prime Used = Yes
Track 1: Dax A Used = No
Track 1: Dax B Used = No
Track 1: Dax C Used = No
Track 1: Dax D Used = No
Track 1: Dax E Used = No
Track 1: Dox F Used = No
Track 1: Dox G Used = No

GCP: track 1
Track 1: GCP Freq Category = Standard
Track 1: GCP Frequency = 348 Hz
Track 1: Approach Distance = 3087 ft
Track 1: Uni/Bi/Sim-Bidirnl = Bidirnl
Track 1: GCP Transmit Level = Medium
Track 1: Island Connection = Isl1
Track 1: Island Distance = 120 ft
Track 1: Computed Distance = 9999 ft
Track 1: Lineorization Steps = 100

GCP: track 1 enhanced det
Track 1: Inbound PS Sensitivity = Off
Track 1: Speed Limiting Used = Yes
Track 1: Outbound False Act Lvl = Normal
Track 1: Outbound PS Timer = 20 sec
Track 1: Trailing Switch Logic = Off
Track 1: Post Joint Detn Time = 15 sec
Track 1: Adv Appr Predn = No
Track 1: CancelPickup Deloy = This Isl

GCP: track 1 prime
Track 1: Prime Warning Time = 30 sec
Track 1: Prime Offset Distance = 0 ft
Track 1: Switch MS EZ Level = 10
Track 1: Prime MS/GCP Mode = Pred
Track 1: Prime Pickup Delay = 15 sec
Track 1: Prime UAX = Not Used

GCP: track 1 pos start
Track 1: Positive Start = Off
Track 1: Sudden Shnt Det Used = No
Track 1: Low EZ Detection Used = No

GCP: track 1 MS Control
Track 1: MS/GCP CtrlIP Used = No
Track 1: MS Sensitivity Level = 0
Track 1: Compensation Level = 1300
Track 1: Warn Time-Ballast Comp = High
Track 1: Low EX Adjustment = 39
Track 1: Bidirn Dax Passthru = No
Track 1: False Act on Train Stop = No
Track 1: EX Limiting Used = Yes
Track 1: EZ Correction Used = Yes

ISLAND: track 1
Track 1: IslFrequency = 4.9 kHz
Track 1: Pickup Delay (2s +) = 0 sec
Track 1: IslEnable IP Used = No

AND: track Anding
AND 1 XR Used = Yes
AND 2 Used = No
AND 3 Used = No
AND 4 Used = No
AND 5 Used = No
AND 6 Used = No
AND 7 Used = No
AND 8 Used = No

AND: AND 1 XR
AND 1 XR Trock 1 = Prime
AND 1 Enable Used = Yes
And 1 Enable Pickup = 5 sec
AND 1 Enable Drop = 0 sec
AND 1 Wrap Used = No

ADVANCED: MS restart
MS/GCP Restart Used = No

ADVANCED: out of service
OOS Control = Display+OOS IPs
OOS Timeout = Yes
OOS Timeout = 1 hrs

ADVANCED: out of service 2
TI OOS Control = OOS Input 1

ADVANCED: track wrap circuits
Wrap LOS Timer = 5 sec
Track 1 Wrap Used = No

ADVANCED: trk 1 overrides
Track 1: AllPredictors Override Used = No

ADVANCED: OR logic
OR 1 Used = No
OR 2 Used = No
OR 3 Used = No
OR 4 Used = No

ADVANCED: internal I/O 1
Pass Thrus = No
Int.1 Sets = Not Used
Int.1 Set by = Not Used
Int.2 Sets = Not Used
Int.2 Set by = Not Used
Int.3 Sets = Not Used
Int.3 Set by = Not Used
Int.4 Sets = Not Used
Int.4 Set by = Not Used

ADVANCED: internal I/O 2
Int.5 Sets = Not Used
Int.5 Set by = Not Used
Int.6 Sets = Not Used
Int.6 Set by = Not Used
Int.7 Sets = Not Used
Int.7 Set by = Not Used
Int.8 Sets = Not Used
Int.8 Set by = Not Used

ADVANCED: internal I/O 3
Int.9 Sets = Not Used
Int.9 Set by = Not Used
Int.10 Sets = Not Used
Int.10 Set by = Not Used
Int.11 Sets = Not Used
Int.11 Set by = Not Used
Int.12 Sets = Not Used
Int.12 Set by = Not Used

ADVANCED: internal I/O 4
Int.13 Sets = Not Used
Int.13 Set by = Not Used
Int.14 Sets = Not Used
Int.14 Set by = Not Used
Int.15 Sets = Not Used
Int.15 Set by = Not Used
Int.16 Sets = Not Used
Int.16 Set by = Not Used

4000 GCP PROGRAMMING SETUP

DESIGNED BY: TAH 09-01-11	NORFOLK SOUTHERN		
DRAWN BY: RSD 09-01-11	OFFICE OF ASS'T. VICE PRESIDENT COMM. & SIGNAL, ATLANTA, GA.	M.P.:	50.38W
CHECKED BY: SAH 09-01-11	BARTELSO, IL GATES/FLS AT CR1700E (PELICAN RD.)		
	PROFILE 7C	FILE No.	R-
IN SERVICE: - -	CADD or DWG. No. SE9167P.07	SHEET No.	7 of 22

REVISION INITIALS

PROPERTY
NORFOLK SOUTHERN RAILWAY CO.

ADVANCED: site options
Daylight Savings = On
Units = Standard
Maint CallRpt IP Used = No
Emergency Activate IP = No
EZ/EX Logging = Change
EZ/EX Point Change = 3

SSCC
Gates Used = Yes
SSCC1+2 GPs Coupled = Yes
Min Activation = 0 sec
Rmt Activation Cancel= 2 min
Bell On Gate Rising = No
Mute Bell On Gate Down = No
SSCCIV Controller Used = No

SSCC: 1
SSCC-1 Activation = AND 1 XR
SSCC-1 Gate Delay = 4 sec
SSCC-1 Number of GPs = 1
SSCC-1 Number of GDs = 2
SSCC 1 : Flash Rate = 40
SSCC 1 : Low Battery Detection = No
SSCC 1 : Flash Sync = master
SSCC 1 : Invert Gate Output = No
SSCC 1 : Lamp NeutralTest = On
Aux-1 Xng CtrlUsed = No

SSCC: 2
SSCC-2 Activation = AND 1 XR
SSCC-2 Gate Delay = 4 sec
SSCC-2 Number of GPs = 0
SSCC-2 Number of GDs = 0
SSCC 2 : Flash Rate = 40
SSCC 2 : Low Battery Detection = No
SSCC 2 : Flash Sync = slave
SSCC 2 : Invert Gate Output = No
SSCC 2 : Lamp NeutralTest = On
Aux-2 Xng CtrlUsed = No

OUTPUT: assignment page 1
OUT 1.1 = Not Used
OUT 1.2 = Not Used

INPUT: assignment page 1
IN 1.1 = Not Used
IN 1.2 = Not Used

IO: assignment SSCC
OUT GC 1 = Gate Output 1
OUT GC 2 = Gate Output 2
IN 7.1 = Not Used
IN 7.2 = GD 1.2
IN 7.3 = AND 1 XR Enable
IN 7.4 = GD 1.1
IN 7.5 = GP 1.1
IN 8.1 = Not Used
IN 8.2 = Out Of Service IP 1
IN 8.3 = Not Used
IN 8.4 = Not Used
IN 8.5 = Not Used

SEAR
SEAR Subnode = 3
DI 1 = Gnd Flt Tester 1
DI 2 = Not Used
Rly 1 = Ground Fault Test
Rly 2 = AC Control

SEAR: Inputs
SP 2.1 = POK 1
SP 3.1 = Not Used
SP 4.1 = Not Used
SP 5.1 = Not Used
SP 6.1 = Not Used

SEAR: slot 1-4 Inputs
IN 1.1 = Not Used
IN 1.2 = Not Used
IN 2.1 = Not Used
IN 2.2 = Not Used
IN 3.1 = Not Used
IN 3.2 = Not Used
IN 4.1 = Not Used
IN 4.2 = Not Used

SEAR: inputs slot 5
IN 5.1 = Not Used
IN 5.2 = Not Used

SEAR: inputs slot 6
IN 6.1 = Not Used
IN 6.2 = Not Used

SEAR: slot 7-8 inputs
IN 7.1 = TSS 1
IN 8.1 = TSS 2
IN 8.3 = POK 2
IN 8.4 = Not Used
IN 8.5 = Not Used

SITE: programming
Radio Subnode = 1
Field Password = Off
Low Battery Enabled = Off

Configuration Package File

Filename: se9167.pac

4000 GCP PROGRAMMING SETUP

DESIGNED BY: TAH 09-01-11	NORFOLK SOUTHERN		
DRAWN BY: RSD 09-01-11	OFFICE OF ASS'T. VICE PRESIDENT COMM. & SIGNAL, ATLANTA, GA.	M.P.: 50.38W	
CHECKED BY: SAH 09-01-11	BARTELSO, IL GATES/FLS AT CR1700E (PELICAN RD.)		
IN SERVICE: - -	PROFILE 7C	FILE No. R-	
	CADD or DWG. No. SE9167P.08	SHEET No. 8 of 22	

REVISION INITIALS											

PROPERTY
NORFOLK SOUTHERN RAILWAY CO.

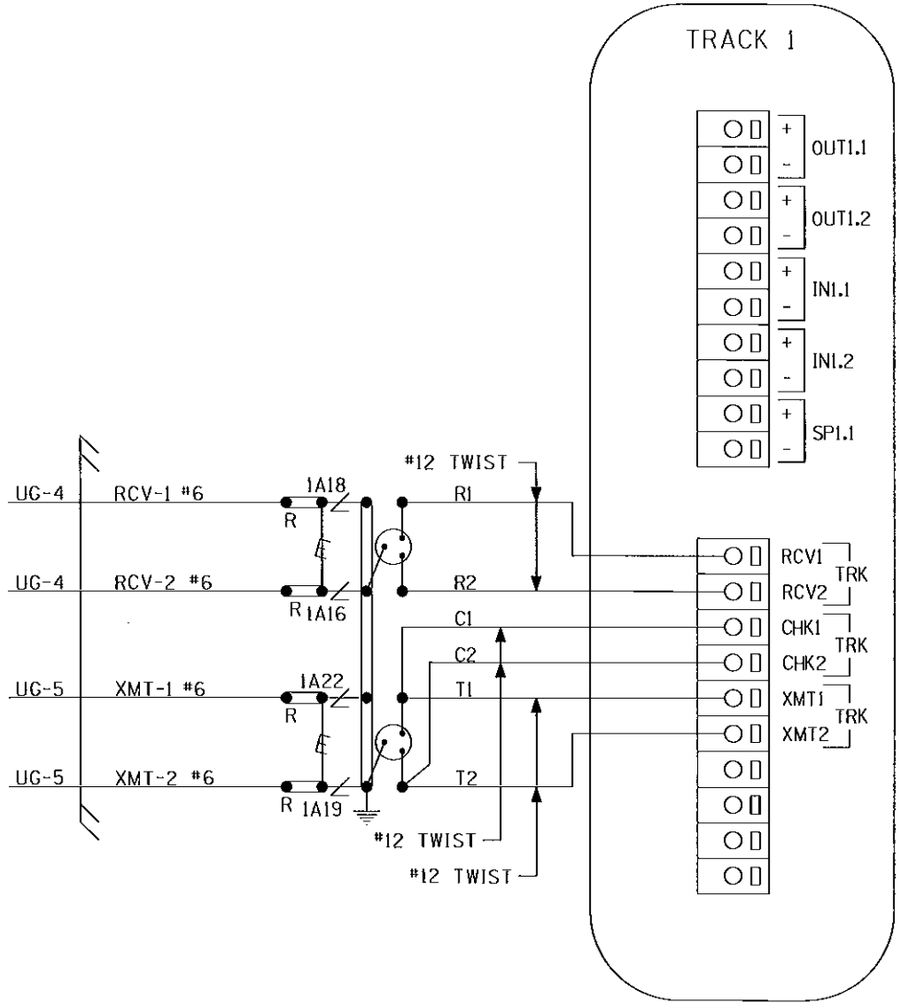

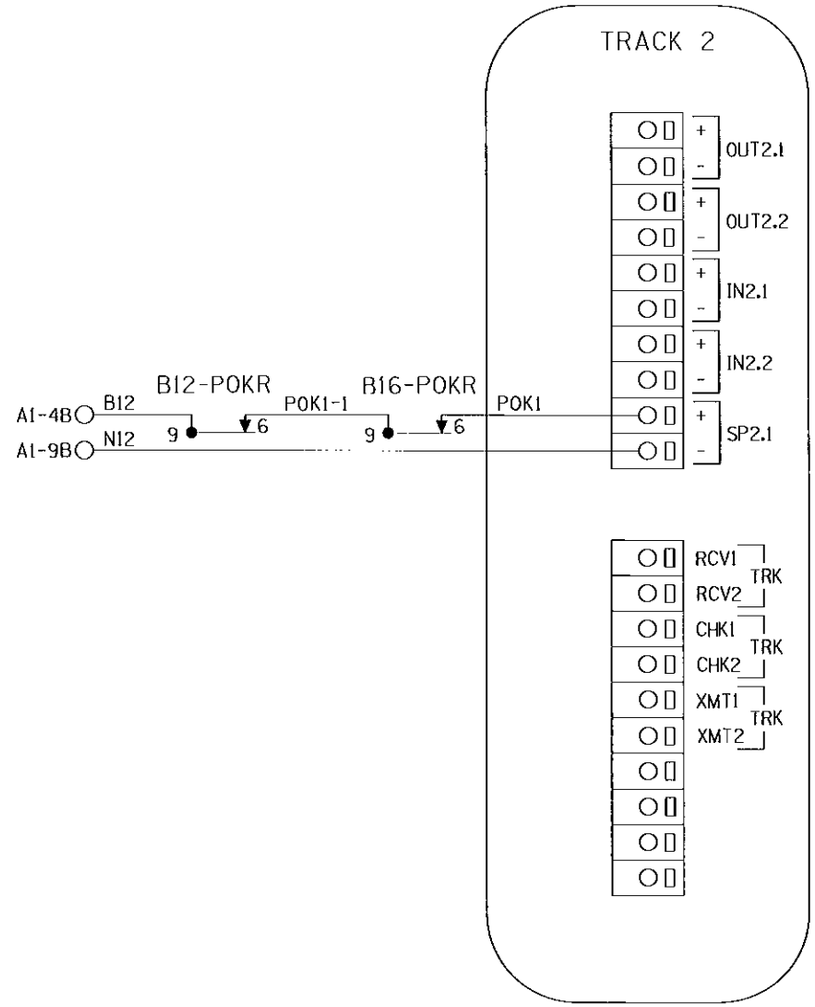

PANEL "A2" CONNECTORS FOR MODULES (A80418)

NOTE:
ALL WIRING TO BE #16AWG
UNLESS NOTED OTHERWISE.

DESIGNED BY: TAH 09-01-11	NORFOLK SOUTHERN		
DRAWN BY: RSD 09-01-11	OFFICE OF ASS'T. VICE PRESIDENT COMM. & SIGNAL, ATLANTA, GA.	M.P.:	50.38W
CHECKED BY: SAH 09-01-11	BARTELSO, IL GATES/FLS AT CR1700E (PELICAN RD.)		
	PROFILE 7C	FILE No.	R-
IN SERVICE: - -	CADD or DWG. No. SE9167P.09	SHEET No.	9 of 22

REVISION INITIALS										

PROPERTY
NORFOLK SOUTHERN RAILWAY CO.

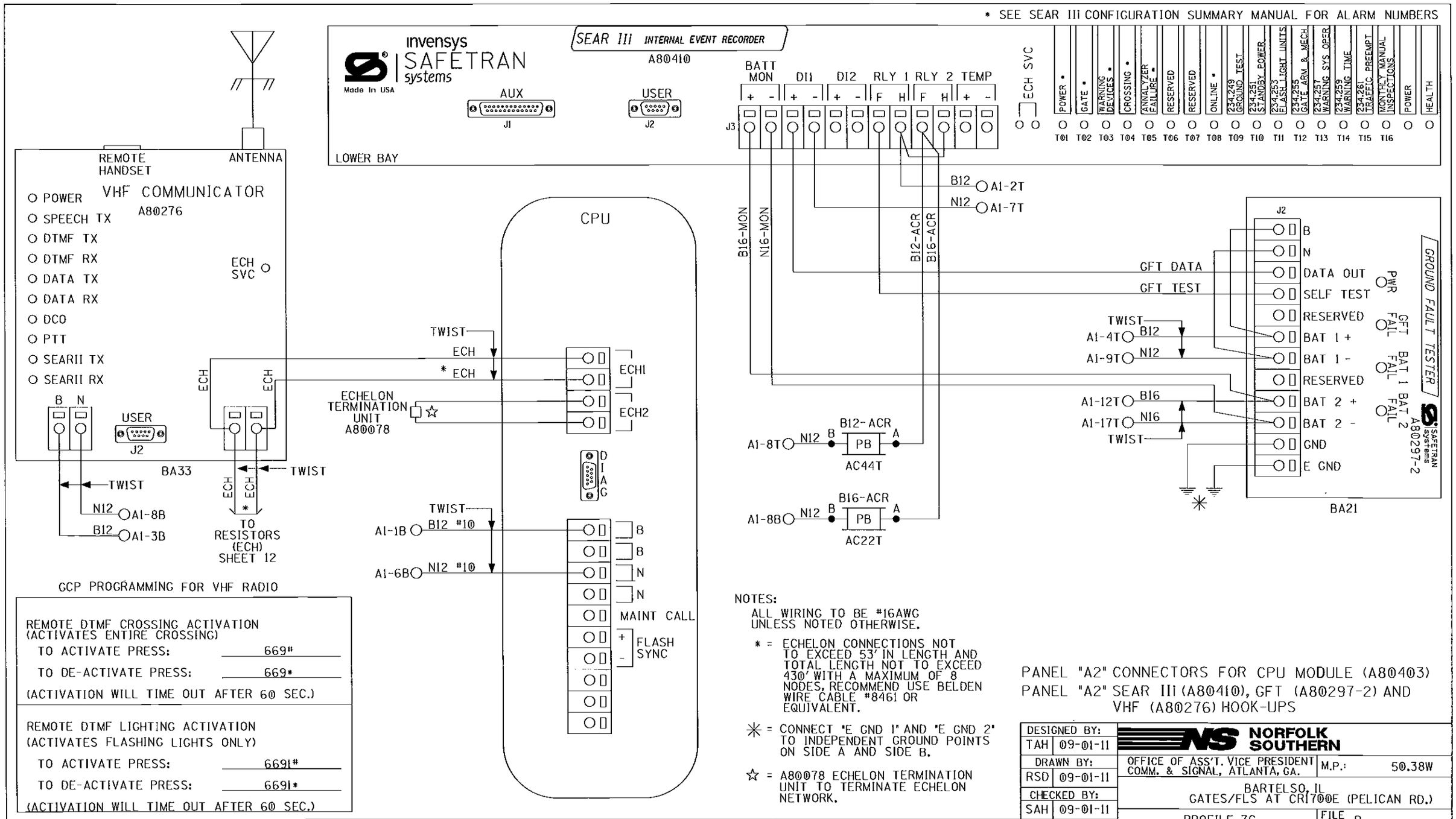

GCP PROGRAMMING FOR VHF RADIO

REMOTE DTMF CROSSING ACTIVATION (ACTIVATES ENTIRE CROSSING)	
TO ACTIVATE PRESS:	669#
TO DE-ACTIVATE PRESS:	669*
(ACTIVATION WILL TIME OUT AFTER 60 SEC.)	
REMOTE DTMF LIGHTING ACTIVATION (ACTIVATES FLASHING LIGHTS ONLY)	
TO ACTIVATE PRESS:	6691#
TO DE-ACTIVATE PRESS:	6691*
(ACTIVATION WILL TIME OUT AFTER 60 SEC.)	

NOTES:
ALL WIRING TO BE #16AWG UNLESS NOTED OTHERWISE.

* = ECHELON CONNECTIONS NOT TO EXCEED 53' IN LENGTH AND TOTAL LENGTH NOT TO EXCEED 430' WITH A MAXIMUM OF 8 NODES, RECOMMEND USE BELDEN WIRE CABLE #8461 OR EQUIVALENT.

✳ = CONNECT 'E GND 1' AND 'E GND 2' TO INDEPENDENT GROUND POINTS ON SIDE A AND SIDE B.

☆ = A80078 ECHELON TERMINATION UNIT TO TERMINATE ECHELON NETWORK.

PANEL "A2" CONNECTORS FOR CPU MODULE (A80403)
PANEL "A2" SEAR III (A80410), GFT (A80297-2) AND VHF (A80276) HOOK-UPS

DESIGNED BY: TAH 09-01-11	NORFOLK SOUTHERN		
DRAWN BY: RSD 09-01-11	OFFICE OF ASS'T. VICE PRESIDENT COMM. & SIGNAL, ATLANTA, GA.	M.P.:	50.38W
CHECKED BY: SAH 09-01-11	BARTELSO, IL GATES/FLS AT CR1700E (PELICAN RD.)		
IN SERVICE: - -	PROFILE 7C	FILE No. R-	
	CADD or DWG. No. SE9167P.10	SHEET No. 10 of 22	

REVISION INITIALS

PROPERTY
NORFOLK SOUTHERN RAILWAY CO.

TO CONFIGURE SEARIII PRESS SITE SETUP KEY.
USE ARROW KEYS TO MAKE SELECTION,
PRESS ENTER AFTER SELECTION HAS BEEN MADE.

	SITE SET UP PROCEDURE	
	FUNCTION	LED DISPLAY
	DATE/TIME	
	AUTOMATIC DST ADJUSTMENT	YES
	TIME ZONE	CDT
	SITE NAME	CR1700E (PELICAN RD.)
	MILEPOST	50.38-W
	DOT #	724669Y
	TESTER TYPE	CROSSING
	DATE FORMAT	MM-DD-YYYY
	TEMP FORMAT	FAHRENHEIT
	INDICATE HOLD (SEC)	0
	INDICATE REFRESH (SEC)	60
	SITE ATCS	7.550.533.053.03.01
	SITE TYPE	NO COMMUNICATION
***	OFFICE ATCS ADDRESS	2.550.01.9100
***	PRIMARY HOP ADDR	7.RRR.LLL.GGG.XX.XX
***	BACKUP HOP ADDR 1	7.RRR.LLL.GGG.XX.XX
***	BACKUP HOP ADDR 2	7.RRR.LLL.GGG.XX.XX
***	POLL ID	1
***	MODE	GEN/ATCS
***	WAMS XID	DISABLED
***	OFFICE COMM DEVICE	MCM (ECHELON)
***	RADIO ATCS ADDR	7.RRR.LLL.GGG.01.01
***	PHONE #	(OFFICE NUMBER)
***	INIT STRING	
***	FIELD COMM	NONE
****	USER PORT	BAUD 57600, N, 8, 1, NONE
****	AUX PORT	BAUD 9600, N, 8, 1, NONE

VERIFY NUMBER OF BULBS: SENSOR #1	
CURR 1: LAMP SET UP	4 BULBS
CURR 2: LAMP SET UP	4 BULBS

VERIFY NUMBER OF BULBS: SENSOR #2	
CURR 1: LAMP SET UP	4 BULBS
CURR 2: LAMP SET UP	4 BULBS

	CONTROL SYSTEM CONFIGURATION MENU QUESTIONS	
	THE QUESTION	SELECT FROM MENU OPTION
	RESET NAMES AND MODULES?	YES
	RAILROAD NUMBER	550
	CROSSING CONFIGURATION	NORMAL
	AND 1 USED AS XR?	YES
	AND 2 USED AS XR?	NO
	AND 3 USED AS XR?	NO
	AND 4 USED AS XR?	NO
	AND 5 USED AS XR?	NO
	AND 6 USED AS XR?	ΓO
	AND 7 USED AS XR?	NO
	AND 8 USED AS XR?	NO
*	XR CONTROLLED BY FOREIGN RR	
	ENTRANCE GATES	2
*	GATES CONTROLLED BY FOREIGN RR	
	GATE POSITION FAIL TIME (SECONDS)	20
	BATTERY BANKS	2
	BATTERY MON USED	YES
	INTERNAL CROSSING CONTROLLERS	2
	EXTERNAL CROSSING CONTROLLERS	0
	VHF COMMUNICATOR	YES
	DTMF ACTIVATION	YES
*****	ACTIVATION CODE	669
	ACTIVATION TIMEOUT (SECONDS)	60
	ILOD MODULES	2
	ANY LED BULBS USED	NO
	AUTO INSPECTIONS	NO
	BELL SENSORS	1
**	BELL SENSOR TSS1	YES
**	BELL SENSOR TSS2	NO
**	BELL SENSOR TSS3	NO
**	BELL SENSOR TSS4	NO
**	BELL SENSOR TSS5	NO
**	BELL SENSOR TSS6	NO
**	BELL SENSOR TSS7	NO
**	BELL SENSOR TSS8	NO

CONTROL SYSTEM CONFIGURATION MENU QUESTIONS (CONT.)	
BELL ON	GATES LOWERING
GFT'S	YES
BATTERIES ON GFT1	2
GATE TIP SENSORS	YES
RTU	NO
VHF VOICE CHANNEL	2
VHF DATA CHANNEL	2
USE CELL MODEM NON-CRITICAL FEATURE	NO
FULL APPROACH MOVES ALARM	ACTIVATE

PROGRAM MENU QUESTIONS	PROGRAM
EDIT DIGITAL INPUTS	NO
EDIT BATTERIES	NO
EDIT RELAYS	NO
EDIT INDICATOR LEDS	NO
EDIT TEST LEDS	NO
EDIT ILOD SENSORS	NO
EDIT VHF SETTINGS	NO
GCP4K ATCS SUBNODE	16

NOTES:

* = DISPLAYED IF CROSSING CONFIGURATION IS SPLIT GATE

** = OPTIONS: IF BELL SENSOR = 0, THEN BELL FIELDS ARE NOT USED.

*** = IF SITE TYPE = NO COMMUNICATION, THEN THESE OPTIONS ARE NOT DISPLAYED

**** = THESE SETTINGS SHOULD BE LEFT AT THE DEFAULT SETTING.

***** = USE LAST 3 NUMBERS FROM DOT NUMBER

SEAR III PROGRAMMING SETUP

DESIGNED BY: TAH 09-01-11	NORFOLK SOUTHERN		
DRAWN BY: RSD 09-01-11	OFFICE OF ASS'T. VICE PRESIDENT COMM. & SIGNAL, ATLANTA, GA.	M.P.:	50.38W
CHECKED BY: SAH 09-01-11	BARTELSO, IL GATES/FLS AT CR1700E (PELICAN RD.)		
IN SERVICE: - -	PROFILE 7C	FILE No.	R-
	CADD or DWG. No. SE9167P.11	SHEET No.	11 of 22

REVISION INITIALS										

PROPERTY
NORFOLK SOUTHERN RAILWAY CO.

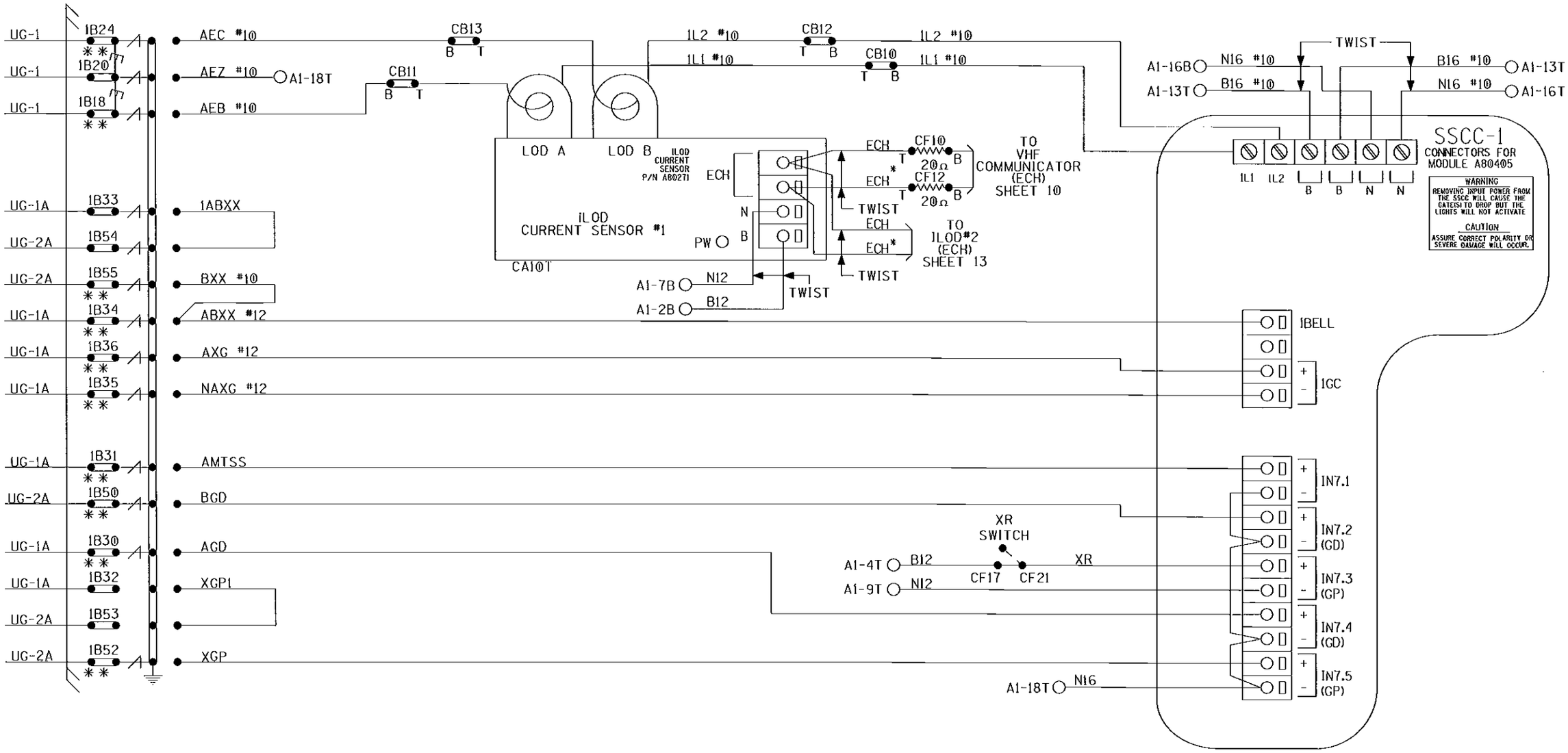

NOTES: ALL WIRING TO BE #16AWG UNLESS NOTED OTHERWISE.

* = ECHELON CONNECTIONS NOT TO EXCEED 53' IN LENGTH AND TOTAL LENGTH NOT TO EXCEED 430' WITH A MAXIMUM OF 8 NODES. RECOMMEND USE BELDEN WIRE CABLE #8461 OR EQUIVALENT.

** = TEST LINKS MUST BE OPENED TEMPORARILY FOR NEW COLD START OF NEW OR REPLACEMENT SSCC MODULE AND CAN ONLY BE CLOSED IN SEQUENCE WITH MFR. INSTRUCTIONS: SECTION 8 OF THE GCP 4000 REFERENCE MANUAL.

PANEL "A2" CONNECTORS FOR SSCC#1 MODULE (A80405)
ILOD#1 (A80271) HOOK-UP

DESIGNED BY: TAH 09-01-11	NORFOLK SOUTHERN		
DRAWN BY: RSD 09-01-11	OFFICE OF ASS'T. VICE PRESIDENT COMM. & SIGNAL, ATLANTA, GA.	M.P.:	50.38W
CHECKED BY: SAH 09-01-11	BARTELSO, IL GATES/FLS AT CR1700E (PELICAN RD.)		
IN SERVICE: - -	PROFILE 7C	FILE No.	R-
	CADD or DWG. No. SE9167P.12	SHEET No.	12 of 22

REVISION INITIALS

PROPERTY NORFOLK SOUTHERN RAILWAY CO.

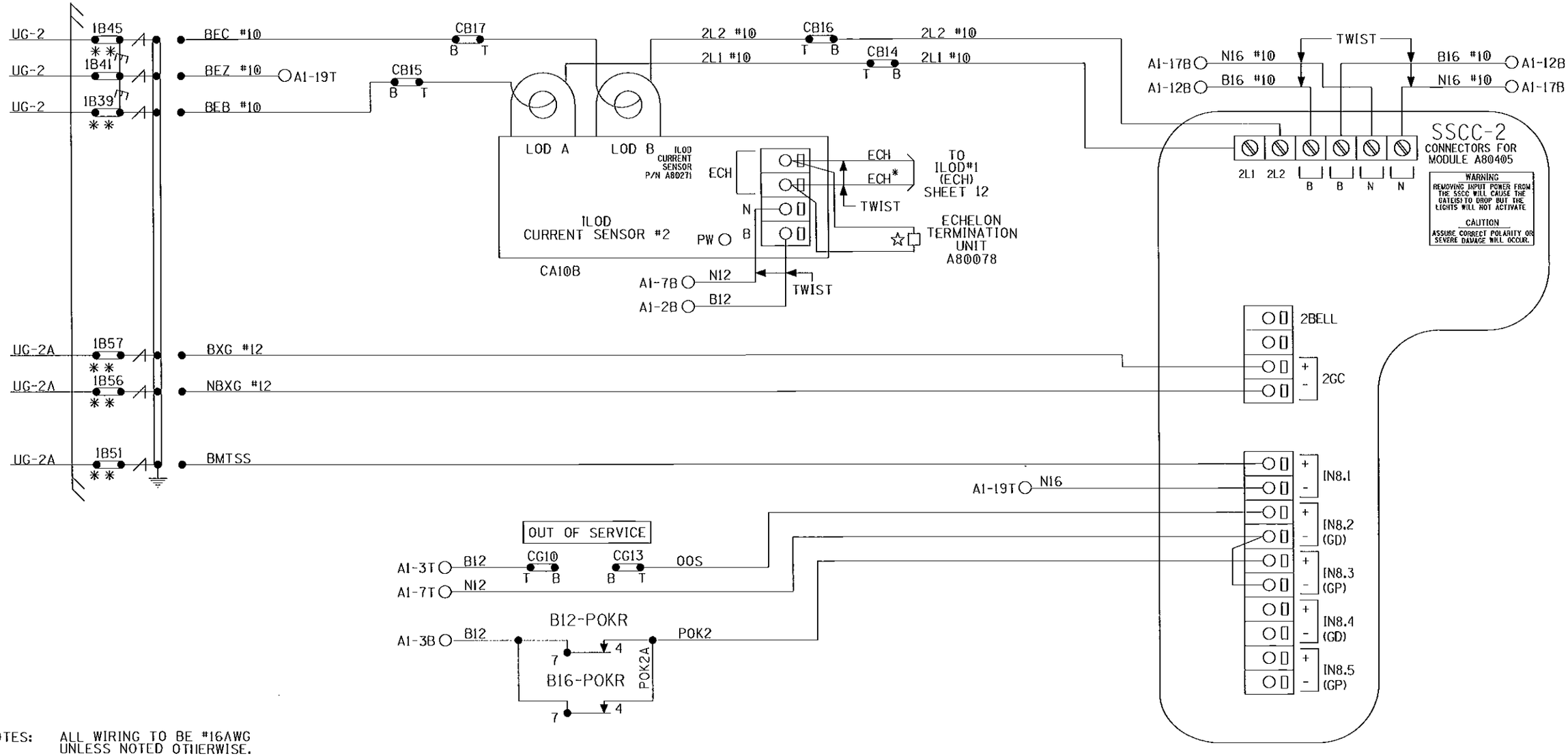

NOTES: ALL WIRING TO BE #16AWG UNLESS NOTED OTHERWISE.

* = ECHELON CONNECTIONS NOT TO EXCEED 53' IN LENGTH AND TOTAL LENGTH NOT TO EXCEED 430' WITH A MAXIMUM OF 8 NODES, RECOMMEND USE BELDEN WIRE CABLE #8461 OR EQUIVALENT.

** = TEST LINKS MUST BE OPENED TEMPORARILY FOR NEW COLD START OF NEW OR REPLACEMENT SSCC MODULE AND CAN ONLY BE CLOSED IN SEQUENCE WITH MFR. INSTRUCTIONS: SECTION 8 OF THE GCP 4000 REFERENCE MANUAL.

☆ = A80078 ECHELON TERMINATION UNIT TO TERMINATE ECHELON NETWORK.

PANEL "A2" CONNECTORS FOR SSCC#2 MODULE (A80405) ILOD#2 (A80271) HOOK-UP

DESIGNED BY: TAH 09-01-11	NORFOLK SOUTHERN		
DRAWN BY: RSD 09-01-11	OFFICE OF ASS'T. VICE PRESIDENT COMM. & SIGNAL, ATLANTA, GA.	M.P.: 50.38W	
CHECKED BY: SAH 09-01-11	BARTELSO, IL GATES/FLS AT CR1700E (PELICAN RD.)		
IN SERVICE: - -	PROFILE 7C	FILE No. R-	
	CADD or DWG. No. SE9167P.13	SHEET No. 13 of 22	

REVISION INITIALS											

PROPERTY NORFOLK SOUTHERN RAILWAY CO.

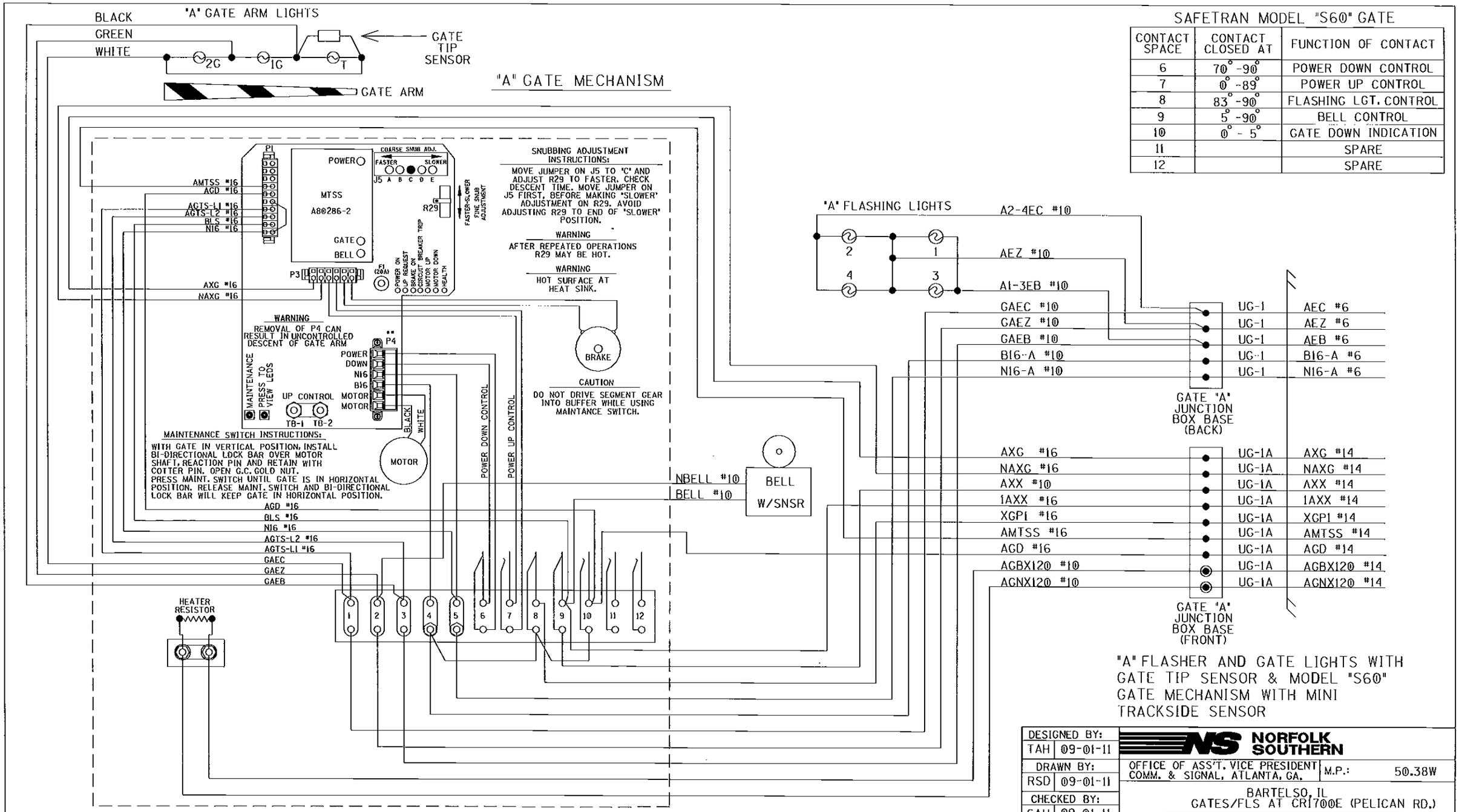

SAFETRAN MODEL "S60" GATE

CONTACT SPACE	CONTACT CLOSED AT	FUNCTION OF CONTACT
6	70° -90°	POWER DOWN CONTROL
7	0° -89°	POWER UP CONTROL
8	83° -90°	FLASHING LGT. CONTROL
9	5° -90°	BELL CONTROL
10	0° - 5°	GATE DOWN INDICATION
11		SPARE
12		SPARE

"A" FLASHER AND GATE LIGHTS WITH GATE TIP SENSOR & MODEL "S60" GATE MECHANISM WITH MINI TRACKSIDE SENSOR

DESIGNED BY: TAH 09-01-11	NORFOLK SOUTHERN		
DRAWN BY: RSD 09-01-11	OFFICE OF ASS'T. VICE PRESIDENT COMM. & SIGNAL, ATLANTA, GA.	M.P.:	50.38W
CHECKED BY: SAH 09-01-11	BARTELSO, IL GATES/FLS AT CR1700E (PELICAN RD.)		
IN SERVICE: - -	PROFILE 7C	FILE No.	R-
	CADD or DWG. No. SE9167P.14	SHEET No.	14 of 22

REVISION INITIALS

PROPERTY NORFOLK SOUTHERN RAILWAY CO.

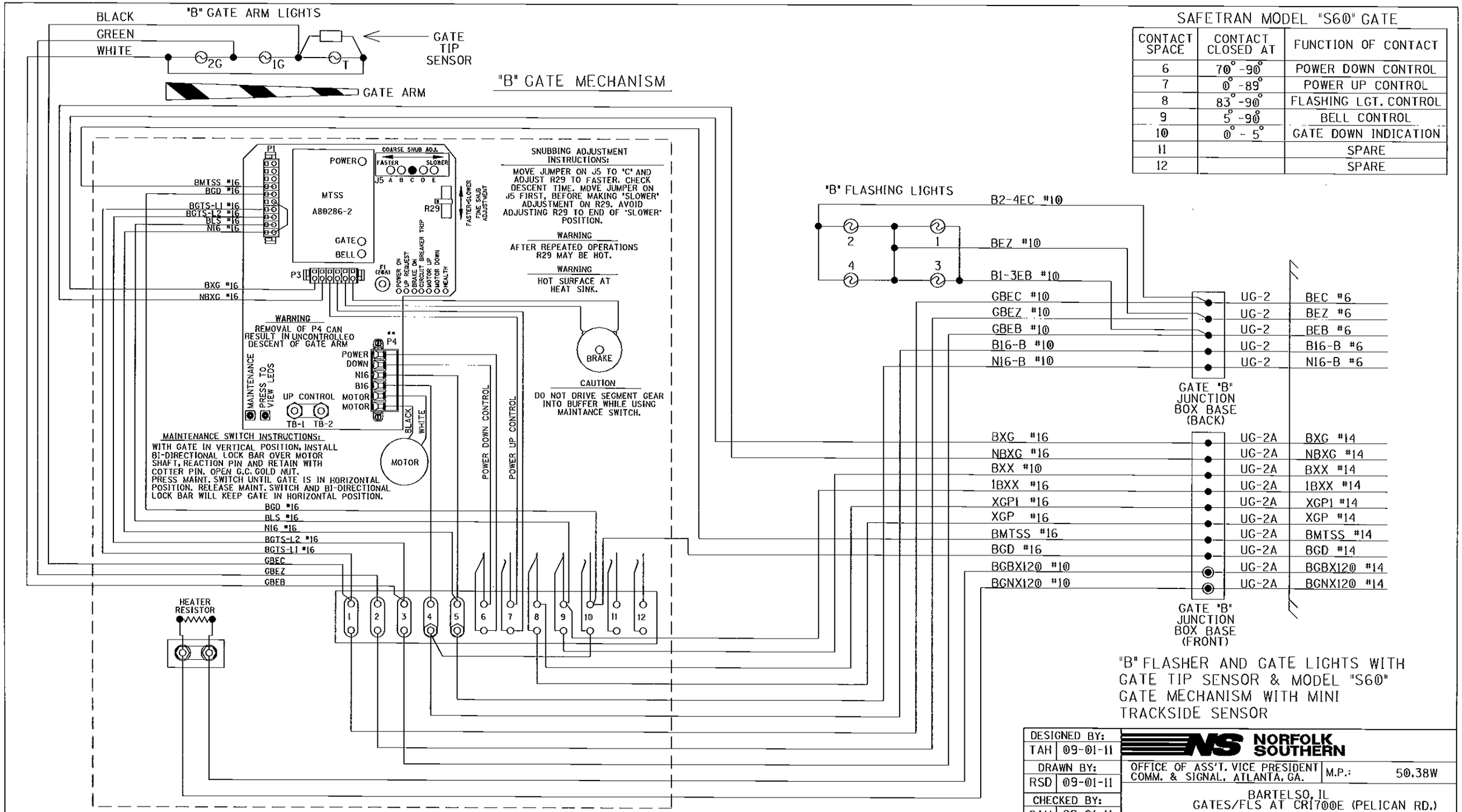

SAFETRAN MODEL "S60" GATE

CONTACT SPACE	CONTACT CLOSED AT	FUNCTION OF CONTACT
6	70° -90°	POWER DOWN CONTROL
7	0° -89°	POWER UP CONTROL
8	83° -90°	FLASHING LGT. CONTROL
9	5° -90°	BELL CONTROL
10	0° - 5°	GATE DOWN INDICATION
11		SPARE
12		SPARE

"B" FLASHER AND GATE LIGHTS WITH GATE TIP SENSOR & MODEL "S60" GATE MECHANISM WITH MINI TRACKSIDE SENSOR

DESIGNED BY: TAH 09-01-11	NORFOLK SOUTHERN		
DRAWN BY: RSD 09-01-11	OFFICE OF ASS'T. VICE PRESIDENT COMM. & SIGNAL, ATLANTA, GA.	M.P.:	50.38W
CHECKED BY: SAH 09-01-11	BARTELSO, IL GATES/FLS AT CR1700E (PELICAN RD.)		
IN SERVICE: - -	PROFILE 7C	FILE No. R-	
	CADD or DWG. No. SE9167P.15	SHEET No. 15 of 22	

REVISION INITIALS

PROPERTY
NORFOLK SOUTHERN RAILWAY CO.

LEFT TWO ROWS TERMINAL BOARD 1

"1A" "1B"

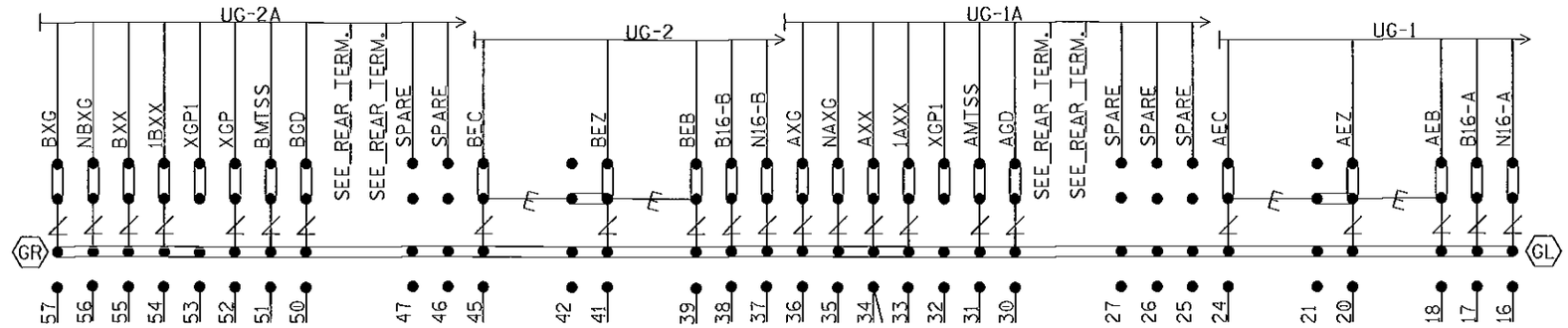

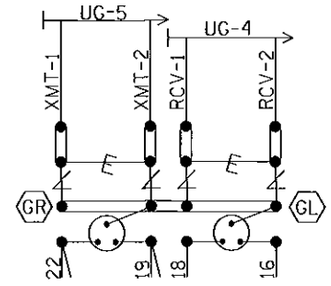

NOTE: INSTALL TEST LINKS ON ALL TRACK WIRES AND ON ALL LOW VOLTAGE UNDERGROUND CABLE TERMINATIONS.

SEE FARADAY SHIELD DETAILS - 1A & 1B FOR HOW THIS PORTION OF THE FARADAY SHIELD IS PREDRILLED. ONLY INSTALL AND USE THE TERMINALS NEEDED.

= Heavy Duty Equalizer (022700-1X)

= Clearview Lightning Arrester (022585-1X)

= LPC-10560-51

GR / GL = TERMINALS GROUNDED TO SHIELD. 4 POST BLOCKS USE EITHER - GR - SERMMI PART NO. 61278 GL - SERMMI PART NO. 61278-1.

BACKBOARD DETAIL - 1A & 1B

DESIGNED BY: TAH 09-01-11	NORFOLK SOUTHERN		
DRAWN BY: RSD 09-01-11	OFFICE OF ASS'T. VICE PRESIDENT COMM. & SIGNAL, ATLANTA, GA.	M.P.:	50.38W
CHECKED BY: SAH 09-01-11	BARTELSO, IL GATES/FLS AT CR1700E (PELICAN RD.)		
	PROFILE 7C	FILE No.	R-
IN SERVICE: - -	CADD or DWG. No. SE9167P.16	SHEET No.	16 of 22

REVISION INITIALS										

PROPERTY NORFOLK SOUTHERN RAILWAY CO.

REAR VIEW OF LEFT TWO ROWS TERMINAL BOARD 1
"1A"
"1B"

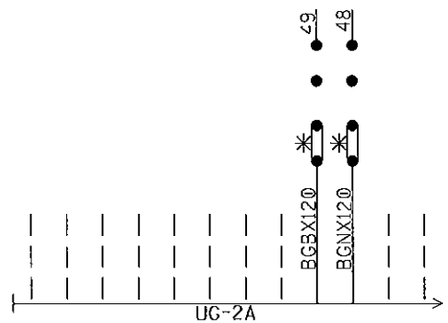

(SEE PREVIOUS SHEET FOR OTHER WIRES IN CABLE)

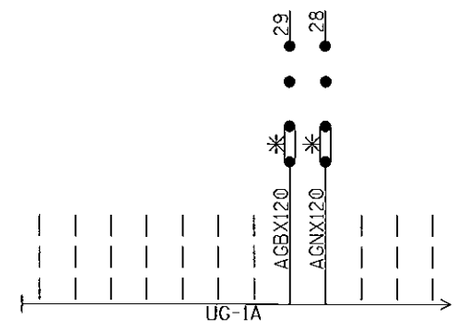

(SEE PREVIOUS SHEET FOR OTHER WIRES IN CABLE)

NOTE: ALL 120VAC AND ABOVE WILL BE WIRED TO THE REAR OF FARADAY BACKBOARD. INSULATED NUTS MUST BE USED ON ALL TERMINALS.

✳ = CLOSED DURING WINTER MONTHS

REAR OF FARADAY BACKBOARD
REAR BACKBOARD DETAIL - 1A & 1B

DESIGNED BY: TAH 09-01-11	NORFOLK SOUTHERN		
DRAWN BY: RSD 09-01-11	OFFICE OF ASS'T. VICE PRESIDENT COMM. & SIGNAL, ATLANTA, GA.	M.P.:	50.38W
CHECKED BY: SAH 09-01-11	BARTELSO, IL GATES/FLS AT CR1700E (PELICAN RD.)		
IN SERVICE: - -	PROFILE 7C	FILE No.	R-
	CADD or DWG. No. SE9167P.17	SHEET No.	17 of 22

REVISION INITIALS											PROPERTY NORFOLK SOUTHERN RAILWAY CO.

NOTE: IF THE FARADAY SHIELD WOULD EVER NEED TO BE DRILLED IN THE FIELD, PROPER PRECAUTIONS MUST BE TAKEN TO INSURE METAL SHAVINGS DO NOT GET INTO EXISTING TERMINALS/WIRES.

AREA BELOW IS SCALED WITH AS=.75

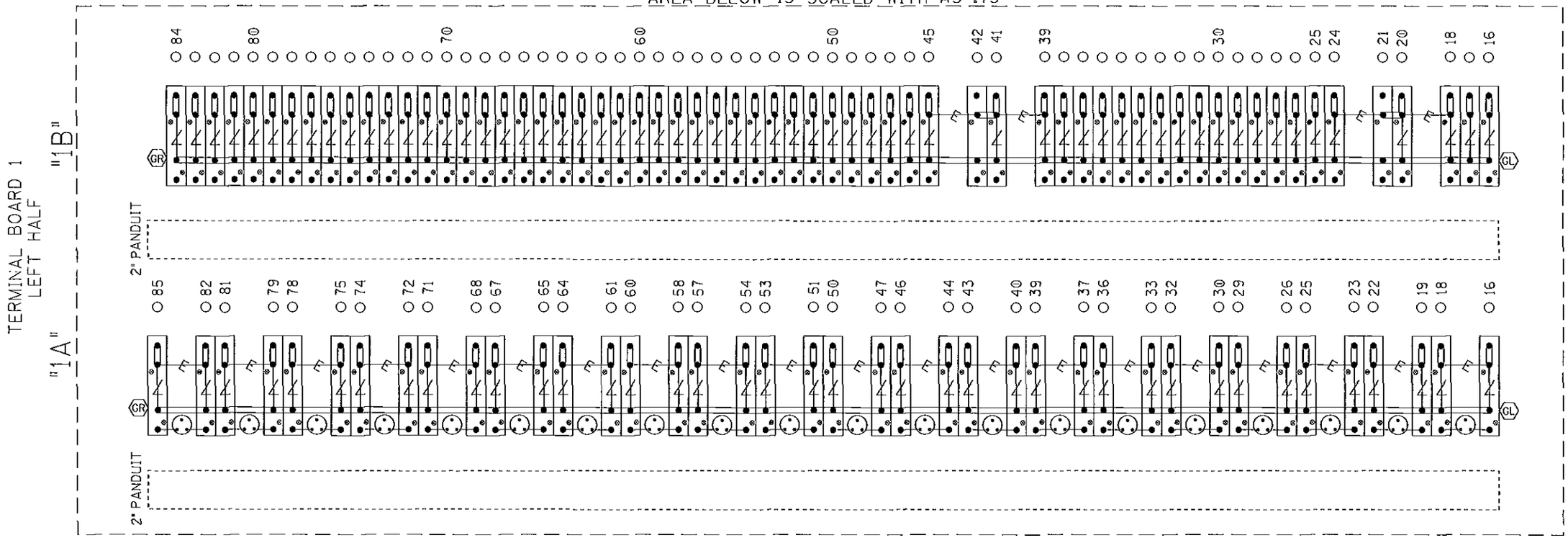

= Heavy Duty Equalizer (022700-1X)

Clearview = Lightning Arrester (022585-1X)

= LPC-10560-51

TERMINAL BOARD 1
LEFT TWO ROWS
FARADAY SHIELD DETAIL - 1A & 1B

= INDICATES PLACEMENT OF PANDUIT

THIS SHEET IS FOR REFERENCE ONLY, TO REFLECT HOW THE FARADAY SHIELD IS PREDRILLED. ONLY INSTALL AND USE THE TERMINALS NEEDED.

GR / GL = TERMINALS GROUNDED TO SHIELD.
4 POST BLOCKS USE EITHER -
GR - SERMMI PART NO. 61278
GL - SERMMI PART NO. 61278-1.

DESIGNED BY: TAH 09-01-11	NORFOLK SOUTHERN		
DRAWN BY: RSD 09-01-11	OFFICE OF ASS'T. VICE PRESIDENT COMM. & SIGNAL, ATLANTA, GA.	M.P.:	50.38W
CHECKED BY: SAH 09-01-11	BARTELSO, IL GATES/FLS AT CR1700E (PELICAN RD.)		
IN SERVICE: - -	PROFILE 7C	FILE No.	R-
	CADD or DWG. No. SE9167P.18	SHEET No.	18 of 22

REVISION INITIALS										

PROPERTY
NORFOLK SOUTHERN RAILWAY CO.

NOTE: IF THE FARADAY SHIELD WOULD EVER NEED TO BE DRILLED IN THE FIELD, PROPER PRECAUTIONS MUST BE TAKEN TO INSURE METAL SHAVINGS DO NOT GET INTO EXISTING TERMINALS/WIRES.

AREA BELOW IS SCALED WITH AS=.75

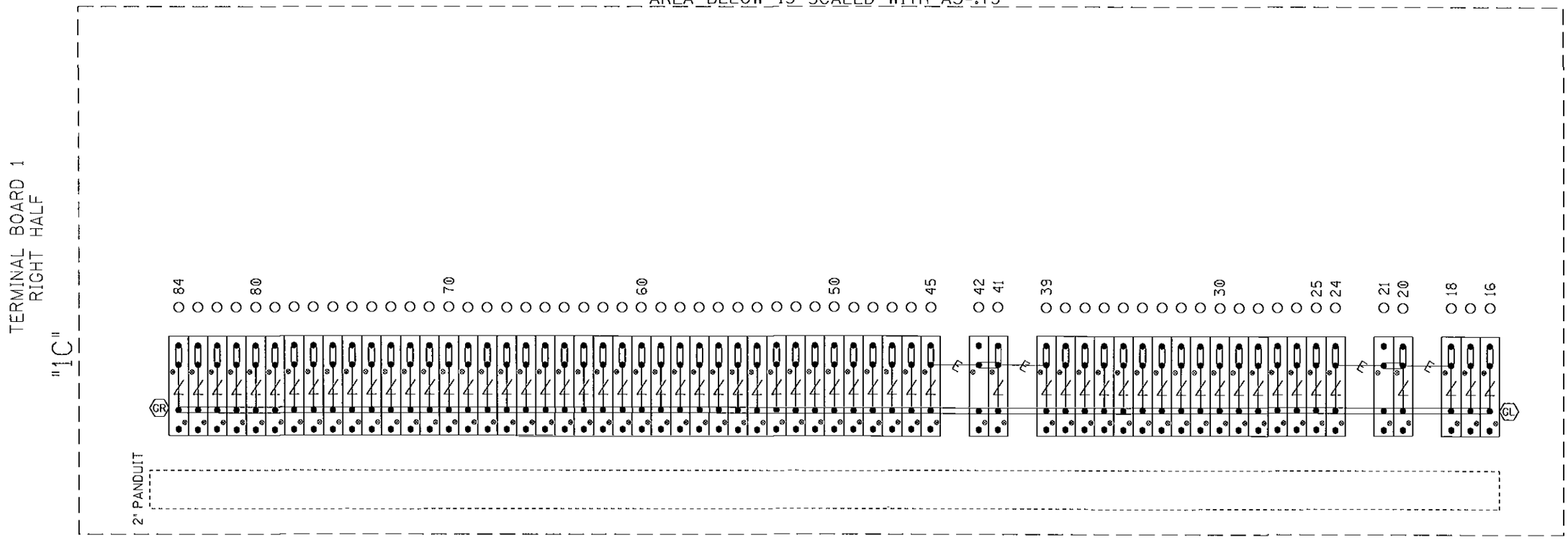

= Heavy Duty Equalizer (022700-1X)

= Clearview Lightning Arrester (022585-1X)

= LPC-10560-51

TERMINAL BOARD 1
RIGHT ROW
FARADAY SHIELD DETAIL - 1C

= INDICATES PLACEMENT OF PANDUIT

THIS SHEET IS FOR REFERENCE ONLY, TO REFLECT HOW THE FARADAY SHIELD IS PREDRILLED. ONLY INSTALL AND USE THE TERMINALS NEEDED.

GR / GL = TERMINALS GROUNDED TO SHIELD. 4 POST BLOCKS USE EITHER - GR - SERMMI PART NO. 61278 GL - SERMMI PART NO. 61278-1.

DESIGNED BY: TAH 09-01-11	NORFOLK SOUTHERN		
DRAWN BY: RSD 09-01-11	OFFICE OF ASS'T. VICE PRESIDENT COMM. & SIGNAL, ATLANTA, GA.	M.P.:	50.38W
CHECKED BY: SAH 09-01-11	BARTELSO, IL GATES/FLS AT CR1700E (PELICAN RD.)		
	PROFILE 7C	FILE No.	R-
IN SERVICE: - -	CADD or DWG. No. SE9167P.19	SHEET No.	19 of 22

REVISION INITIALS										

PROPERTY
NORFOLK SOUTHERN RAILWAY CO.

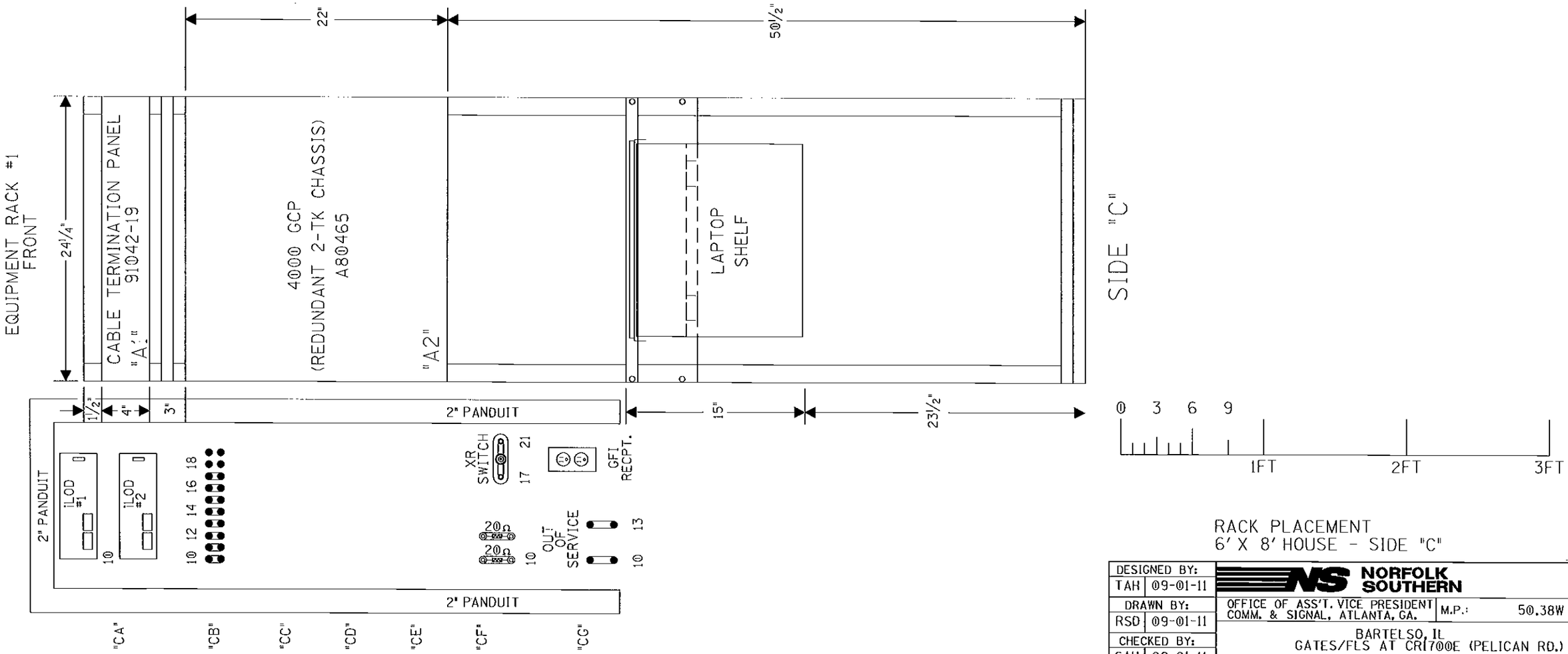

RACK PLACEMENT
6' X 8' HOUSE - SIDE "C"

DESIGNED BY: TAH 09-01-11	NORFOLK SOUTHERN		
DRAWN BY: RSD 09-01-11	OFFICE OF ASS'T. VICE PRESIDENT COMM. & SIGNAL, ATLANTA, GA.	M.P.:	50.38W
CHECKED BY: SAH 09-01-11	BARTELSO, IL GATES/FLS AT CR1700E (PELICAN RD.)		
IN SERVICE: - -	PROFILE 7C	FILE No.	R-
	CADD or DWG. No. SE9167P.20	SHEET No.	20 of 22

REVISION INITIALS

PROPERTY
NORFOLK SOUTHERN RAILWAY CO.

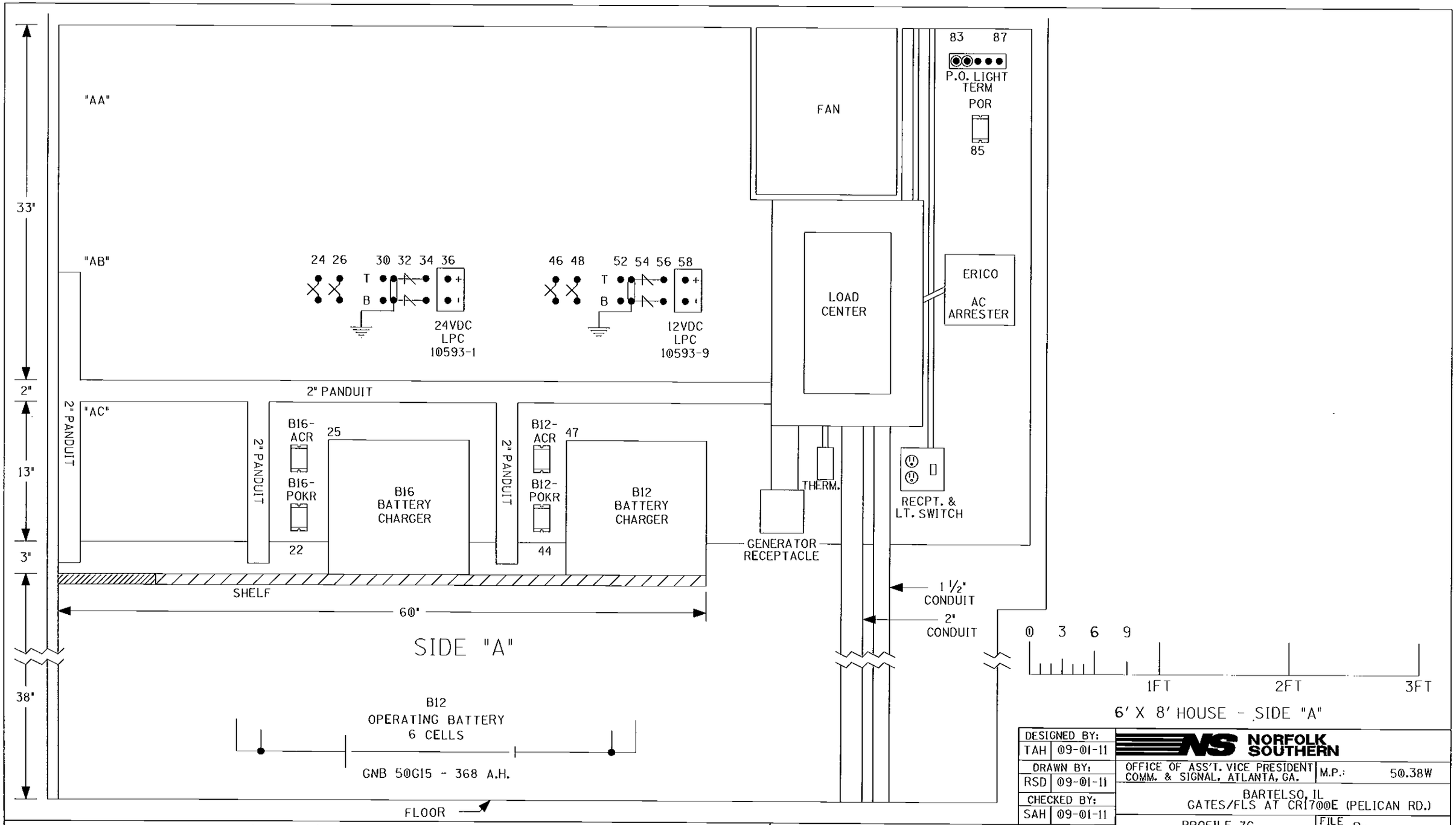

DESIGNED BY: TAH 09-01-11	NORFOLK SOUTHERN		
DRAWN BY: RSD 09-01-11	OFFICE OF ASS'T. VICE PRESIDENT COMM. & SIGNAL, ATLANTA, GA.	M.P.:	50.38W
CHECKED BY: SAH 09-01-11	BARTELSO, IL GATES/FLS AT CR1700E (PELICAN RD.)		
IN SERVICE: - -	PROFILE 7C	FILE No.	R-
	CADD or DWG. No. SE9167P.21	SHEET No.	21 of 22

REVISION INITIALS

PROPERTY
NORFOLK SOUTHERN RAILWAY CO.

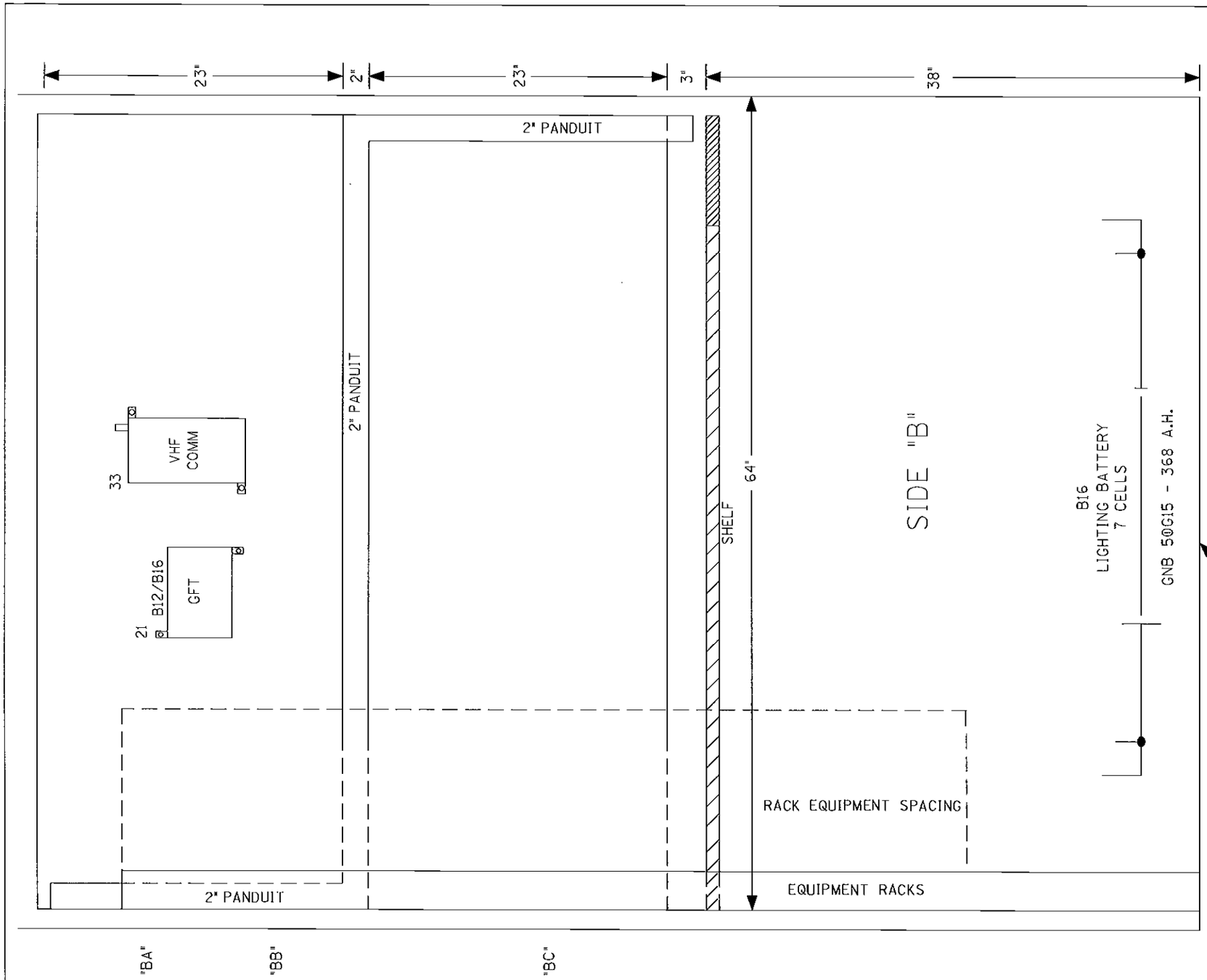

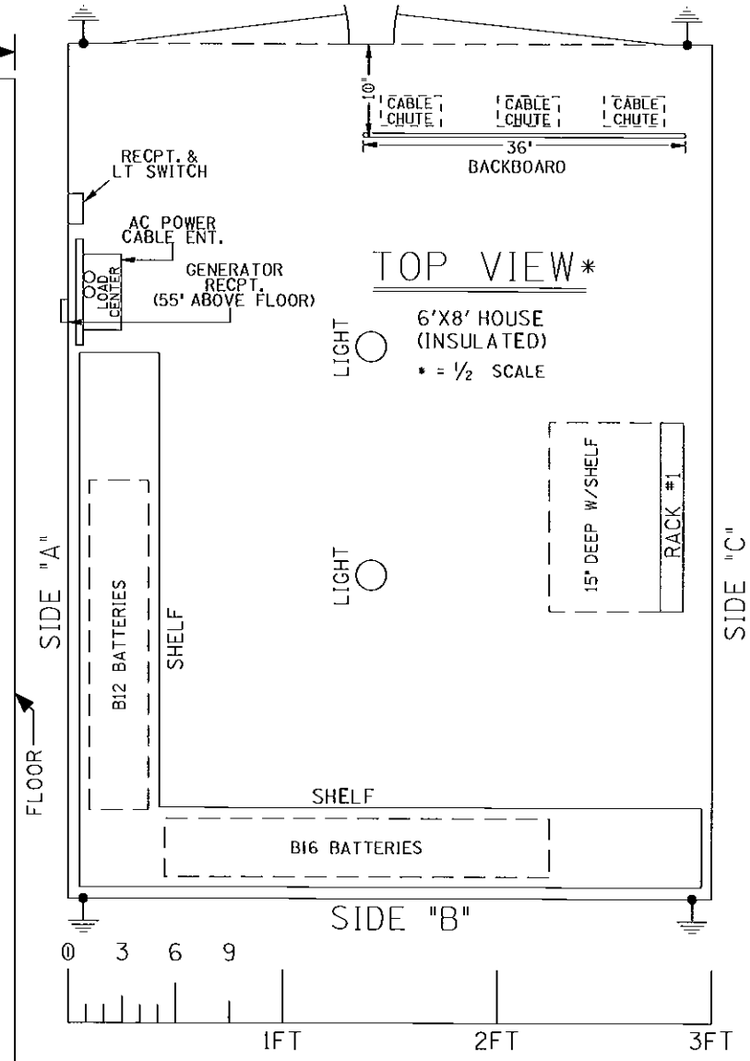

6' X 8' HOUSE (SIDE "B" & TOP VIEW)

DESIGNED BY: TAH 09-01-11	NORFOLK SOUTHERN		
DRAWN BY: RSD 09-01-11	OFFICE OF ASS'T. VICE PRESIDENT COMM. & SIGNAL, ATLANTA, GA.	M.P.:	50.38W
CHECKED BY: SAH 09-01-11	BARTELSO, IL GATES/FLS AT CR1700E (PELICAN RD.)		
IN SERVICE: - -	PROFILE 7C	FILE No.	R-
	CADD or DWG. No. SE9167P.22	SHEET No.	22 of 22

REVISION INITIALS

PROPERTY
NORFOLK SOUTHERN RAILWAY CO.